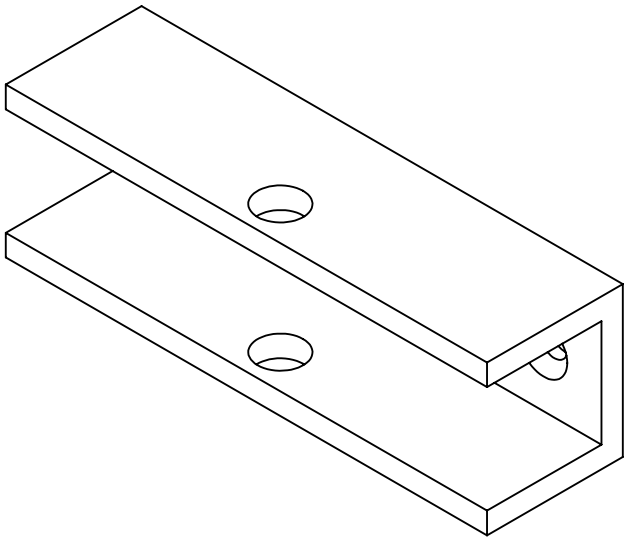

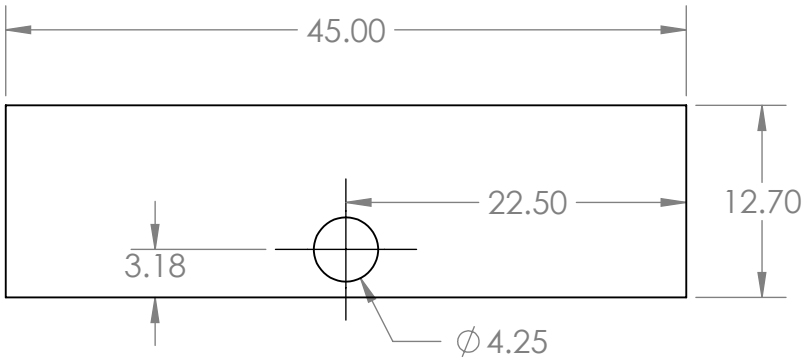


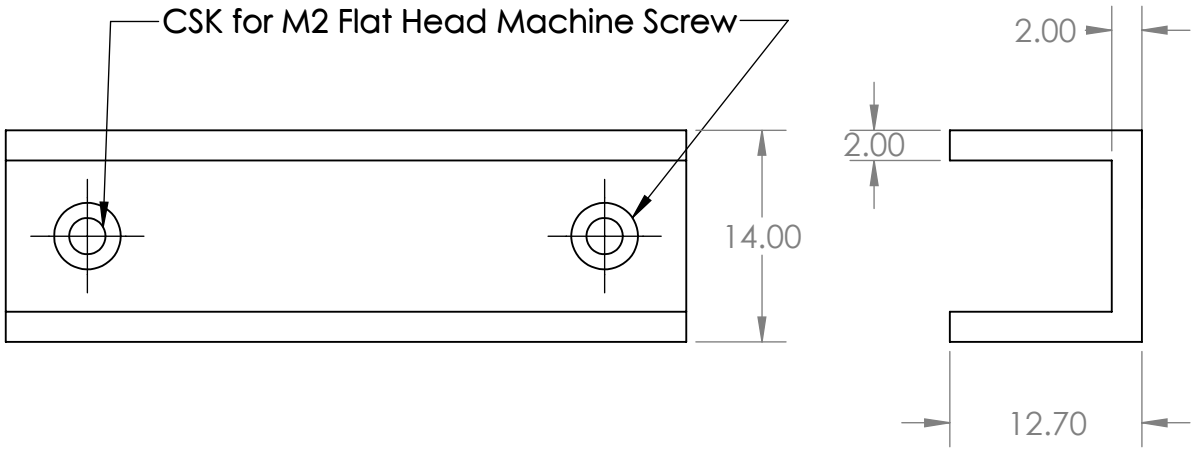


| | | | | | | | |
|---|---|---|---|---|---|---|---|
| UNLESS OTHERWISE SPECIFIED:<br>DIMENSIONS ARE IN MILLIMETERS<br>SURFACE FINISH:<br>TOLERANCES:<br>LINEAR:<br>ANGULAR: | FINISH: | | | DEBURR AND BREAK SHARP EDGES | DO NOT SCALE DRAWING | | REVISION |
| | NAME | SIGNATURE | DATE | | | | TITLE: |
| DRAWN | | | | | | | |
| CHK'D | | | | | | | |
| APPV'D | | | | | | | |
| MFG | | | | | | | |
| Q.A | | | | MATERIAL: | | DWG NO. DoorBracket | A4 |
| | | | | WEIGHT: | | SCALE:2:1 | SHEET 1 OF 1 |

SOLIDWORKS Educational Product. For Instructional Use Only.