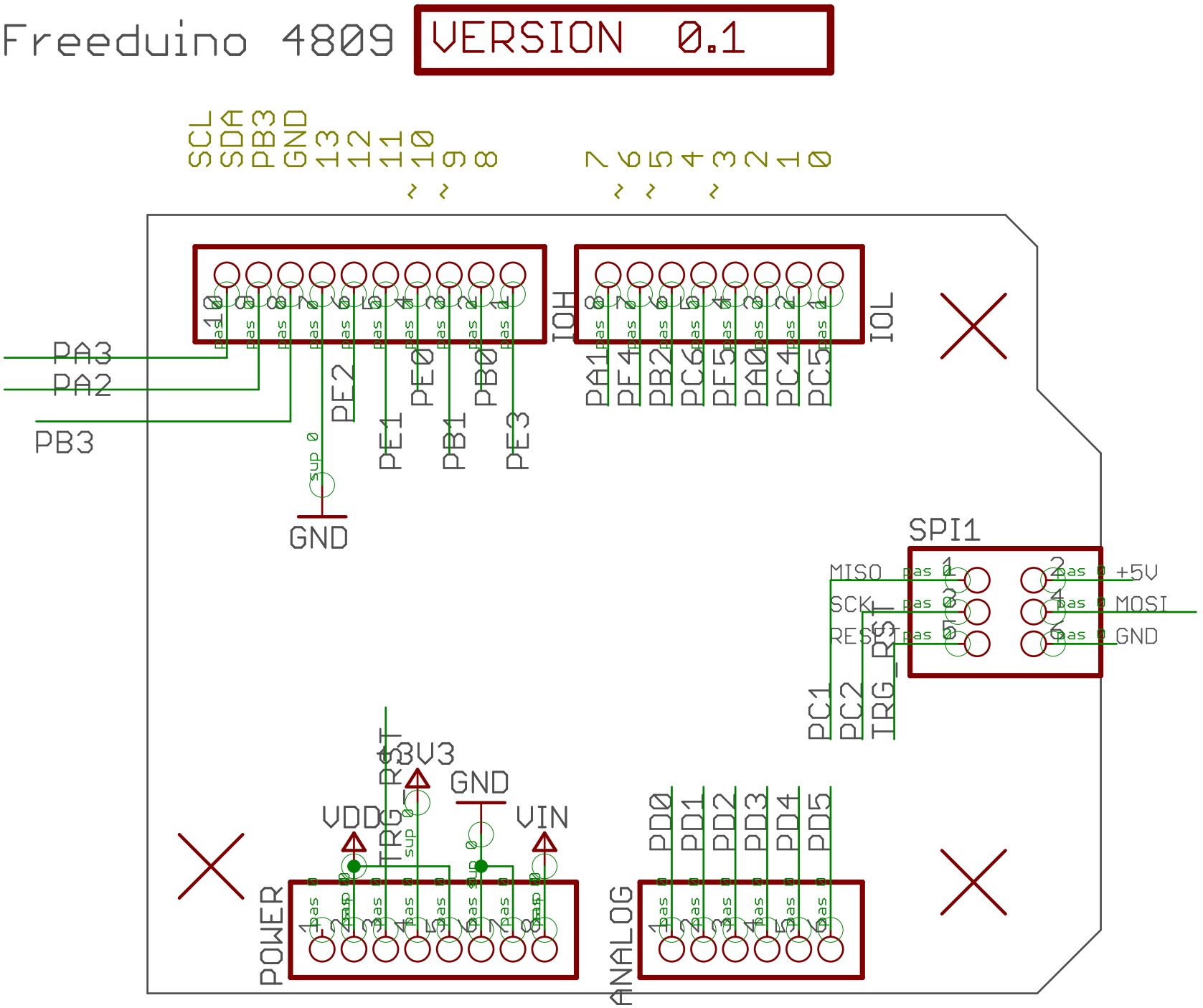
Freeduino 4809
VERSION 0.1
SCL
SDA
PB3
GND
13
12
11
10
9
8
7
6
5
4
3
2
1
0
IOH
IOL
PA3
PA2
PB3
PE2
PE1
PE0
PB1
PB0
PE3
PA1
PF4
PB2
PC6
PF5
PA0
PC4
PC5
GND
SPI1
MISO
SCK
RESET
+5V
MOSI
GND
PC1
PC2
IRG_RST
RST
3V3
GND
VDD
VIN
POWER
PD0
PD1
PD2
PD3
PD4
PD5
ANALOG

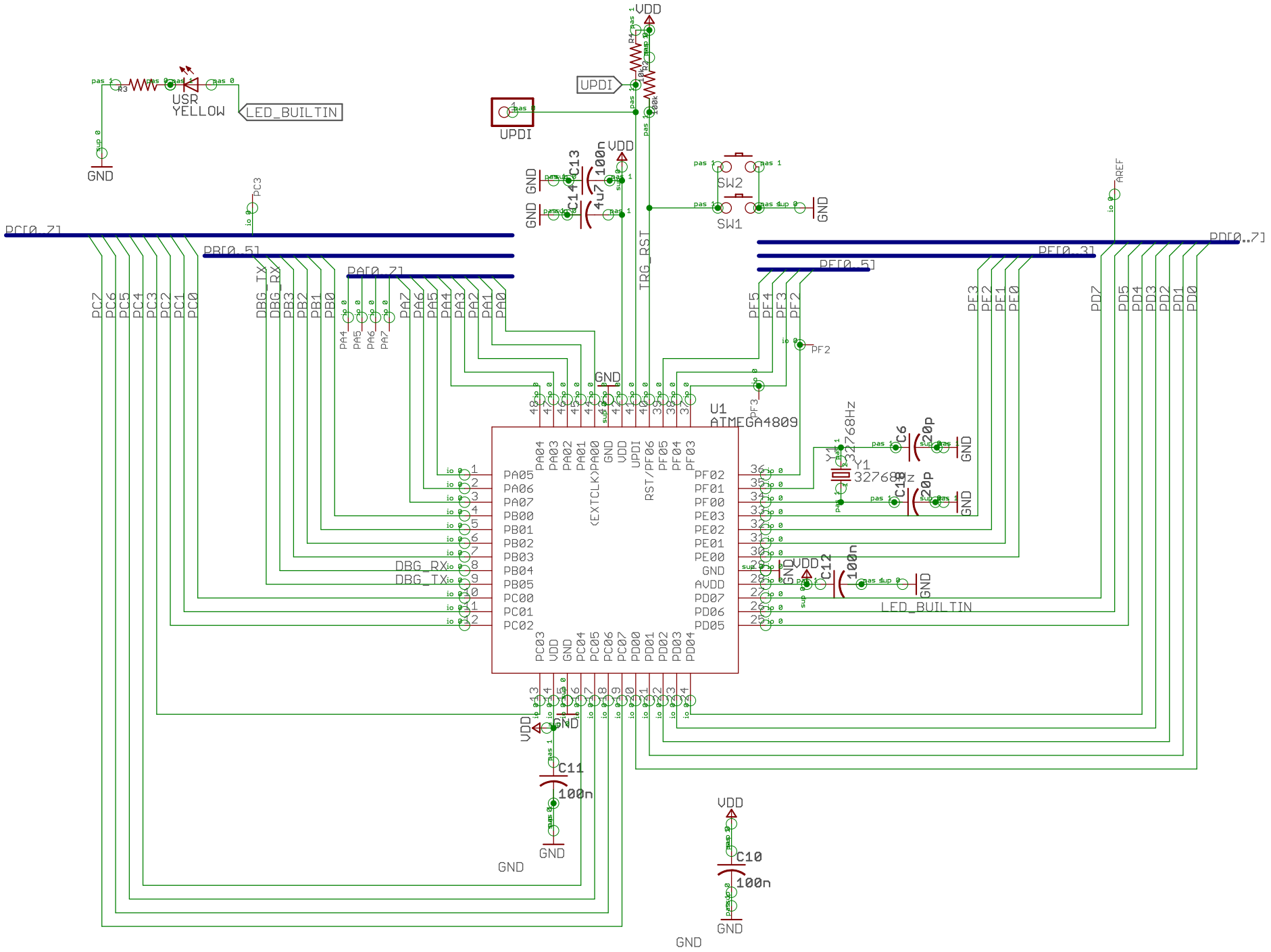

VDD
UPDI
R1
R2
100k
R3
USR
YELLOW
LED_BUILTIN
GND
C13
100n
C14
4u7
SW2
SW1
TRG_RST
PC[0..7]
PB[0..5]
PA[0..7]
PF[0..5]
PF[0..3]
PD[0..7]
AREF
PC3
PC7
PC6
PC5
PC4
PC3
PC2
PC1
PC0
DBG_TX
DBG_RX
PB3
PB2
PB1
PB0
PA4
PA5
PA6
PA7
PA7
PA6
PA5
PA4
PA3
PA2
PA1
PA0
PF5
PF4
PF3
PF2
PF3
PF2
PF1
PF0
PD7
PD5
PD4
PD3
PD2
PD1
PD0
PF2
U1
ATMEGA4809
PA04
PA03
PA02
PA01
PA00
GND
VDD
UPDI
RST/PF06
PF05
PF04
PF03
PA05
PA06
PA07
PB00
PB01
PB02
PB03
PB04
PB05
PC00
PC01
PC02
(EXTCLK)
PF02
PF01
PF00
PE03
PE02
PE01
PE00
GND
AVDD
PD07
PD06
PD05
PC03
VDD
GND
PC04
PC05
PC06
PC07
PD00
PD01
PD02
PD03
PD04
Y1
32768Hz
C6
20p
C11
20p
C12
100n
C11
100n
C10
100n

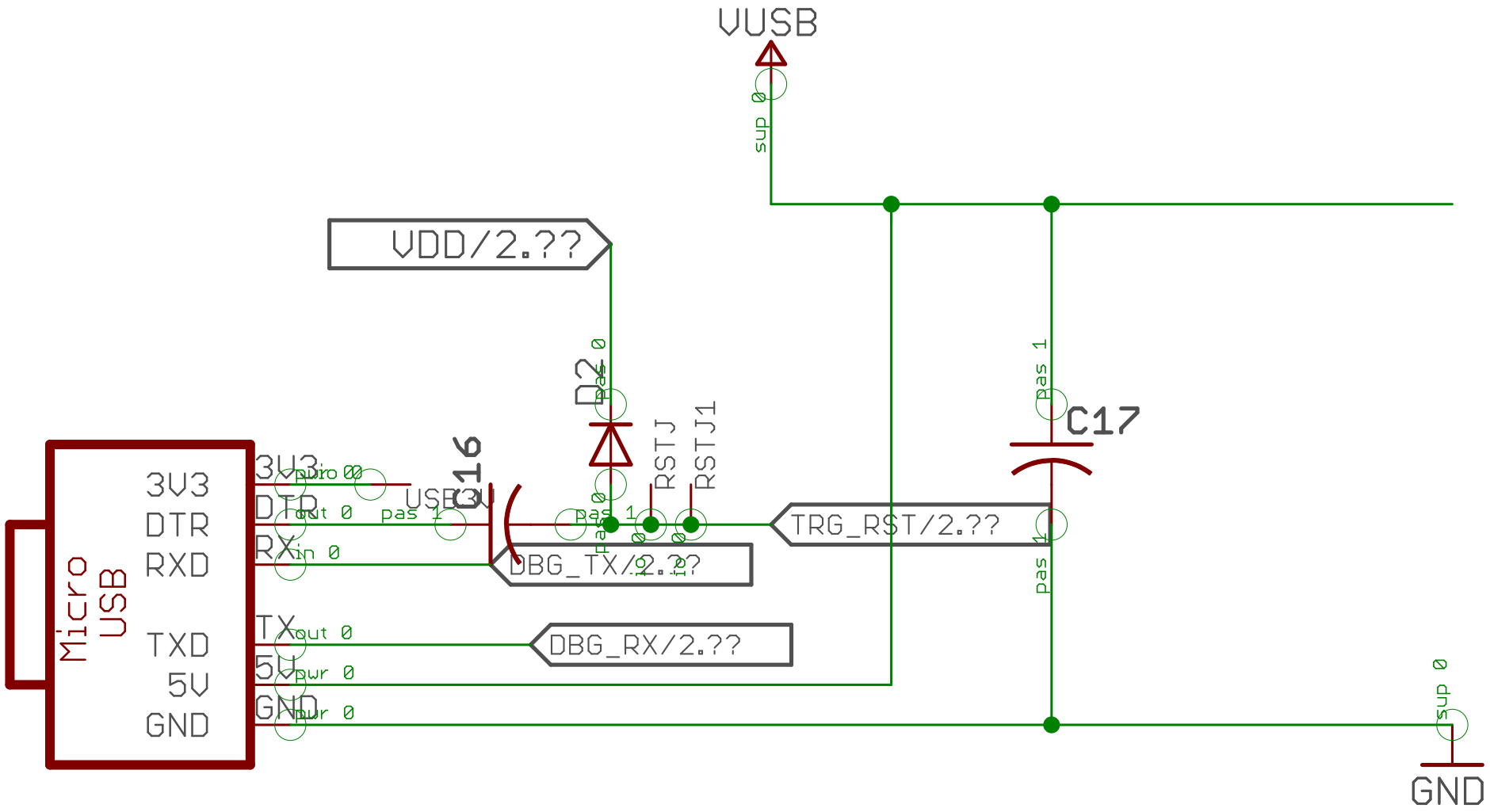

USB Connectivity

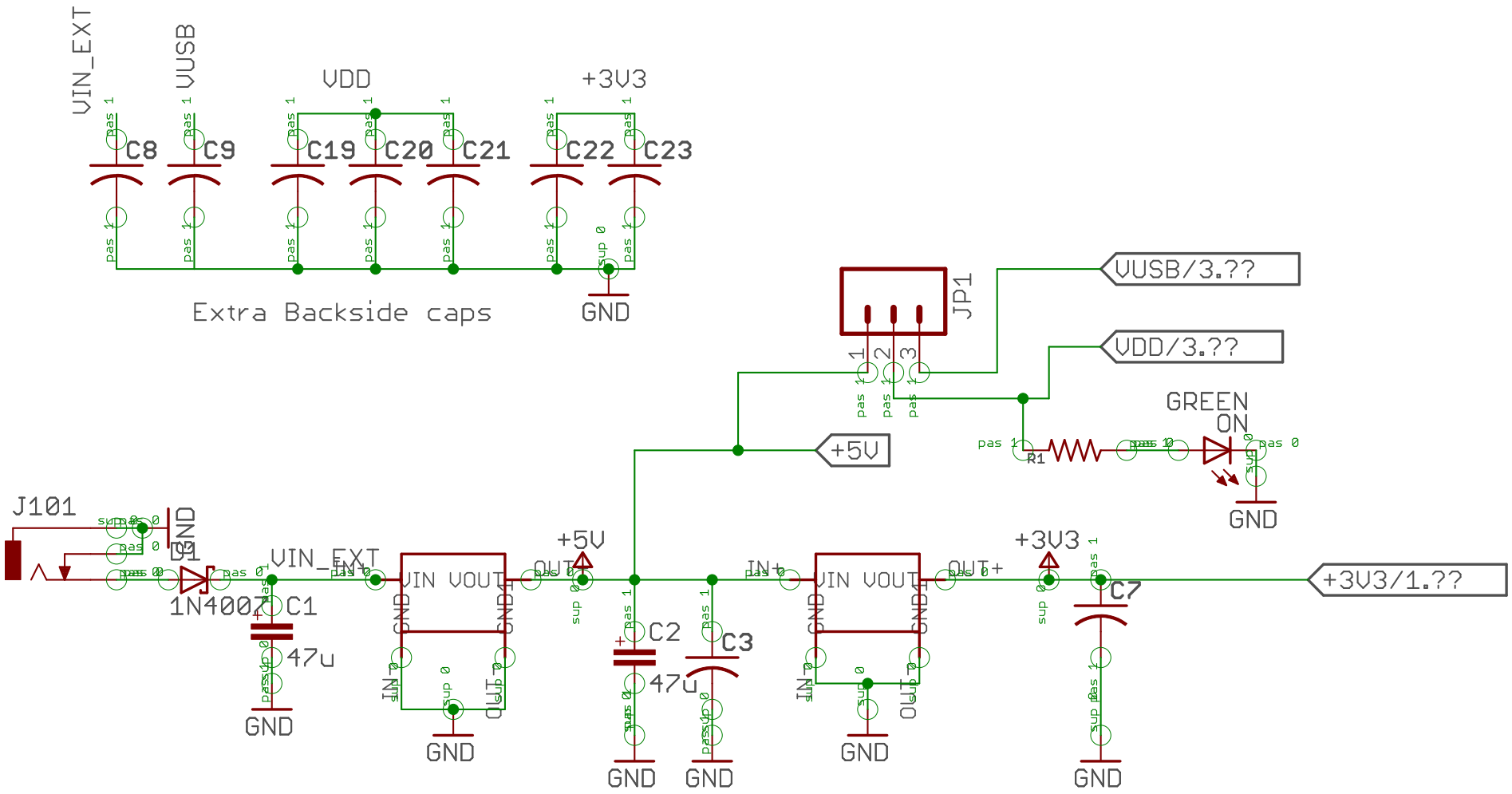
VIN_EXT
VUSB
VDD
+3V3
C8
C9
C19
C20
C21
C22
C23
Extra Backside caps
GND
JP1
VUSB/3.??
VDD/3.??
GREEN
ON
R1
+5V
J101
D1
1N4007
VIN_EXT
C1
47u
VIN VOUT
GND
+5V
C2
47u
C3
IN+
OUT+
+3V3
C7
+3V3/1.??