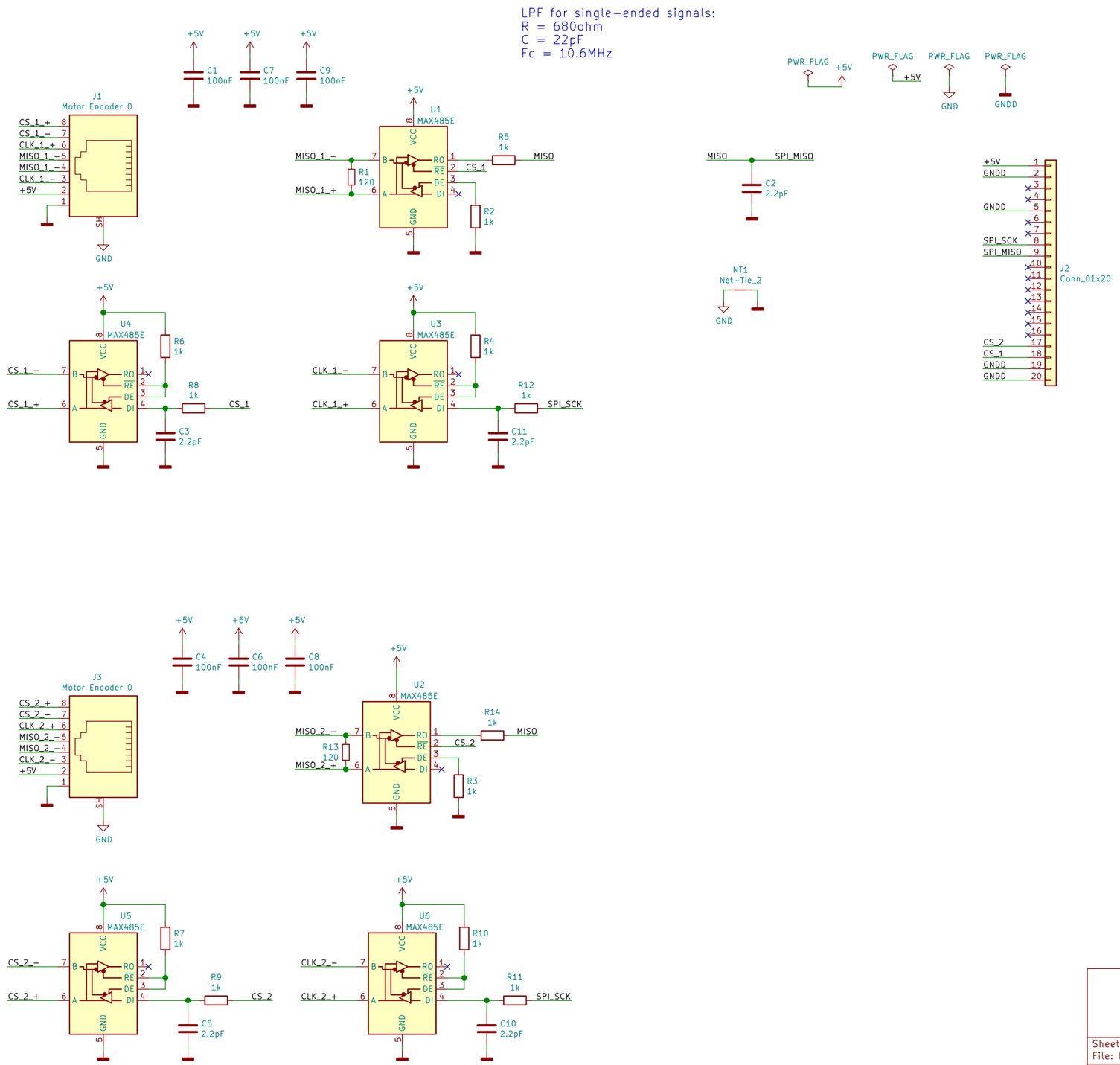

Sheet: /
File: DifferentialSPIMaster.sch

Title: Differential SPI Encoder Master

Size: B	Date: 2019-11-06	Rev: 2
KiCad E.D.A. kicad (5.1.4)-1		Id: 1/1