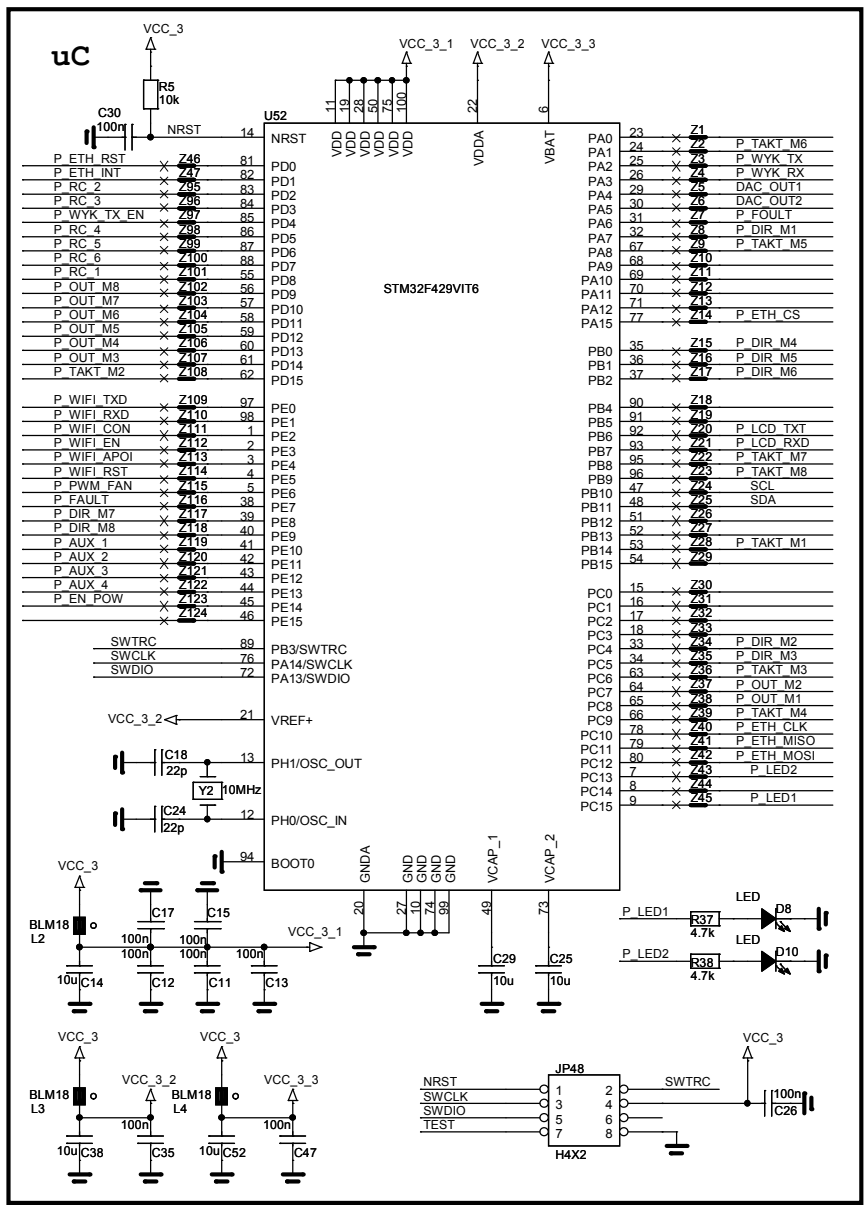
uC
U52
STM32F429VIT6
VCC_3
VCC_3_1
VCC_3_2
VCC_3_3
R5 10k
C30 100n
NRST
VDD
VDDA
VBAT
P_ETH_RST
P_ETH_INT
P_RC_2
P_RC_3
P_WYK_TX_EN
P_RC_4
P_RC_5
P_RC_6
P_RC_1
P_OUT_M8
P_OUT_M7
P_OUT_M6
P_OUT_M5
P_OUT_M4
P_OUT_M3
P_TAKT_M2
P_WIFI_TXD
P_WIFI_RXD
P_WIFI_CON
P_WIFI_EN
P_WIFI_APOI
P_WIFI_RST
P_PWM_FAN
P_FAULT
P_DIR_M7
P_DIR_M8
P_AUX_1
P_AUX_2
P_AUX_3
P_AUX_4
P_EN_POW
SWTRC
SWCLK
SWDIO
PB3/SWTRC
PA14/SWCLK
PA13/SWDIO
VREF+
PH1/OSC_OUT
PH0/OSC_IN
BOOT0
GNDA
VCAP_1
VCAP_2
P_TAKT_M6
P_WYK_TX
P_WYK_RX
DAC_OUT1
DAC_OUT2
P_FOULT
P_DIR_M1
P_TAKT_M5
P_ETH_CS
P_DIR_M4
P_DIR_M5
P_DIR_M6
P_LCD_TXT
P_LCD_RXD
P_TAKT_M7
P_TAKT_M8
SCL
SDA
P_TAKT_M1
P_DIR_M2
P_DIR_M3
P_TAKT_M3
P_OUT_M2
P_OUT_M1
P_TAKT_M4
P_ETH_CLK
P_ETH_MISO
P_ETH_MOSI
P_LED2
P_LED1
C18 22p
Y2 10MHz
C24 22p
BLM18 L2
BLM18 L3
BLM18 L4
P_LED1
P_LED2
R37 4.7k
R38 4.7k
LED
D8
D10
JP48
NRST
SWCLK
SWDIO
TEST
SWTRC
H4X2
C26 100n

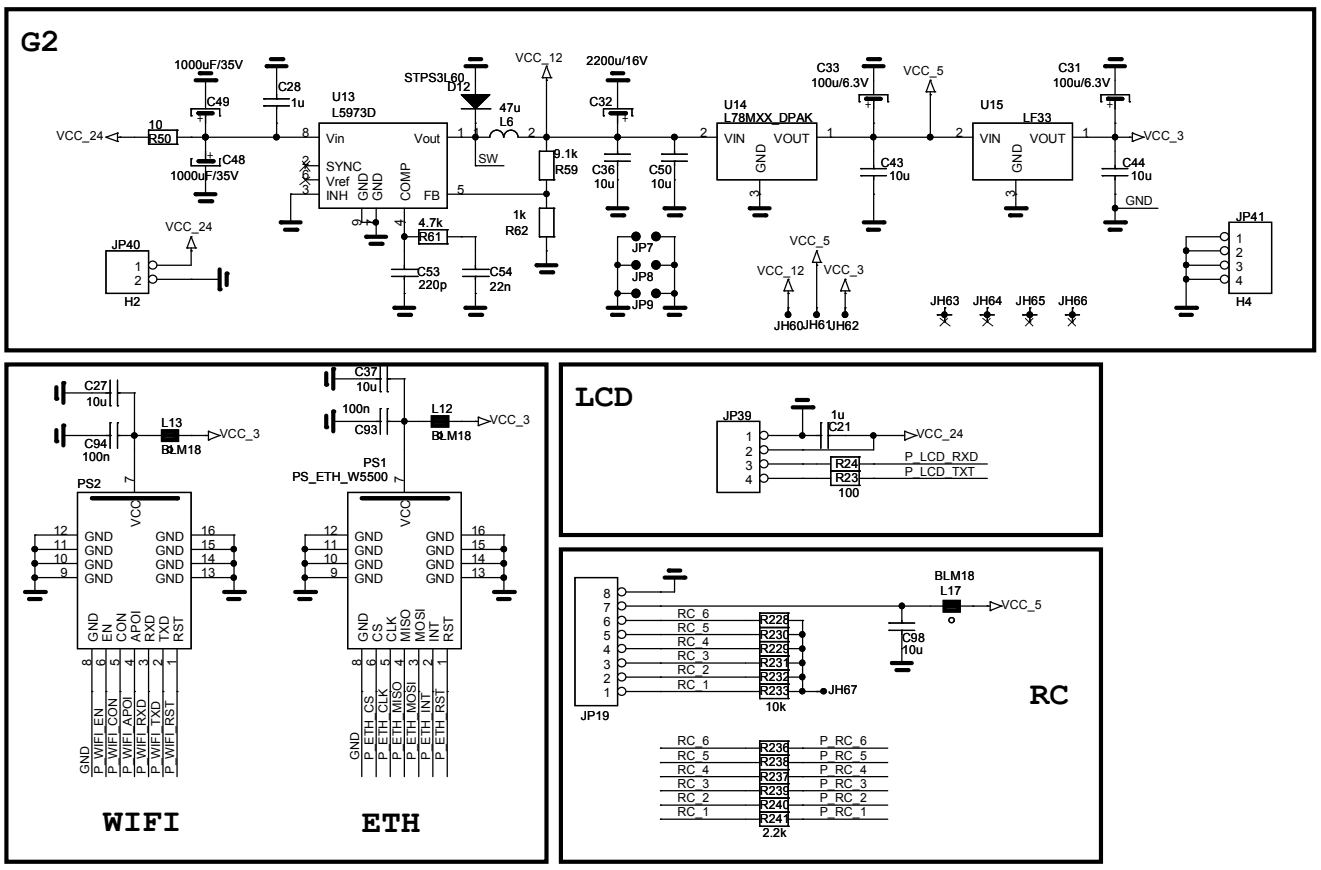
G2
U13 L5973D
STPS3L60 D12
U14 L78MXX_DPAK
U15 LF33
VCC_24
VCC_12
VCC_5
VCC_3
1000uF/35V C49
C48 1000uF/35V
C28 1u
R50 10
47u L6
2200u/16V C32
C33 100u/6.3V
C31 100u/6.3V
C43 10u
C44 10u
C36 10u
C50 10u
9.1k R59
1k R62
4.7k R61
C53 220p
C54 22n
JP40
H2
JP7
JP8
JP9
JP41
H4
JH60
JH61
JH62
JH63
JH64
JH65
JH66

WIFI
ETH
PS2
PS1 PS_ETH_W5500
C27 10u
C94 100n
L13 BLM18
C37 10u
C93 100n
L12 BLM18
VCC_3
GND
EN
CON
APOI
RXD
TXD
RST
CS
CLK
MISO
MOSI
INT
P_WIFI_EN
P_WIFI_CON
P_WIFI_APOI
P_WIFI_RXD
P_WIFI_TXD
P_WIFI_RST
P_ETH_CS
P_ETH_CLK
P_ETH_MISO
P_ETH_MOSI
P_ETH_INT
P_ETH_RST

LCD
JP39
C21 1u
VCC_24
P_LCD_RXD
P_LCD_TXT
R24
R23
100
RC
JP19
BLM18 L17
VCC_5
C98 10u
RC_6
RC_5
RC_4
RC_3
RC_2
RC_1
R228
R230
R229
R231
R232
R233
10k
JH67
R236
R238
R237
R239
R240
R241
2.2k
P_RC_6
P_RC_5
P_RC_4
P_RC_3
P_RC_2
P_RC_1

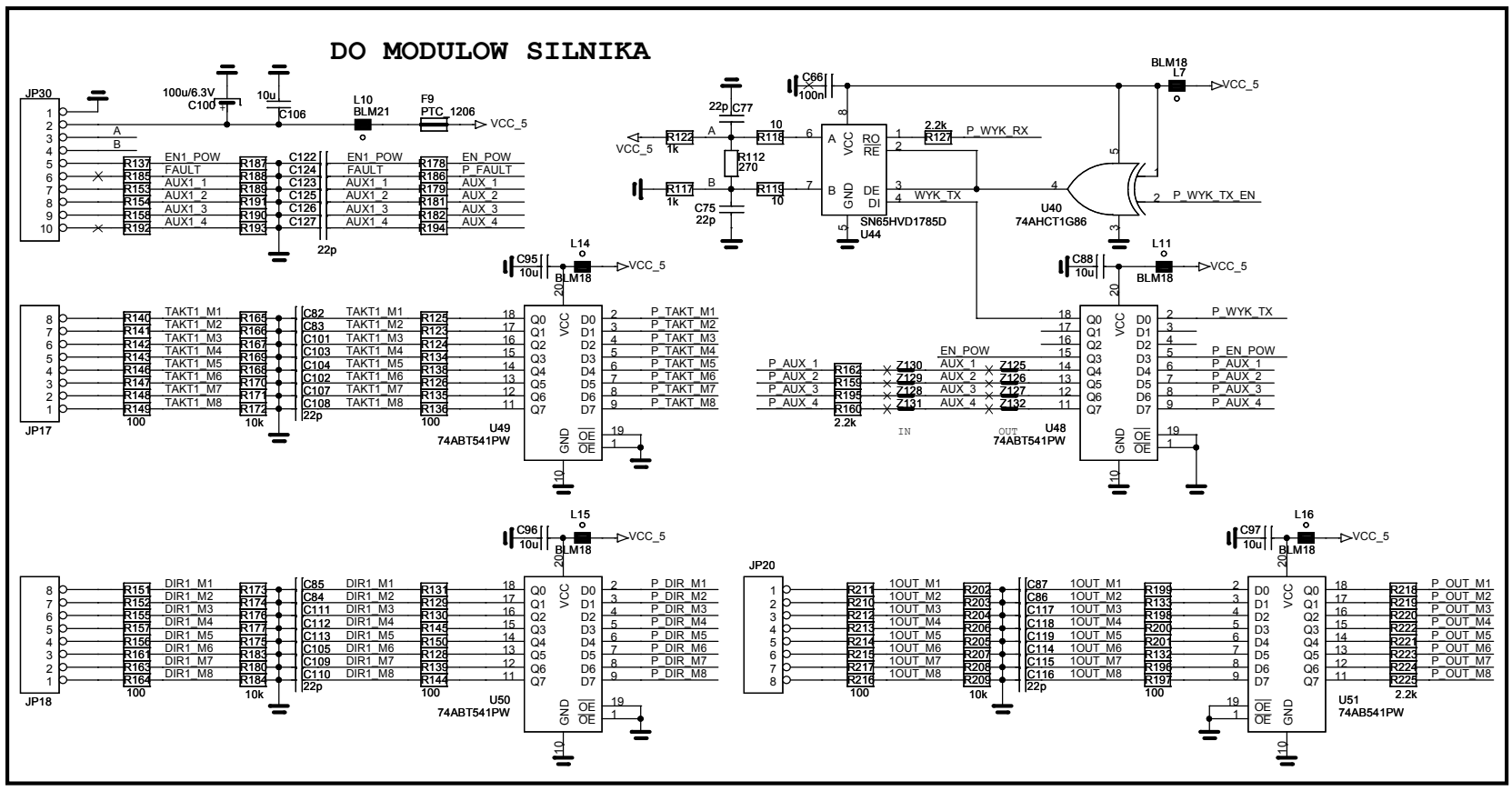
DO MODULOW SILNIKA
JP30
JP17
JP18
JP20
U49 74ABT541PW
U50 74ABT541PW
U48 74ABT541PW
U51 74AB541PW
U40 74AHCT1G86
U44 SN65HVD1785D
L10 BLM21
F9 PTC_1206
C100 100u/6.3V
C106 10u
C66 100n
L7 BLM18
L14 BLM18
L11 BLM18
L15 BLM18
L16 BLM18
VCC_5
EN1_POW
FAULT
AUX1_1
AUX1_2
AUX1_3
AUX1_4
P_FAULT
P_WYK_RX
P_WYK_TX
P_WYK_TX_EN
TAKT1_M1
TAKT1_M2
TAKT1_M3
TAKT1_M4
TAKT1_M5
TAKT1_M6
TAKT1_M7
TAKT1_M8
P_TAKT_M1
P_TAKT_M2
P_TAKT_M3
P_TAKT_M4
P_TAKT_M5
P_TAKT_M6
P_TAKT_M7
P_TAKT_M8
P_AUX_1
P_AUX_2
P_AUX_3
P_AUX_4
P_EN_POW
DIR1_M1
DIR1_M2
DIR1_M3
DIR1_M4
DIR1_M5
DIR1_M6
DIR1_M7
DIR1_M8
P_DIR_M1
P_DIR_M2
P_DIR_M3
P_DIR_M4
P_DIR_M5
P_DIR_M6
P_DIR_M7
P_DIR_M8
1OUT_M1
1OUT_M2
1OUT_M3
1OUT_M4
1OUT_M5
1OUT_M6
1OUT_M7
1OUT_M8
P_OUT_M1
P_OUT_M2
P_OUT_M3
P_OUT_M4
P_OUT_M5
P_OUT_M6
P_OUT_M7
P_OUT_M8
R122 1k
R117 1k
R112 270
C77 22p
C75 22p
R118 10
R119 10
R127 2.2k
R162 2.2k
R218 2.2k
R225 2.2k
R140 100
R149 100
R164 100
R172 10k
R184 10k
C82 22p
C108 22p
C110 22p
C87 22p
C116 22p
C95 10u
C96 10u
C97 10u
C88 10u