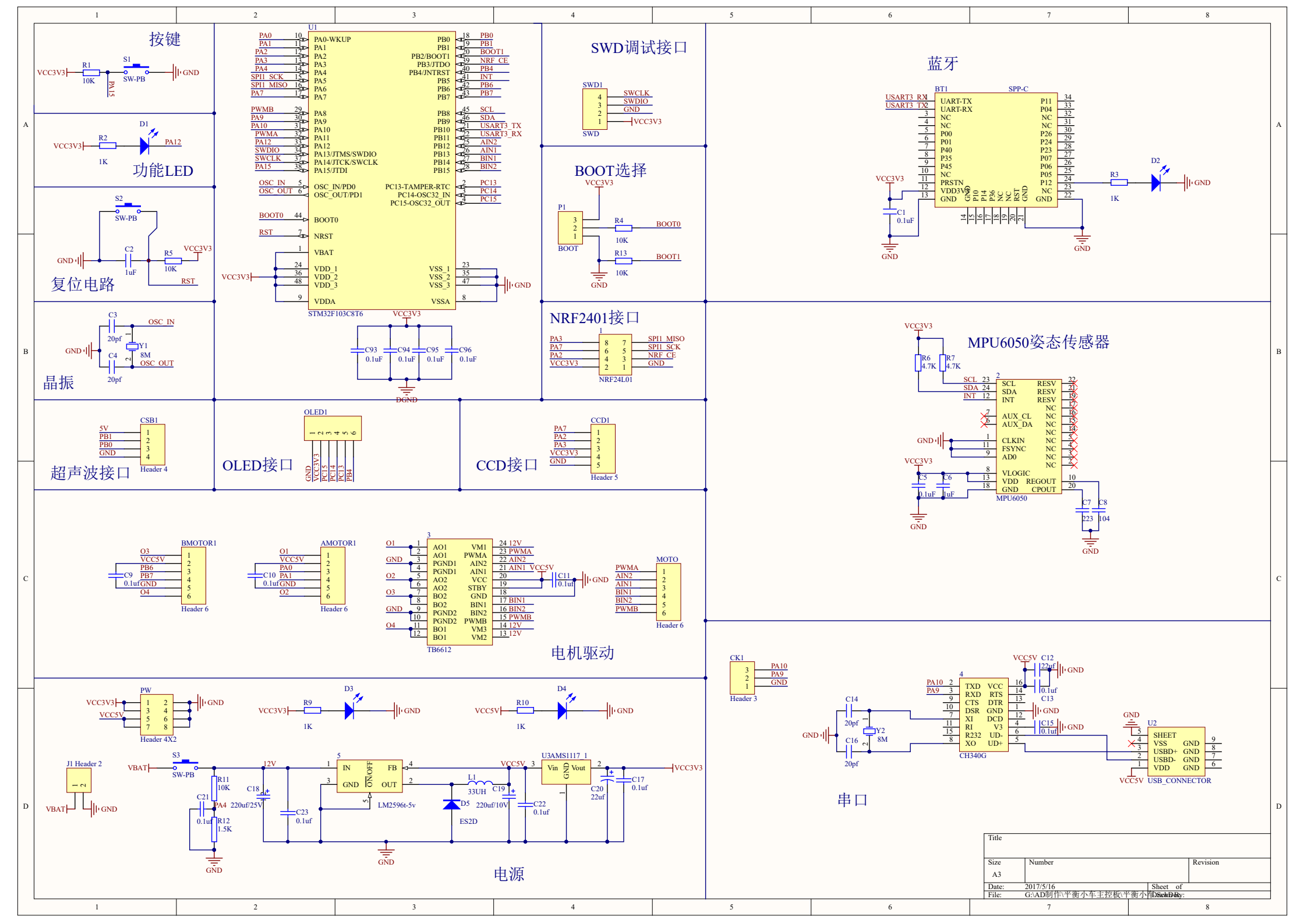
按键
S1
SW-PB
R1
10K
PA15
VCC3V3
GND
功能LED
D1
R2
1K
PA12
复位电路
S2
SW-PB
C2
1uF
R5
10K
RST
晶振
Y1
8M
C3
20pf
C4
20pf
OSC_IN
OSC_OUT
超声波接口
CSB1
Header 4
OLED接口
OLED1
GND
VCC3V3
PC15
PC14
PC13
PB4
CCD接口
CCD1
Header 5
U1
STM32F103C8T6
PA0-WKUP
PA1
PA2
PA3
PA4
PA5
PA6
PA7
PB0
PB1
PB2/BOOT1
PB3/JTDO
PB4/JNTRST
PB5
PB6
PB7
PA8
PA9
PA10
PA11
PA12
PA13/JTMS/SWDIO
PA14/JTCK/SWCLK
PA15/JTDI
PB8
PB9
PB10
PB11
PB12
PB13
PB14
PB15
PC13-TAMPER-RTC
PC14-OSC32_IN
PC15-OSC32_OUT
OSC_IN/PD0
OSC_OUT/PD1
BOOT0
NRST
VBAT
VDD_1
VDD_2
VDD_3
VSS_1
VSS_2
VSS_3
VDDA
VSSA
C93
C94
C95
C96
0.1uF
DGND
SWD调试接口
SWD1
SWD
SWCLK
SWDIO
BOOT选择
P1
BOOT
R4
R13
10K
BOOT0
BOOT1
NRF2401接口
NRF24L01
SPI_MISO
SPI_SCK
NRF_CE
蓝牙
BT1
SPP-C
UART-TX
UART-RX
PRSTN
VDD3V3
R3
1K
D2
MPU6050姿态传感器
MPU6050
R6
R7
4.7K
AUX_CL
AUX_DA
CLKIN
FSYNC
AD0
VLOGIC
REGOUT
CPOUT
C5
C6
C7
C8
0.1uF
1uF
223
104
BMOTOR1
AMOTOR1
MOTO
Header 6
TB6612
AO1
AO2
BO1
BO2
PGND1
PGND2
VM1
VM2
AIN1
AIN2
BIN1
BIN2
PWMA
PWMB
STBY
VCC
电机驱动
CK1
Header 3
串口
CH340G
C12
22uf
C13
C14
C15
C16
20pf
Y2
8M
U2
USB_CONNECTOR
SHEET
VSS
USBD+
USBD-
VDD
PW
Header 4X2
D3
D4
R9
R10
1K
J1 Header 2
S3
VBAT
R11
10K
R12
1.5K
C18
C19
C20
C21
C22
C23
220uf/25V
220uf/10V
22uf
0.1uf
L1
33UH
D5
ES2D
LM2596t-5v
U3AMS1117_1
Vin
Vout
电源
Title
Size
A3
Number
Revision
Date:
2017/5/16
File:
G:\AD制作\平衡小车主控板\平衡小车主控板.SchDoc
Sheet of
Drawn By:

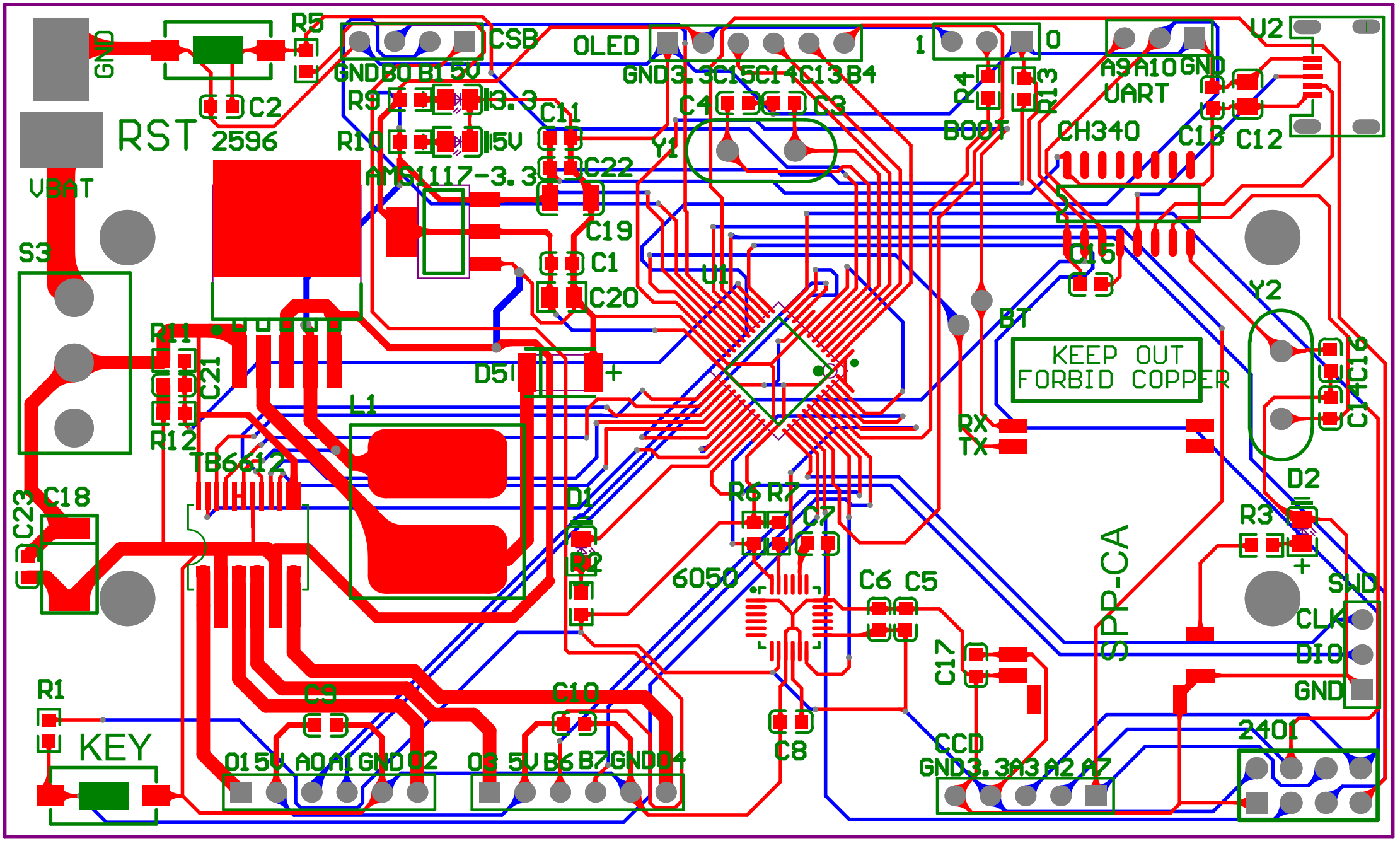
GND
R5
CSB
OLED
1
0
U2
C2
RST
2596
GNDB0 B1 5V
R9
3.3
R10
5V
C11
AMS1117-3.3
C22
GND3.3C15C14C13B4
C4
C3
Y1
BOOT
A9A10GND
UART
CH340
C13
C12
VBAT
S3
C19
C1
C20
U1
C15
Y2
R11
C21
R12
D5
L1
TB6612
BT
KEEP OUT
FORBID COPPER
RX
TX
C14C16
C23
C18
D1
R2
R6 R7
C7
6050
C6 C5
D2
R3
SWD
CLK
DIO
GND
SPP-CA
R1
KEY
C9
C10
C8
C17
2401
O1 5V A0 A1 GND O2
O3 5V B6 B7 GNDO4
CCD
GND3.3A3A2A7

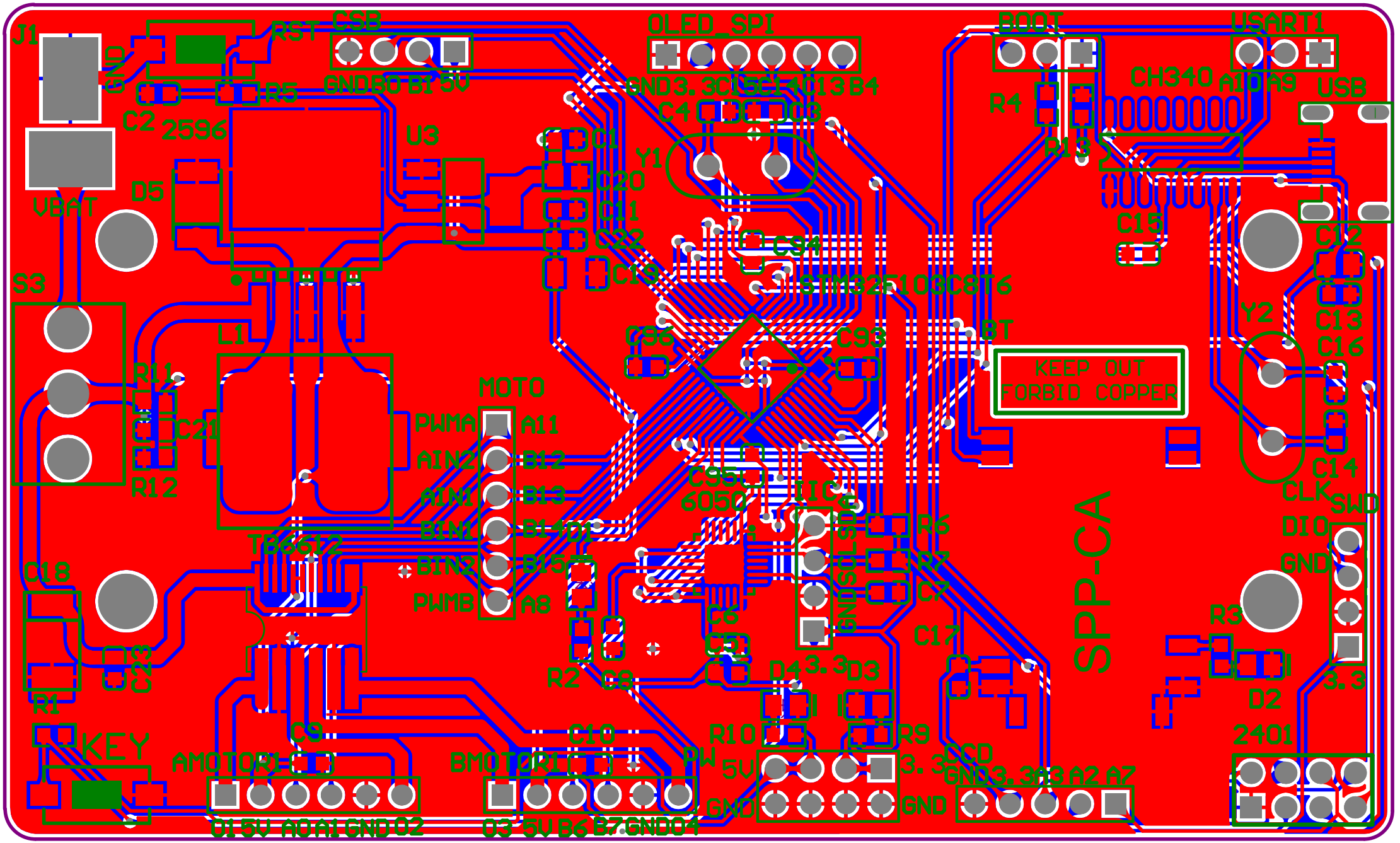

OLED_SPI
BOOT
USART1
CH340
USB
KEEP OUT
FORBID COPPER
MOTO
SPP-CA
KEY

Comment	Description	Designator	Footprint	LibRef	Quantity
NRF24L01	Header, 4-Pin, Dual row, Right Angle	1	LC-HDR2X4H	Header 4X2H	1
MPU6050	9轴运动处理传感器	2	LC-QFN-24_4x4x05P	MPU6050	1
TB6612		3	TB6612	TB6612	1
CH340G		4	SO-16	CH340G	1
LM2596t-5v	Simple Switcher 3A Step Down Voltage Regulator	5	LC-TO-263-5	LM2576	1
Header 6	Header, 6-Pin	AMOTOR1, BMOTOR1, MOTO, OLED1	HDR1X6	Header 6	4
SPP-C	sppc	BT1	SPP-C	SPP-C	1
	[NoValue], [NoValue], [NoValue], Capacitor, Capacitor, Capacitor, Capacitor, [NoValue], [NoValue], [NoValue], [NoValue]	C1, C3, C4, C5, C6, C7, C8, C13, C14, C15, C16	LC-0603_C	C, C, C, Cap, Cap, Cap, Cap, C, C, C, C	11
1uF		C2	LC-0603_C	C_1	1
0.1uf		C9, C10, C11, C17, C21, C22, C23	LC-0603_C	cap	7
		C12	LC-0805_C	C	1
Cap Pol1	Polarized Capacitor (Radial)	C18	100UF钽电容	Cap Pol1	1
Cap Pol1	Polarized Capacitor (Radial)	C19	LC-1206_C	Cap Pol1	1
22uf	Polarized Capacitor (Axial)	C20	LC-0805_R	Cap Pol2	1
Cap	Capacitor	C93, C94, C95, C96	LC-0603_C	Cap	4
Header 5	Header, 5-Pin	CCD1	HDR1X5	Header 5	1
Header 3	Header, 3-Pin	CK1	HDR1X3	Header 3	1
Header 4	Header, 4-Pin	CSB1	HDR1X4	Header 4	1
LED0	Typical INFRARED GaAs LED	D1, D2, D3, D4	LC-0805_LED_S1	LED0	4
ES2D		D5	LC-DO-213AB	DIODE	1
Header 2	Header, 2-Pin	J1	VBAT	Header 2	1
33UH		L1	330电感	Inductor	1
BOOT	Header, 3-Pin	P1	HDR1X3	Header 3	1
Header 4X2	Header, 4-Pin, Dual row	PW	HDR2X4	Header 4X2	1
10K		R1, R5, R11	LC-0603_R	R_1, R_1, res	3
		R2, R3, R4, R6, R7, R9, R10, R13	LC-0603_R	R_1, R_1, R, R_1, R_1, R_1, R_1, R	8
1.5K		R12	LC-0603_R	res	1
SW-PB	Switch	S1, S2	KEY	SW-PB	2
SW-PB	Switch	S3	钮子开关	SW-PB	1
SWD	Header, 4-Pin	SWD1	HDR1X4	Header 4	1
STM32F103C8T6	STM32 ARM-based 32-bit MCU with 64 Kbytes Flash, 48-pin LQFP, Industrial Temperature	U1	LC-LQFP-48_7x7x05P	STM32F103C8T6	1
USB_CONNECTOR		U2	MINI_USB_FEMALE	USB_CONNECTOR	1
AMS1117_1	3.3V电压转换器AMS1117	U3	LC-SOT-223	AMS1117_1	1
	Crystal Oscillator	Y1, Y2	LC-HC-49S	XTAL	2