Rev.	Date	Description	Prepared	Checked	Approved
02	31/01/2012	SBM 2 wiring diagram (blasting machine)	B.Dusold		

Duferco Engineering

Via Paolo Imperiale 4 int. 14
16126 Genova
Tel. ++39/010/8930843
Fax ++39/010/8930847
http://www.duferco.com
E-mail: info@eng.duferco.com

Customer	DUFERCO CLABECQ	**D070523**	Project ID
Project	QUENCHING & TEMPERING PLANT	**CLABECQ**	Plant Location
Title	SBM 2 wiring diagram (blasting machine) — Table: X of X	**QTPC**	Project

System	Phase	Area	Typology	Project	Lot	Company	D/S	Number	
5.3.0.0	**CE**	**000**	**DW**	**QTPC**	**L04**	**ROSL**	**S**	**0049**	Format:A3
Management code				Document identification					Scale:x:xxx

Riproduzione vietata, proprieta' riservata a termini di legge

Duferco Clabecq

Management codes				Document identification				
5.3.0.0	CE	000	DW	QTPC	L04	ROSL	D	0049
System	Phase	Area	Typology	Project	Lot	Company	D/S	Number

1

Rev.	Date	Description	Prepared	Checked	Approved			
						Date 31.01.2012	Duferco (SBM 2) Schaltschrank	
						Dus	in place of	Replaced by

RÖSLER finding a better way ...

= ALLG
+

01-130070 00

Rösler
Oberflächentechnik GmbH

Vorstadt 1
D-96190 Untermerzbach
Tel.: (0) 9533/924-0
Fax: (0) 9533/924-300
www.rosler.com

Kunde Customer	Duferco	
Ort City	Italia	
N.- Nummer N.- Number	4000084	/
Dokumentnummer documentation number	01-130070	Version 00 Version
Maschinentyp machine type	RRB 34/6	
Schaltschranktyp: switch box type:		
Artikelnummer Part number	100001401	
Serialnummer Serial Number	47207	

Bearbeitet am Edit date	20100420
von from	bdusold
Erstellt mit EPLAN Electric P8 Version created with EPLAN Electric P8 Version	1.9.10

Projektinformation
Project information

Einspeisung Power supply	3~/PE IT
Anschlussspannung supply voltage	400 V
Frequenz Frequency	50 Hz
Nennleistung power rating	605 kW
Nennstrom nominal current	1600 A
Vorsicherung main fuse	1600 A
Steuerspannung control voltage	24 VDC
Hauptantrieb main drive	37kW 72A
Kurzschlußstrom short circuit current	Ik < 35 kA
Zuleitung input lead	
Vorschrift Regulation	DIN-EN 60204-1
Projektvorlage project master	01-127500.ell

Verdrahtungsfarben
wiring colors

Lastkreis load circuit	400 V	schwarz black
Steuerspannung control voltage	115/230VAC	rot red
Steuerspannung control voltage	24VAC	rot red
Steuerspannung control voltage	24VDC	dunkelblau dark blue
Neutralleiter neutral conductor		hellblau light blue
Schutzleiter protective wire		grün-gelb green-yellow
Fremdspannung external voltage		orange orange

Table of contents

Inhaltsverzeichnis_SAP_001

Page	Page description	Supplementary page field	Date	Edited by
=ALLG+/0			31.01.2012	bdusold
=ALLG+/1	cover sheet		30.01.2012	bdusold
=ALLG+/2	Project information		31.01.2012	bdusold
=ALLG+/3	Table of contents : =ALLG+/0 - =ES+S/12		30.01.2012	bdusold
=ALLG+/3.a	Table of contents : =ES+S/13 - =ES+S/45		30.01.2012	bdusold
=ALLG+/3.b	Table of contents : =ES+S/46 - =ES+S/78		30.01.2012	bdusold
=ALLG+/3.c	Table of contents : =ES+S/79 - =ES+S/111		30.01.2012	bdusold
=ALLG+/3.d	Table of contents : =ES+S/112 - =ES+S/144		30.01.2012	bdusold
=ALLG+/3.e	Table of contents : =ES+S/145 - =ES+S/177		30.01.2012	bdusold
=ALLG+/3.f	Table of contents : =ES+S/178 - =ES+S/210		30.01.2012	bdusold
=ALLG+/3.g	Table of contents : =ES+S/211 - =ES+S/243		30.01.2012	bdusold
=ALLG+/3.h	Table of contents : =ES+S/244 - =ES+S/276		30.01.2012	bdusold
=ALLG+/3.i	Table of contents : =ES+S/277 - =ES+S/309		30.01.2012	bdusold
=ALLG+/3.j	Table of contents : =ES+S/310 - =ES+S/342		30.01.2012	bdusold
=ALLG+/3.k	Table of contents : =ES+S/343 - =AP+GP1/1		30.01.2012	bdusold
=ALLG+/3.l	Table of contents : =AP+GP1/2 - =AP LEITUNGSSCHACHT+LSA/8		30.01.2012	bdusold
=ALLG+/3.m	Table of contents : =AP LEITUNGSSCHACHT+LSA/9 - =STL+/1.c		30.01.2012	bdusold
=ALLG+/3.n	Table of contents : =STL+/1.d - =STL+/1.zj		30.01.2012	bdusold
=ALLG+/3.o	Table of contents : =STL+/1.zk - =STL+/1.zzq		30.01.2012	bdusold
=ALLG+/3.p	Table of contents : =STL+/1.zzr - =STL+/3.b		30.01.2012	bdusold
=ALLG+/3.q	Table of contents : =STL+/3.c - =STL+/4.a		30.01.2012	bdusold
=ES+S/1	load circuit input lead		30.01.2012	bdusold
=ES+S/2	load circuit input lead FU M1 - M6		30.01.2012	bdusold
=ES+S/3	load circuit roll conveyor inlet M1		30.01.2012	bdusold
=ES+S/4	load circuit roll conveyor inlet M2		30.01.2012	bdusold
=ES+S/5	load circuit roll conveyor inlet M3		30.01.2012	bdusold
=ES+S/6	load circuit roll conveyor inlet M4		30.01.2012	bdusold
=ES+S/7	load circuit roll conveyor inlet M5		30.01.2012	bdusold
=ES+S/8	load circuit roll conveyor inlet M6		30.01.2012	bdusold
=ES+S/9	load circuit input lead FU M7 - M12		30.01.2012	bdusold
=ES+S/10	load circuit roll conveyor inlet M7		30.01.2012	bdusold
=ES+S/11	load circuit roll conveyor inlet M8		30.01.2012	bdusold
=ES+S/12	load circuit roll conveyor inlet M9		30.01.2012	bdusold

Table of contents

Inhaltsverzeichnis_SAP_001

Page	Page description	Supplementary page field	Date	Edited by
=ES+S/13	load circuit roll conveyor inlet M10		30.01.2012	bdusold
=ES+S/14	load circuit roll conveyor inlet M11		30.01.2012	bdusold
=ES+S/15	load circuit roll conveyor inlet M12		30.01.2012	bdusold
=ES+S/16	load circuit input lead FU M13 - M18		30.01.2012	bdusold
=ES+S/17	load circuit roll conveyor inlet M13		30.01.2012	bdusold
=ES+S/18	load circuit roll conveyor inlet M14		30.01.2012	bdusold
=ES+S/19	load circuit roll conveyor inlet M15		30.01.2012	bdusold
=ES+S/20	load circuit roll conveyor inlet M16		30.01.2012	bdusold
=ES+S/21	load circuit roll conveyor inlet M17		30.01.2012	bdusold
=ES+S/22	load circuit roll conveyor inlet M18		30.01.2012	bdusold
=ES+S/23	load circuit input lead FU M19 - M24		30.01.2012	bdusold
=ES+S/24	load circuit roll conveyor inlet M19		30.01.2012	bdusold
=ES+S/25	load circuit roll conveyor inlet M20		30.01.2012	bdusold
=ES+S/26	load circuit roll conveyor inlet M21		30.01.2012	bdusold
=ES+S/27	load circuit roll conveyor inlet M22		30.01.2012	bdusold
=ES+S/28	load circuit roll conveyor inlet M23		30.01.2012	bdusold
=ES+S/29	load circuit roll conveyor inlet M24		30.01.2012	bdusold
=ES+S/30	load circuit input lead FU M25 - M30		30.01.2012	bdusold
=ES+S/31	load circuit roll conveyor inlet M25		30.01.2012	bdusold
=ES+S/32	load circuit roll conveyor inlet M26		30.01.2012	bdusold
=ES+S/33	load circuit roll conveyor inlet M27		30.01.2012	bdusold
=ES+S/34	load circuit roll conveyor inlet M28		30.01.2012	bdusold
=ES+S/35	load circuit roll conveyor inlet M29		30.01.2012	bdusold
=ES+S/36	load circuit roll conveyor inlet M30		30.01.2012	bdusold
=ES+S/37	load circuit input lead FU M31 - M36		30.01.2012	bdusold
=ES+S/38	load circuit roll conveyor inlet M31		30.01.2012	bdusold
=ES+S/39	load circuit roll conveyor inlet M32		30.01.2012	bdusold
=ES+S/40	load circuit roll conveyor inlet M33		30.01.2012	bdusold
=ES+S/41	load circuit roll conveyor inlet M34		30.01.2012	bdusold
=ES+S/42	load circuit roll conveyor inlet M35		30.01.2012	bdusold
=ES+S/43	load circuit roll conveyor inlet M36		30.01.2012	bdusold
=ES+S/44	load circuit input lead FU M37 - M42		30.01.2012	bdusold
=ES+S/45	load circuit roll conveyor inlet M37		30.01.2012	bdusold

Table of contents

Inhaltsverzeichnis_SAP_001

Page	Page description	Supplementary page field	Date	Edited by
=ES+S/46	load circuit roll conveyor inlet M38		30.01.2012	bdusold
=ES+S/47	load circuit roll conveyor inlet M39		30.01.2012	bdusold
=ES+S/48	load circuit roll conveyor inlet M40		30.01.2012	bdusold
=ES+S/49	load circuit roll conveyor inlet M41		30.01.2012	bdusold
=ES+S/50	load circuit roll conveyor inlet M42		30.01.2012	bdusold
=ES+S/51	load circuit input lead FU M43 - M48		30.01.2012	bdusold
=ES+S/52	load circuit roll conveyor inlet M43		30.01.2012	bdusold
=ES+S/53	load circuit roll conveyor inlet M44		30.01.2012	bdusold
=ES+S/54	load circuit roll conveyor inlet M45		30.01.2012	bdusold
=ES+S/55	load circuit roll conveyor inlet M46		30.01.2012	bdusold
=ES+S/56	load circuit roll conveyor inlet M47		30.01.2012	bdusold
=ES+S/57	load circuit roll conveyor inlet M48		30.01.2012	bdusold
=ES+S/58	load circuit input lead FU M49 - M54		30.01.2012	bdusold
=ES+S/59	load circuit roll conveyor inlet M49		30.01.2012	bdusold
=ES+S/60	load circuit roll conveyor inlet M50		30.01.2012	bdusold
=ES+S/61	load circuit roll conveyor inlet M51		30.01.2012	bdusold
=ES+S/62	load circuit roll conveyor inlet M52		30.01.2012	bdusold
=ES+S/63	load circuit roll conveyor inlet M53		30.01.2012	bdusold
=ES+S/64	load circuit roll conveyor inlet M54		30.01.2012	bdusold
=ES+S/65	Control Power supply unit SA2		30.01.2012	bdusold
=ES+S/66	Control Power supply unit SA2		30.01.2012	bdusold
=ES+S/67	load circuit input lead FU M55 - M60		30.01.2012	bdusold
=ES+S/68	load circuit roll conveyor inlet M55		30.01.2012	bdusold
=ES+S/69	load circuit roll conveyor inlet M56		30.01.2012	bdusold
=ES+S/70	load circuit roll conveyor inlet M57		30.01.2012	bdusold
=ES+S/71	load circuit roll conveyor inlet M58		30.01.2012	bdusold
=ES+S/72	load circuit roll conveyor inlet M59		30.01.2012	bdusold
=ES+S/73	load circuit roll conveyor inlet M60		30.01.2012	bdusold
=ES+S/74	load circuit input lead FU M61 - M66		30.01.2012	bdusold
=ES+S/75	load circuit roll conveyor inlet M61		30.01.2012	bdusold
=ES+S/76	load circuit roll conveyor inlet M62		30.01.2012	bdusold
=ES+S/77	load circuit roll conveyor inlet M63		30.01.2012	bdusold
=ES+S/78	load circuit roll conveyor inlet M64		30.01.2012	bdusold

Table of contents

Inhaltsverzeichnis_SAP_001

Page	Page description	Supplementary page field	Date	Edited by
=ES+S/79	load circuit roll conveyor inlet M65		30.01.2012	bdusold
=ES+S/80	load circuit roll conveyor inlet M66		30.01.2012	bdusold
=ES+S/81	load circuit input lead FU M67 - M72		30.01.2012	bdusold
=ES+S/82	load circuit roll conveyor inlet M67		30.01.2012	bdusold
=ES+S/83	load circuit roll conveyor inlet M68		30.01.2012	bdusold
=ES+S/84	load circuit roll conveyor inlet M69		30.01.2012	bdusold
=ES+S/85	load circuit roll conveyor inlet M70		30.01.2012	bdusold
=ES+S/86	load circuit roll conveyor inlet M71		30.01.2012	bdusold
=ES+S/87	load circuit roll conveyor inlet M72		30.01.2012	bdusold
=ES+S/88	load circuit input lead FU M73 - M78		30.01.2012	bdusold
=ES+S/89	load circuit roll conveyor inlet M73		30.01.2012	bdusold
=ES+S/90	load circuit roll conveyor inlet M74		30.01.2012	bdusold
=ES+S/91	load circuit roll conveyor inlet M75		30.01.2012	bdusold
=ES+S/92	load circuit roll conveyor inlet M76		30.01.2012	bdusold
=ES+S/93	load circuit roll conveyor inlet M77		30.01.2012	bdusold
=ES+S/94	load circuit roll conveyor inlet M78		30.01.2012	bdusold
=ES+S/95	load circuit input lead FU M79 - M84		30.01.2012	bdusold
=ES+S/96	load circuit roll conveyor inlet M79		30.01.2012	bdusold
=ES+S/97	load circuit roll conveyor inlet M80		30.01.2012	bdusold
=ES+S/98	load circuit roll conveyor inlet M81		30.01.2012	bdusold
=ES+S/99	load circuit roll conveyor inlet M82		30.01.2012	bdusold
=ES+S/100	load circuit roll conveyor inlet M83		30.01.2012	bdusold
=ES+S/101	load circuit roll conveyor inlet M84		30.01.2012	bdusold
=ES+S/102	load circuit input lead FU M85 - M90		30.01.2012	bdusold
=ES+S/103	load circuit roll conveyor inlet M85		30.01.2012	bdusold
=ES+S/104	load circuit roll conveyor inlet M86		30.01.2012	bdusold
=ES+S/105	load circuit roll conveyor inlet M87		30.01.2012	bdusold
=ES+S/106	load circuit roll conveyor inlet M88		30.01.2012	bdusold
=ES+S/107	load circuit roll conveyor inlet M89		30.01.2012	bdusold
=ES+S/108	load circuit roll conveyor inlet M90		30.01.2012	bdusold
=ES+S/109	load circuit input lead FU M91 - M99		30.01.2012	bdusold
=ES+S/110	load circuit roll conveyor inlet M91		30.01.2012	bdusold
=ES+S/111	load circuit roll conveyor inlet M92		30.01.2012	bdusold

Table of contents

Inhaltsverzeichnis_SAP_001

Page	Page description	Supplementary page field	Date	Edited by
=ES+S/112	load circuit roll conveyor inlet M93		30.01.2012	bdusold
=ES+S/113	load circuit roll conveyor inside to preheater		30.01.2012	bdusold
=ES+S/114	load circuit roll conveyor Blasting installation		30.01.2012	bdusold
=ES+S/115	load circuit roll conveyor inside to painting installation		30.01.2012	bdusold
=ES+S/116	load circuit input lead FU M101 - M102 + outlet M1 - M5		30.01.2012	bdusold
=ES+S/117	load circuit chain conveyor 1		30.01.2012	bdusold
=ES+S/118	load circuit chain conveyor 2		30.01.2012	bdusold
=ES+S/119	load circuit roll conveyor outlet M1		30.01.2012	bdusold
=ES+S/120	load circuit roll conveyor outlet M2		30.01.2012	bdusold
=ES+S/121	load circuit roll conveyor outlet M3		30.01.2012	bdusold
=ES+S/122	load circuit roll conveyor outlet M4		30.01.2012	bdusold
=ES+S/123	load circuit roll conveyor outlet M5		30.01.2012	bdusold
=ES+S/124	load circuit input lead FU M6 - M10		30.01.2012	bdusold
=ES+S/125	load circuit roll conveyor outlet M6		30.01.2012	bdusold
=ES+S/126	load circuit roll conveyor outlet M7		30.01.2012	bdusold
=ES+S/127	load circuit roll conveyor outlet M8		30.01.2012	bdusold
=ES+S/128	load circuit roll conveyor outlet M9		30.01.2012	bdusold
=ES+S/129	load circuit roll conveyor outlet M10		30.01.2012	bdusold
=ES+S/130	Control Power supply unit SA3		30.01.2012	bdusold
=ES+S/131	Control Power supply unit SA3		30.01.2012	bdusold
=ES+S/132	load circuit input lead FU M11 - M16		30.01.2012	bdusold
=ES+S/133	load circuit roll conveyor outlet M11		30.01.2012	bdusold
=ES+S/134	load circuit roll conveyor outlet M12		30.01.2012	bdusold
=ES+S/135	load circuit roll conveyor outlet M13		30.01.2012	bdusold
=ES+S/136	load circuit roll conveyor outlet M14		30.01.2012	bdusold
=ES+S/137	load circuit roll conveyor outlet M15		30.01.2012	bdusold
=ES+S/138	load circuit roll conveyor outlet M16		30.01.2012	bdusold
=ES+S/139	load circuit input lead FU M17 - M22		30.01.2012	bdusold
=ES+S/140	load circuit roll conveyor outlet M17		30.01.2012	bdusold
=ES+S/141	load circuit roll conveyor outlet M18		30.01.2012	bdusold
=ES+S/142	load circuit roll conveyor outlet M19		30.01.2012	bdusold
=ES+S/143	load circuit roll conveyor outlet M20		30.01.2012	bdusold
=ES+S/144	load circuit roll conveyor outlet M21		30.01.2012	bdusold

Table of contents

Inhaltsverzeichnis_SAP_001

Page	Page description	Supplementary page field	Date	Edited by
=ES+S/145	load circuit roll conveyor outlet M22		30.01.2012	bdusold
=ES+S/146	load circuit input lead FU M23 - M28		30.01.2012	bdusold
=ES+S/147	load circuit roll conveyor outlet M23		30.01.2012	bdusold
=ES+S/148	load circuit roll conveyor outlet M24		30.01.2012	bdusold
=ES+S/149	load circuit roll conveyor outlet M25		30.01.2012	bdusold
=ES+S/150	load circuit roll conveyor outlet M26		30.01.2012	bdusold
=ES+S/151	load circuit roll conveyor outlet M27		30.01.2012	bdusold
=ES+S/152	load circuit roll conveyor outlet M28		30.01.2012	bdusold
=ES+S/153	load circuit input lead FU M29 - M34		30.01.2012	bdusold
=ES+S/154	load circuit roll conveyor outlet M29		30.01.2012	bdusold
=ES+S/155	load circuit roll conveyor outlet M30		30.01.2012	bdusold
=ES+S/156	load circuit roll conveyor outlet M31		30.01.2012	bdusold
=ES+S/157	load circuit roll conveyor outlet M32		30.01.2012	bdusold
=ES+S/158	load circuit roll conveyor outlet M33		30.01.2012	bdusold
=ES+S/159	load circuit roll conveyor outlet M34		30.01.2012	bdusold
=ES+S/160	load circuit input lead FU M35 - M40		30.01.2012	bdusold
=ES+S/161	load circuit roll conveyor outlet M35		30.01.2012	bdusold
=ES+S/162	load circuit roll conveyor outlet M36		30.01.2012	bdusold
=ES+S/163	load circuit roll conveyor outlet M37		30.01.2012	bdusold
=ES+S/164	load circuit roll conveyor outlet M38		30.01.2012	bdusold
=ES+S/165	load circuit roll conveyor outlet M39		30.01.2012	bdusold
=ES+S/166	load circuit roll conveyor outlet M40		30.01.2012	bdusold
=ES+S/167	load circuit input lead FU M41 - M46		30.01.2012	bdusold
=ES+S/168	load circuit roll conveyor outlet M41		30.01.2012	bdusold
=ES+S/169	load circuit roll conveyor outlet M42		30.01.2012	bdusold
=ES+S/170	load circuit roll conveyor outlet M43		30.01.2012	bdusold
=ES+S/171	load circuit roll conveyor outlet M44		30.01.2012	bdusold
=ES+S/172	load circuit roll conveyor outlet M45		30.01.2012	bdusold
=ES+S/173	load circuit roll conveyor outlet M46		30.01.2012	bdusold
=ES+S/174	load circuit input lead FU M47 - M52		30.01.2012	bdusold
=ES+S/175	load circuit roll conveyor outlet M47		30.01.2012	bdusold
=ES+S/176	load circuit roll conveyor outlet M48		30.01.2012	bdusold
=ES+S/177	load circuit roll conveyor outlet M49		30.01.2012	bdusold

Table of contents

Inhaltsverzeichnis_SAP_001

Page	Page description	Supplementary page field	Date	Edited by
=ES+S/178	load circuit roll conveyor outlet M50		30.01.2012	bdusold
=ES+S/179	load circuit roll conveyor outlet M51		30.01.2012	bdusold
=ES+S/180	load circuit roll conveyor outlet M52		30.01.2012	bdusold
=ES+S/181	load circuit input lead FU M53 - M58		30.01.2012	bdusold
=ES+S/182	load circuit roll conveyor outlet M53		30.01.2012	bdusold
=ES+S/183	load circuit roll conveyor outlet M54		30.01.2012	bdusold
=ES+S/184	load circuit roll conveyor outlet M55		30.01.2012	bdusold
=ES+S/185	load circuit roll conveyor outlet M56		30.01.2012	bdusold
=ES+S/186	load circuit roll conveyor outlet M57		30.01.2012	bdusold
=ES+S/187	load circuit roll conveyor outlet M58		30.01.2012	bdusold
=ES+S/188	load circuit input lead FU M59 - M63		30.01.2012	bdusold
=ES+S/189	load circuit roll conveyor outlet M59		30.01.2012	bdusold
=ES+S/190	load circuit roll conveyor outlet M60		30.01.2012	bdusold
=ES+S/191	load circuit roll conveyor outlet M61		30.01.2012	bdusold
=ES+S/192	load circuit roll conveyor outlet M62		30.01.2012	bdusold
=ES+S/193	load circuit roll conveyor outlet M63		30.01.2012	bdusold
=ES+S/194	Control Power supply unit SA4		30.01.2012	bdusold
=ES+S/195	Control Power supply unit SA4		30.01.2012	bdusold
=ES+S/196	load circuit blast media		30.01.2012	bdusold
=ES+S/197	load circuit blast media		30.01.2012	bdusold
=ES+S/198	load circuit Filter		30.01.2012	bdusold
=ES+S/199	load circuit cleaning station		30.01.2012	bdusold
=ES+S/200	load circuit blasting wheel 1		30.01.2012	bdusold
=ES+S/201	load circuit blasting wheel 2		30.01.2012	bdusold
=ES+S/202	load circuit blasting wheel 3		30.01.2012	bdusold
=ES+S/203	load circuit blasting wheel 4		30.01.2012	bdusold
=ES+S/204	load circuit blasting wheel 5		30.01.2012	bdusold
=ES+S/205	load circuit blasting wheel 6		30.01.2012	bdusold
=ES+S/206	load circuit blasting wheel 7		30.01.2012	bdusold
=ES+S/207	load circuit blasting wheel 8		30.01.2012	bdusold
=ES+S/208	load circuit preheater		30.01.2012	bdusold
=ES+S/209	load circuit hydraulic aggregate		30.01.2012	bdusold
=ES+S/210	load circuit 230V transformer 1		30.01.2012	bdusold

Table of contents

Inhaltsverzeichnis_SAP_001

Page	Page description	Supplementary page field	Date	Edited by
=ES+S/211	load circuit 230V transformer 1		30.01.2012	bdusold
=ES+S/212	load circuit 230V transformer 1		30.01.2012	bdusold
=ES+S/213	load circuit 230V transformer 1		30.01.2012	bdusold
=ES+S/214	load circuit 230V transformer 2		30.01.2012	bdusold
=ES+S/215	Control Power supply unit 1		30.01.2012	bdusold
=ES+S/216	Control Power supply unit 1		30.01.2012	bdusold
=ES+S/217	Control Power supply unit 2		30.01.2012	bdusold
=ES+S/218	Control Power supply unit 2		30.01.2012	bdusold
=ES+S/219	Control camera 1+2		30.01.2012	bdusold
=ES+S/220	Control Ethernet/LAN control room		30.01.2012	bdusold
=ES+S/221	Control erection PLC CPU + OP		30.01.2012	bdusold
=ES+S/222	Control erection PLC Rack 1		30.01.2012	bdusold
=ES+S/223	Control erection PLC Rack 2		30.01.2012	bdusold
=ES+S/224	Control DP		30.01.2012	bdusold
=ES+S/225	Control DP blasting wheel		30.01.2012	bdusold
=ES+S/226	Control DP blasting wheel		30.01.2012	bdusold
=ES+S/227	Control DP ET 200S + FU SA2		30.01.2012	bdusold
=ES+S/228	Control DP SA2		30.01.2012	bdusold
=ES+S/229	Control DP SA2		30.01.2012	bdusold
=ES+S/230	Control DP SA2		30.01.2012	bdusold
=ES+S/231	Control DP SA2		30.01.2012	bdusold
=ES+S/232	Control DP SA2		30.01.2012	bdusold
=ES+S/233	Control DP SA2		30.01.2012	bdusold
=ES+S/234	Control DP SA2		30.01.2012	bdusold
=ES+S/235	Control DP SA2		30.01.2012	bdusold
=ES+S/236	Control DP SA2		30.01.2012	bdusold
=ES+S/237	Control DP SA2		30.01.2012	bdusold
=ES+S/238	Control DP SA2		30.01.2012	bdusold
=ES+S/239	Control DP ET 200S + FU SA3		30.01.2012	bdusold
=ES+S/240	Control DP SA3		30.01.2012	bdusold
=ES+S/241	Control DP SA3		30.01.2012	bdusold
=ES+S/242	Control DP SA3		30.01.2012	bdusold
=ES+S/243	Control DP SA3		30.01.2012	bdusold

Table of contents

Inhaltsverzeichnis_SAP_001

Page	Page description	Supplementary page field	Date	Edited by
=ES+S/244	Control DP SA3		30.01.2012	bdusold
=ES+S/245	Control DP SA3		30.01.2012	bdusold
=ES+S/246	Control DP SA3		30.01.2012	bdusold
=ES+S/247	Control DP SA3		30.01.2012	bdusold
=ES+S/248	Control DP SA3		30.01.2012	bdusold
=ES+S/249	Control DP SA3		30.01.2012	bdusold
=ES+S/250	Control DP SA3		30.01.2012	bdusold
=ES+S/251	Control DP ET 200S + FU SA4		30.01.2012	bdusold
=ES+S/252	Control DP SA4		30.01.2012	bdusold
=ES+S/253	Control DP SA4		30.01.2012	bdusold
=ES+S/254	Control DP SA4		30.01.2012	bdusold
=ES+S/255	Control DP SA4		30.01.2012	bdusold
=ES+S/256	Control DP SA4		30.01.2012	bdusold
=ES+S/257	Control DP SA4		30.01.2012	bdusold
=ES+S/258	Control DP SA4		30.01.2012	bdusold
=ES+S/259	Control DP SA4		30.01.2012	bdusold
=ES+S/260	Control DP SA4		30.01.2012	bdusold
=ES+S/261	Control DP SA4		30.01.2012	bdusold
=ES+S/262	Control Mobile Panel 177		30.01.2012	bdusold
=ES+S/263	Control DP measurement parts Height		30.01.2012	bdusold
=ES+S/264	control emergency shut down		30.01.2012	bdusold
=ES+S/265	control emergency shut down		30.01.2012	bdusold
=ES+S/266	Control Emergency stop Duferco		30.01.2012	bdusold
=ES+S/267	Control monitoring blasting wheel cover		30.01.2012	bdusold
=ES+S/268	Control monitoring blasting wheel cover		30.01.2012	bdusold
=ES+S/269	control operating hours counter		30.01.2012	bdusold
=ES+S/270	Control input lead frequency converter roll conveyor		30.01.2012	bdusold
=ES+S/271	Control input lead frequency converter roll conveyor		30.01.2012	bdusold
=ES+S/272	Control input lead frequency converter roll conveyor		30.01.2012	bdusold
=ES+S/273	Control input lead frequency converter blast wheels		30.01.2012	bdusold
=ES+S/274	Control Filter bucket plant		30.01.2012	bdusold
=ES+S/275	Control preheater		30.01.2012	bdusold
=ES+S/276	Control saftey function PNOZ multi		30.01.2012	bdusold

Table of contents

Inhaltsverzeichnis_SAP_001

Page	Page description	Supplementary page field	Date	Edited by
=ES+S/277	Control door safety fence range 1		30.01.2012	bdusold
=ES+S/278	Control door safety fence range 3		30.01.2012	bdusold
=ES+S/279	----------		30.01.2012	bdusold
=ES+S/280	Control door safety fence range 4		30.01.2012	bdusold
=ES+S/281	Control saftey function I0-7		30.01.2012	bdusold
=ES+S/282	Control saftey function I8-15		30.01.2012	bdusold
=ES+S/283	Control saftey function I16-19		30.01.2012	bdusold
=ES+S/284	Control saftey function O0-3		30.01.2012	bdusold
=ES+S/285	Control saftey function O4-5		30.01.2012	bdusold
=ES+S/286	Control saftey function O6-9		30.01.2012	bdusold
=ES+S/287	Control saftey function I20-23		30.01.2012	bdusold
=ES+S/288	Control saftey function I24-27		30.01.2012	bdusold
=ES+S/289	Control EB 0		30.01.2012	bdusold
=ES+S/290	Control EB 1		30.01.2012	bdusold
=ES+S/291	Control AB 4		30.01.2012	bdusold
=ES+S/292	Control AB 5		30.01.2012	bdusold
=ES+S/293	Control AB 8		30.01.2012	bdusold
=ES+S/294	Control AB 9		30.01.2012	bdusold
=ES+S/295	Control EB 12		30.01.2012	bdusold
=ES+S/296	Control EB 13		30.01.2012	bdusold
=ES+S/297	Control AB 16		30.01.2012	bdusold
=ES+S/298	Control AB 17		30.01.2012	bdusold
=ES+S/299	Control FM350-2		30.01.2012	bdusold
=ES+S/300	Control FM350-2		30.01.2012	bdusold
=ES+S/301	Control FM350-2		30.01.2012	bdusold
=ES+S/302	Control FM350-2		30.01.2012	bdusold
=ES+S/303	Control FM350-2		30.01.2012	bdusold
=ES+S/304	Control FM350-2		30.01.2012	bdusold
=ES+S/305	Control AB 24		30.01.2012	bdusold
=ES+S/306	Control AB 25		30.01.2012	bdusold
=ES+S/307	Control EB 28		27.01.2012	bdusold
=ES+S/308	Control EB 29		30.01.2012	bdusold
=ES+S/309	Control EW 384-390		30.01.2012	bdusold

Table of contents

Inhaltsverzeichnis_SAP_001

Page	Page description	Supplementary page field	Date	Edited by
=ES+S/310	Control EW 392-398		30.01.2012	bdusold
=ES+S/311	Control FM350-1 (2)		30.01.2012	bdusold
=ES+S/312	Control FM350-1 (2)		30.01.2012	bdusold
=ES+S/313	Control FM350-1 (2)		30.01.2012	bdusold
=ES+S/314	Control EB 30		30.01.2012	bdusold
=ES+S/315	Control EB 31		30.01.2012	bdusold
=ES+S/316	Control AB 32		30.01.2012	bdusold
=ES+S/317	Control AB 33		30.01.2012	bdusold
=ES+S/318	Control EB 40 ET 200S SA2		30.01.2012	bdusold
=ES+S/319	Control EB 40 ET 200S SA2		30.01.2012	bdusold
=ES+S/320	Control EB 41 ET 200S SA2		30.01.2012	bdusold
=ES+S/321	Control EB 41 ET 200S SA2		30.01.2012	bdusold
=ES+S/322	Control EB 42 ET 200S SA2		30.01.2012	bdusold
=ES+S/323	Control EB 42 ET 200S SA2		30.01.2012	bdusold
=ES+S/324	Control EB 43 ET 200S SA3		30.01.2012	bdusold
=ES+S/325	Control EB 43 ET 200S SA3		30.01.2012	bdusold
=ES+S/326	Control EB 44 ET 200S SA3		30.01.2012	bdusold
=ES+S/327	Control EB 44 ET 200S SA3		30.01.2012	bdusold
=ES+S/328	Control EB 45 ET 200S SA3		30.01.2012	bdusold
=ES+S/329	Control EB 45 ET 200S SA3		30.01.2012	bdusold
=ES+S/330	Control EB 46 ET 200S SA4		30.01.2012	bdusold
=ES+S/331	Control EB 46 ET 200S SA4		30.01.2012	bdusold
=ES+S/332	Control EB 47 ET 200S SA4		30.01.2012	bdusold
=ES+S/333	Control EB 47 ET 200S SA4		30.01.2012	bdusold
=ES+S/334	Control EB 48 ET 200S SA4		30.01.2012	bdusold
=ES+S/335	Control EB 48 ET 200S SA4		30.01.2012	bdusold
=ES+S/336	Control erection PLC ET 200S pneumatics		30.01.2012	bdusold
=ES+S/337	Control AB 60		30.01.2012	bdusold
=ES+S/338	Control AB 60		30.01.2012	bdusold
=ES+S/339	Control AB 61		30.01.2012	bdusold
=ES+S/340	Control AB 61		30.01.2012	bdusold
=ES+S/341	Control AB 62		30.01.2012	bdusold
=ES+S/342	Control AB 62		30.01.2012	bdusold

Table of contents

Inhaltsverzeichnis_SAP_001

Page	Page description	Supplementary page field	Date	Edited by
=ES+S/343	Control EB 63		30.01.2012	bdusold
=ES+S/344	Control EB 63		30.01.2012	bdusold
=ES+S/345	Control erection PLC ET 200S blasting system		30.01.2012	bdusold
=ES+S/346	Control EB 70		30.01.2012	bdusold
=ES+S/347	Control EB 70		30.01.2012	bdusold
=ES+S/348	Control EB 71		30.01.2012	bdusold
=ES+S/349	Control EB 71		30.01.2012	bdusold
=ES+S/350	Control EB 72		30.01.2012	bdusold
=ES+S/351	Control EB 72		30.01.2012	bdusold
=ES+S/352	Control EB 73		30.01.2012	bdusold
=ES+S/353	Control EB 73		30.01.2012	bdusold
=ES+S/354	Control EB 74		30.01.2012	bdusold
=ES+S/355	Control EB 74		30.01.2012	bdusold
=ES+S/356	Control EB 75		30.01.2012	bdusold
=ES+S/357	Control EB 75		30.01.2012	bdusold
=ES+S/358	Control EB 76		30.01.2012	bdusold
=ES+S/359	Control EB 76		30.01.2012	bdusold
=ES+S/360	----------		30.01.2012	bdusold
=ES+S/361	Control isolation amplifier		30.01.2012	bdusold
=ES+S/362	Control erection PLC ET 200S roll conveyor TPC2		30.01.2012	bdusold
=ES+S/363	Control EB 80		30.01.2012	bdusold
=ES+S/364	Control EB 80		30.01.2012	bdusold
=ES+S/365	Control EB 81		30.01.2012	bdusold
=ES+S/366	Control EB 81		30.01.2012	bdusold
=ES+S/367	Control erection PLC ET 200S roll conveyor TPC3		30.01.2012	bdusold
=ES+S/368	Steuerung EB 90		30.01.2012	bdusold
=ES+S/369	Steuerung EB 90		30.01.2012	bdusold
=ES+S/370	Control EB 91		30.01.2012	bdusold
=ES+S/371	Control EB 91		30.01.2012	bdusold
=ES+S/372	Control AB 92		30.01.2012	bdusold
=ES+S/373	Control EB 93		30.01.2012	bdusold
=AP+GP0/1	baseplate		30.01.2012	bdusold
=AP+GP1/1	baseplate left		30.01.2012	bdusold

Table of contents

Inhaltsverzeichnis_SAP_001

Page	Page description	Supplementary page field	Date	Edited by
=AP+GP1/2	baseplate center left		30.01.2012	bdusold
=AP+GP1/3	baseplate center right		30.01.2012	bdusold
=AP+GP1/4	Grundplatte rechts		30.01.2012	bdusold
=AP+GP2/1	baseplate left		30.01.2012	bdusold
=AP+GP2/2	baseplate center		30.01.2012	bdusold
=AP+GP2/3	baseplate right		30.01.2012	bdusold
=AP+GP3/1	baseplate left		30.01.2012	bdusold
=AP+GP3/2	baseplate center		30.01.2012	bdusold
=AP+GP3/3	baseplate right		30.01.2012	bdusold
=AP+GP4/1	baseplate left		30.01.2012	bdusold
=AP+GP4/2	baseplate center		30.01.2012	bdusold
=AP+GP4/3	baseplate right		30.01.2012	bdusold
=AP+SA0/1	erection Enclosure		30.01.2012	bdusold
=AP+SA1/1	erection Enclosure		30.01.2012	bdusold
=AP+SA2/1	erection Enclosure		30.01.2012	bdusold
=AP+SA3/1	erection Enclosure		30.01.2012	bdusold
=AP+SA4/1	erection Enclosure		30.01.2012	bdusold
=AP+BDP/1	console control room		30.01.2012	bdusold
=AP+BDP/2	terminal box XL11		30.01.2012	bdusold
=AP+BDP/3	terminal box XL12		30.01.2012	bdusold
=AP+BDP/4	terminal box XL13		30.01.2012	bdusold
=AP+BDP/5	terminal box XL14		30.01.2012	bdusold
=AP+BDP/6	console Emergency stop		30.01.2012	bdusold
=AP+BDP/7	terminal box camera		30.01.2012	bdusold
=AP+BDP/8	----------		30.01.2012	bdusold
=AP LEITUNGSSCHACHT+LSA/1	Übersicht Kabelrinnen		30.01.2012	bdusold
=AP LEITUNGSSCHACHT+LSA/2	Schnittpunkt S1		30.01.2012	bdusold
=AP LEITUNGSSCHACHT+LSA/3	Schnittpunkt S2		30.01.2012	bdusold
=AP LEITUNGSSCHACHT+LSA/4	Schnittpunkt S3		30.01.2012	bdusold
=AP LEITUNGSSCHACHT+LSA/5	Schnittpunkt S4		30.01.2012	bdusold
=AP LEITUNGSSCHACHT+LSA/6	Schnittpunkt S5		30.01.2012	bdusold
=AP LEITUNGSSCHACHT+LSA/7	Schnittpunkt S6		30.01.2012	bdusold
=AP LEITUNGSSCHACHT+LSA/8	Schnittpunkt S7		30.01.2012	bdusold

Table of contents

Inhaltsverzeichnis_SAP_001

Page	Page description	Supplementary page field	Date	Edited by
=AP LEITUNGSSCHACHT+LSA/9	Schnittpunkt S8		30.01.2012	bdusold
=AP LEITUNGSSCHACHT+LSA/10	Schnittpunkt S9		30.01.2012	bdusold
=AP LEITUNGSSCHACHT+LSA/11	Schnittpunkt S10		30.01.2012	bdusold
=KP+/1	Terminal-strip overview : 5 - 3		30.01.2012	bdusold
=KP+/1.a	Terminal-strip overview : 3 - 3		30.01.2012	bdusold
=KP+/1.b	Terminal-strip overview : 3 - 3		30.01.2012	bdusold
=KP+/1.c	Terminal-strip overview : 3 - 3		30.01.2012	bdusold
=KP+/1.d	Terminal-strip overview : 3 - 3		30.01.2012	bdusold
=KP+/1.e	Terminal-strip overview : 3 - 507		30.01.2012	bdusold
=KP+/2	Cable overview : =ES+S-W9215 - =ES+E-WBM1.29		23.01.2012	bdusold
=KP+/2.a	Cable overview : =ES+E-WBM1.30 - =ES+E-WBM1.75		23.01.2012	bdusold
=KP+/2.b	Cable overview : =ES+E-WBM1.76 - =ES+E-WBM2.23		23.01.2012	bdusold
=KP+/2.c	Cable overview : =ES+E-WBM2.24 - =ES+E-WM1.6		23.01.2012	bdusold
=KP+/2.d	Cable overview : =ES+E-WM1.7 - =ES+E-WM1.52		23.01.2012	bdusold
=KP+/2.e	Cable overview : =ES+E-WM1.53 - =ES+E-WM1.102		23.01.2012	bdusold
=KP+/2.f	Cable overview : =ES+E-WM2.1 - =ES+E-WM2.46		23.01.2012	bdusold
=KP+/2.g	Cable overview : =ES+E-WM2.47 - =ES+E-WM8.41		23.01.2012	bdusold
=KP+/2.h	Cable overview : =ES+E-WM8.42 - =ES+E-WML1.1		23.01.2012	bdusold
=KP+/2.i	Cable overview : =ES+E-WML1.2 - =ES+E-WML1.47		23.01.2012	bdusold
=KP+/2.j	Cable overview : =ES+E-WML1.48 - =ES+E-WML1.93		23.01.2012	bdusold
=KP+/2.k	Cable overview : =ES+E-WML1.95 - =ES+E-WML2.41		23.01.2012	bdusold
=KP+/2.l	Cable overview : =ES+E-WML2.42 - =ES+E-WRM1.22		23.01.2012	bdusold
=KP+/2.m	Cable overview : =ES+E-WRM1.23 - =ES+E-WRM1.68		23.01.2012	bdusold
=KP+/2.n	Cable overview : =ES+E-WRM1.69 - =ES+E-WRM2.16		23.01.2012	bdusold
=KP+/2.o	Cable overview : =ES+E-WRM2.17 - =ES+E-WRM2.62		23.01.2012	bdusold
=KP+/2.p	Cable overview : =ES+E-WRM2.63 - =ES+E-WXBM1.33		23.01.2012	bdusold
=KP+/2.q	Cable overview : =ES+E-WXBM1.34 - =ES+E-WXBM1.79		23.01.2012	bdusold
=KP+/2.r	Cable overview : =ES+E-WXBM1.80 - =ES+E-WXBM2.27		23.01.2012	bdusold
=KP+/2.s	Cable overview : =ES+E-WXBM2.28 - =ES+E-WYM8.43		23.01.2012	bdusold
=STL+/1	Parts list : ESIZ0062 - ESIF0110		30.01.2012	bdusold
=STL+/1.a	Parts list : ESIF0012 - ESIA7310		30.01.2012	bdusold
=STL+/1.b	Parts list : ESIA7082 - ESIA7024		30.01.2012	bdusold
=STL+/1.c	Parts list : ESIA7342 - ESIA7136		30.01.2012	bdusold

Table of contents

Inhaltsverzeichnis_SAP_001

Page	Page description	Supplementary page field	Date	Edited by
=STL+/1.d	Parts list : ESIA7197 - ESIA7136		30.01.2012	bdusold
=STL+/1.e	Parts list : ESIA7197 - ESIA7152		30.01.2012	bdusold
=STL+/1.f	Parts list : ESIA7139 - ESJZ9100		30.01.2012	bdusold
=STL+/1.g	Parts list : ESJK9022 - EBNA9001		30.01.2012	bdusold
=STL+/1.h	Parts list : EBNA9001 - ESJK9040		30.01.2012	bdusold
=STL+/1.i	Parts list : ESJK0022 - EPZA9006		30.01.2012	bdusold
=STL+/1.j	Parts list : EPZA9007 - ERIA3035		30.01.2012	bdusold
=STL+/1.k	Parts list : ERIA3047 - EWOF1014		30.01.2012	bdusold
=STL+/1.l	Parts list : ESJQ3080 - ESJQ3305		30.01.2012	bdusold
=STL+/1.m	Parts list : ESJQ3080 - ESJQ3080		30.01.2012	bdusold
=STL+/1.n	Parts list : ESJQ3080 - ESJQ3304		30.01.2012	bdusold
=STL+/1.o	Parts list : ESJQ3305 - ESJQ3080		30.01.2012	bdusold
=STL+/1.p	Parts list : ESJQ3080 - ESJQ3080		30.01.2012	bdusold
=STL+/1.q	Parts list : ESJQ3080 - ESJQ3080		30.01.2012	bdusold
=STL+/1.r	Parts list : ESJQ3080 - ESJQ3312		30.01.2012	bdusold
=STL+/1.s	Parts list : EWOF1202 - EWOF1202		30.01.2012	bdusold
=STL+/1.t	Parts list : ESJQ3900 - ESJZ9100		30.01.2012	bdusold
=STL+/1.u	Parts list : ESJK9305 - EDSQ9102		30.01.2012	bdusold
=STL+/1.v	Parts list : EDSQ9102 - ESJQ3001		30.01.2012	bdusold
=STL+/1.w	Parts list : ESJQ3001 - ESJQ3001		30.01.2012	bdusold
=STL+/1.x	Parts list : ESJQ3001 - ESJQ3001		30.01.2012	bdusold
=STL+/1.y	Parts list : ESJQ3001 - ESJQ3001		30.01.2012	bdusold
=STL+/1.z	Parts list : ESJQ3001 - ESJK0003		30.01.2012	bdusold
=STL+/1.za	Parts list : ESJK9337 - ESJQ3032		30.01.2012	bdusold
=STL+/1.zb	Parts list : EWOF1200 - ESJQ3312		30.01.2012	bdusold
=STL+/1.zc	Parts list : ESJQ3315 - ESJK0002		30.01.2012	bdusold
=STL+/1.zd	Parts list : ESJQ3450 - ESJQ3315		30.01.2012	bdusold
=STL+/1.ze	Parts list : EWOF1201 - ESJZ9103		30.01.2012	bdusold
=STL+/1.zf	Parts list : ESJK9322 - ESJK9322		30.01.2012	bdusold
=STL+/1.zg	Parts list : ESJZ9103 - ESIR4301		30.01.2012	bdusold
=STL+/1.zh	Parts list : ESIR4301 - ESIR4301		30.01.2012	bdusold
=STL+/1.zi	Parts list : ESIR4301 - ESIR4301		30.01.2012	bdusold
=STL+/1.zj	Parts list : ESIR4301 - ESIR4301		30.01.2012	bdusold

Table of contents

Inhaltsverzeichnis_SAP_001

Page	Page description	Supplementary page field	Date	Edited by
=STL+/1.zk	Parts list : ESIR4301 - ESIS3901		31.01.2012	bdusold
=STL+/1.zl	Parts list : ESIS3011 - ERIA8220		31.01.2012	bdusold
=STL+/1.zm	Parts list : ERIA8106L - ERIA8026		31.01.2012	bdusold
=STL+/1.zn	Parts list : ERIA8220 - ESIA4393		31.01.2012	bdusold
=STL+/1.zo	Parts list : ESIA7047 - ESIZ2401		30.01.2012	bdusold
=STL+/1.zp	Parts list : ESIA4302-N - ESIA2400		30.01.2012	bdusold
=STL+/1.zq	Parts list : ESIA4392 - ESIA4393		30.01.2012	bdusold
=STL+/1.zr	Parts list : ESIA7047 - ESIZ2401		30.01.2012	bdusold
=STL+/1.zs	Parts list : ESIA4302-N - ESIA2400		30.01.2012	bdusold
=STL+/1.zt	Parts list : ESIA4392 - ESIA4393		30.01.2012	bdusold
=STL+/1.zu	Parts list : ESIA7047 - ESIZ2401		30.01.2012	bdusold
=STL+/1.zv	Parts list : ESIA4302-N - ESIA2400		30.01.2012	bdusold
=STL+/1.zw	Parts list : ESIA4392 - ESIA4393		30.01.2012	bdusold
=STL+/1.zx	Parts list : ESIA7047 - ESIZ2401		30.01.2012	bdusold
=STL+/1.zy	Parts list : ESIA4302-N - ESIA2400		30.01.2012	bdusold
=STL+/1.zz	Parts list : ESIA4392 - ESIA4393		30.01.2012	bdusold
=STL+/1.zza	Parts list : ESIA7047 - ESIZ2401		30.01.2012	bdusold
=STL+/1.zzb	Parts list : ESIA4302-N - ESIA2400		30.01.2012	bdusold
=STL+/1.zzc	Parts list : ESIA4392 - ESIA4393		30.01.2012	bdusold
=STL+/1.zzd	Parts list : ESIA7047 - ESIZ2401		30.01.2012	bdusold
=STL+/1.zze	Parts list : ESIA4302-N - ESIA2400		30.01.2012	bdusold
=STL+/1.zzf	Parts list : ESIA4392 - ESIA4393		30.01.2012	bdusold
=STL+/1.zzg	Parts list : ESIA7047 - ESIZ2401		30.01.2012	bdusold
=STL+/1.zzh	Parts list : ESIA4302-N - ESIA2400		30.01.2012	bdusold
=STL+/1.zzi	Parts list : ESIA4392 - ESIA4393		30.01.2012	bdusold
=STL+/1.zzj	Parts list : ESIA7047 - ESIZ2401		30.01.2012	bdusold
=STL+/1.zzk	Parts list : ESIA4302-N - ESIA2400		30.01.2012	bdusold
=STL+/1.zzl	Parts list : ESIA4392 - ESIA4393		30.01.2012	bdusold
=STL+/1.zzm	Parts list : ESIA7047 - ESIA4391		30.01.2012	bdusold
=STL+/1.zzn	Parts list : ESIA4392 - ESIZ4203		30.01.2012	bdusold
=STL+/1.zzo	Parts list : ESIZ4203 - ESIZ4203		30.01.2012	bdusold
=STL+/1.zzp	Parts list : ESIZ4203 - ESIZ4207		30.01.2012	bdusold
=STL+/1.zzq	Parts list : ESIZ4203 - ESIZ4203		30.01.2012	bdusold

Table of contents

Inhaltsverzeichnis_SAP_001

Page	Page description	Supplementary page field	Date	Edited by
=STL+/1.zzr	Parts list : ESIZ4203 - ESIT3924		30.01.2012	bdusold
=STL+/1.zzs	Parts list : ESIA7048 - ERIA0117		30.01.2012	bdusold
=STL+/2	Parts list : EOPA9001 - ELZS1001		30.01.2012	bdusold
=STL+/2.a	Parts list : ELZS1002 - ELZS1001		30.01.2012	bdusold
=STL+/2.b	Parts list : ELZS1002 - EFEA9001		30.01.2012	bdusold
=STL+/2.c	Parts list : EFEA9001 - AEKE0206		30.01.2012	bdusold
=STL+/2.d	Parts list : AEKE0206 - AEKE0206		30.01.2012	bdusold
=STL+/2.e	Parts list : AEKE0206 - AEKE0206		30.01.2012	bdusold
=STL+/2.f	Parts list : AEKE0206 - AEKE0206		30.01.2012	bdusold
=STL+/2.g	Parts list : AEKE0206 - AED00273		30.01.2012	bdusold
=STL+/2.h	Parts list : HSG00059 - ELAW6041		30.01.2012	bdusold
=STL+/2.i	Parts list : ELAW6041 - ELAW6041		30.01.2012	bdusold
=STL+/2.j	Parts list : ELAW6041 - ELAW6041		30.01.2012	bdusold
=STL+/2.k	Parts list : ELAW6041 - ELAW6041		30.01.2012	bdusold
=STL+/2.l	Parts list : ELAW6041 - ELAW1041		30.01.2012	bdusold
=STL+/2.m	Parts list : ELAW1041 - ELAW6043		30.01.2012	bdusold
=STL+/2.n	Parts list : ELAW1071 - ELAW1040		30.01.2012	bdusold
=STL+/2.o	Parts list : ELAW1040 - ELAW1040		30.01.2012	bdusold
=STL+/2.p	Parts list : ELAW1040 - ELAW1040		30.01.2012	bdusold
=STL+/2.q	Parts list : ELAW1040 - ELAW1040		30.01.2012	bdusold
=STL+/2.r	Parts list : ELAW1040 - ELAW1040		30.01.2012	bdusold
=STL+/2.s	Parts list : ELAW1040 - ELAW1030		30.01.2012	bdusold
=STL+/2.t	Parts list : ELAW1030 - ELAW1030		30.01.2012	bdusold
=STL+/2.u	Parts list : ELAW1030 - ELAW1030		30.01.2012	bdusold
=STL+/2.v	Parts list : ELAW1030 - ELAW1030		30.01.2012	bdusold
=STL+/2.w	Parts list : ELAW1030 - ELAW2220		30.01.2012	bdusold
=STL+/2.x	Parts list : ELAW2220 - ELAW2220		30.01.2012	bdusold
=STL+/2.y	Parts list : ELAW2220 - ELAW2220		30.01.2012	bdusold
=STL+/2.z	Parts list : ELAW2220 - ELAW2220		30.01.2012	bdusold
=STL+/2.za	Parts list : ELAW2220 - ELAW1031		30.01.2012	bdusold
=STL+/3	Summarized parts list : EBHX3201 - ERIA8106L		30.01.2012	bdusold
=STL+/3.a	Summarized parts list : ERIA8206L - ESIA7322		31.01.2012	bdusold
=STL+/3.b	Summarized parts list : ESIA7331 - ESIS3202		31.01.2012	bdusold

Table of contents

Inhaltsverzeichnis_SAP_001

Page	Page description	Supplementary page field	Date	Edited by
=STL+/3.c	Summarized parts list : ESIS3504 - ESJQ3301		30.01.2012	bdusold
=STL+/3.d	Summarized parts list : ESJQ3302 - PILZ.787 750		30.01.2012	bdusold
=STL+/4	Summarized parts list : AED00273 - ELAW2220		23.01.2012	bdusold
=STL+/4.a	Summarized parts list : ELAW6041 - HYAG0184		30.01.2012	bdusold

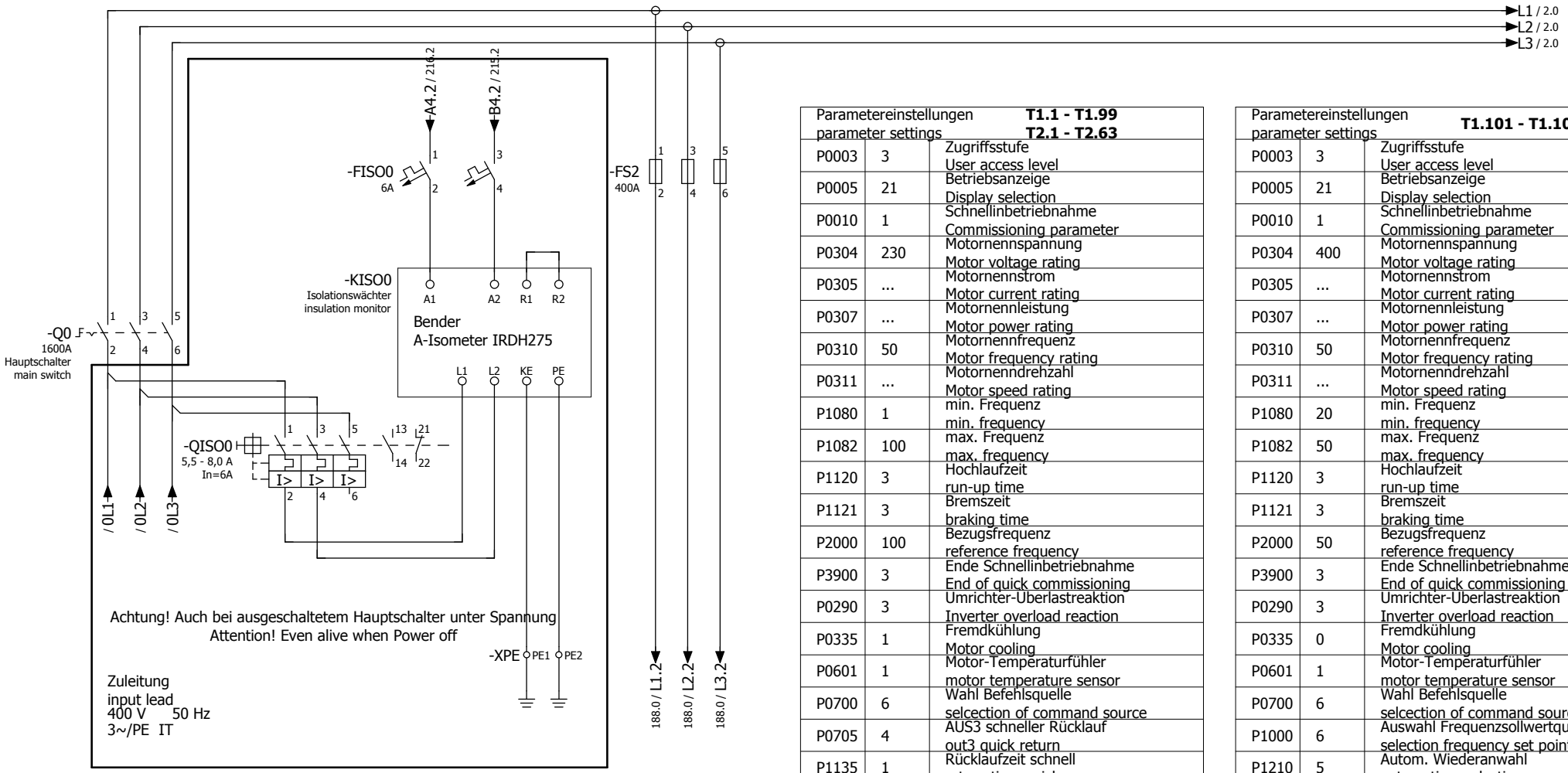

Leistung power	605 kW
Nennstrom nominal current	1600 A
Vorsicherung main fuse	1600 A
Zuleitung input lead	
Kurzschlußstrom short circuit current	Ik < 35 kA

14 — 11 /295.4
12
24 — 21 /295.3
22

Stromversorgung
Schiene 2

supply rail 2

Parametereinstellungen parameter settings		**T1.1 - T1.99** **T2.1 - T2.63**
P0003	3	Zugriffsstufe User access level
P0005	21	Betriebsanzeige Display selection
P0010	1	Schnellinbetriebnahme Commissioning parameter
P0304	230	Motornennspannung Motor voltage rating
P0305	...	Motornennstrom Motor current rating
P0307	...	Motornennleistung Motor power rating
P0310	50	Motornennfrequenz Motor frequency rating
P0311	...	Motornenndrehzahl Motor speed rating
P1080	1	min. Frequenz min. frequency
P1082	100	max. Frequenz max. frequency
P1120	3	Hochlaufzeit run-up time
P1121	3	Bremszeit braking time
P2000	100	Bezugsfrequenz reference frequency
P3900	3	Ende Schnellinbetriebnahme End of quick commissioning
P0290	3	Umrichter-Überlastreaktion Inverter overload reaction
P0335	1	Fremdkühlung Motor cooling
P0601	1	Motor-Temperaturfühler motor temperature sensor
P0700	6	Wahl Befehlsquelle selcection of command source
P0705	4	AUS3 schneller Rücklauf out3 quick return
P1135	1	Rücklaufzeit schnell return time quick
P1000	6	Auswahl Frequenzsollwertquelle selection frequency set point source
P1210	5	Autom. Wiederanwahl automatic reselection
P1237	5	Widerstandsbremsung dynamic braking
P1240	0	Konfiguration Vdc Regler configuration Vdc Controller
P0927	b::::::::	Eingabesperre lock entry

Parametereinstellungen parameter settings		**T1.101 - T1.102**
P0003	3	Zugriffsstufe User access level
P0005	21	Betriebsanzeige Display selection
P0010	1	Schnellinbetriebnahme Commissioning parameter
P0304	400	Motornennspannung Motor voltage rating
P0305	...	Motornennstrom Motor current rating
P0307	...	Motornennleistung Motor power rating
P0310	50	Motornennfrequenz Motor frequency rating
P0311	...	Motornenndrehzahl Motor speed rating
P1080	20	min. Frequenz min. frequency
P1082	50	max. Frequenz max. frequency
P1120	3	Hochlaufzeit run-up time
P1121	3	Bremszeit braking time
P2000	50	Bezugsfrequenz reference frequency
P3900	3	Ende Schnellinbetriebnahme End of quick commissioning
P0290	3	Umrichter-Überlastreaktion Inverter overload reaction
P0335	0	Fremdkühlung Motor cooling
P0601	1	Motor-Temperaturfühler motor temperature sensor
P0700	6	Wahl Befehlsquelle selcection of command source
P1000	6	Auswahl Frequenzsollwertquelle selection frequency set point source
P1210	5	Autom. Wiederanwahl automatic reselection
P0927	b::::::::	Eingabesperre lock entry

Duferco Clabecq

Management codes				Document identification				
5.3.0.0	CE	000	DW	QTPC	L04	ROSL	D	0049
System	Phase	Area	Typology	Project	Lot	Company	D/S	Number

=ALLG+/3.q

2

Rev.	Date	Description	Prepared	Checked	Approved	Date 30.01.2012 Dus	Duferco (SBM 2) Schaltschrank in place of	Replaced by

RÖSLER finding a better way ...

load circuit input lead

= ES
+ S

01-130070 00

Page 1
from 565

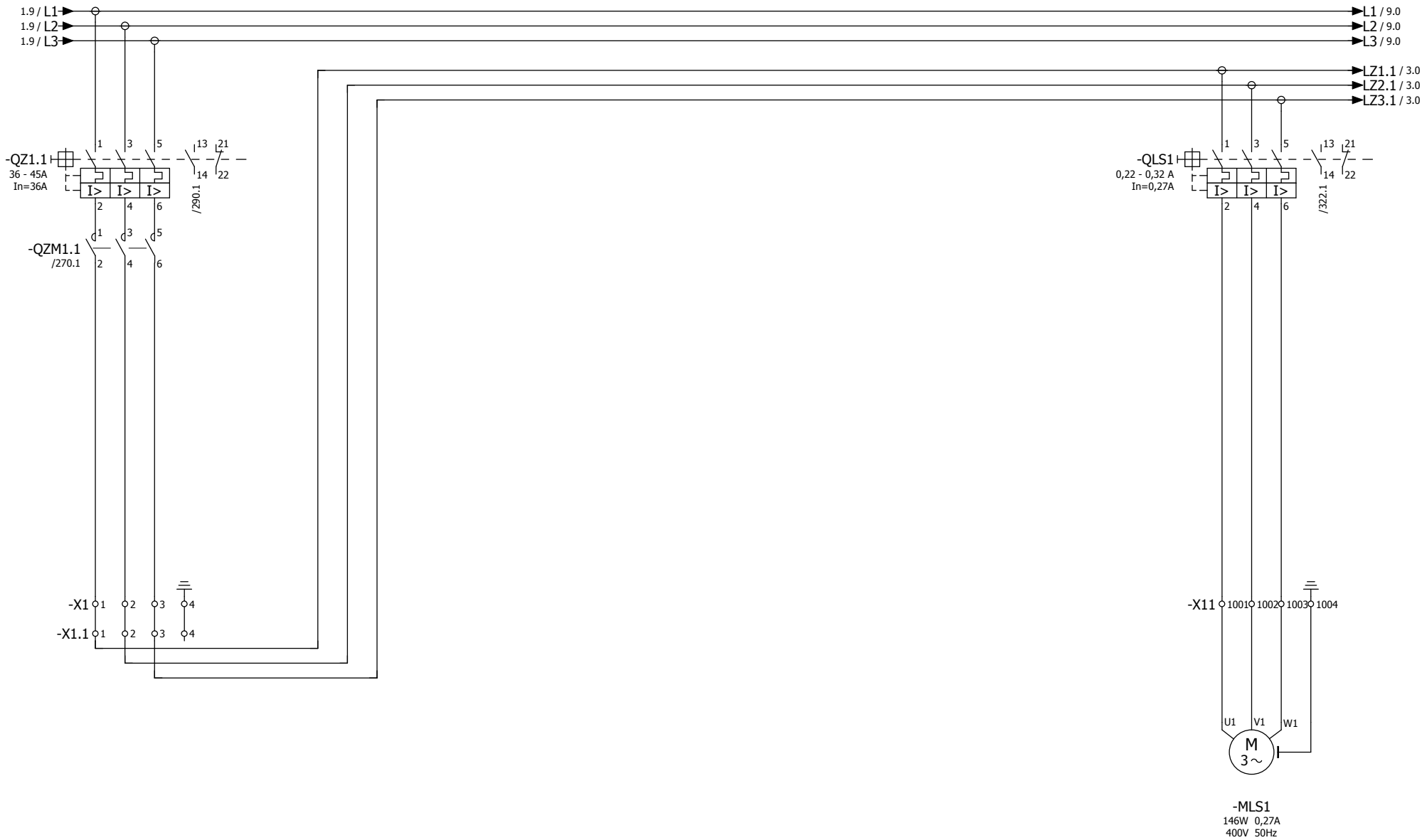

Zuleitung
Frequenzumrichter
Einlauf M1 - M6

input lead
frequency converter
inlet M1 - M6

Lüfter
Schaltschrank
ventilator
Enclosure

Duferco Clabecq

Management codes				Document identification				
5.3.0.0	CE	000	DW	QTPC	L04	ROSL	D	0049
System	Phase	Area	Typology	Project	Lot	Company	D/S	Number

1 3

Rev.	Date	Description	Prepared	Checked	Approved			
						Date	30.01.2012	
						Dus		

Duferco (SBM 2) Schaltschrank
in place of | Replaced by

RÖSLER finding a better way ...

load circuit
input lead FU M1 - M6

= ES
+ S

01-130070 00

Page 2
from 565

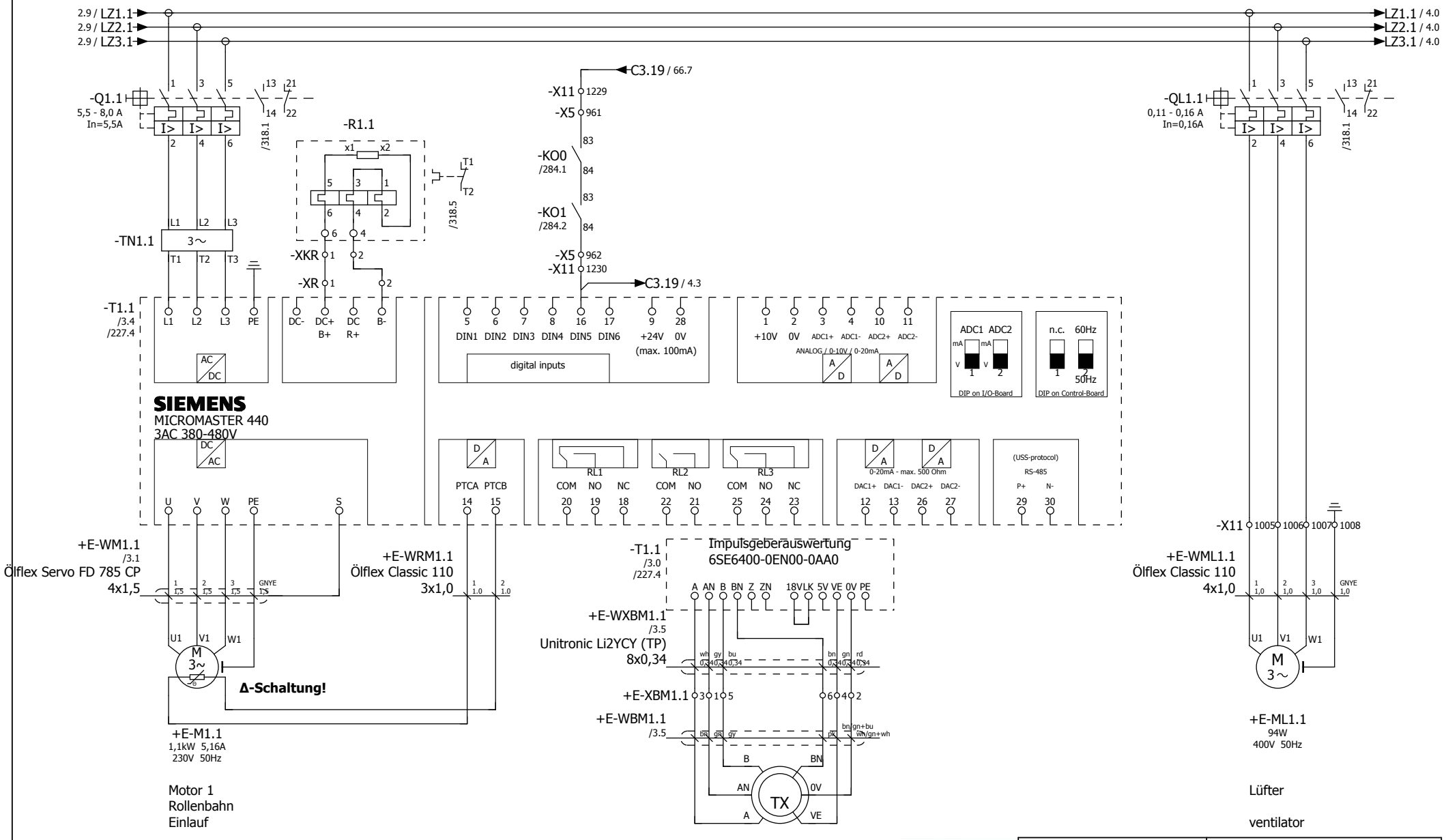

Management codes				Document identification				
5.3.0.0	CE	000	DW	QTPC	L04	ROSL	D	0049
System	Phase	Area	Typology	Project	Lot	Company	D/S	Number

Duferco Clabecq

Rev.	Date	Description	Prepared	Checked	Approved			
						Date	30.01.2012	
						Dus		

Duferco (SBM 2) Schaltschrank

in place of | Replaced by

RÖSLER finding a better way ...

load circuit
roll conveyor inlet M1

= ES
+ S

01-130070 00

Page 3
from 565

2 4

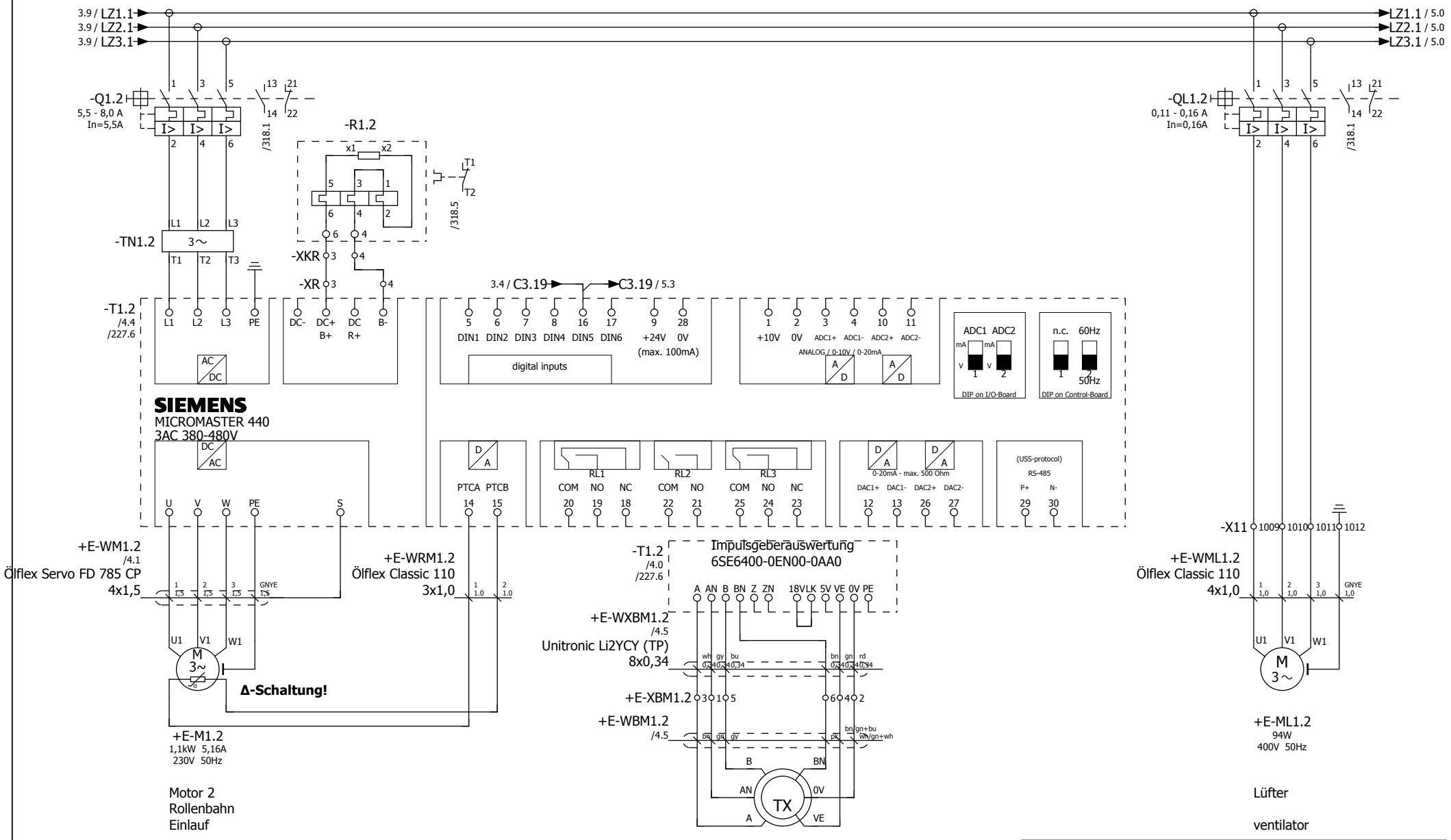

Duferco Clabecq

Management codes				Document identification				
5.3.0.0	CE	000	DW	QTPC	L04	ROSL	D	0049
System	Phase	Area	Typology	Project	Lot	Company	D/S	Number

3 5

Rev.	Date	Description	Prepared	Checked	Approved			
						Date	30.01.2012	
						Dus		

Duferco (SBM 2) Schaltschrank

in place of | Replaced by

RÖSLER finding a better way ...

load circuit
roll conveyor inlet M2

= ES
+ S

01-130070 00

Page 4
from 565

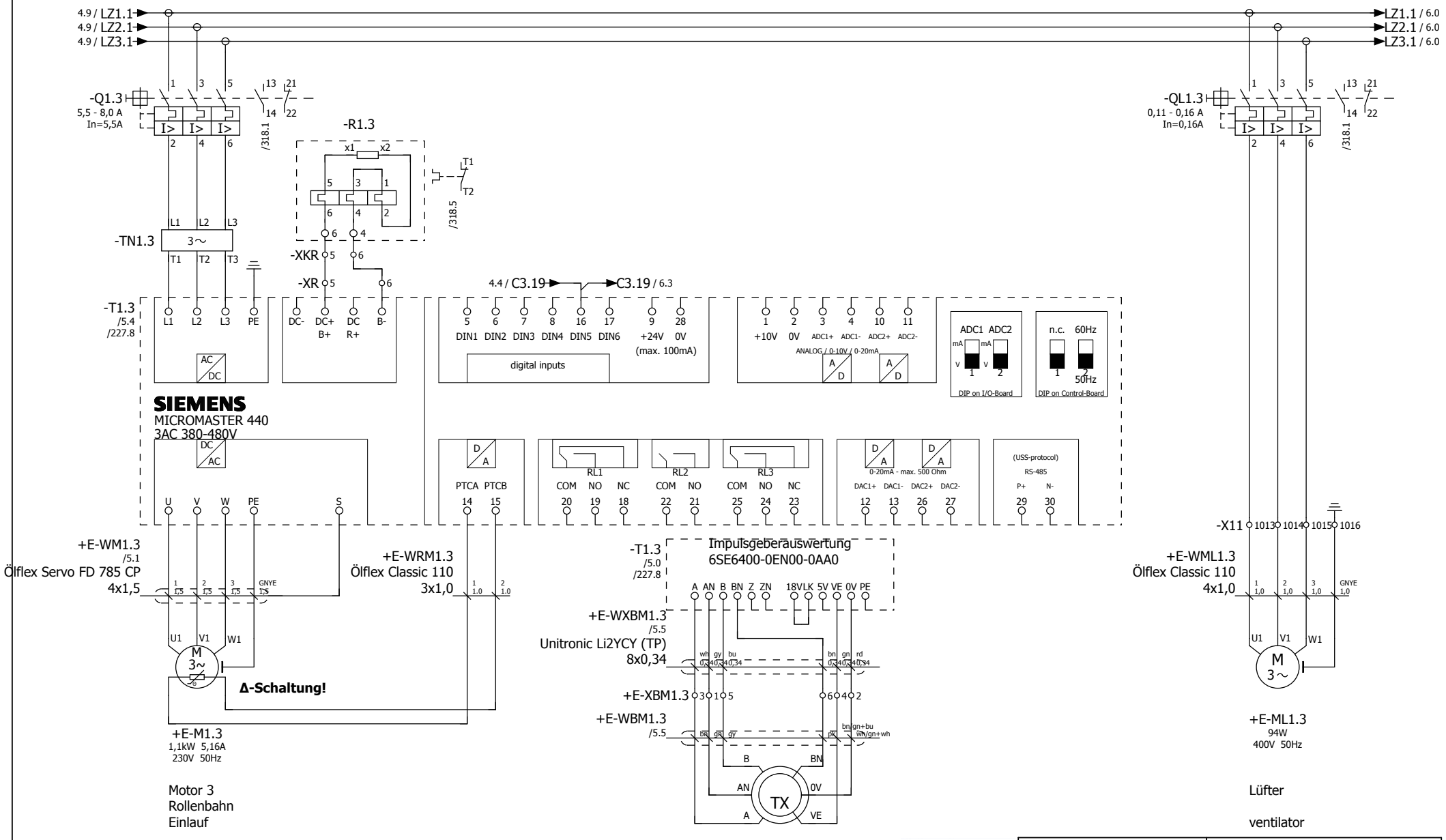

Duferco Clabecq

Management codes				Document identification				
5.3.0.0	CE	000	DW	QTPC	L04	ROSL	D	0049
System	Phase	Area	Typology	Project	Lot	Company	D/S	Number

						Date	30.01.2012	
						Dus		
Rev.	Date	Description	Prepared	Checked	Approved			

Duferco (SBM 2) Schaltschrank

in place of | Replaced by

RÖSLER finding a better way ...

load circuit
roll conveyor inlet M3

= ES
+ S

01-130070 00

Page 5
from 565

4 6

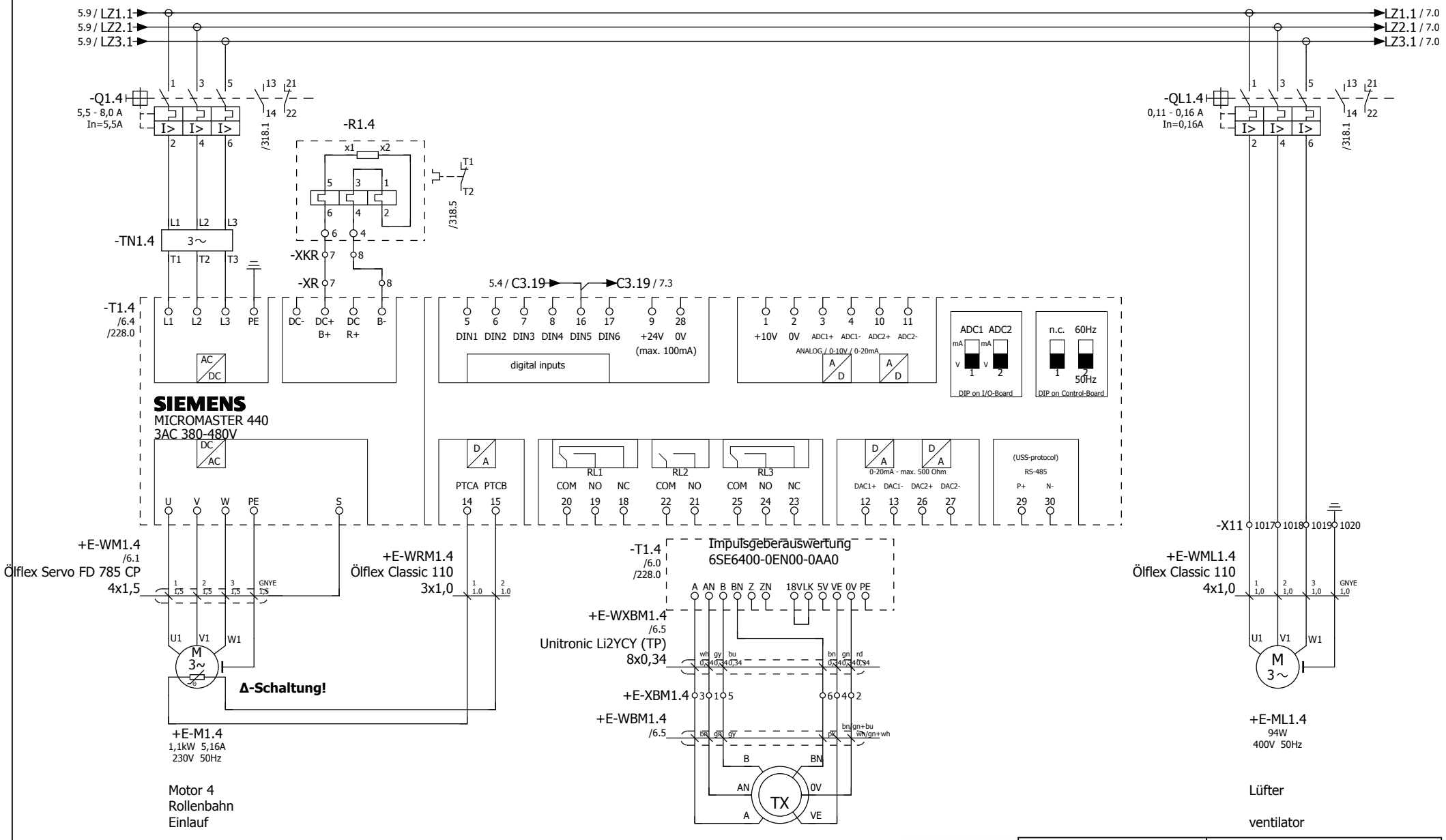

Duferco Clabecq

Management codes				Document identification				
5.3.0.0	CE	000	DW	QTPC	L04	ROSL	D	0049
System	Phase	Area	Typology	Project	Lot	Company	D/S	Number

						Date	30.01.2012	
						Dus		
Rev.	Date	Description	Prepared	Checked	Approved			

Duferco (SBM 2) Schaltschrank

in place of | Replaced by

RÖSLER finding a better way ...

load circuit
roll conveyor inlet M4

= ES
+ S

01-130070 00

Page 6
from 565

5 7

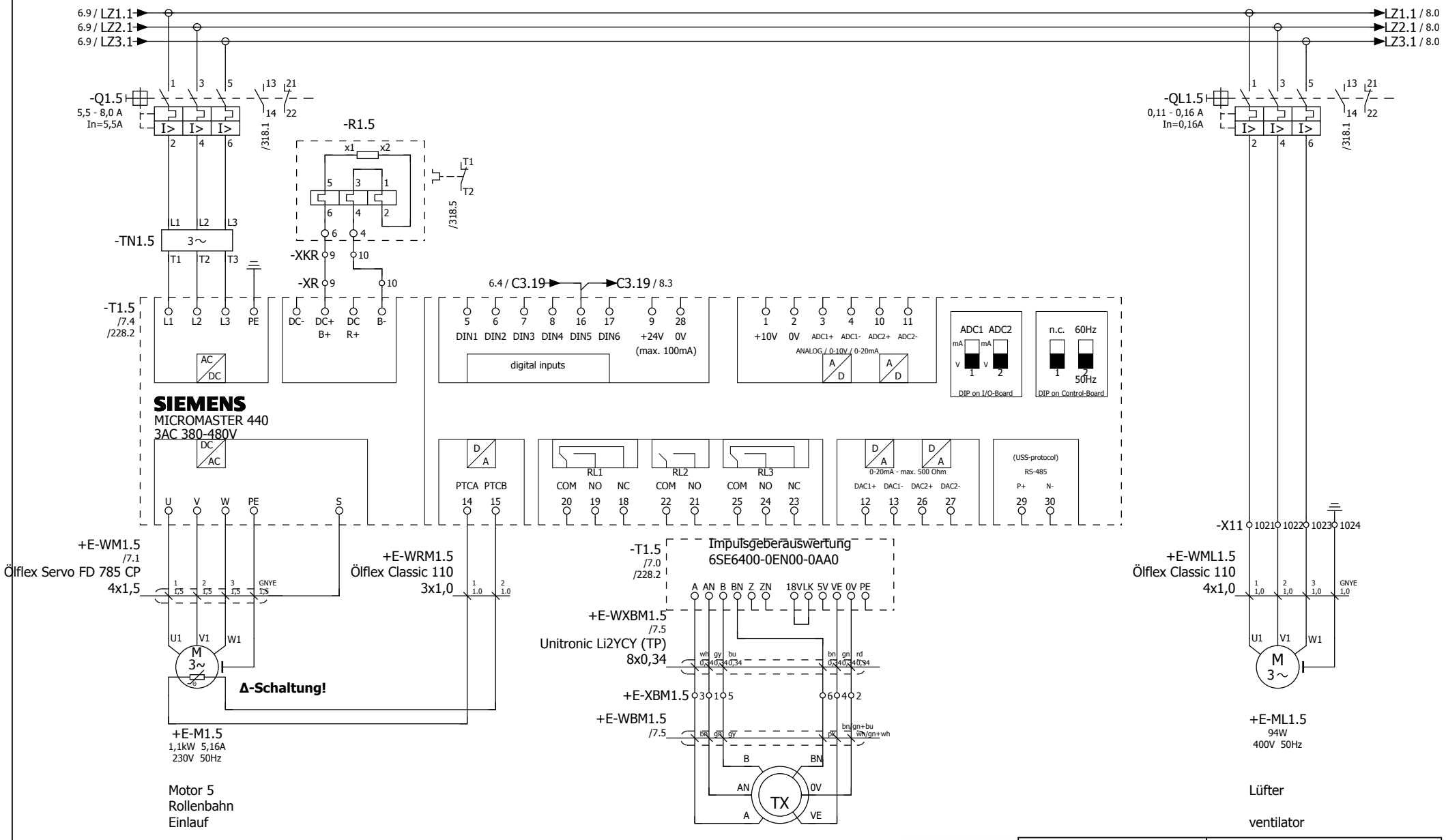

Management codes				Document identification				
5.3.0.0	CE	000	DW	QTPC	L04	ROSL	D	0049
System	Phase	Area	Typology	Project	Lot	Company	D/S	Number

Duferco Clabecq

						Date	30.01.2012	
						Dus		
Rev.	Date	Description	Prepared	Checked	Approved			

Duferco (SBM 2) Schaltschrank

in place of | Replaced by

RÖSLER finding a better way ...

load circuit
roll conveyor inlet M5

= ES
+ S

01-130070 00

Page 7
from 565

6 8

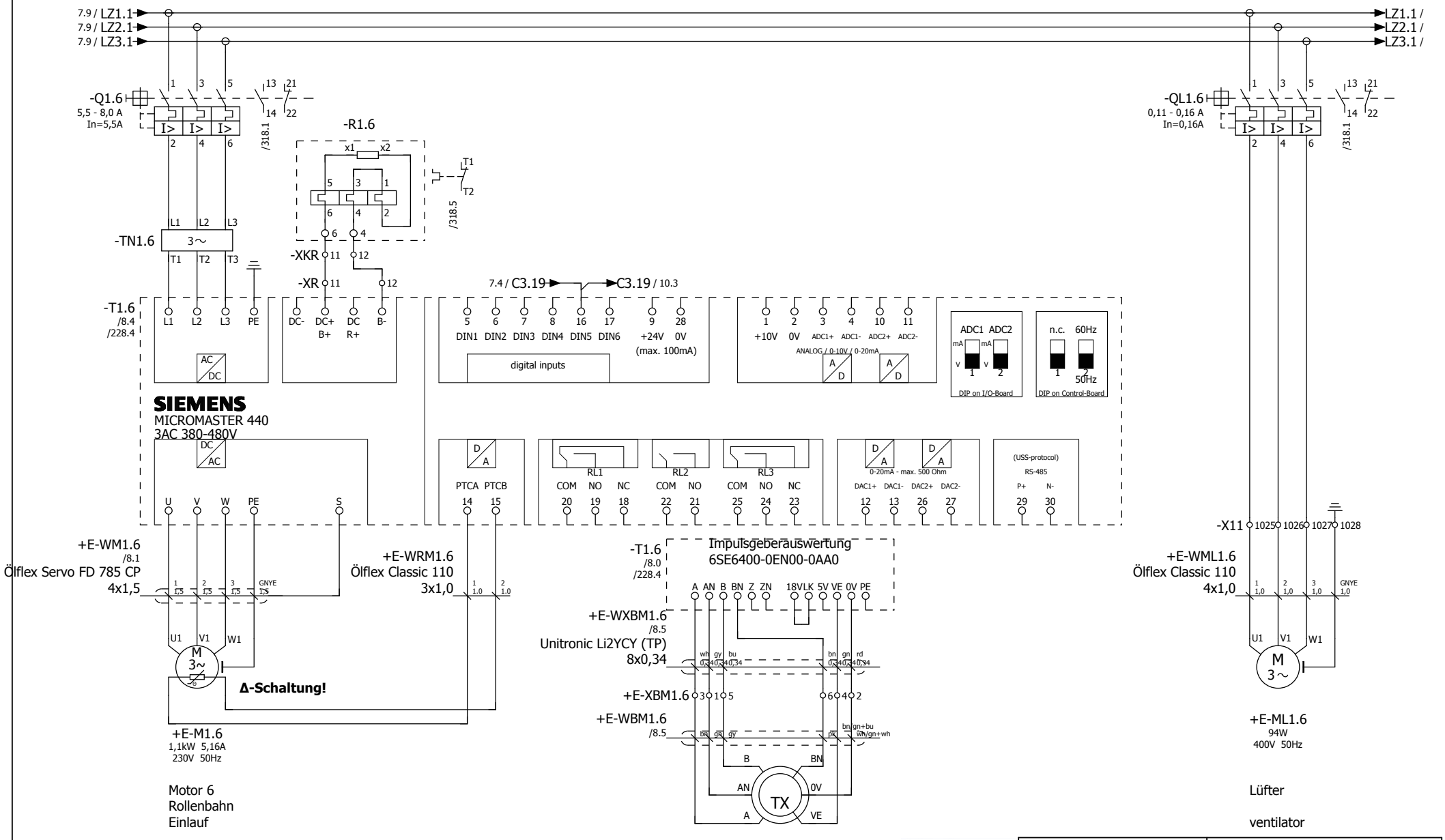

Management codes				Document identification				
5.3.0.0	CE	000	DW	QTPC	L04	ROSL	D	0049
System	Phase	Area	Typology	Project	Lot	Company	D/S	Number

Duferco Clabecq

Rev.	Date	Description	Prepared	Checked	Approved			
						Date	30.01.2012	
						Dus		

Duferco (SBM 2) Schaltschrank

in place of | Replaced by

RÖSLER finding a better way ...

load circuit
roll conveyor inlet M6

= ES
+ S

01-130070 00

Page 8
from 565

Zuleitung
Frequenzumrichter
Einlauf M7 - M12

input lead
frequency converter
inlet M7 - M12

Duferco Clabecq

Management codes				Document identification				
5.3.0.0	CE	000	DW	QTPC	L04	ROSL	D	0049
System	Phase	Area	Typology	Project	Lot	Company	D/S	Number

Rev.	Date	Description	Prepared	Checked	Approved			
						Date	30.01.2012	
						Dus		

Duferco (SBM 2) Schaltschrank

in place of | Replaced by

RÖSLER finding a better way ...

load circuit
input lead FU M7 - M12

= ES
+ S

01-130070 00

Page 9
from 565

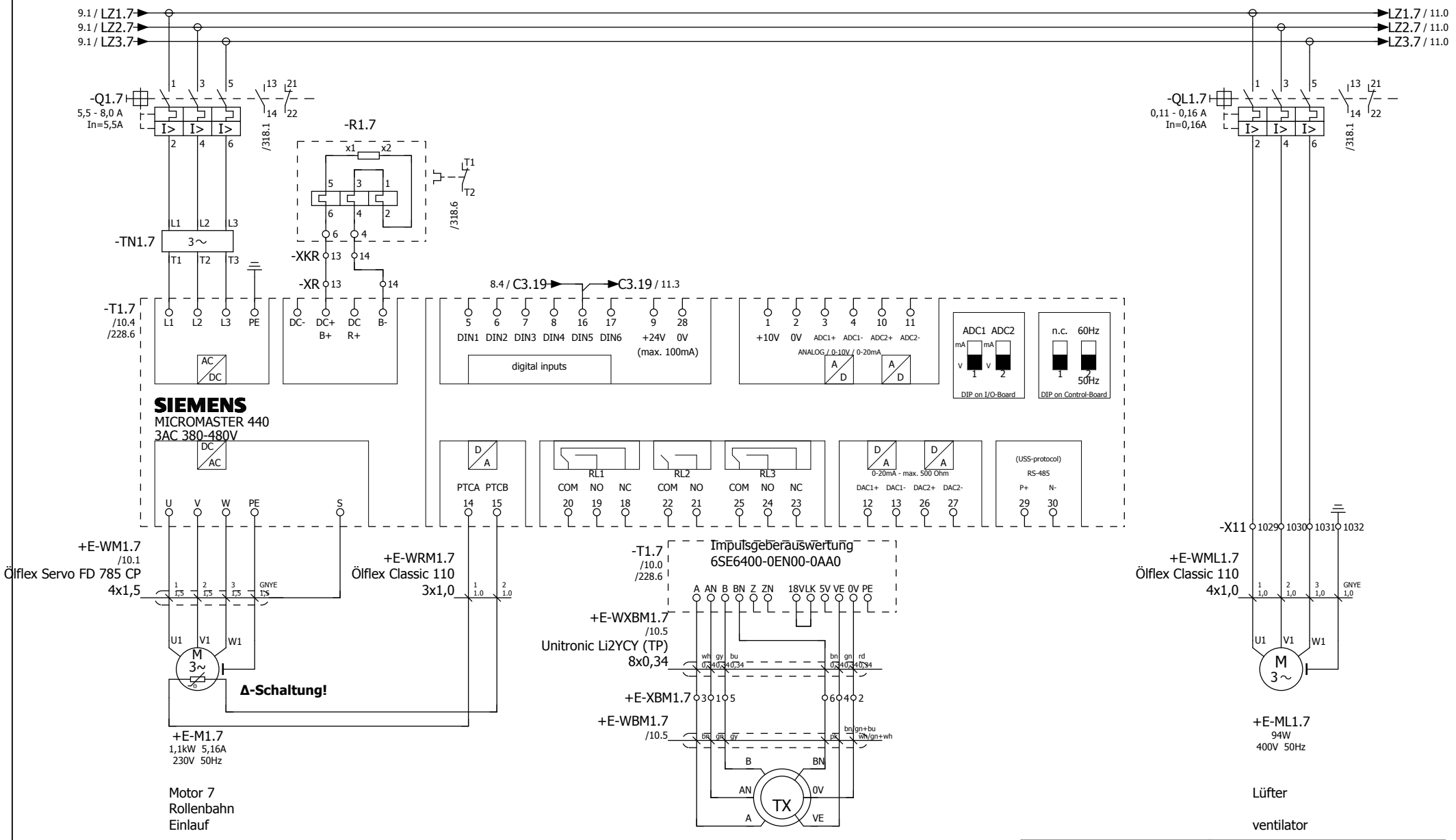

Management codes				Document identification				
5.3.0.0	CE	000	DW	QTPC	L04	ROSL	D	0049
System	Phase	Area	Typology	Project	Lot	Company	D/S	Number

Duferco Clabecq

9 11

Rev.	Date	Description	Prepared	Checked	Approved			
						Date	30.01.2012	
						Dus		

Duferco (SBM 2) Schaltschrank

in place of | Replaced by

RÖSLER finding a better way ...

load circuit
roll conveyor inlet M7

= ES
+ S

01-130070 00

Page 10
from 565

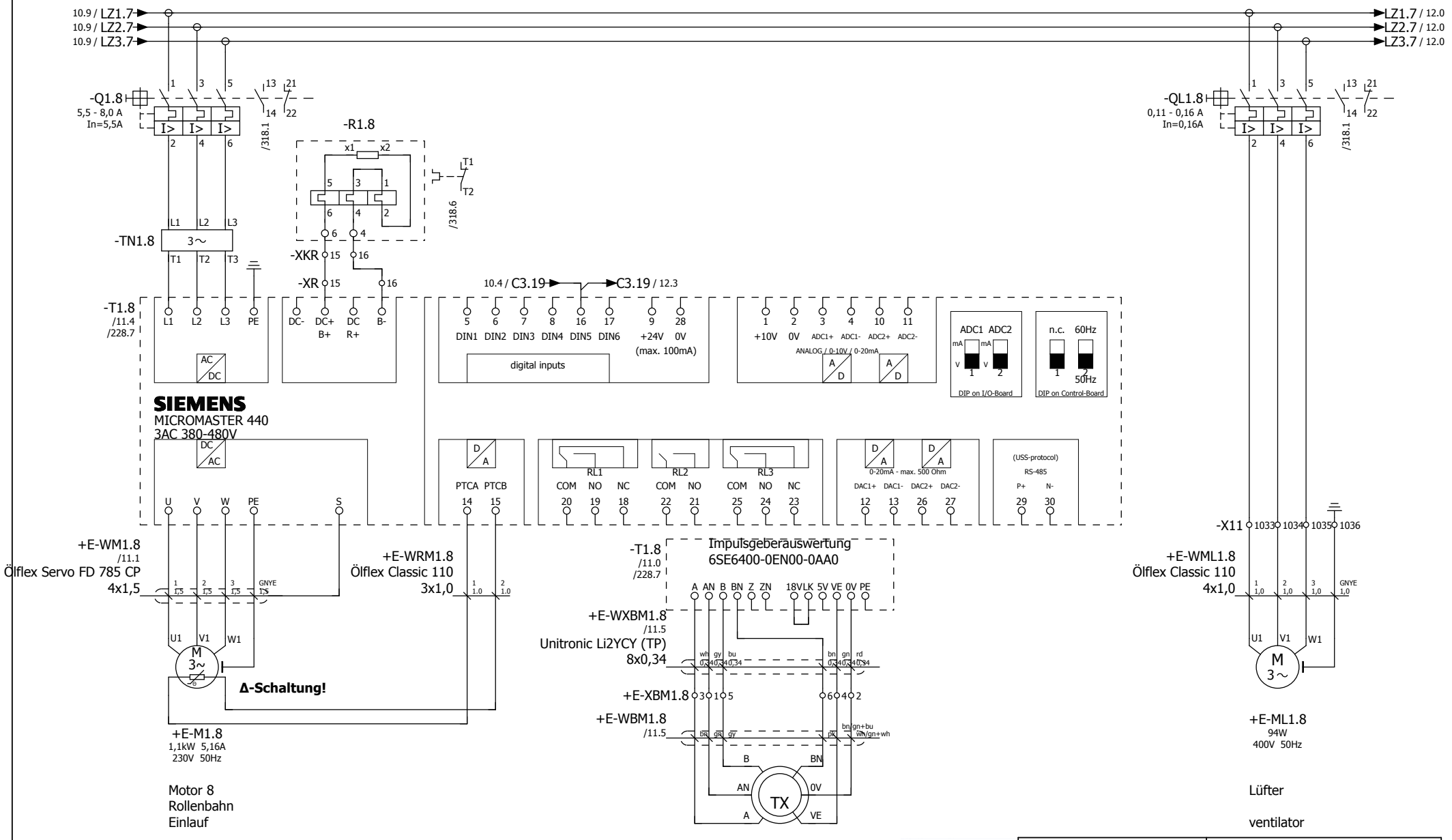

Duferco Clabecq

Management codes				Document identification				
5.3.0.0	CE	000	DW	QTPC	L04	ROSL	D	0049
System	Phase	Area	Typology	Project	Lot	Company	D/S	Number

10 12

						Date	30.01.2012	
						Dus		
Rev.	Date	Description	Prepared	Checked	Approved			

Duferco (SBM 2) Schaltschrank

in place of | Replaced by

RÖSLER finding a better way ...

load circuit
roll conveyor inlet M8

= ES
+ S

01-130070 00

Page 11
from 565

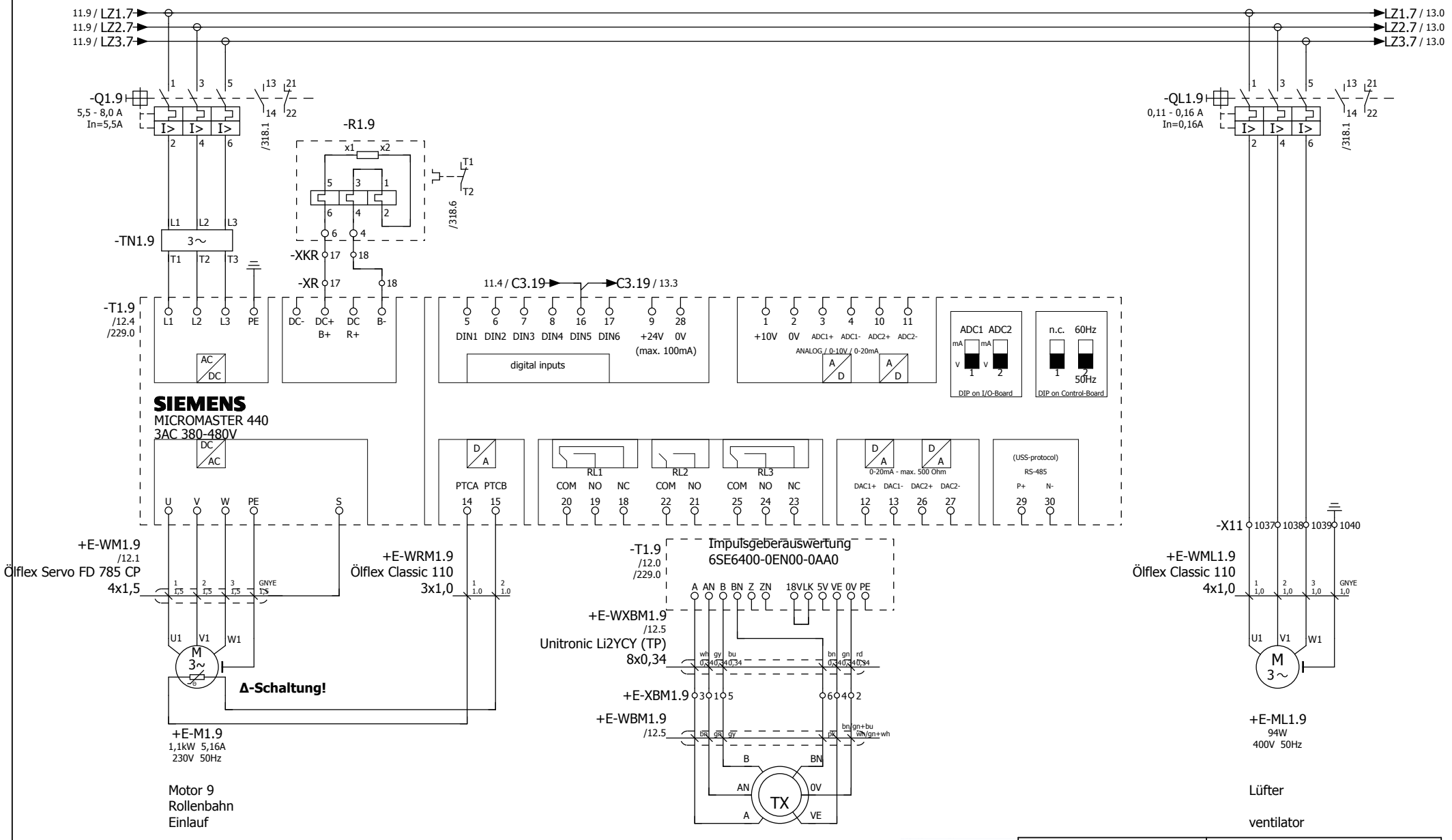

Management codes				Document identification				
5.3.0.0	CE	000	DW	QTPC	L04	ROSL	D	0049
System	Phase	Area	Typology	Project	Lot	Company	D/S	Number

Duferco Clabecq

11 13

Rev.	Date	Description	Prepared	Checked	Approved			
						Date	30.01.2012	
						Dus		

Duferco (SBM 2) Schaltschrank

in place of | Replaced by

RÖSLER finding a better way ...

load circuit
roll conveyor inlet M9

= ES
+ S

01-130070 00

Page 12
from 565

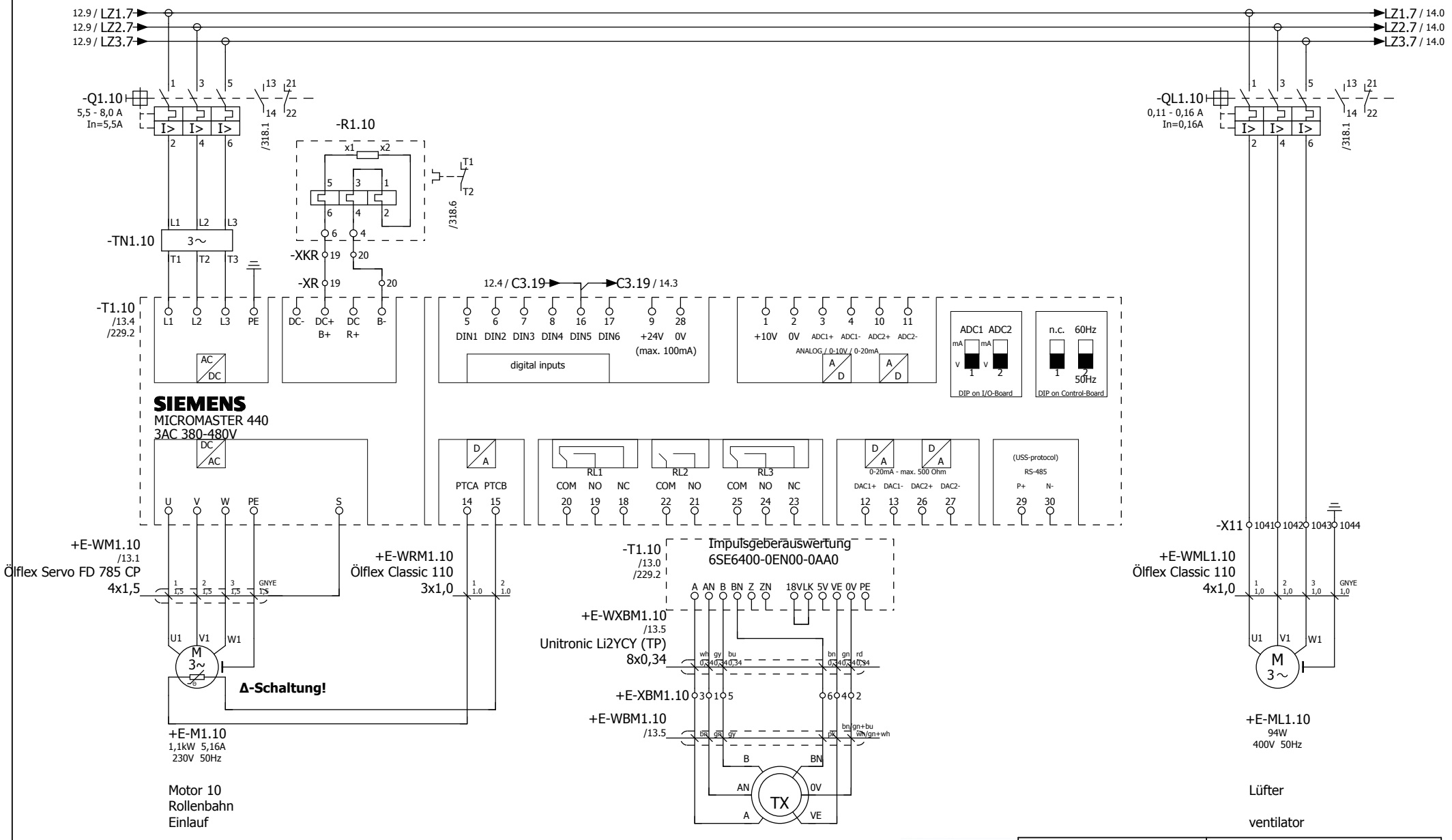

Management codes				Document identification				
5.3.0.0	CE	000	DW	QTPC	L04	ROSL	D	0049
System	Phase	Area	Typology	Project	Lot	Company	D/S	Number

Duferco Clabecq

12 14

Rev.	Date	Description	Prepared	Checked	Approved			
						Date	30.01.2012	
						Dus		

Duferco (SBM 2) Schaltschrank

in place of | Replaced by

RÖSLER finding a better way ...

load circuit
roll conveyor inlet M10

= ES
+ S

01-130070 00

Page 13
from 565

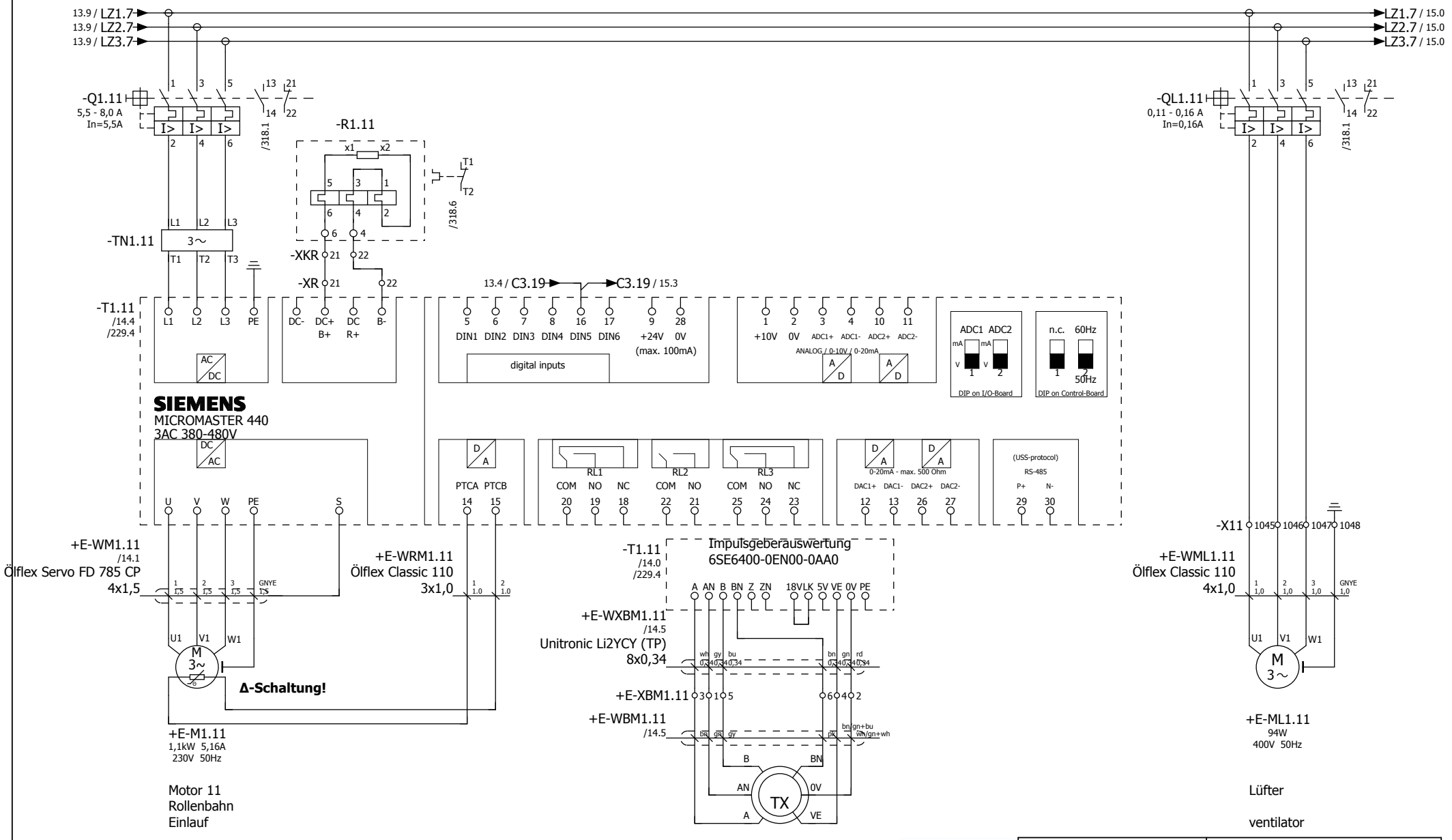

13

15

Management codes				Document identification				
5.3.0.0	CE	000	DW	QTPC	L04	ROSL	D	0049
System	Phase	Area	Typology	Project	Lot	Company	D/S	Number

Duferco Clabecq

						Date	30.01.2012	
						Dus		
Rev.	Date	Description	Prepared	Checked	Approved			

Duferco (SBM 2) Schaltschrank

in place of | Replaced by

RÖSLER finding a better way ...

load circuit
roll conveyor inlet M11

= ES
+ S

01-130070 00

Page 14
from 565

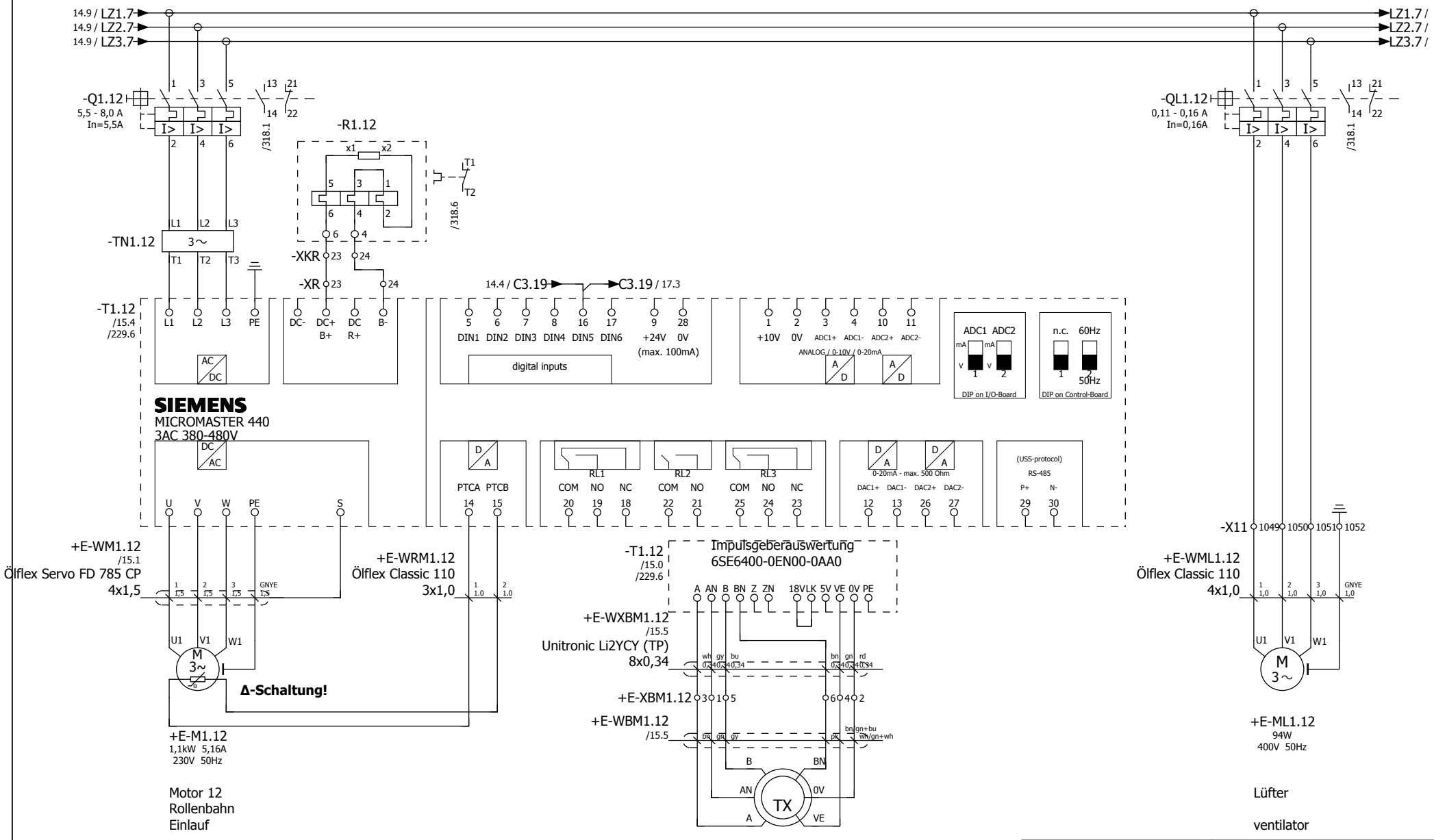

14

16

Duferco Clabecq

Management codes				Document identification				
5.3.0.0	CE	000	DW	QTPC	L04	ROSL	D	0049
System	Phase	Area	Typology	Project	Lot	Company	D/S	Number

						Date	30.01.2012	Duferco (SBM 2) Schaltschrank	
						Dus			
Rev.	Date	Description	Prepared	Checked	Approved			in place of	Replaced by

RÖSLER finding a better way ...

load circuit
roll conveyor inlet M12

= ES
+ S

01-130070 00

Page 15
from 565

Zuleitung
Frequenzumrichter
Einlauf M13 - M18

input lead
frequency converter
inlet M13 - M18

Duferco Clabecq

Management codes				Document identification				
5.3.0.0	CE	000	DW	QTPC	L04	ROSL	D	0049
System	Phase	Area	Typology	Project	Lot	Company	D/S	Number

15 17

Rev.	Date	Description	Prepared	Checked	Approved		
						Date	30.01.2012
						Dus	

Duferco (SBM 2) Schaltschrank
in place of | Replaced by

RÖSLER finding a better way ...

load circuit
input lead FU M13 - M18

= ES
+ S

01-130070 00

Page 16
from 565

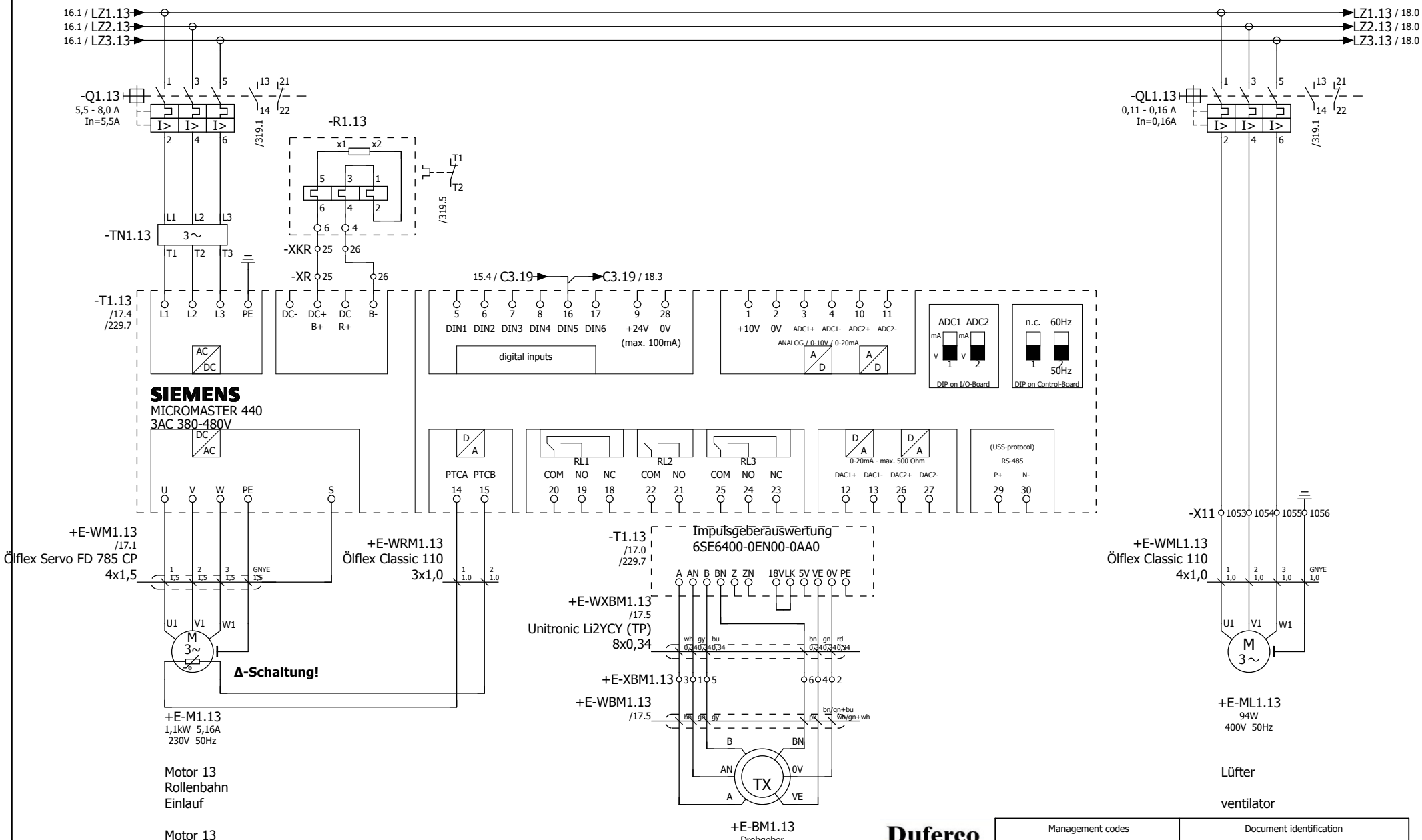

Management codes				Document identification				
5.3.0.0	CE	000	DW	QTPC	L04	ROSL	D	0049
System	Phase	Area	Typology	Project	Lot	Company	D/S	Number

Duferco Clabecq

16 18

Rev.	Date	Description	Prepared	Checked	Approved			
						Date	30.01.2012	
						Dus		

Duferco (SBM 2) Schaltschrank

in place of | Replaced by

RÖSLER finding a better way ...

load circuit
roll conveyor inlet M13

= ES
+ S

01-130070 00

Page 17
from 565

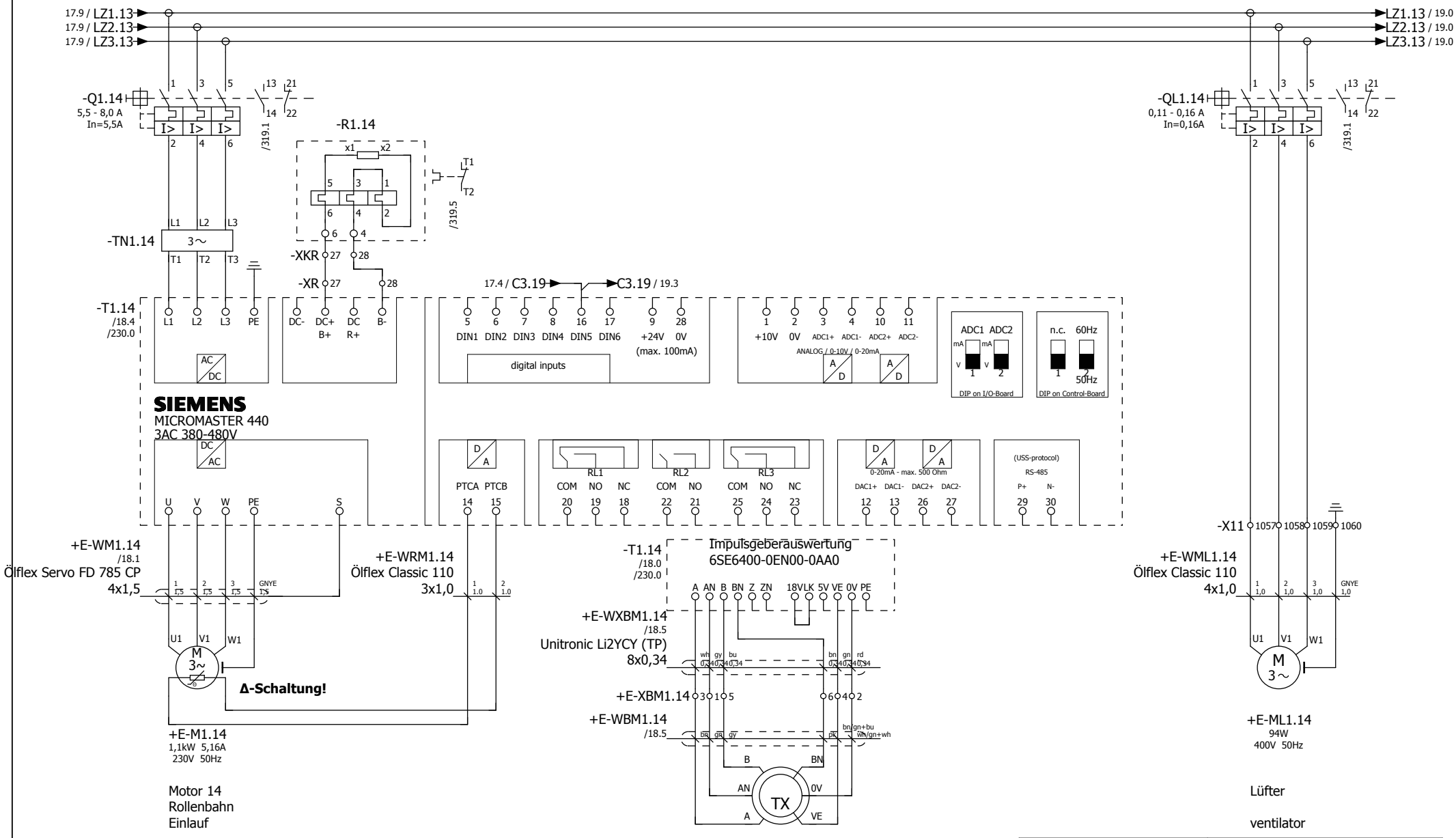

17

19

Management codes				Document identification				
5.3.0.0	CE	000	DW	QTPC	L04	ROSL	D	0049
System	Phase	Area	Typology	Project	Lot	Company	D/S	Number

Duferco Clabecq

						Date	30.01.2012	
						Dus		
Rev.	Date	Description	Prepared	Checked	Approved			

Duferco (SBM 2) Schaltschrank

in place of | Replaced by

RÖSLER finding a better way ...

load circuit
roll conveyor inlet M14

= ES
+ S

01-130070 00

Page 18
from 565

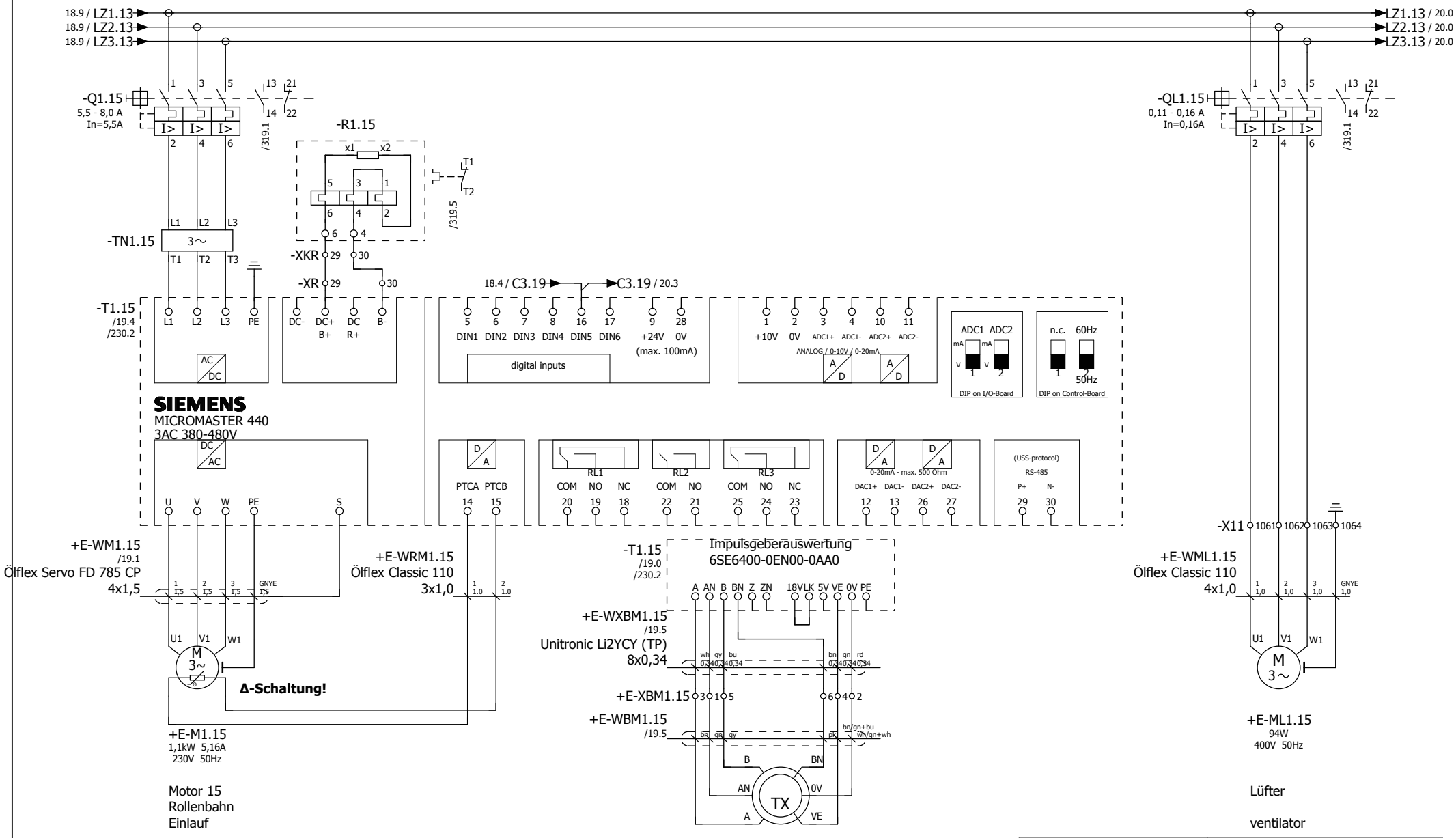

18

20

Management codes				Document identification				
5.3.0.0	CE	000	DW	QTPC	L04	ROSL	D	0049
System	Phase	Area	Typology	Project	Lot	Company	D/S	Number

Duferco Clabecq

						Date	30.01.2012	
						Dus		
Rev.	Date	Description	Prepared	Checked	Approved			

Duferco (SBM 2) Schaltschrank

in place of | Replaced by

RÖSLER finding a better way ...

load circuit
roll conveyor inlet M15

= ES
+ S

01-130070 00

Page 19
from 565

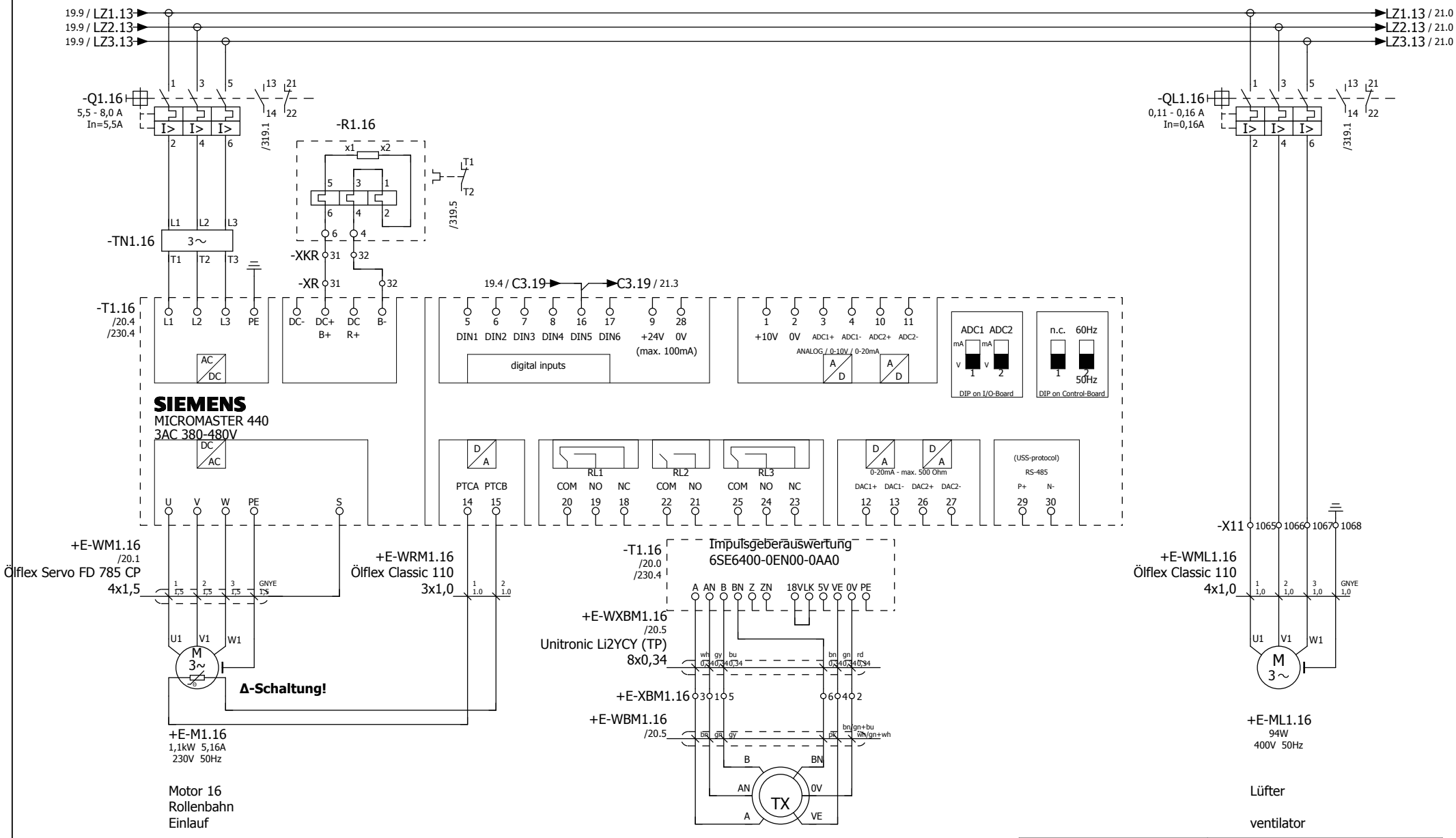

Management codes				Document identification				
5.3.0.0	CE	000	DW	QTPC	L04	ROSL	D	0049
System	Phase	Area	Typology	Project	Lot	Company	D/S	Number

Duferco Clabecq

19 21

Rev.	Date	Description	Prepared	Checked	Approved			
						Date	30.01.2012	
						Dus		

Duferco (SBM 2) Schaltschrank

in place of | Replaced by

RÖSLER finding a better way ...

load circuit
roll conveyor inlet M16

= ES
+ S

01-130070 00

Page 20
from 565

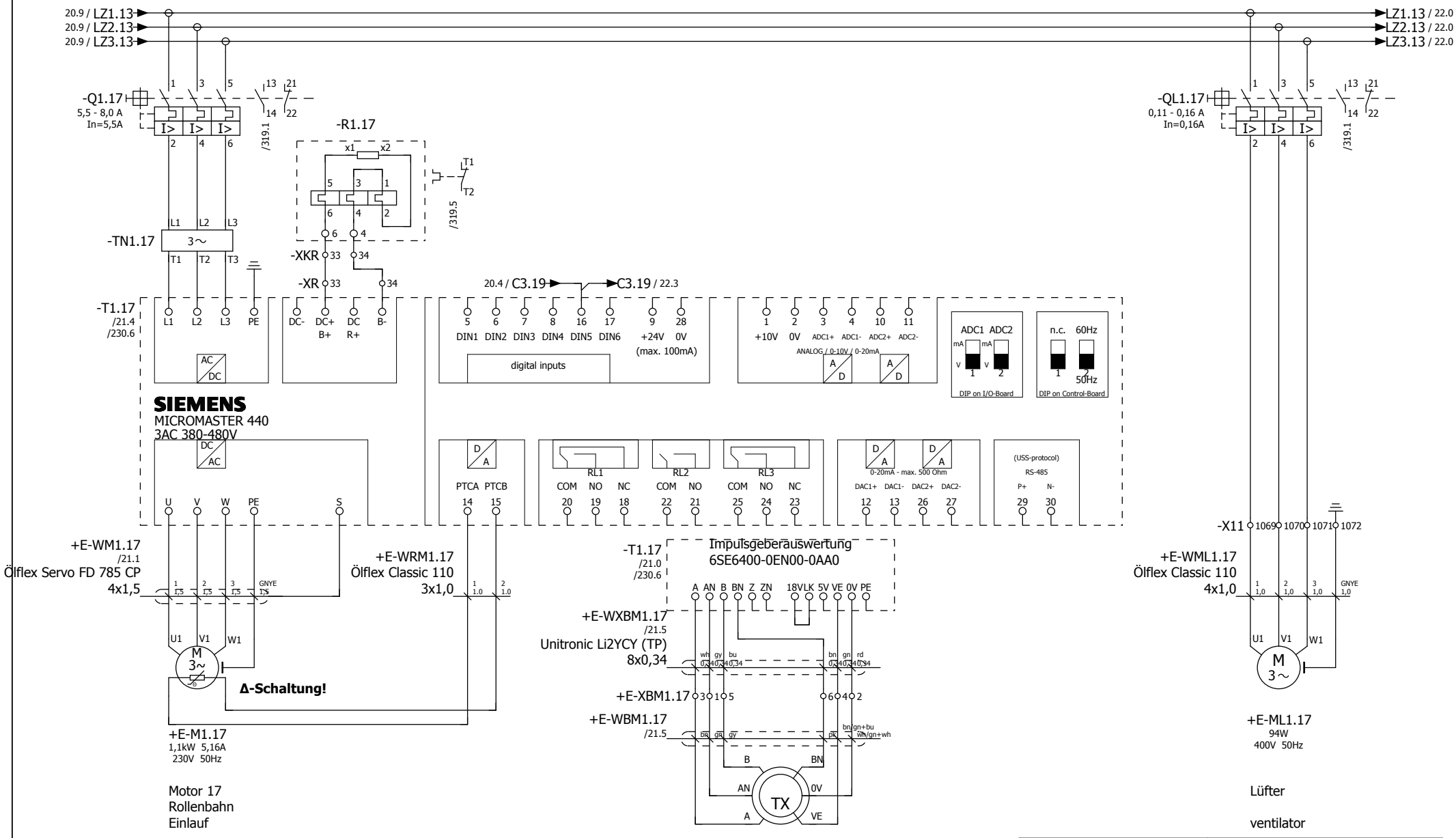

Management codes				Document identification				
5.3.0.0	CE	000	DW	QTPC	L04	ROSL	D	0049
System	Phase	Area	Typology	Project	Lot	Company	D/S	Number

Duferco Clabecq

20 22

Rev.	Date	Description	Prepared	Checked	Approved	Date 30.01.2012	Duferco (SBM 2) Schaltschrank	RÖSLER finding a better way ...	load circuit roll conveyor inlet M17	= ES	01-130070 00	Page 21
						Dus				+ S		from 565
							in place of	Replaced by				

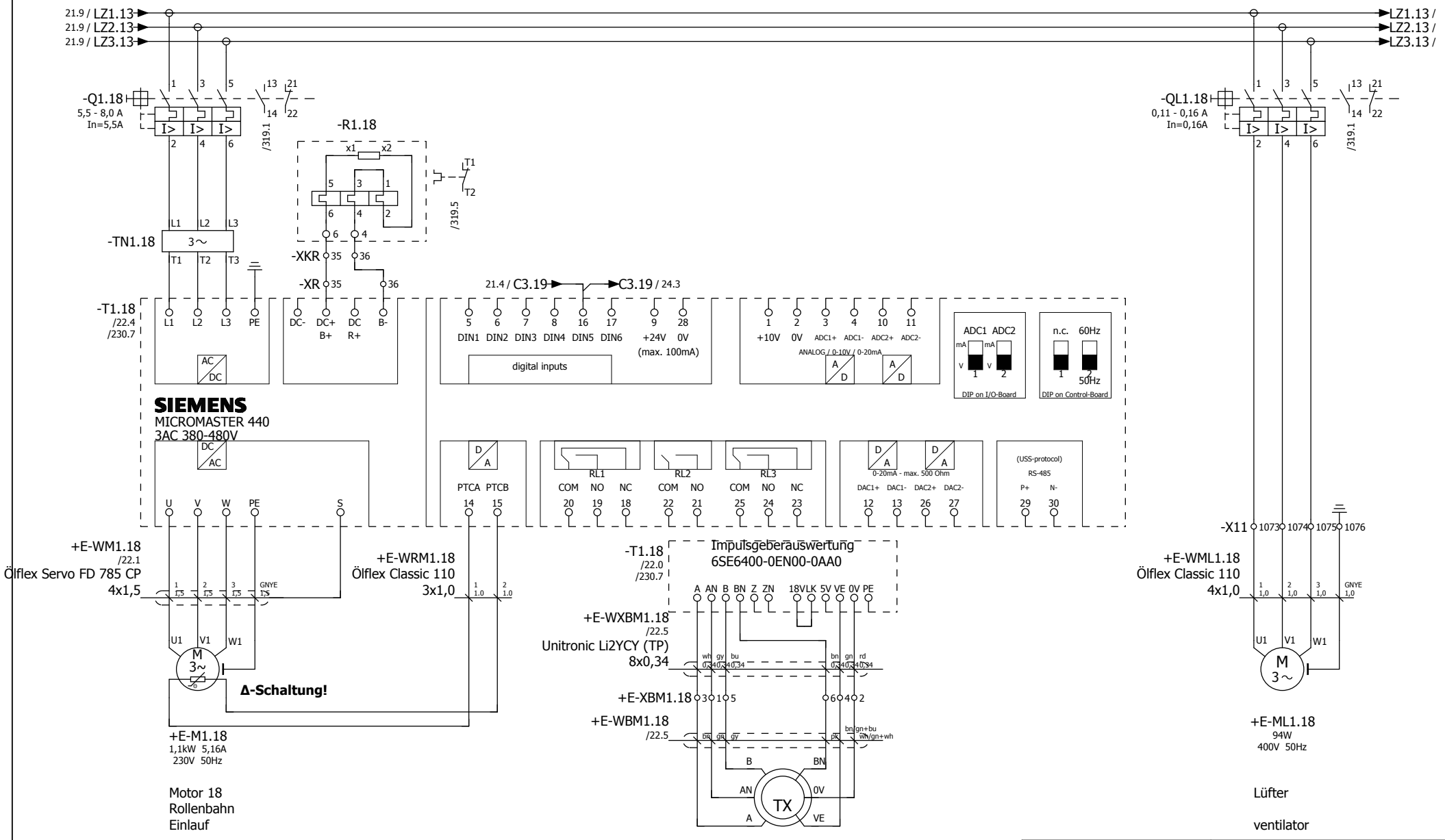

Management codes				Document identification				
5.3.0.0	CE	000	DW	QTPC	L04	ROSL	D	0049
System	Phase	Area	Typology	Project	Lot	Company	D/S	Number

21 23

Rev.	Date	Description	Prepared	Checked	Approved			
						Date	30.01.2012	
						Dus		

Duferco (SBM 2) Schaltschrank

in place of | Replaced by

RÖSLER finding a better way ...

load circuit
roll conveyor inlet M18

= ES
+ S

01-130070 00

Page 22
from 565

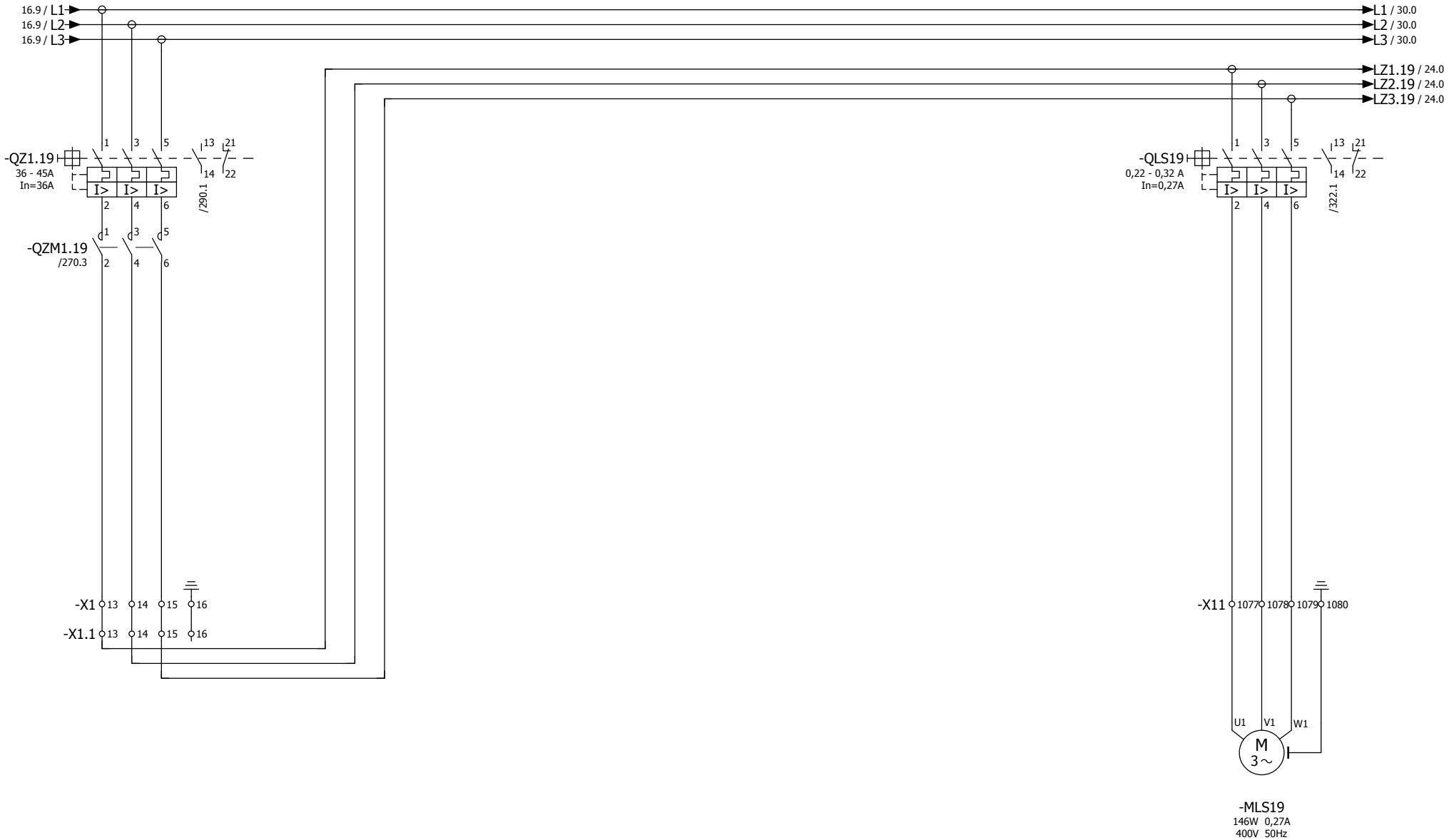

Zuleitung
Frequenzumrichter
Einlauf M19 - M24

input lead
frequency converter
inlet M19 - M24

Lüfter
Schaltschrank
ventilator
Enclosure

Duferco Clabecq

Management codes				Document identification				
5.3.0.0	CE	000	DW	QTPC	L04	ROSL	D	0049
System	Phase	Area	Typology	Project	Lot	Company	D/S	Number

22 24

Rev.	Date	Description	Prepared	Checked	Approved		
						Date	30.01.2012
						Dus	

Duferco (SBM 2) Schaltschrank
in place of | Replaced by

RÖSLER finding a better way ...

load circuit
input lead FU M19 - M24

= ES
+ S

01-130070 00

Page 23
from 565

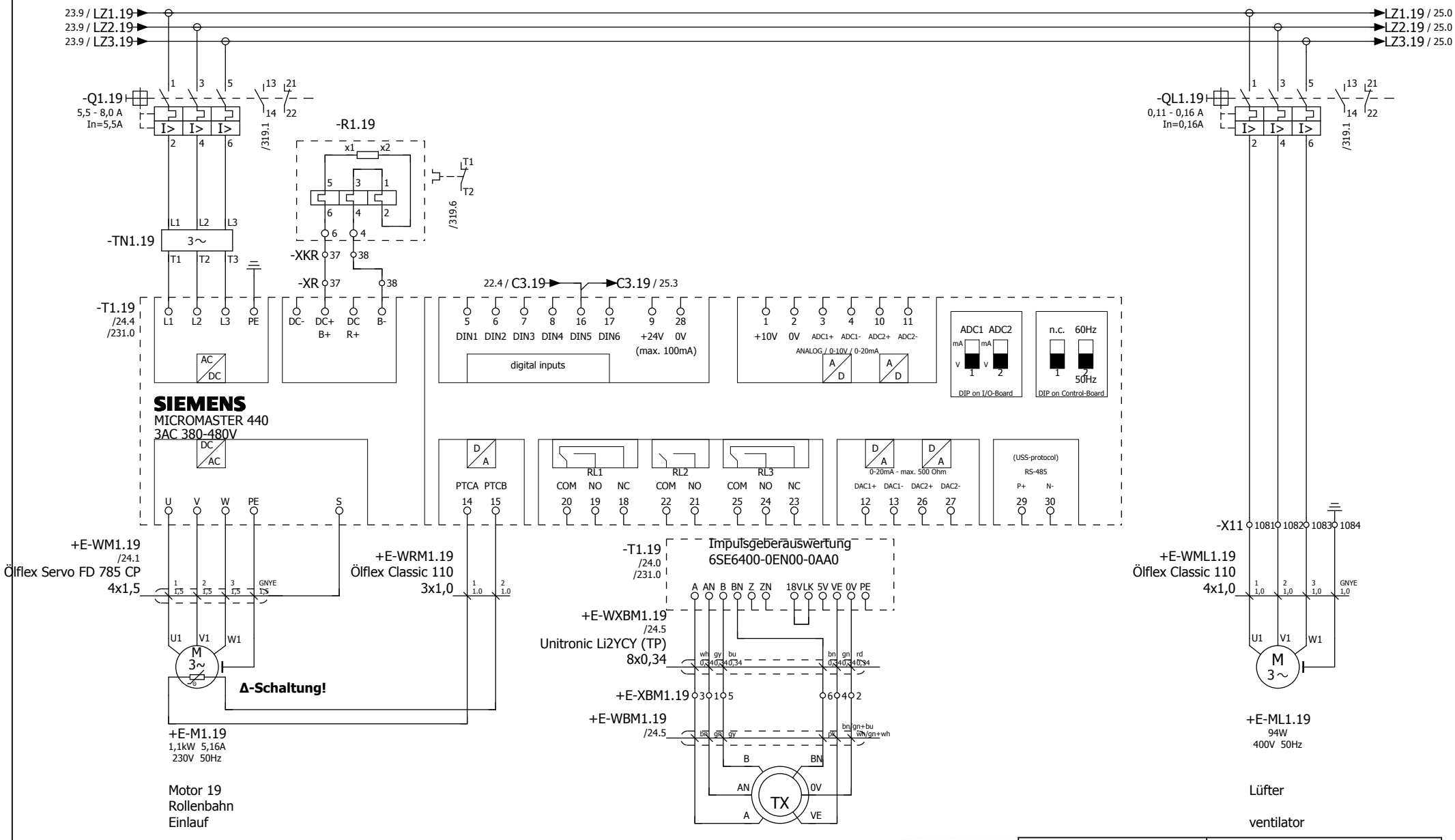

Duferco Clabecq

Management codes				Document identification				
5.3.0.0	CE	000	DW	QTPC	L04	ROSL	D	0049
System	Phase	Area	Typology	Project	Lot	Company	D/S	Number

23 25

						Date	30.01.2012	
						Dus		
Rev.	Date	Description	Prepared	Checked	Approved			

Duferco (SBM 2) Schaltschrank

in place of | Replaced by

RÖSLER finding a better way ...

load circuit
roll conveyor inlet M19

= ES
+ S

01-130070 00

Page 24
from 565

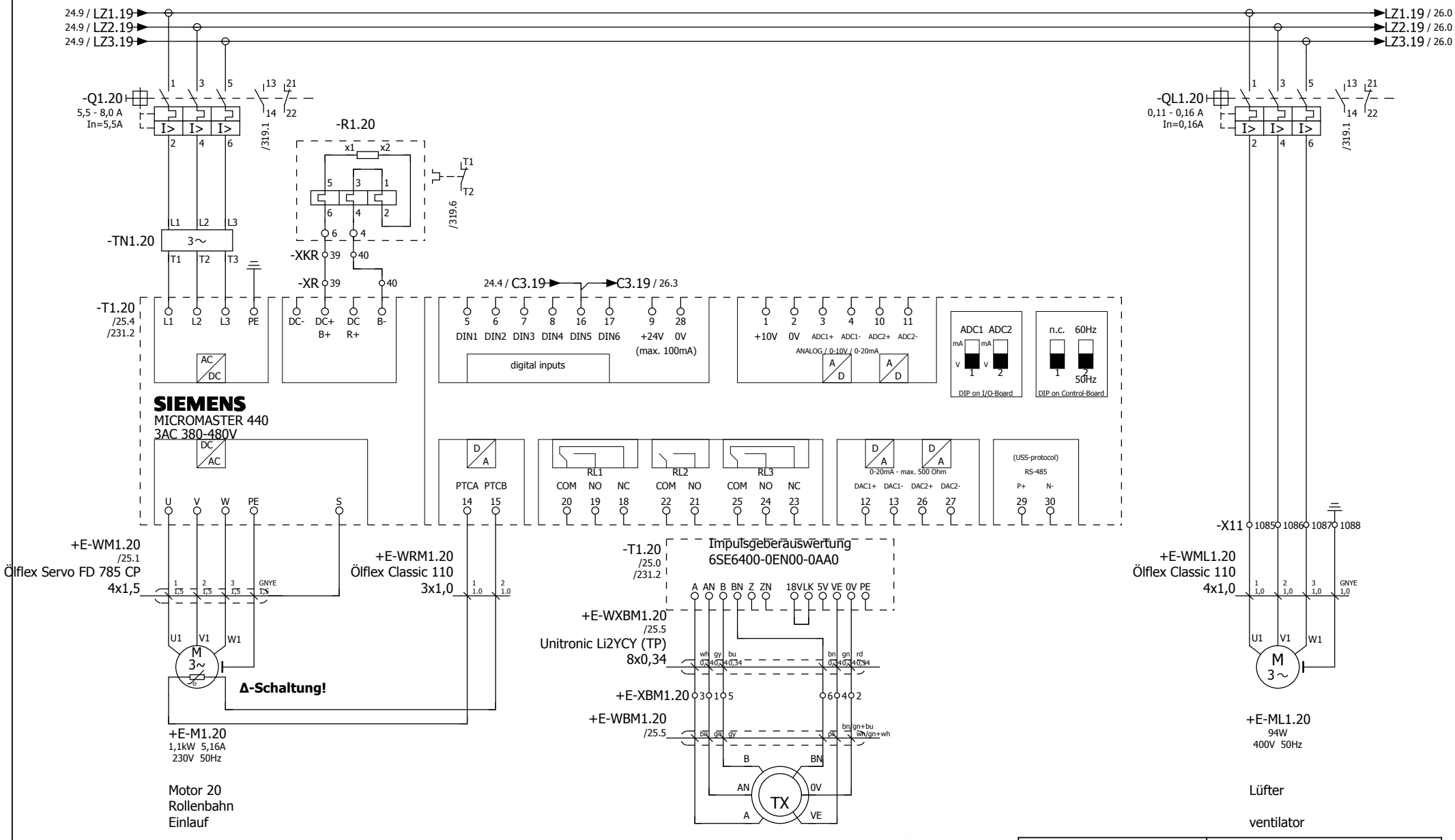

Management codes				Document identification				
5.3.0.0	CE	000	DW	QTPC	L04	ROSL	D	0049
System	Phase	Area	Typology	Project	Lot	Company	D/S	Number

Duferco Clabecq

24 26

Rev.	Date	Description	Prepared	Checked	Approved			
						Date	30.01.2012	
						Dus		

Duferco (SBM 2) Schaltschrank

in place of | Replaced by

RÖSLER finding a better way ...

load circuit
roll conveyor inlet M20

= ES
+ S

01-130070 00

Page 25
from 565

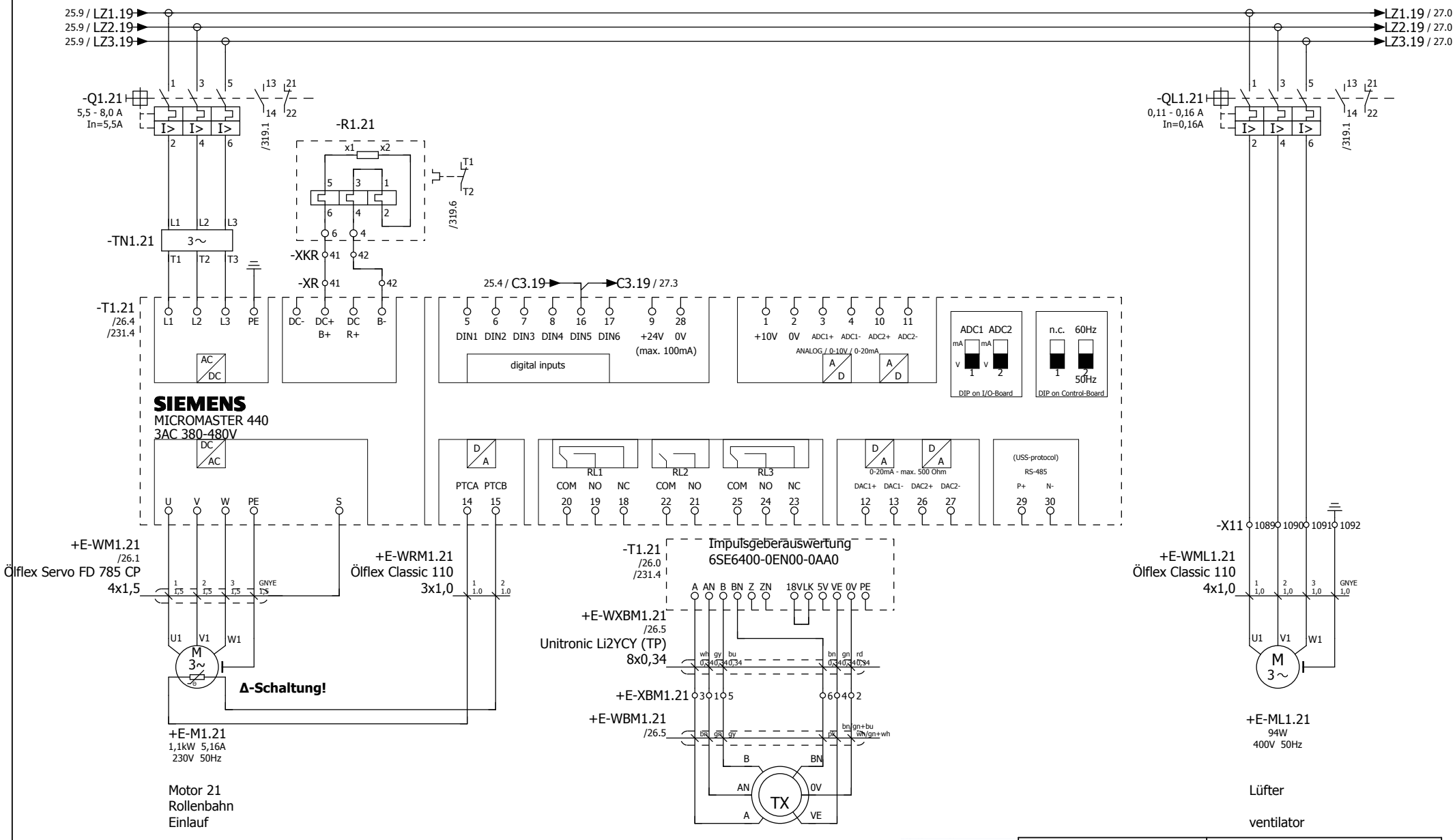

Management codes				Document identification				
5.3.0.0	CE	000	DW	QTPC	L04	ROSL	D	0049
System	Phase	Area	Typology	Project	Lot	Company	D/S	Number

Duferco Clabecq

25 27

						Date	30.01.2012	
						Dus		
Rev.	Date	Description	Prepared	Checked	Approved			

Duferco (SBM 2) Schaltschrank

in place of | Replaced by

RÖSLER finding a better way ...

load circuit
roll conveyor inlet M21

= ES
+ S

01-130070 00

Page 26
from 565

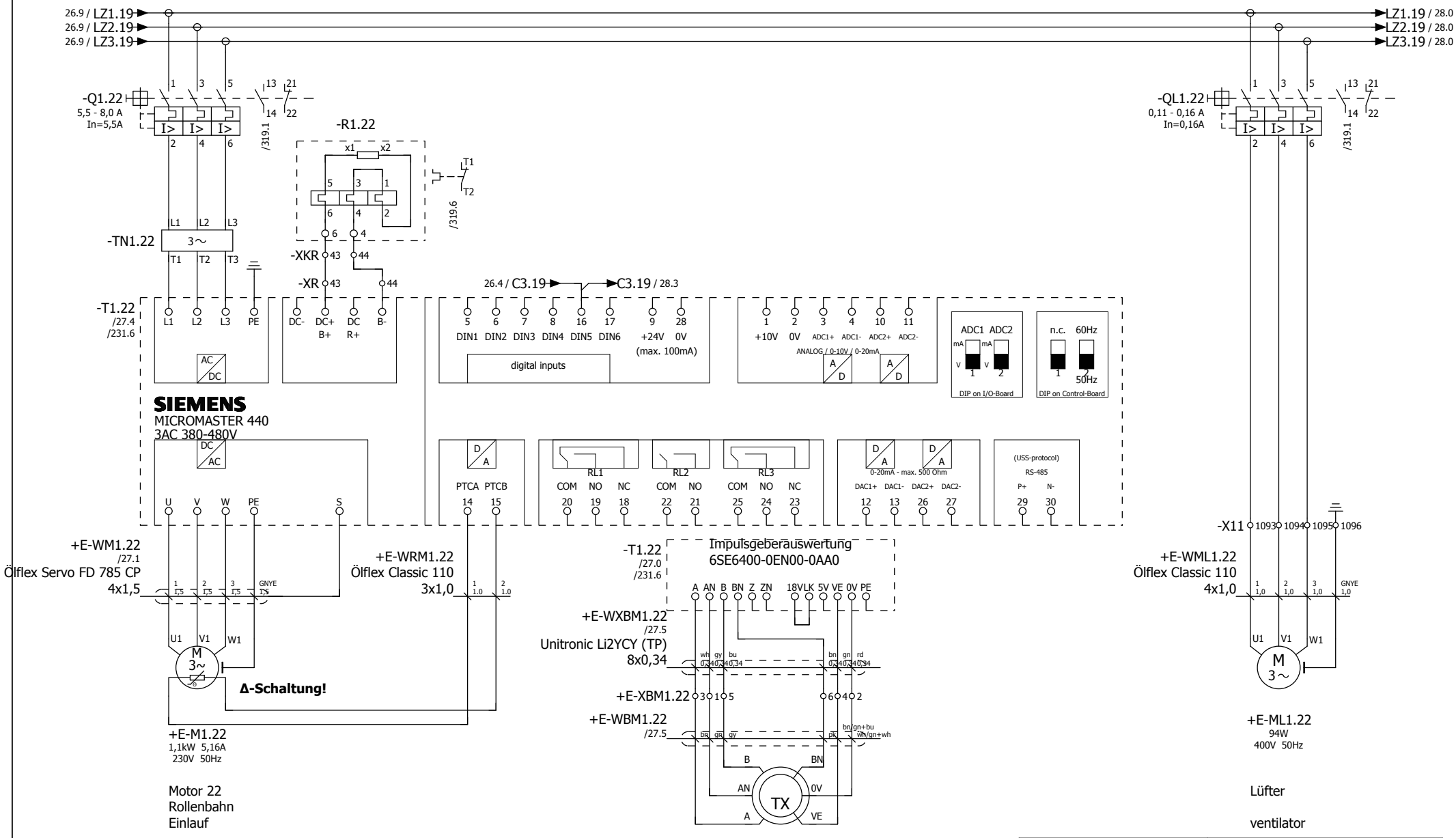

Management codes				Document identification				
5.3.0.0	CE	000	DW	QTPC	L04	ROSL	D	0049
System	Phase	Area	Typology	Project	Lot	Company	D/S	Number

26 28

Rev.	Date	Description	Prepared	Checked	Approved			
						Date	30.01.2012	
						Dus		

Duferco (SBM 2) Schaltschrank

in place of | Replaced by

RÖSLER finding a better way ...

load circuit
roll conveyor inlet M22

= ES
+ S

01-130070 00

Page 27
from 565

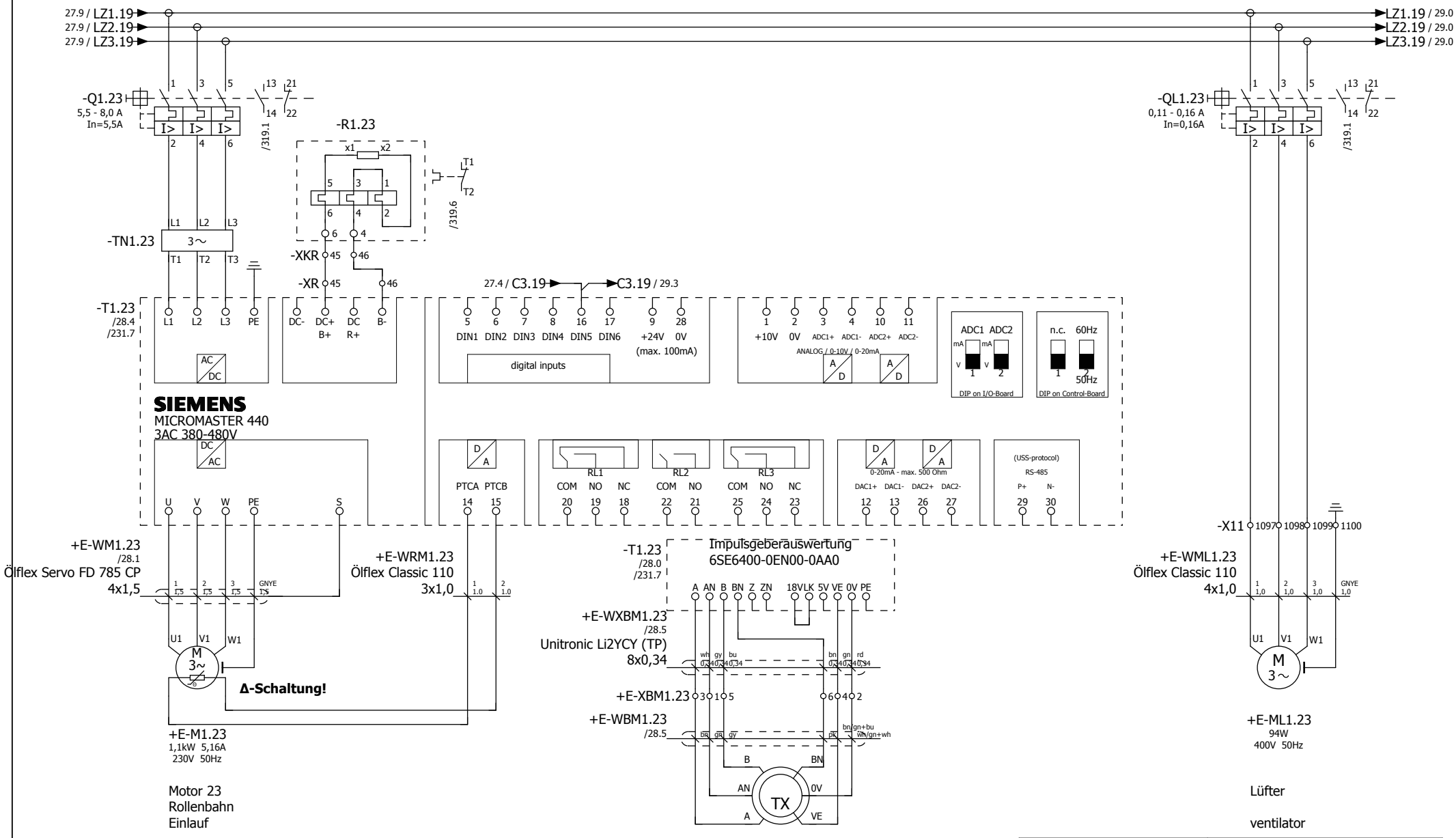

27

29

Management codes				Document identification				
5.3.0.0	CE	000	DW	QTPC	L04	ROSL	D	0049
System	Phase	Area	Typology	Project	Lot	Company	D/S	Number

						Date	30.01.2012	
						Dus		
Rev.	Date	Description	Prepared	Checked	Approved			

Duferco (SBM 2) Schaltschrank

in place of | Replaced by

RÖSLER finding a better way ...

load circuit
roll conveyor inlet M23

= ES
+ S

01-130070 00

Page 28
from 565

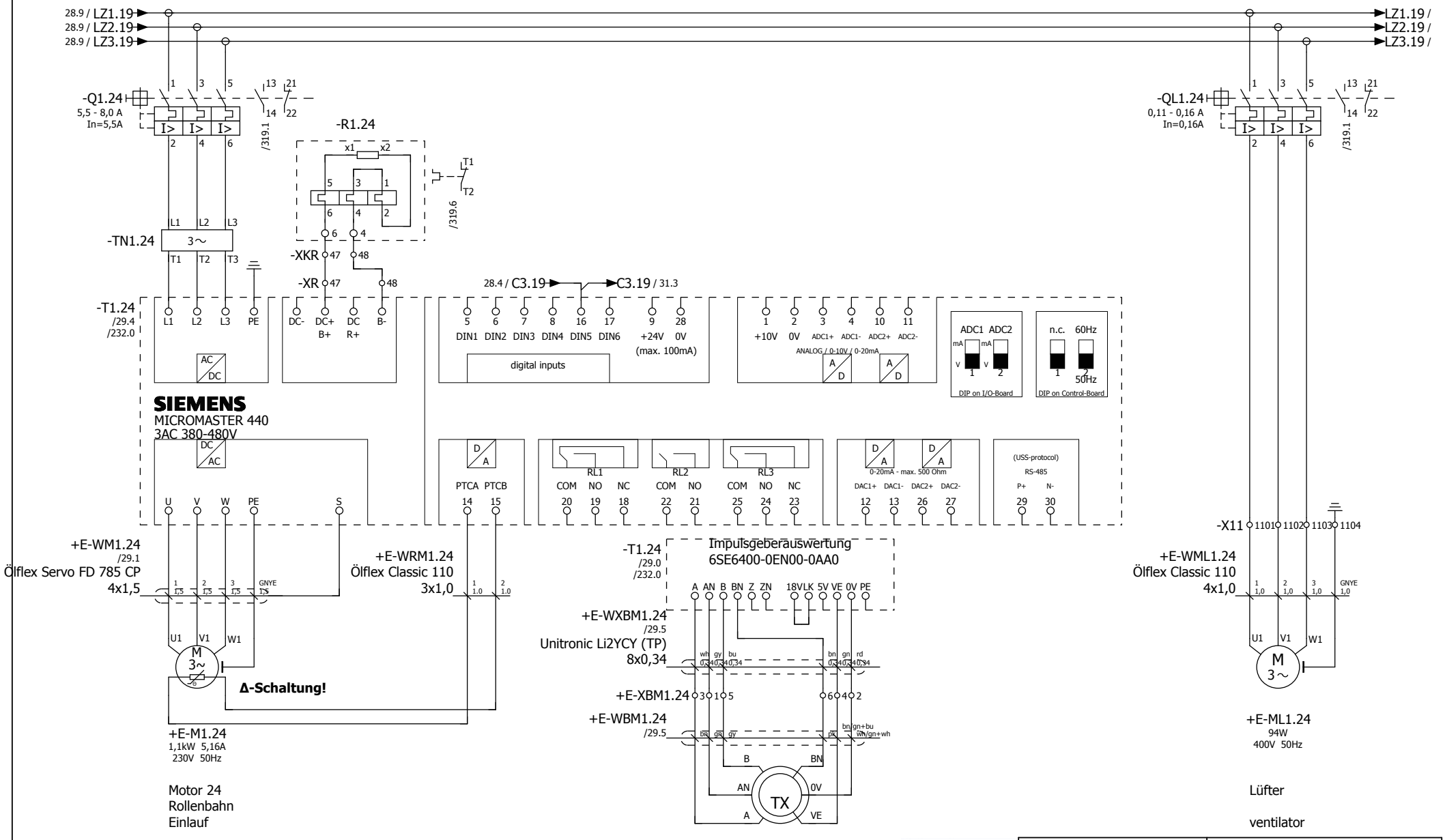

Duferco Clabecq

Management codes				Document identification				
5.3.0.0	CE	000	DW	QTPC	L04	ROSL	D	0049
System	Phase	Area	Typology	Project	Lot	Company	D/S	Number

28 30

						Date	30.01.2012	
						Dus		
Rev.	Date	Description	Prepared	Checked	Approved			

Duferco (SBM 2) Schaltschrank

in place of | Replaced by

RÖSLER finding a better way ...

load circuit
roll conveyor inlet M24

= ES
+ S

01-130070 00

Page 29
from 565

Zuleitung
Frequenzumrichter
Einlauf M25 - M30

input lead
frequency converter
inlet M25 - M30

Duferco Clabecq

Management codes				Document identification				
5.3.0.0	CE	000	DW	QTPC	L04	ROSL	D	0049
System	Phase	Area	Typology	Project	Lot	Company	D/S	Number

29 31

Rev.	Date	Description	Prepared	Checked	Approved			
						Date	30.01.2012	
						Dus		

Duferco (SBM 2) Schaltschrank
in place of | Replaced by

RÖSLER finding a better way ...

load circuit
input lead FU M25 - M30

= ES
+ S

01-130070 00

Page 30
from 565

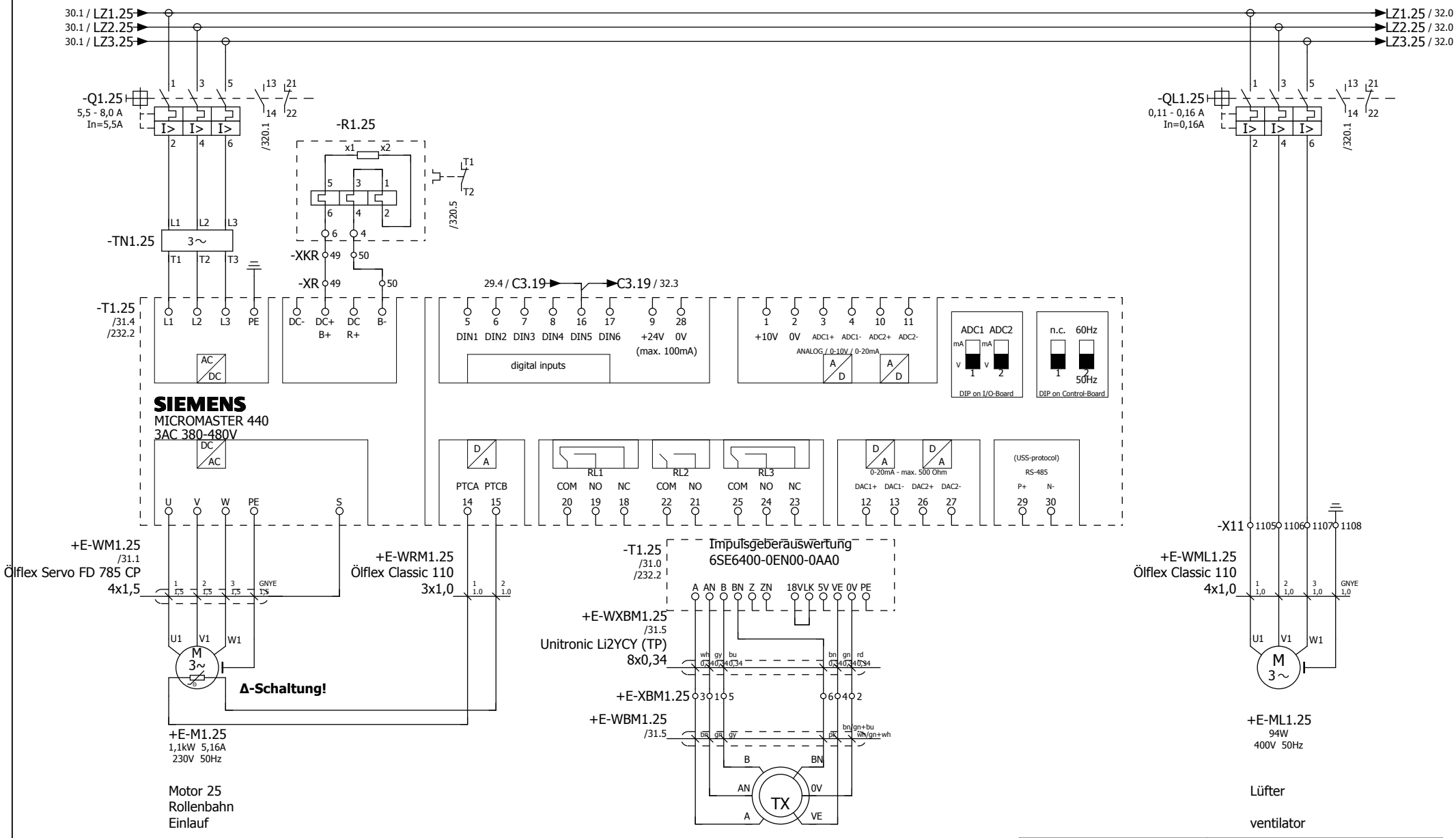

30

32

Duferco Clabecq

Management codes				Document identification				
5.3.0.0	CE	000	DW	QTPC	L04	ROSL	D	0049
System	Phase	Area	Typology	Project	Lot	Company	D/S	Number

						Date	30.01.2012	
						Dus		
Rev.	Date	Description	Prepared	Checked	Approved			

Duferco (SBM 2) Schaltschrank

in place of | Replaced by

RÖSLER finding a better way ...

load circuit
roll conveyor inlet M25

= ES
+ S

01-130070 00

Page 31
from 565

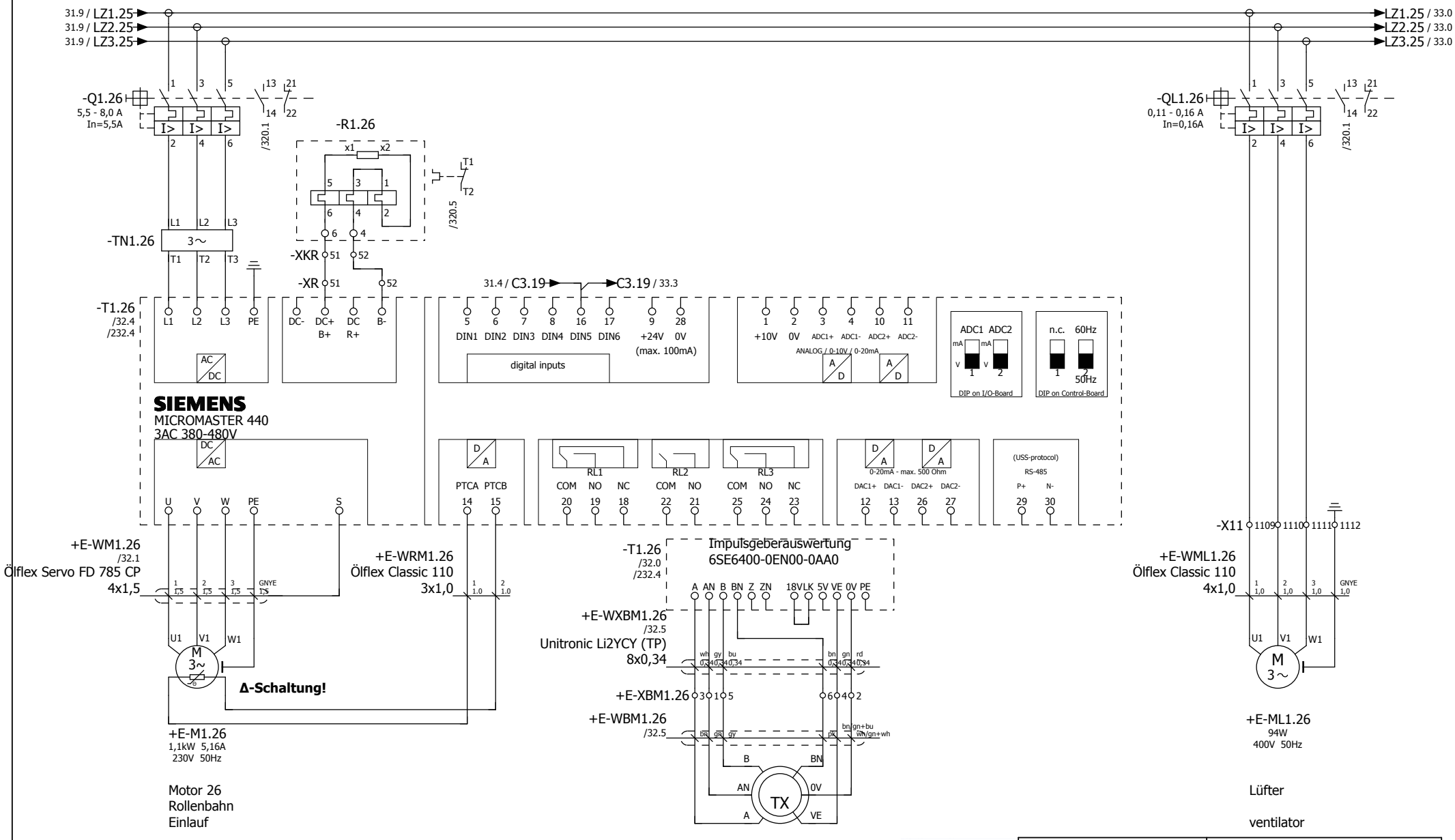

Management codes				Document identification				
5.3.0.0	CE	000	DW	QTPC	L04	ROSL	D	0049
System	Phase	Area	Typology	Project	Lot	Company	D/S	Number

Duferco Clabecq

31 33

Rev.	Date	Description	Prepared	Checked	Approved	Date 30.01.2012	Duferco (SBM 2) Schaltschrank	RÖSLER finding a better way ...	load circuit roll conveyor inlet M26	= ES	01-130070 00	Page 32
						Dus				+ S		from 565
							in place of	Replaced by				

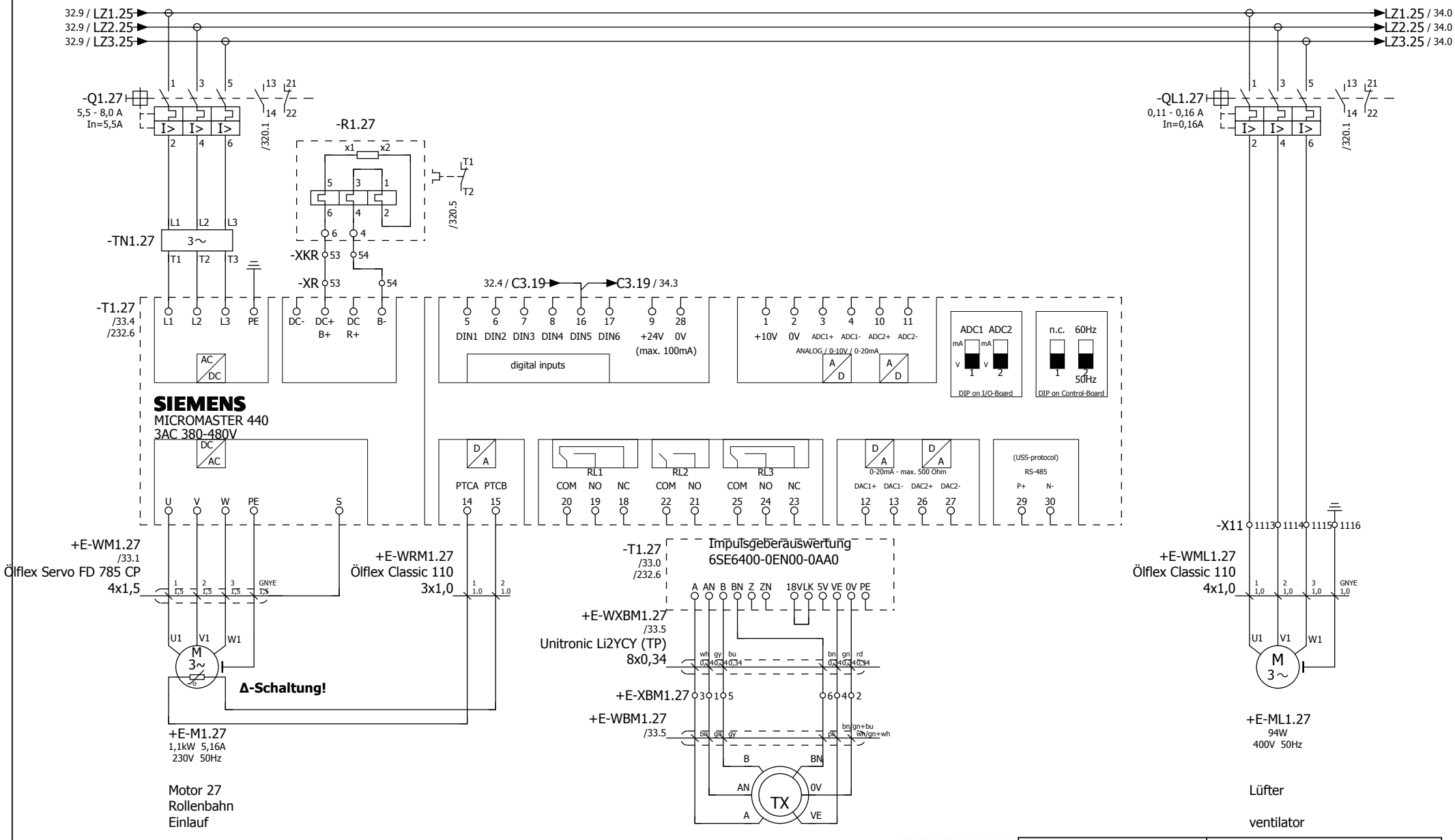

32

34

Duferco Clabecq

Management codes				Document identification				
5.3.0.0	CE	000	DW	QTPC	L04	ROSL	D	0049
System	Phase	Area	Typology	Project	Lot	Company	D/S	Number

						Date	30.01.2012	
						Dus		
Rev.	Date	Description	Prepared	Checked	Approved			

Duferco (SBM 2) Schaltschrank

in place of | Replaced by

RÖSLER finding a better way ...

load circuit
roll conveyor inlet M27

= ES
+ S

01-130070 00

Page 33
from 565

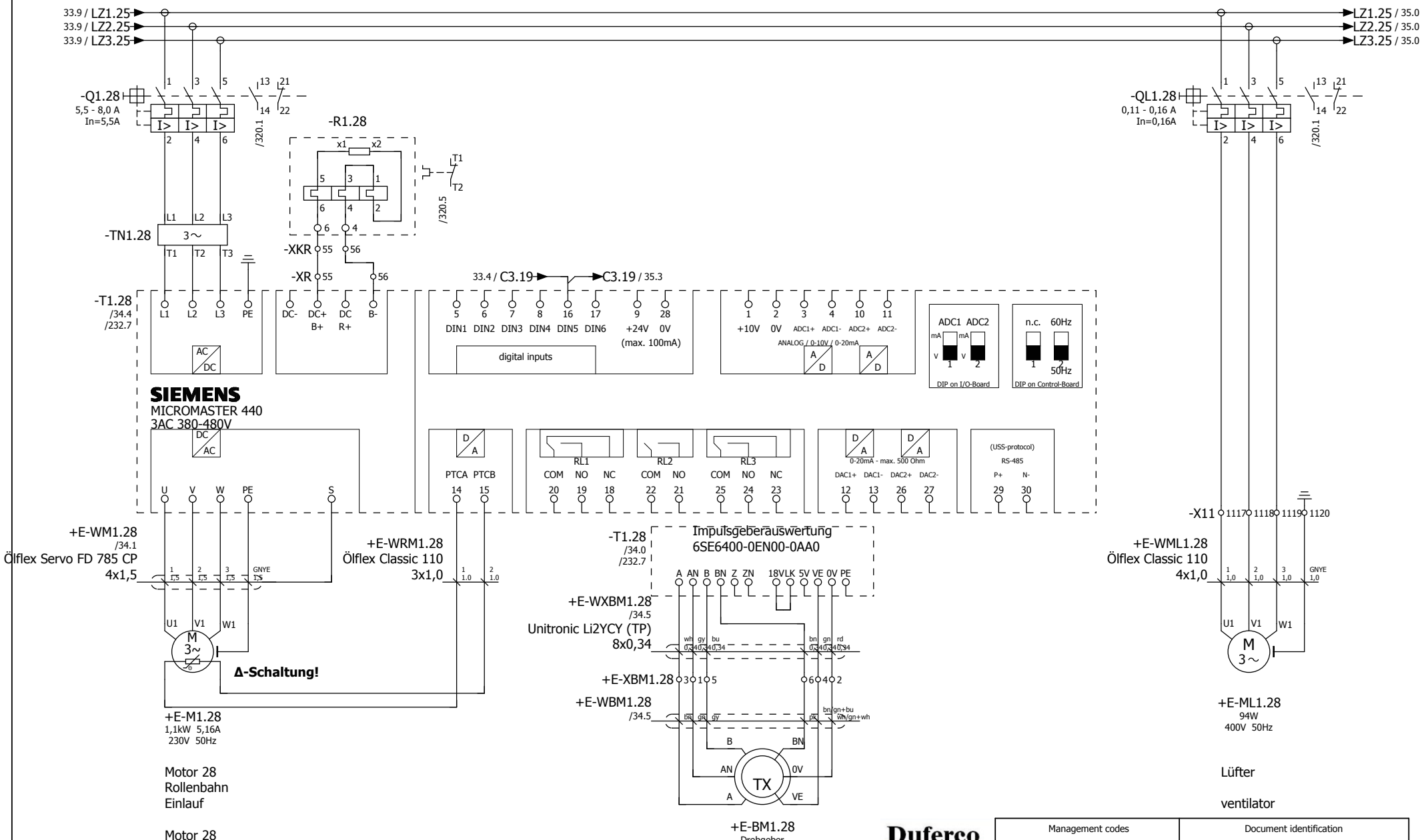

33

35

Duferco Clabecq

Management codes				Document identification				
5.3.0.0	CE	000	DW	QTPC	L04	ROSL	D	0049
System	Phase	Area	Typology	Project	Lot	Company	D/S	Number

						Date	30.01.2012	
						Dus		
Rev.	Date	Description	Prepared	Checked	Approved			

Duferco (SBM 2) Schaltschrank

in place of | Replaced by

RÖSLER finding a better way ...

load circuit
roll conveyor inlet M28

= ES
+ S

01-130070 00

Page 34
from 565

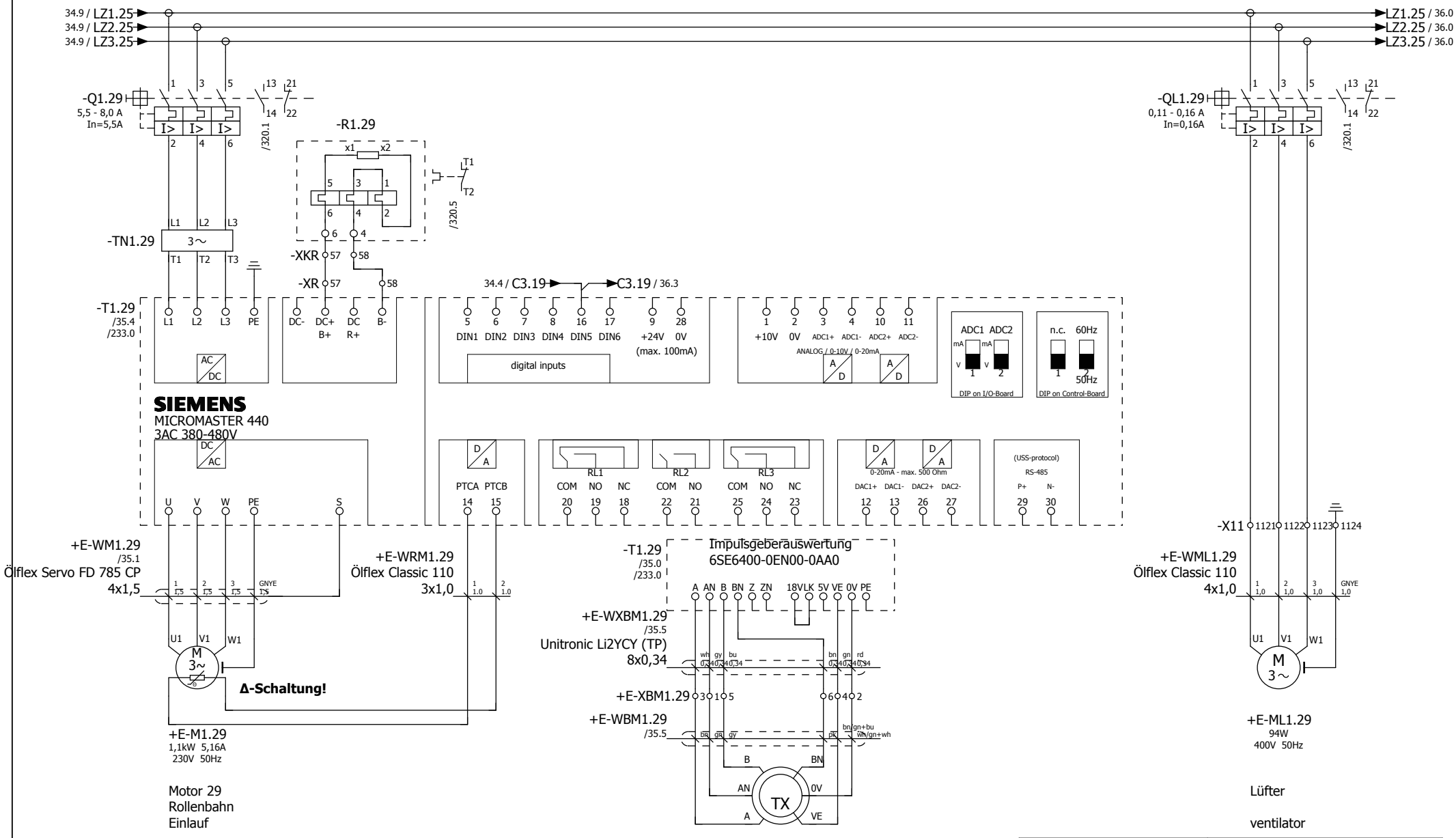

34

36

Management codes				Document identification				
5.3.0.0	CE	000	DW	QTPC	L04	ROSL	D	0049
System	Phase	Area	Typology	Project	Lot	Company	D/S	Number

Duferco Clabecq

						Date	30.01.2012	
						Dus		
Rev.	Date	Description	Prepared	Checked	Approved			

Duferco (SBM 2) Schaltschrank

in place of | Replaced by

RÖSLER finding a better way ...

load circuit
roll conveyor inlet M29

= ES
+ S

01-130070 00

Page 35
from 565

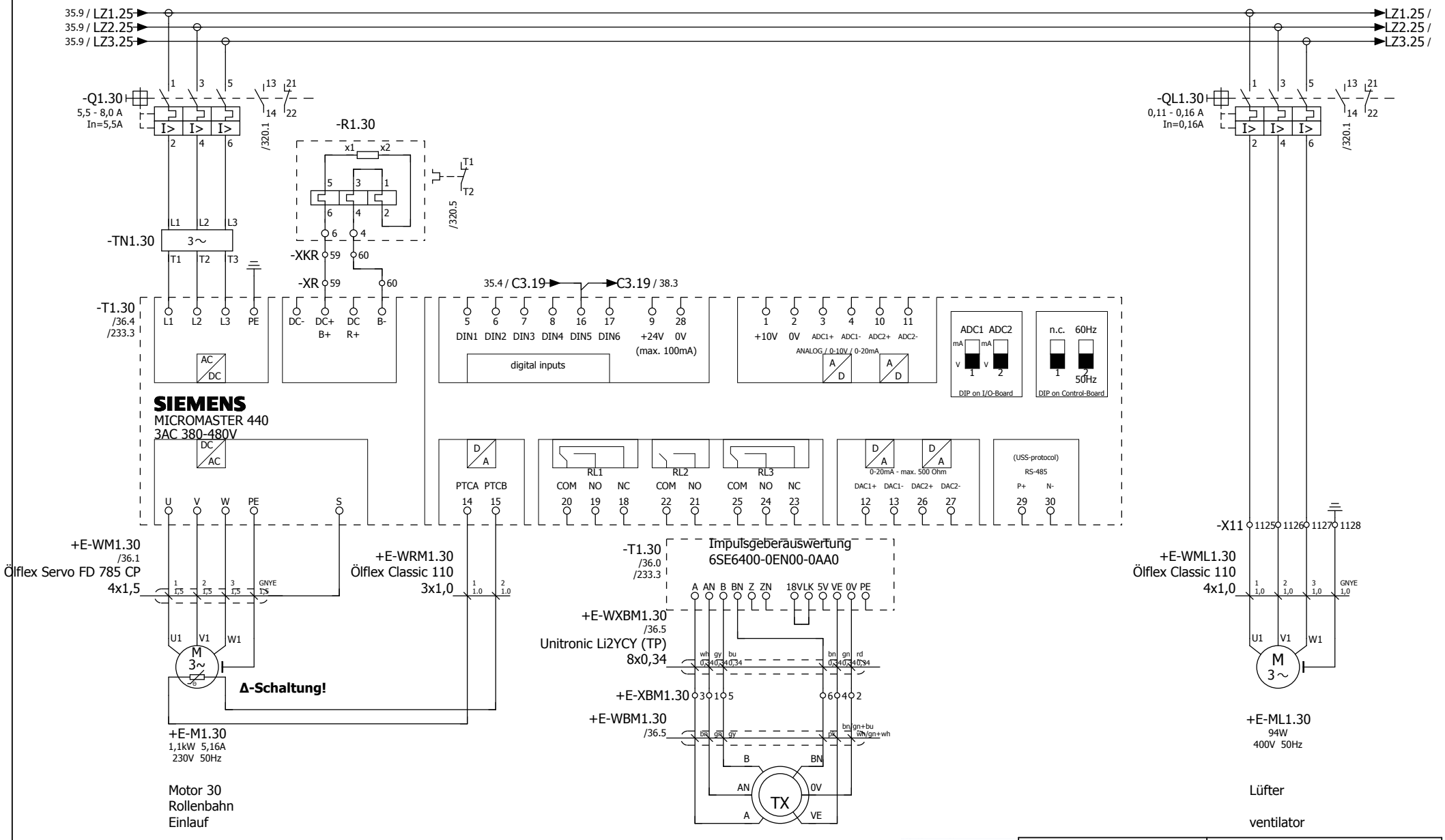

35

37

Duferco Clabecq

Management codes				Document identification				
5.3.0.0	CE	000	DW	QTPC	L04	ROSL	D	0049
System	Phase	Area	Typology	Project	Lot	Company	D/S	Number

						Date	30.01.2012	
						Dus		
Rev.	Date	Description	Prepared	Checked	Approved			

Duferco (SBM 2) Schaltschrank

in place of | Replaced by

RÖSLER finding a better way ...

load circuit
roll conveyor inlet M30

= ES
+ S

01-130070 00

Page 36
from 565

Zuleitung
Frequenzumrichter
Einlauf M31 - M36

input lead
frequency converter
inlet M31 - M36

36

Duferco Clabecq

Management codes				Document identification				
5.3.0.0	CE	000	DW	QTPC	L04	ROSL	D	0049
System	Phase	Area	Typology	Project	Lot	Company	D/S	Number

38

Rev.	Date	Description	Prepared	Checked	Approved			
						Date	30.01.2012	
						Dus		

Duferco (SBM 2) Schaltschrank

in place of | Replaced by

RÖSLER finding a better way ...

load circuit
input lead FU M31 - M36

= ES
+ S

01-130070 00

Page 37
from 565

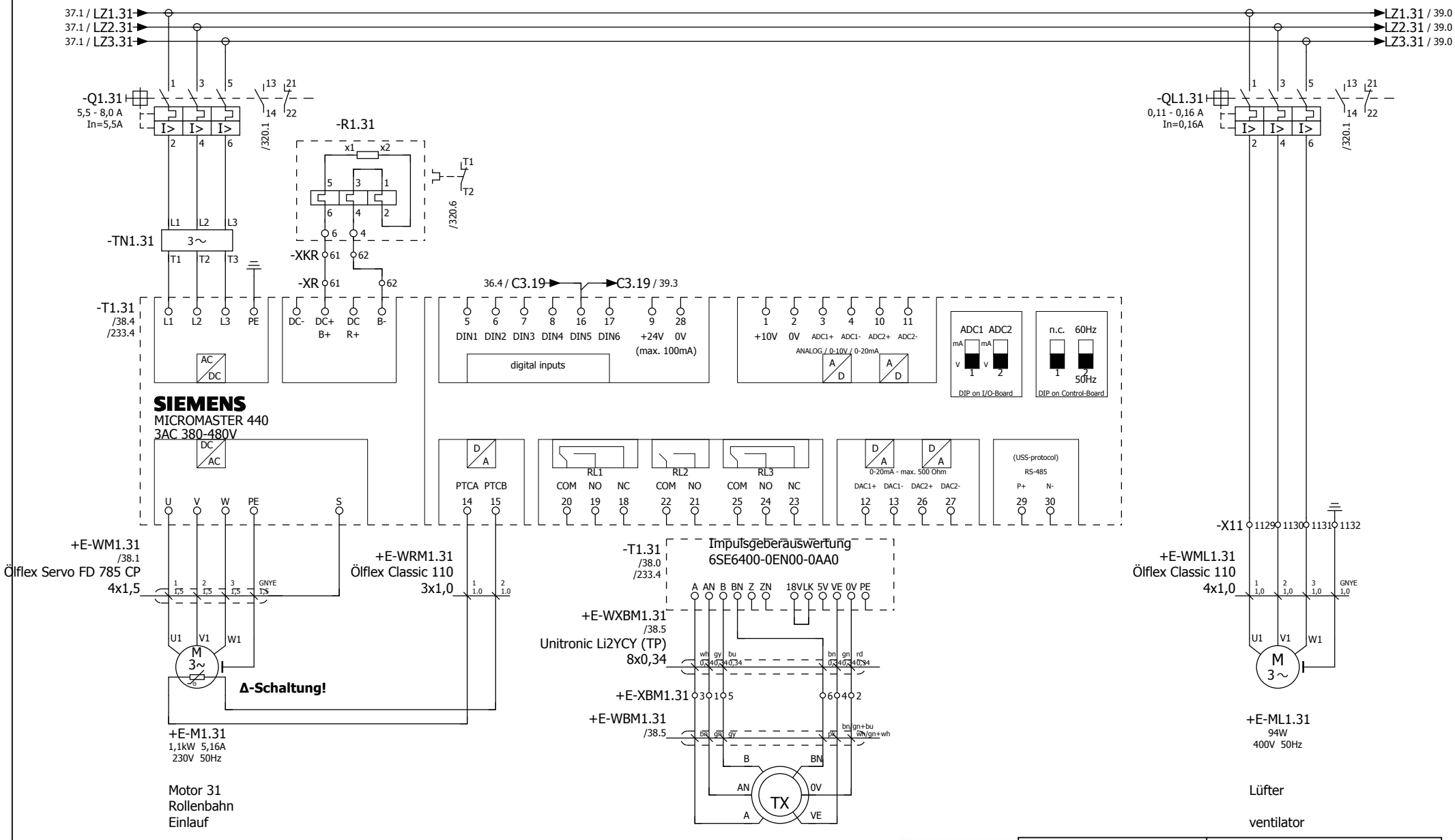

37

39

Management codes				Document identification				
5.3.0.0	CE	000	DW	QTPC	L04	ROSL	D	0049
System	Phase	Area	Typology	Project	Lot	Company	D/S	Number

						Date	30.01.2012	
						Dus		
Rev.	Date	Description	Prepared	Checked	Approved			

Duferco (SBM 2) Schaltschrank

in place of | Replaced by

RÖSLER finding a better way ...

load circuit
roll conveyor inlet M31

= ES
+ S

01-130070 00

Page 38
from 565

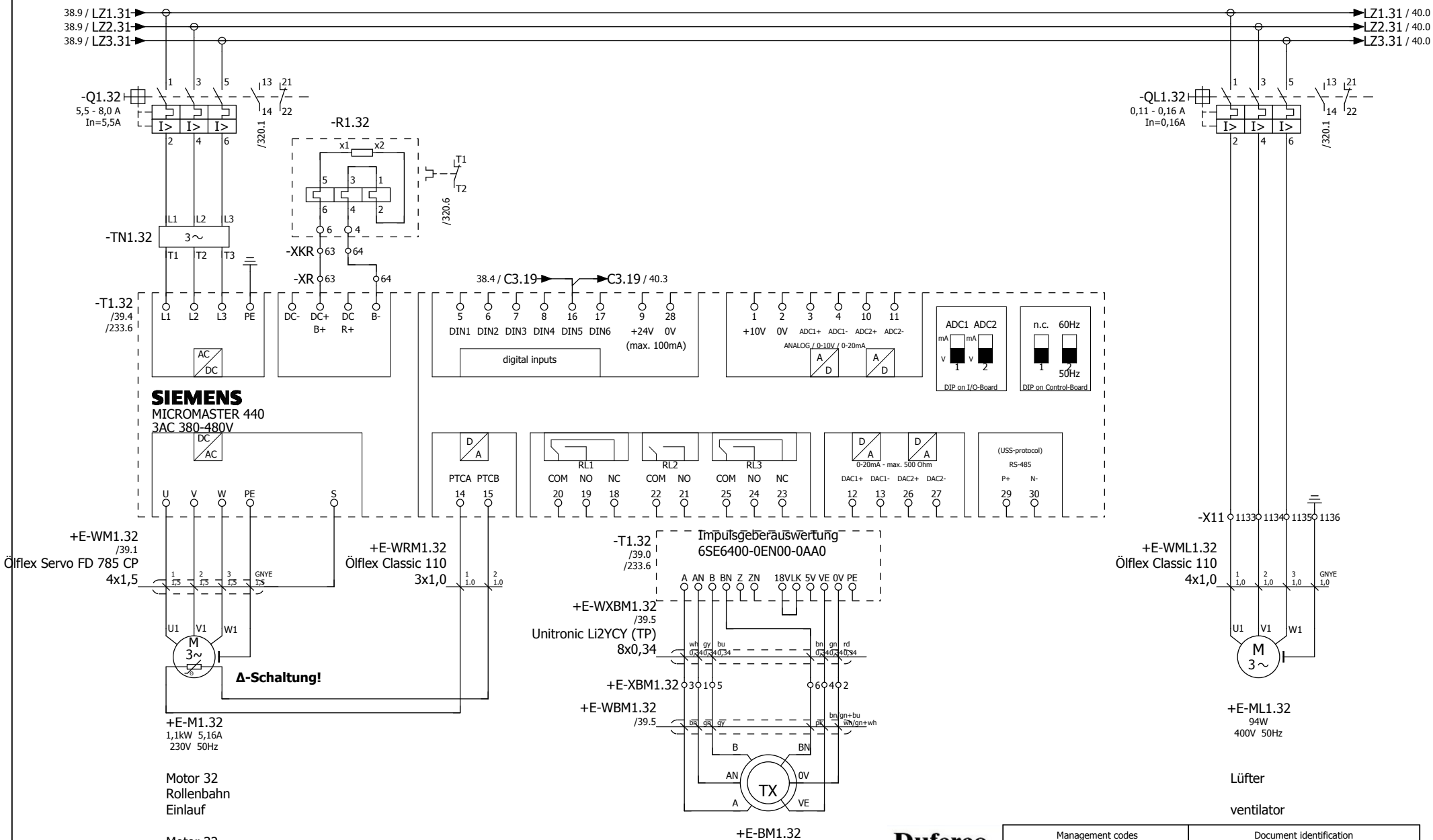

38

40

Management codes				Document identification				
5.3.0.0	CE	000	DW	QTPC	L04	ROSL	D	0049
System	Phase	Area	Typology	Project	Lot	Company	D/S	Number

Duferco Clabecq

						Date	30.01.2012	
						Dus		
Rev.	Date	Description	Prepared	Checked	Approved			

Duferco (SBM 2) Schaltschrank

in place of | Replaced by

RÖSLER finding a better way ...

load circuit
roll conveyor inlet M32

= ES
+ S

01-130070 00

Page 39
from 565

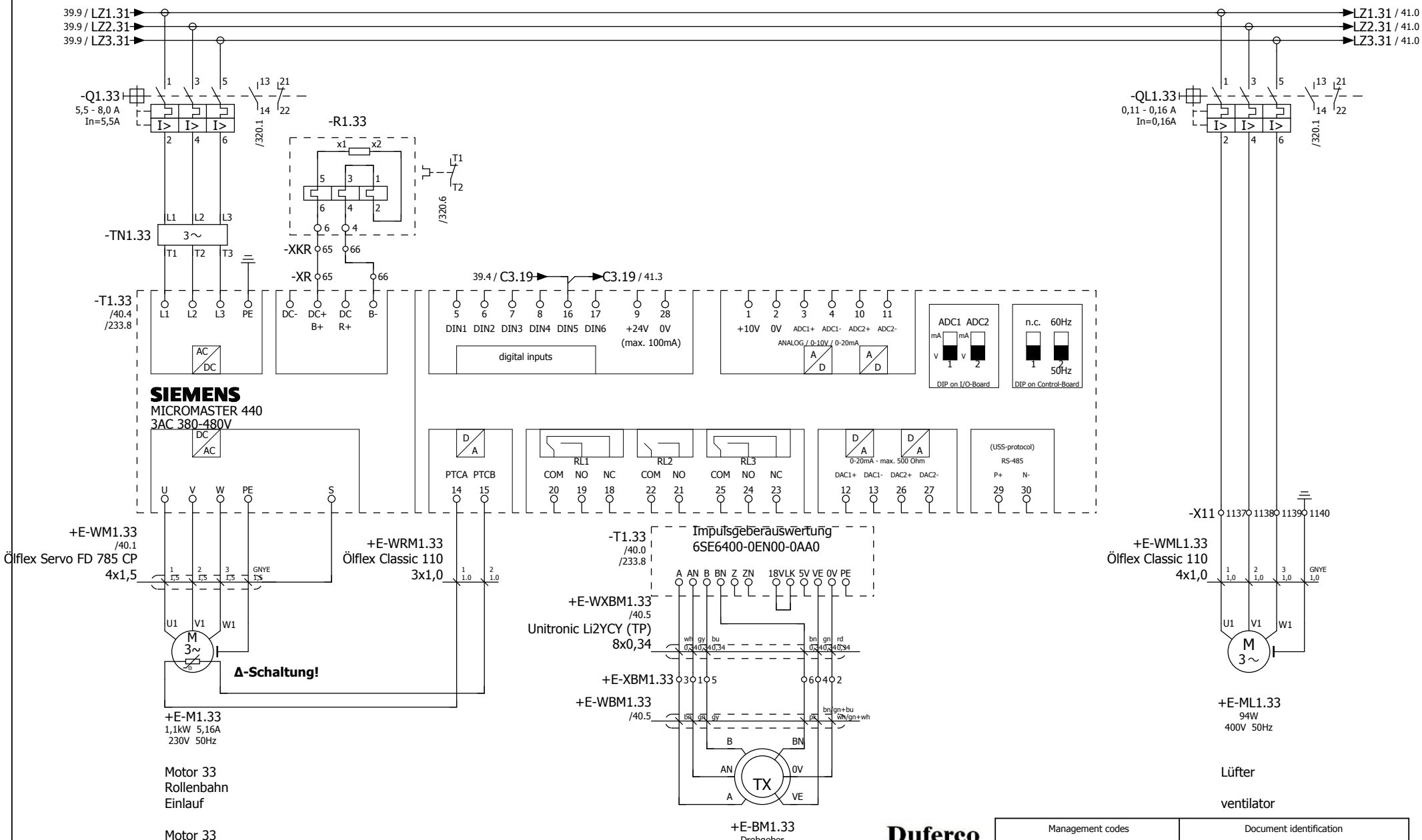

Management codes				Document identification				
5.3.0.0	CE	000	DW	QTPC	L04	ROSL	D	0049
System	Phase	Area	Typology	Project	Lot	Company	D/S	Number

Duferco Clabecq

39

41

						Date	30.01.2012	
						Dus		
Rev.	Date	Description	Prepared	Checked	Approved			

Duferco (SBM 2) Schaltschrank

in place of | Replaced by

RÖSLER finding a better way ...

load circuit
roll conveyor inlet M33

= ES
+ S

01-130070 00

Page 40
from 565

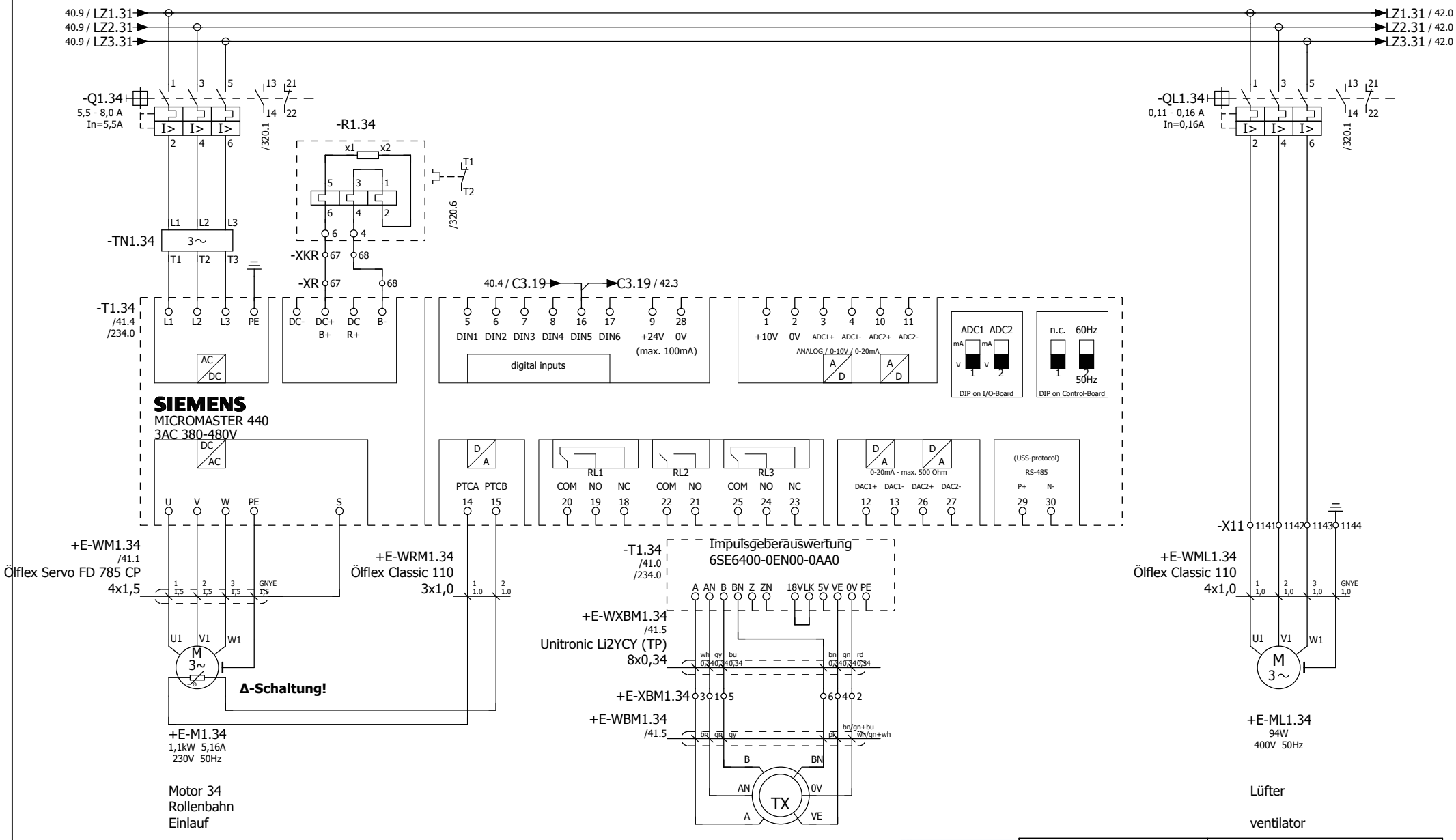

Duferco Clabecq

Management codes				Document identification				
5.3.0.0	CE	000	DW	QTPC	L04	ROSL	D	0049
System	Phase	Area	Typology	Project	Lot	Company	D/S	Number

40 42

						Date	30.01.2012	
						Dus		
Rev.	Date	Description	Prepared	Checked	Approved			

Duferco (SBM 2) Schaltschrank

in place of | Replaced by

RÖSLER finding a better way ...

load circuit
roll conveyor inlet M34

= ES
+ S

01-130070 00

Page 41
from 565

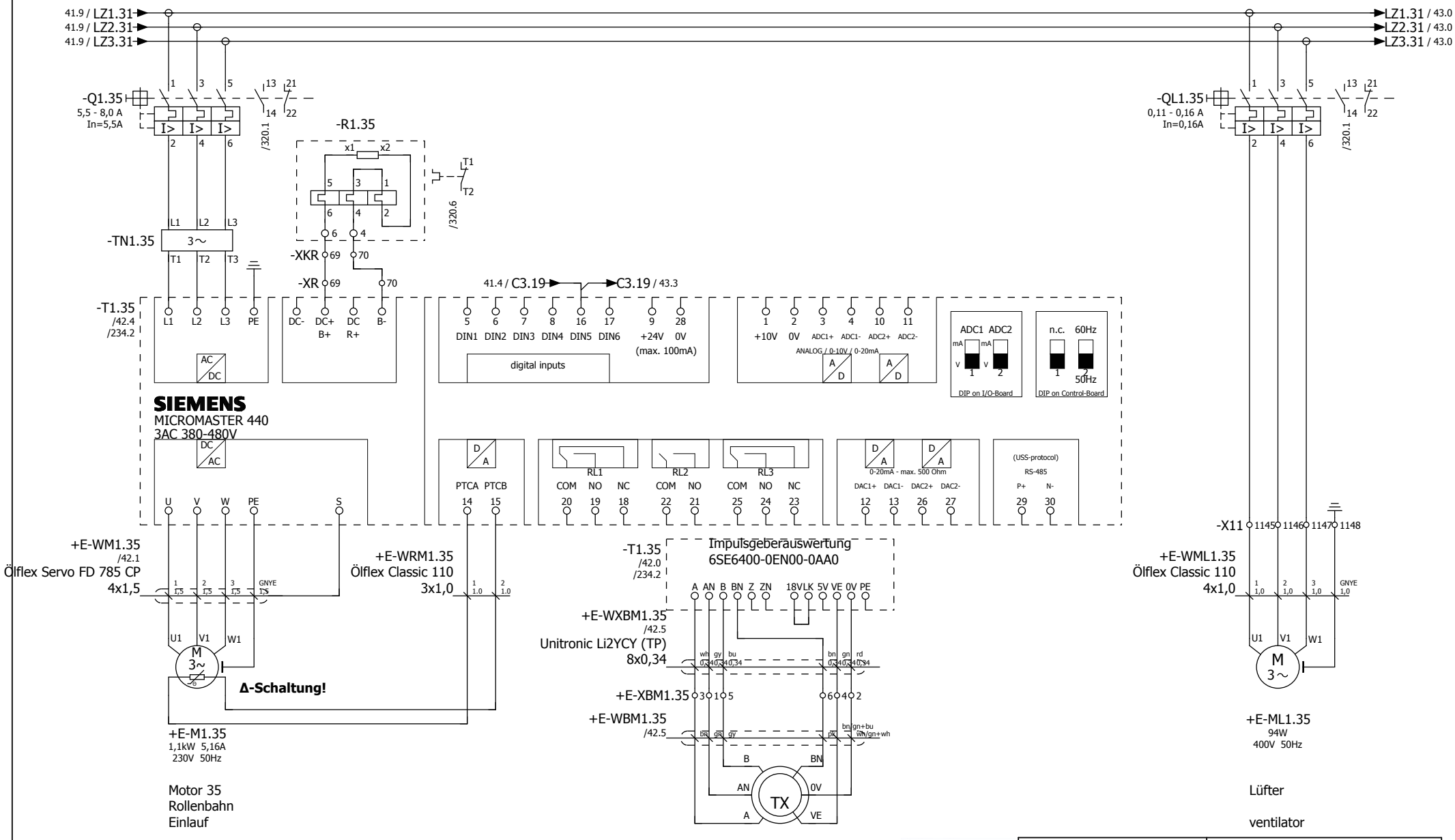

Duferco Clabecq

Management codes				Document identification				
5.3.0.0	CE	000	DW	QTPC	L04	ROSL	D	0049
System	Phase	Area	Typology	Project	Lot	Company	D/S	Number

41 43

						Date	30.01.2012	
						Dus		
Rev.	Date	Description	Prepared	Checked	Approved			

Duferco (SBM 2) Schaltschrank

in place of | Replaced by

RÖSLER finding a better way ...

load circuit
roll conveyor inlet M35

= ES
+ S

01-130070 00

Page 42
from 565

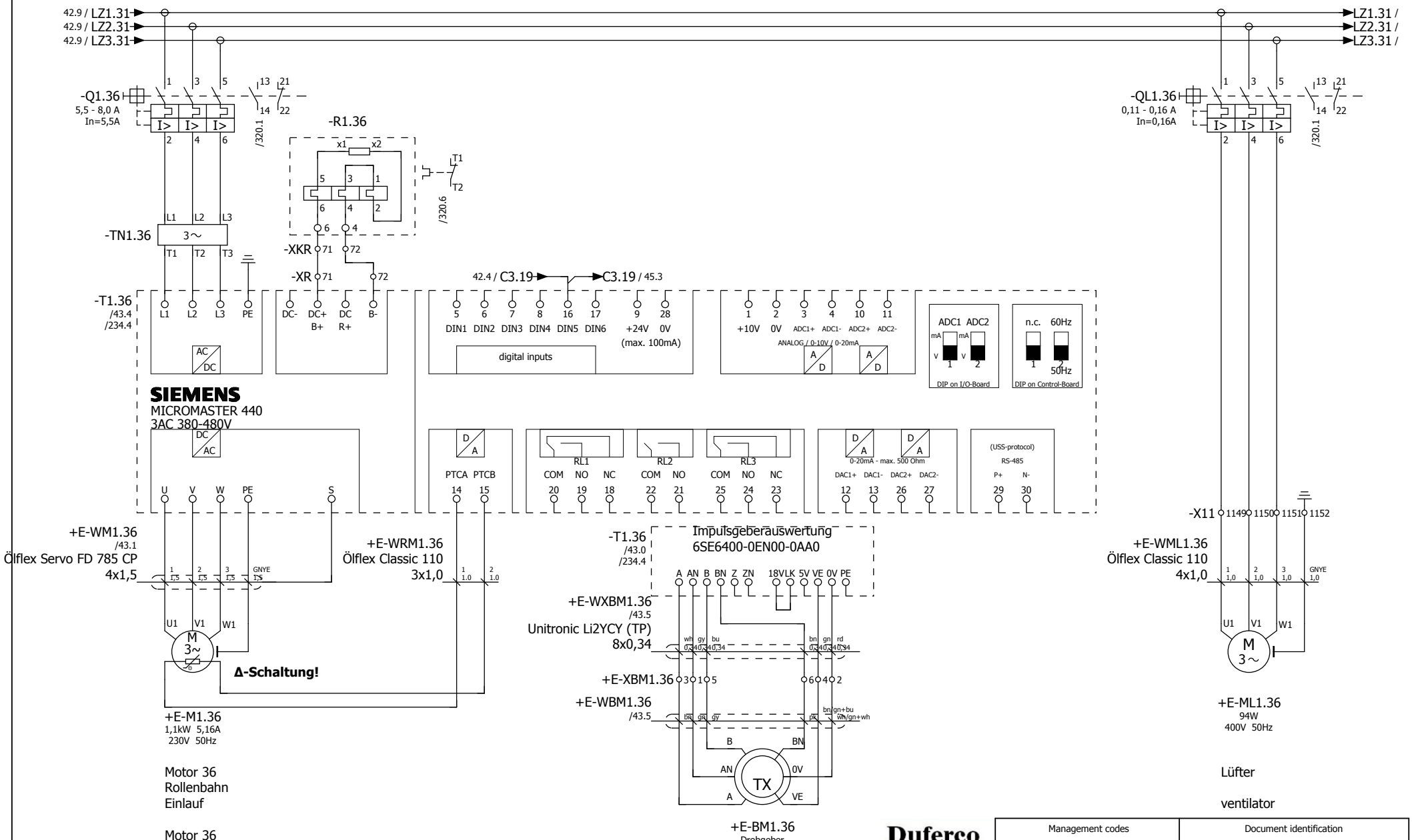

Management codes				Document identification				
5.3.0.0	CE	000	DW	QTPC	L04	ROSL	D	0049
System	Phase	Area	Typology	Project	Lot	Company	D/S	Number

Duferco Clabecq

42 44

Rev.	Date	Description	Prepared	Checked	Approved			
						Date	30.01.2012	
						Dus		

Duferco (SBM 2) Schaltschrank

in place of | Replaced by

RÖSLER finding a better way ...

load circuit
roll conveyor inlet M36

= ES
+ S

01-130070 00

Page 43
from 565

Zuleitung
Frequenzumrichter
Einlauf M37 - M42

input lead
frequency converter
inlet M37 - M42

Lüfter
Schaltschrank
ventilator
Enclosure

Duferco Clabecq

Management codes				Document identification				
5.3.0.0	CE	000	DW	QTPC	L04	ROSL	D	0049
System	Phase	Area	Typology	Project	Lot	Company	D/S	Number

43 45

Rev.	Date	Description	Prepared	Checked	Approved			
						Date	30.01.2012	
						Dus		

Duferco (SBM 2) Schaltschrank
in place of | Replaced by

RÖSLER finding a better way ...

load circuit
input lead FU M37 - M42

= ES
+ S

01-130070 00

Page 44
from 565

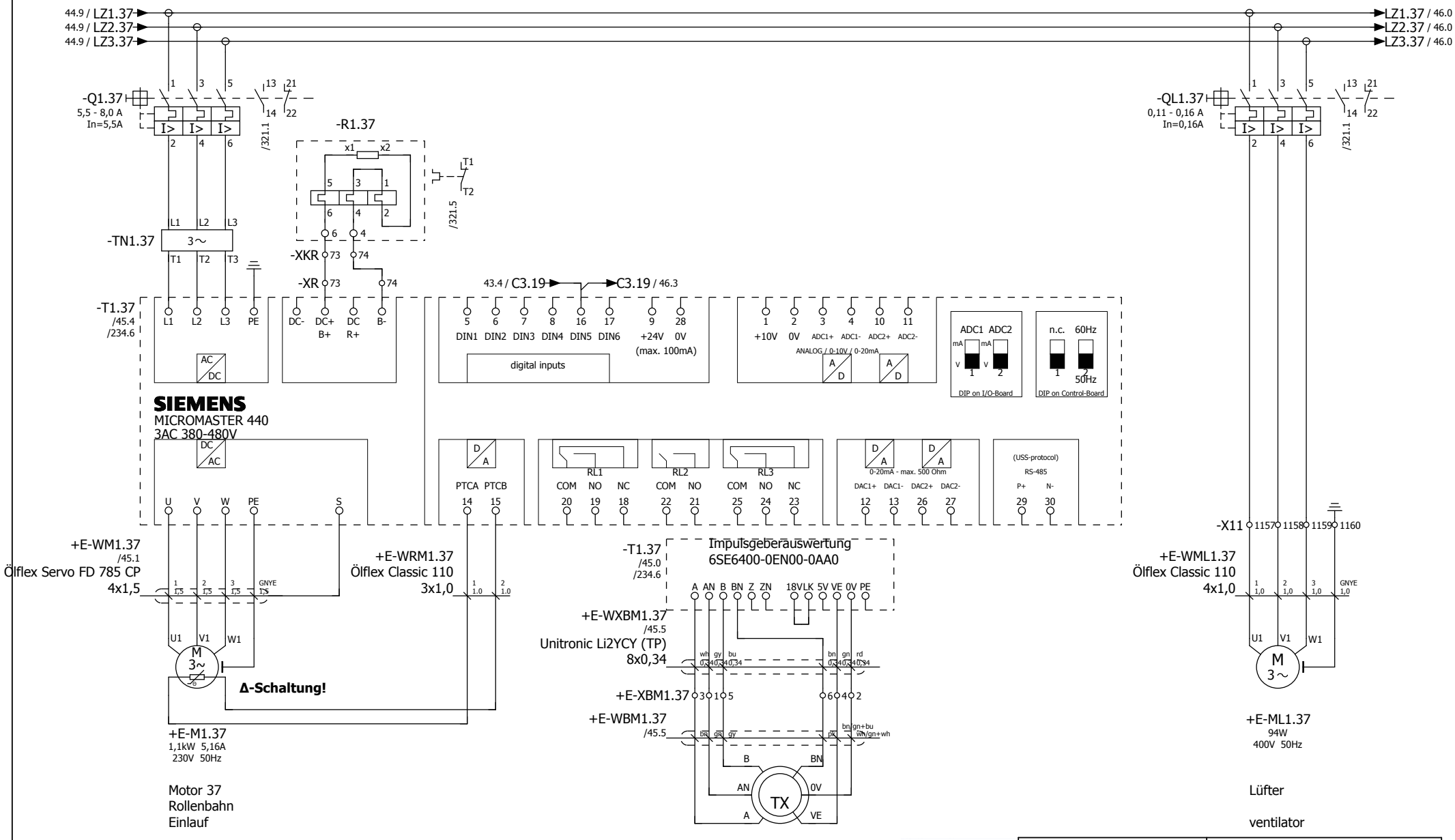

44

46

Management codes				Document identification				
5.3.0.0	CE	000	DW	QTPC	L04	ROSL	D	0049
System	Phase	Area	Typology	Project	Lot	Company	D/S	Number

Duferco Clabecq

						Date	30.01.2012	
						Dus		
Rev.	Date	Description	Prepared	Checked	Approved			

Duferco (SBM 2) Schaltschrank

in place of | Replaced by

RÖSLER finding a better way ...

load circuit
roll conveyor inlet M37

= ES
+ S

01-130070 00

Page 45
from 565

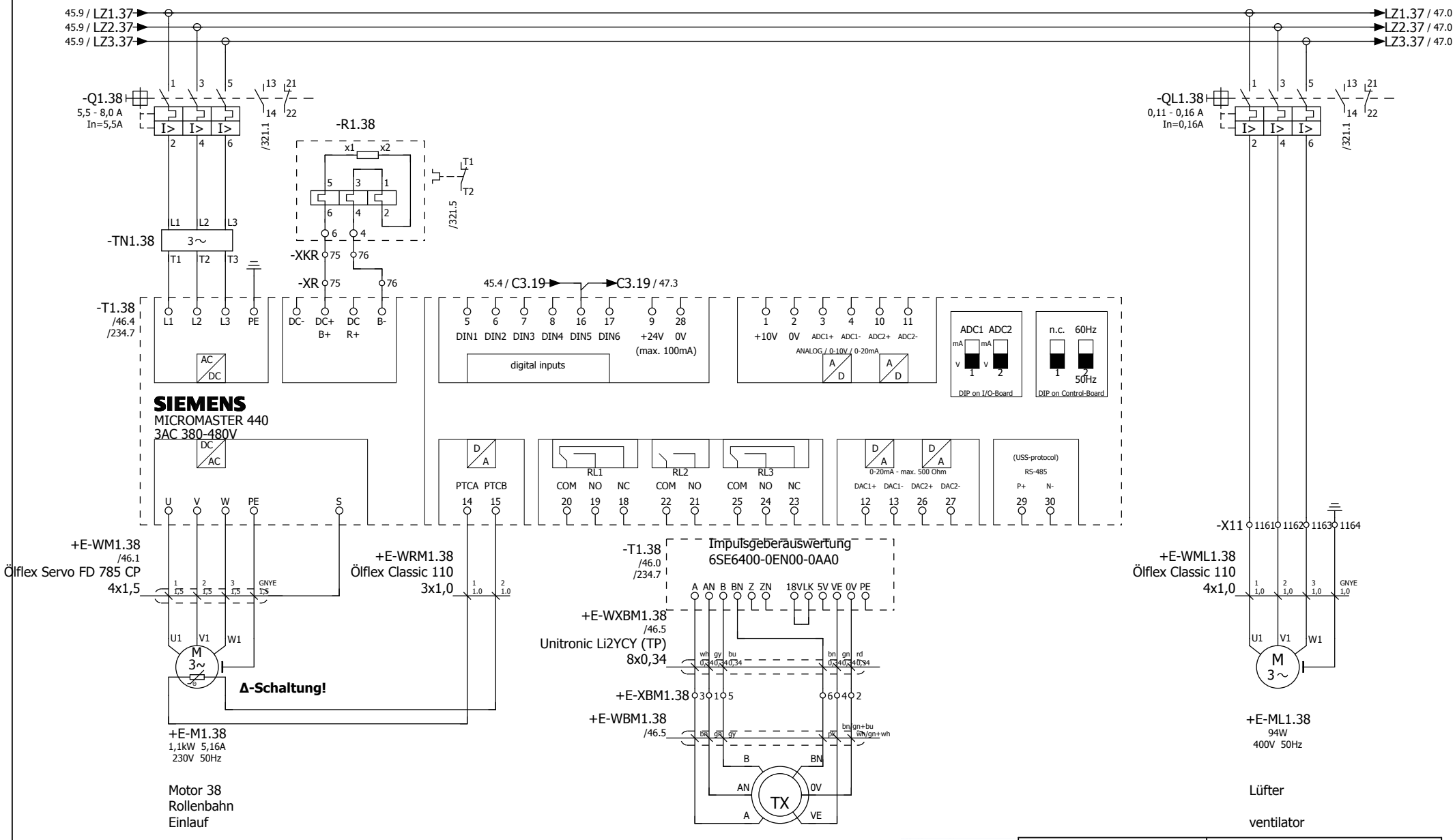

Management codes				Document identification				
5.3.0.0	CE	000	DW	QTPC	L04	ROSL	D	0049
System	Phase	Area	Typology	Project	Lot	Company	D/S	Number

Duferco Clabecq

45 47

Rev.	Date	Description	Prepared	Checked	Approved			
						Date	30.01.2012	
						Dus		

Duferco (SBM 2) Schaltschrank

in place of | Replaced by

RÖSLER finding a better way ...

load circuit
roll conveyor inlet M38

= ES
+ S

01-130070 00

Page 46
from 565

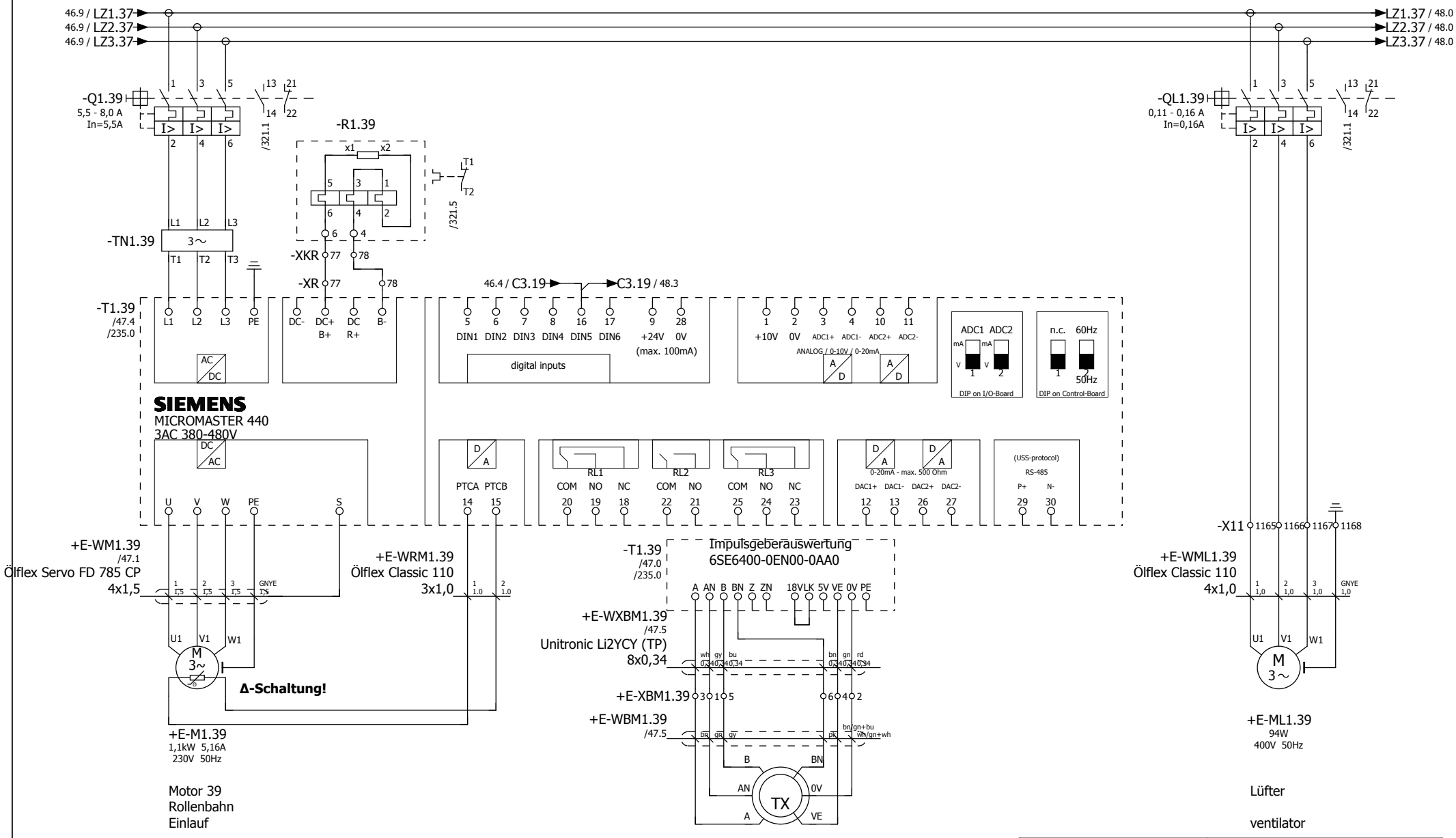

46

48

Management codes				Document identification				
5.3.0.0	CE	000	DW	QTPC	L04	ROSL	D	0049
System	Phase	Area	Typology	Project	Lot	Company	D/S	Number

Duferco Clabecq

Rev.	Date	Description	Prepared	Checked	Approved			
						Date	30.01.2012	
						Dus		

Duferco (SBM 2) Schaltschrank

in place of | Replaced by

RÖSLER finding a better way ...

load circuit
roll conveyor inlet M39

= ES
+ S

01-130070 00

Page 47
from 565

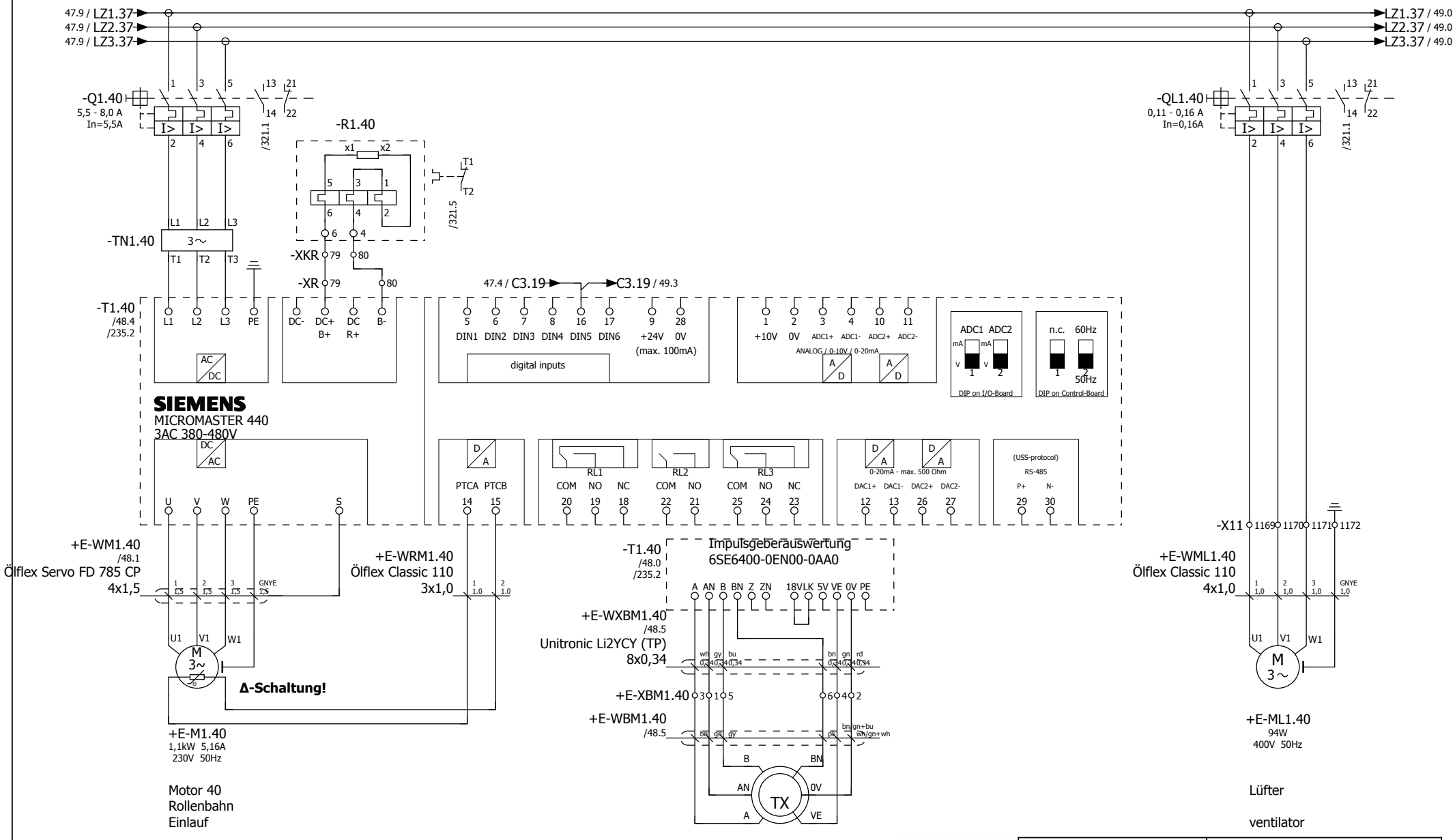

47

49

Management codes				Document identification				
5.3.0.0	CE	000	DW	QTPC	L04	ROSL	D	0049
System	Phase	Area	Typology	Project	Lot	Company	D/S	Number

						Date	30.01.2012	
						Dus		
Rev.	Date	Description	Prepared	Checked	Approved			

Duferco (SBM 2) Schaltschrank

in place of | Replaced by

RÖSLER finding a better way ...

load circuit
roll conveyor inlet M40

= ES
+ S

01-130070 00

Page 48
from 565

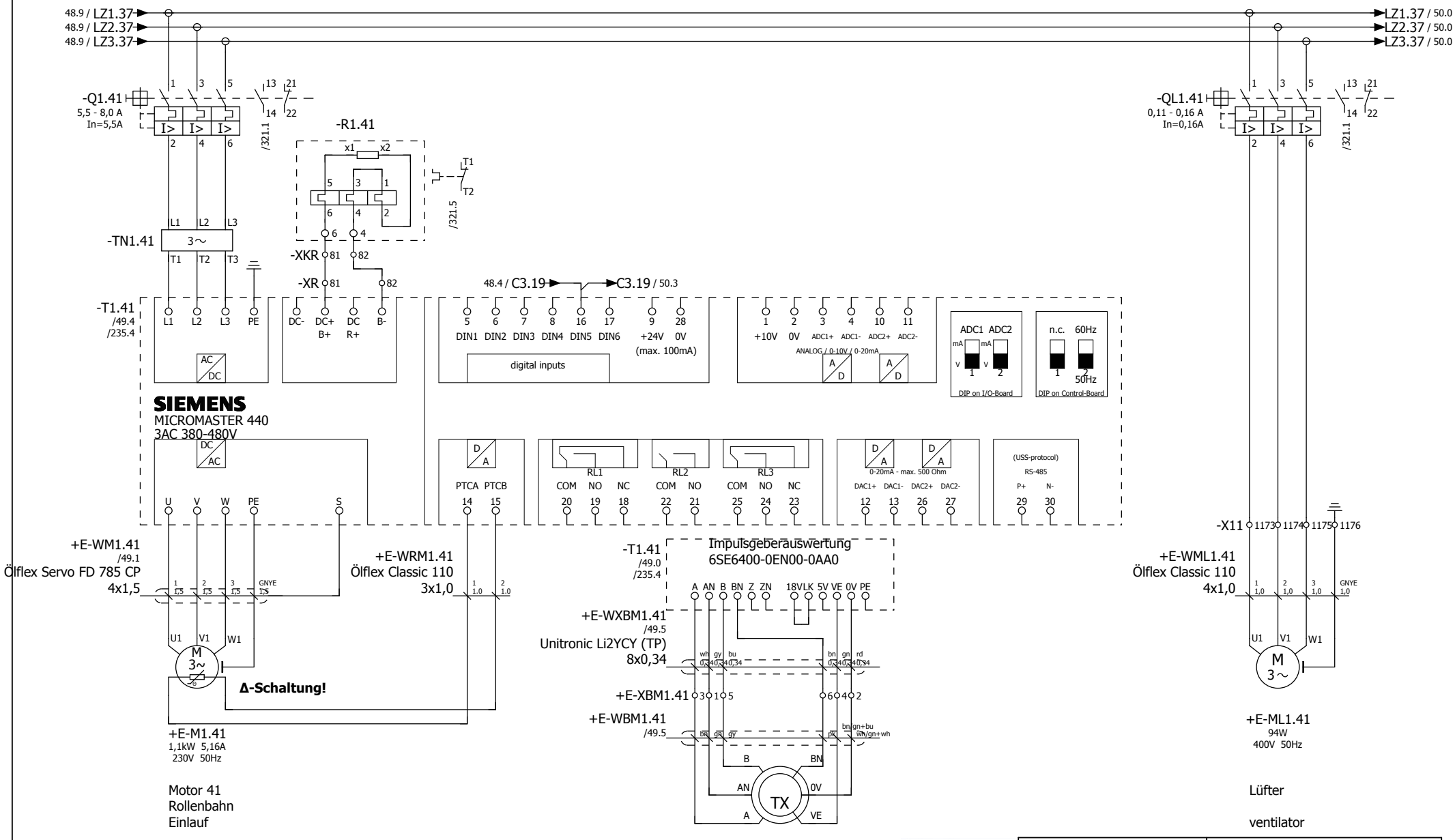

Management codes				Document identification				
5.3.0.0	CE	000	DW	QTPC	L04	ROSL	D	0049
System	Phase	Area	Typology	Project	Lot	Company	D/S	Number

48 50

Rev.	Date	Description	Prepared	Checked	Approved			
						Date	30.01.2012	
						Dus		

Duferco (SBM 2) Schaltschrank

in place of | Replaced by

RÖSLER finding a better way ...

load circuit
roll conveyor inlet M41

= ES
+ S

01-130070 00

Page 49
from 565

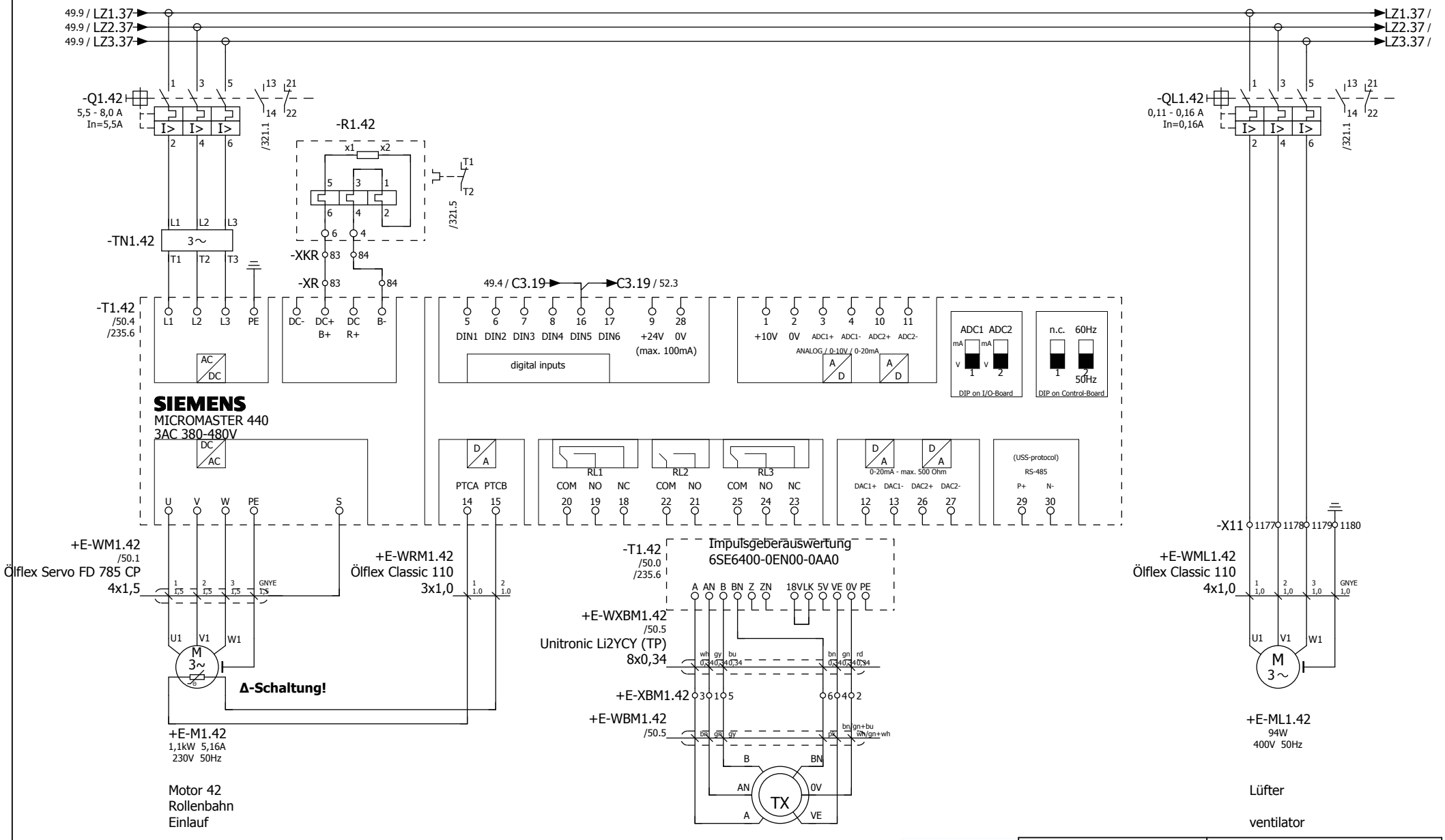

49

51

Management codes				Document identification				
5.3.0.0	CE	000	DW	QTPC	L04	ROSL	D	0049
System	Phase	Area	Typology	Project	Lot	Company	D/S	Number

Duferco Clabecq

						Date	30.01.2012	
						Dus		
Rev.	Date	Description	Prepared	Checked	Approved			

Duferco (SBM 2) Schaltschrank

in place of | Replaced by

RÖSLER finding a better way ...

load circuit
roll conveyor inlet M42

= ES
+ S

01-130070 00

Page 50
from 565

Zuleitung
Frequenzumrichter
Einlauf M43 - M48

input lead
frequency converter
inlet M43 - M48

Duferco Clabecq

Management codes				Document identification				
5.3.0.0	CE	000	DW	QTPC	L04	ROSL	D	0049
System	Phase	Area	Typology	Project	Lot	Company	D/S	Number

50 52

Rev.	Date	Description	Prepared	Checked	Approved			
						Date	30.01.2012	
						Dus		

Duferco (SBM 2) Schaltschrank
in place of | Replaced by

RÖSLER finding a better way ...

load circuit
input lead FU M43 - M48

= ES
+ S

01-130070 00

Page 51
from 565

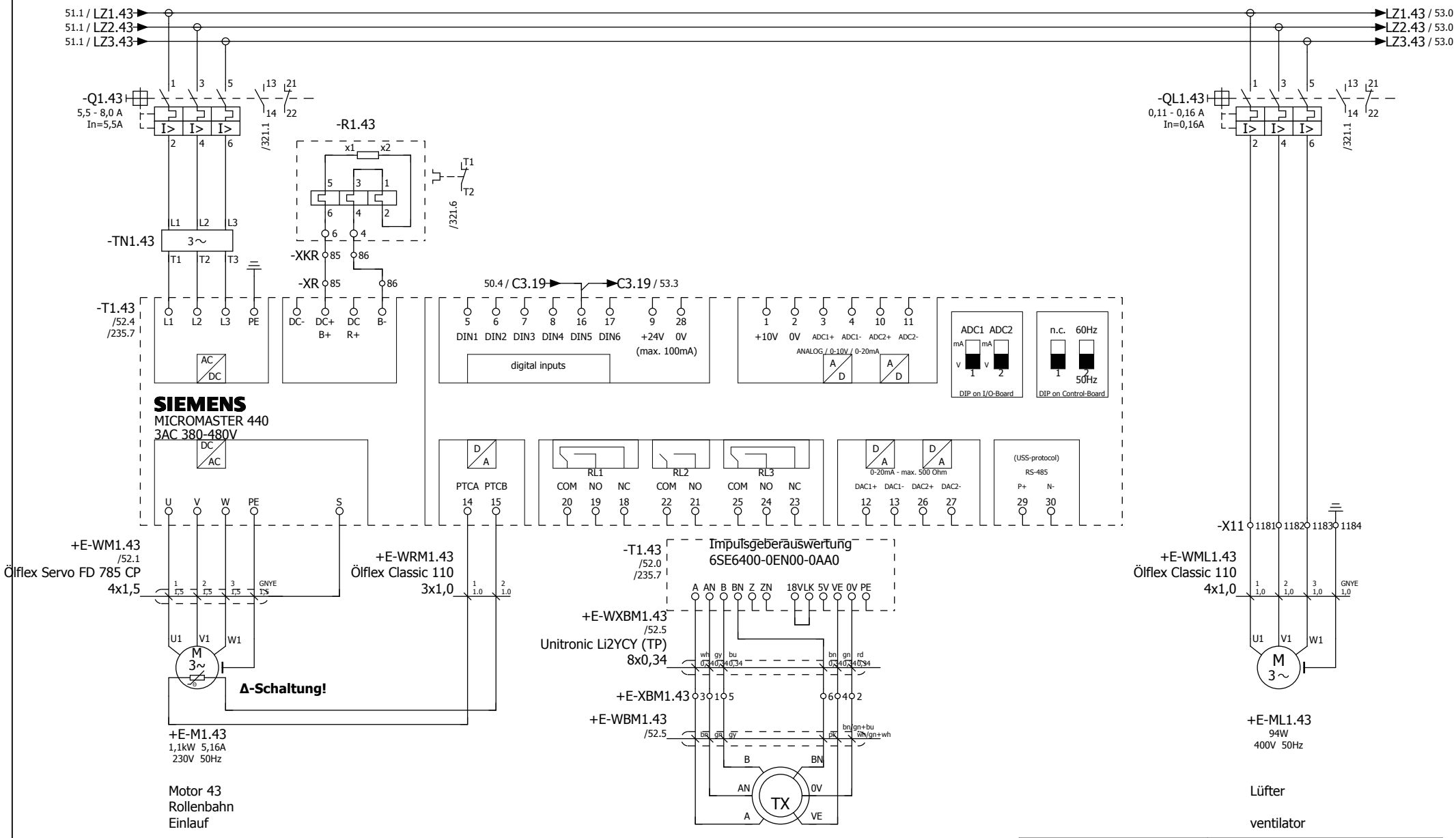

Management codes				Document identification				
5.3.0.0	CE	000	DW	QTPC	L04	ROSL	D	0049
System	Phase	Area	Typology	Project	Lot	Company	D/S	Number

51 53

						Date	30.01.2012	
						Dus		
Rev.	Date	Description	Prepared	Checked	Approved			

Duferco (SBM 2) Schaltschrank

in place of | Replaced by

RÖSLER finding a better way ...

load circuit
roll conveyor inlet M43

= ES
+ S

01-130070 00

Page 52
from 565

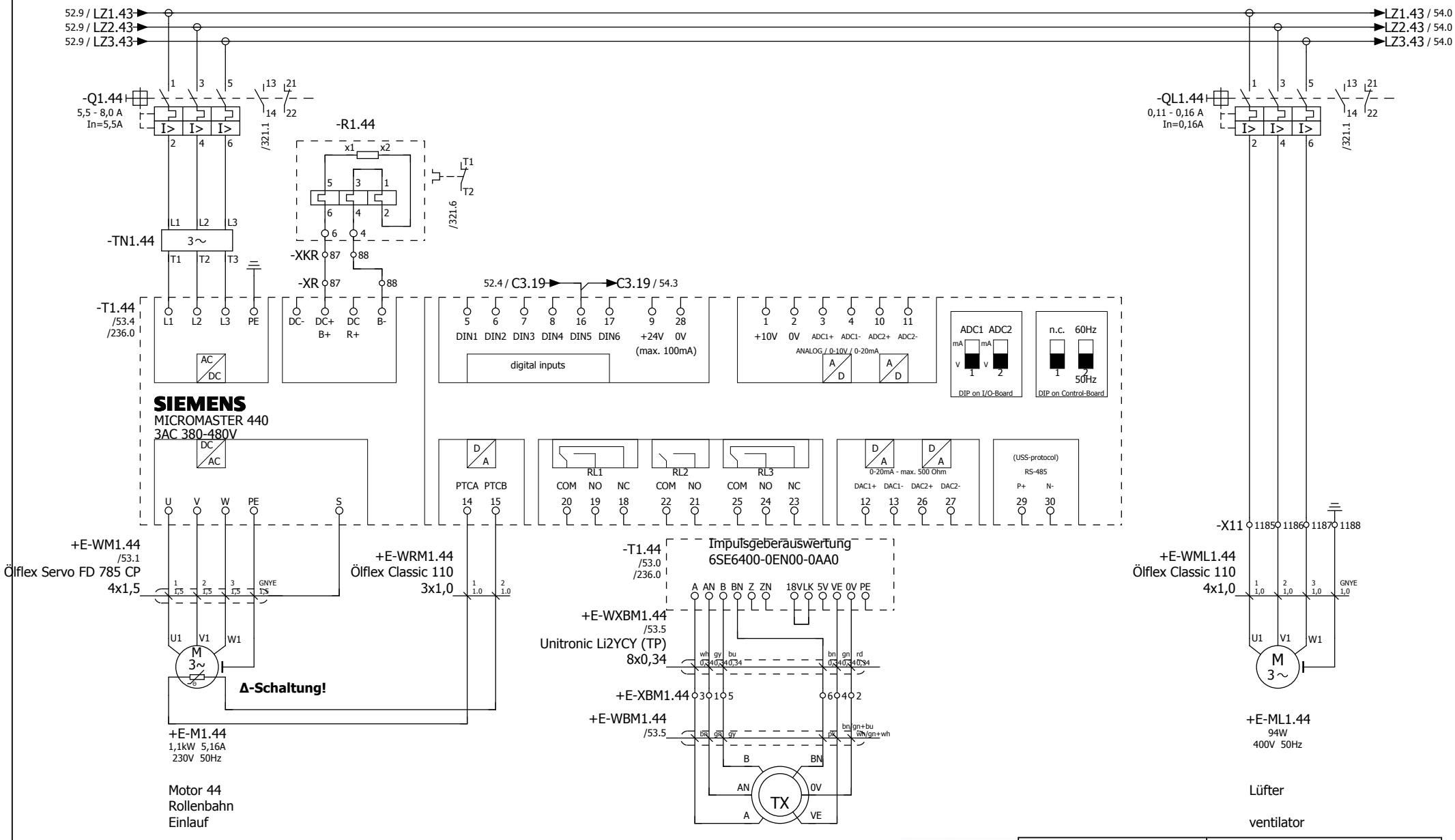

52

54

Management codes				Document identification				
5.3.0.0	CE	000	DW	QTPC	L04	ROSL	D	0049
System	Phase	Area	Typology	Project	Lot	Company	D/S	Number

Duferco Clabecq

						Date	30.01.2012	
						Dus		
Rev.	Date	Description	Prepared	Checked	Approved			

Duferco (SBM 2) Schaltschrank

in place of | Replaced by

RÖSLER finding a better way ...

load circuit
roll conveyor inlet M44

= ES
+ S

01-130070 00

Page 53
from 565

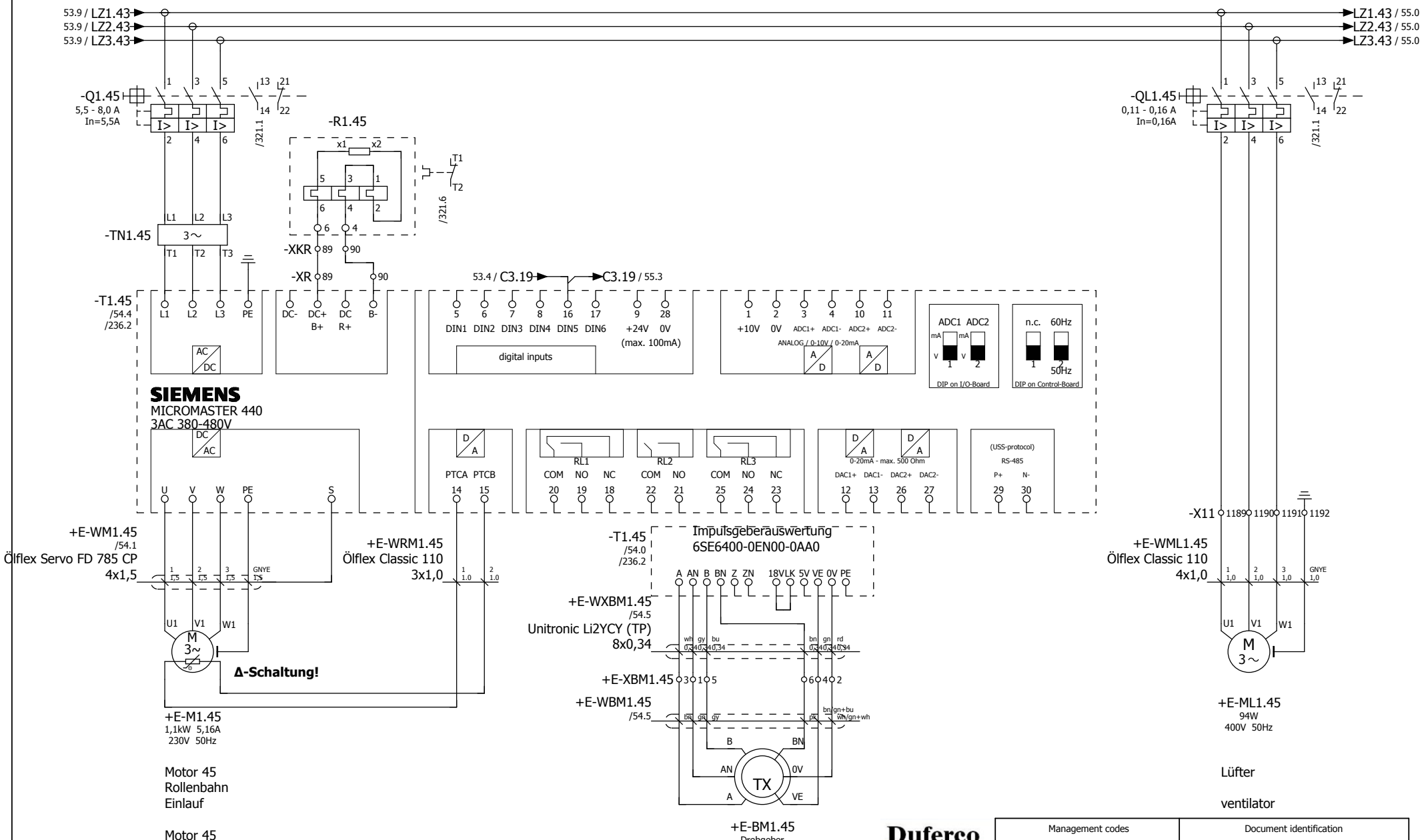

53

55

Duferco Clabecq

Management codes				Document identification				
5.3.0.0	CE	000	DW	QTPC	L04	ROSL	D	0049
System	Phase	Area	Typology	Project	Lot	Company	D/S	Number

						Date	30.01.2012	
						Dus		
Rev.	Date	Description	Prepared	Checked	Approved			

Duferco (SBM 2) Schaltschrank

in place of | Replaced by

RÖSLER finding a better way ...

load circuit
roll conveyor inlet M45

= ES
+ S

01-130070 00

Page 54
from 565

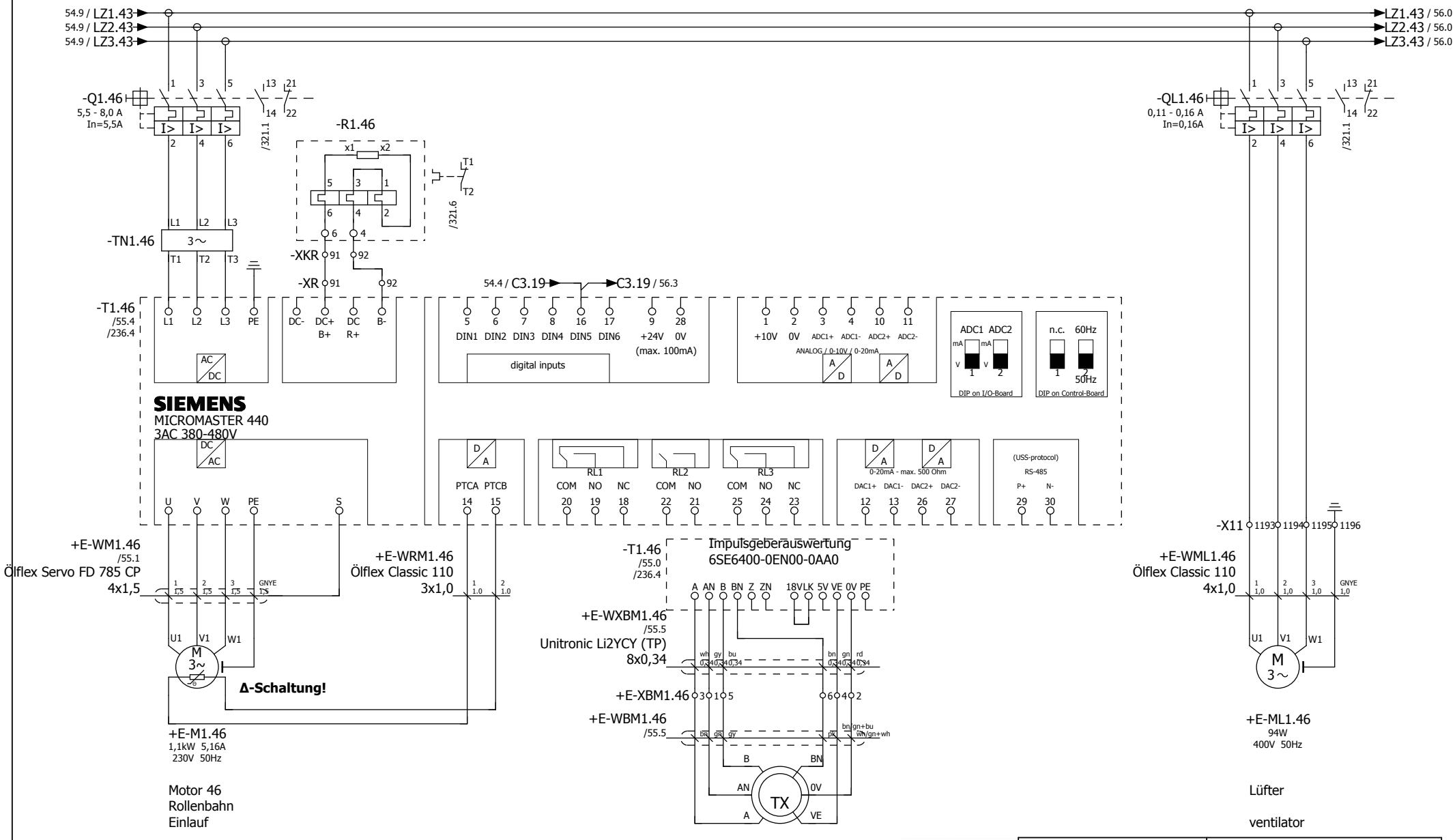

54

56

Duferco Clabecq

Management codes				Document identification				
5.3.0.0	CE	000	DW	QTPC	L04	ROSL	D	0049
System	Phase	Area	Typology	Project	Lot	Company	D/S	Number

						Date	30.01.2012	
						Dus		
Rev.	Date	Description	Prepared	Checked	Approved			

Duferco (SBM 2) Schaltschrank

in place of | Replaced by

RÖSLER finding a better way ...

load circuit
roll conveyor inlet M46

= ES
+ S

01-130070 00

Page 55
from 565

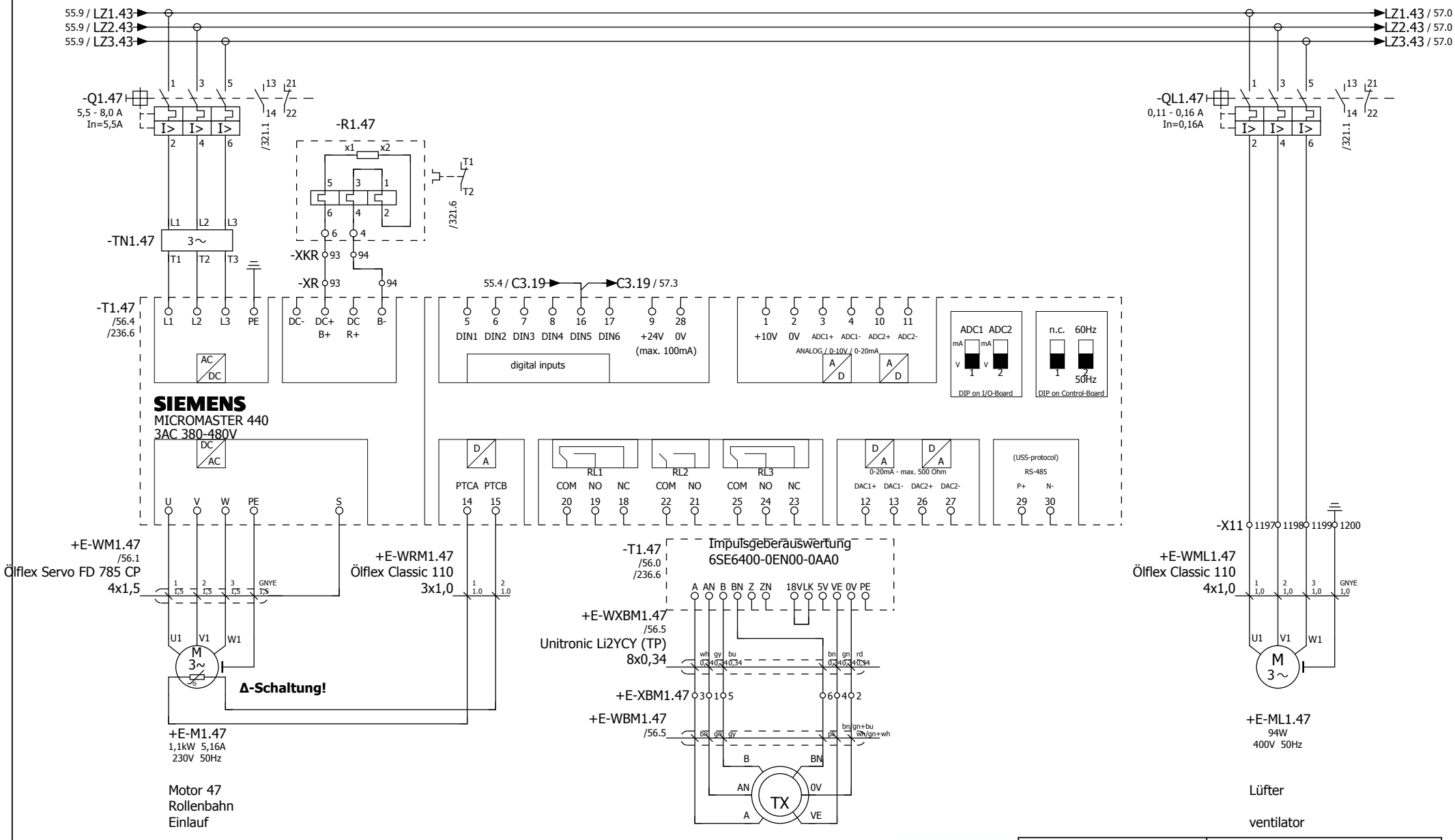

55

57

Duferco Clabecq

Management codes				Document identification				
5.3.0.0	CE	000	DW	QTPC	L04	ROSL	D	0049
System	Phase	Area	Typology	Project	Lot	Company	D/S	Number

						Date	30.01.2012	
						Dus		
Rev.	Date	Description	Prepared	Checked	Approved			

Duferco (SBM 2) Schaltschrank

in place of | Replaced by

RÖSLER finding a better way ...

load circuit
roll conveyor inlet M47

= ES
+ S

01-130070 00

Page 56
from 565

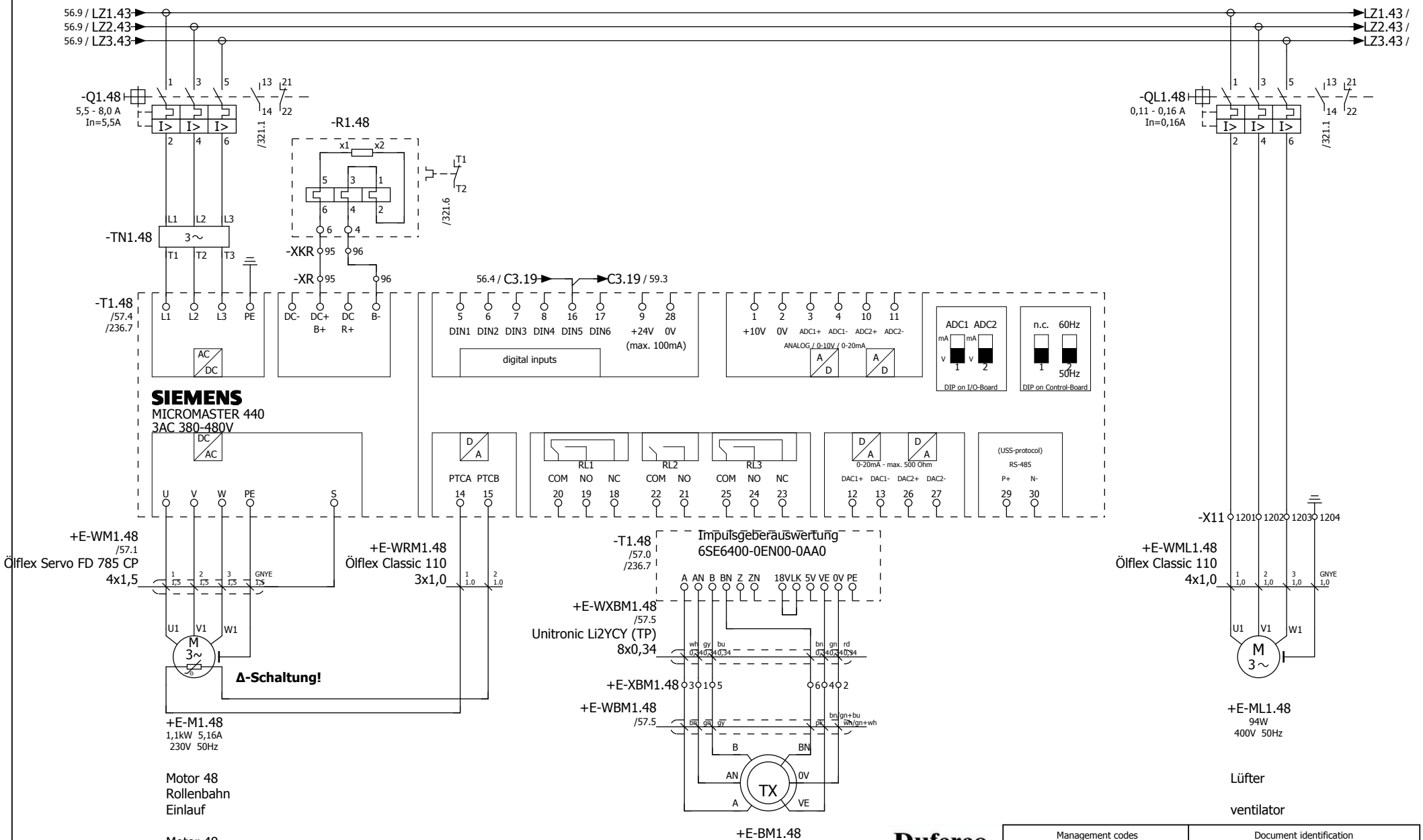

56

58

Management codes				Document identification				
5.3.0.0	CE	000	DW	QTPC	L04	ROSL	D	0049
System	Phase	Area	Typology	Project	Lot	Company	D/S	Number

						Date	30.01.2012	
						Dus		
Rev.	Date	Description	Prepared	Checked	Approved			

Duferco (SBM 2) Schaltschrank

in place of | Replaced by

RÖSLER finding a better way ...

load circuit
roll conveyor inlet M48

= ES
+ S

01-130070 00

Page 57
from 565

Zuleitung
Frequenzumrichter
Einlauf M49 - M54

input lead
frequency converter
inlet M49 - M54

Duferco Clabecq

Management codes				Document identification				
5.3.0.0	CE	000	DW	QTPC	L04	ROSL	D	0049
System	Phase	Area	Typology	Project	Lot	Company	D/S	Number

57 59

Rev.	Date	Description	Prepared	Checked	Approved	Date 30.01.2012 Dus	Duferco (SBM 2) Schaltschrank	RÖSLER finding a better way ...	load circuit input lead FU M49 - M54	= ES + S	01-130070 00	Page 58 from 565
							in place of	Replaced by				

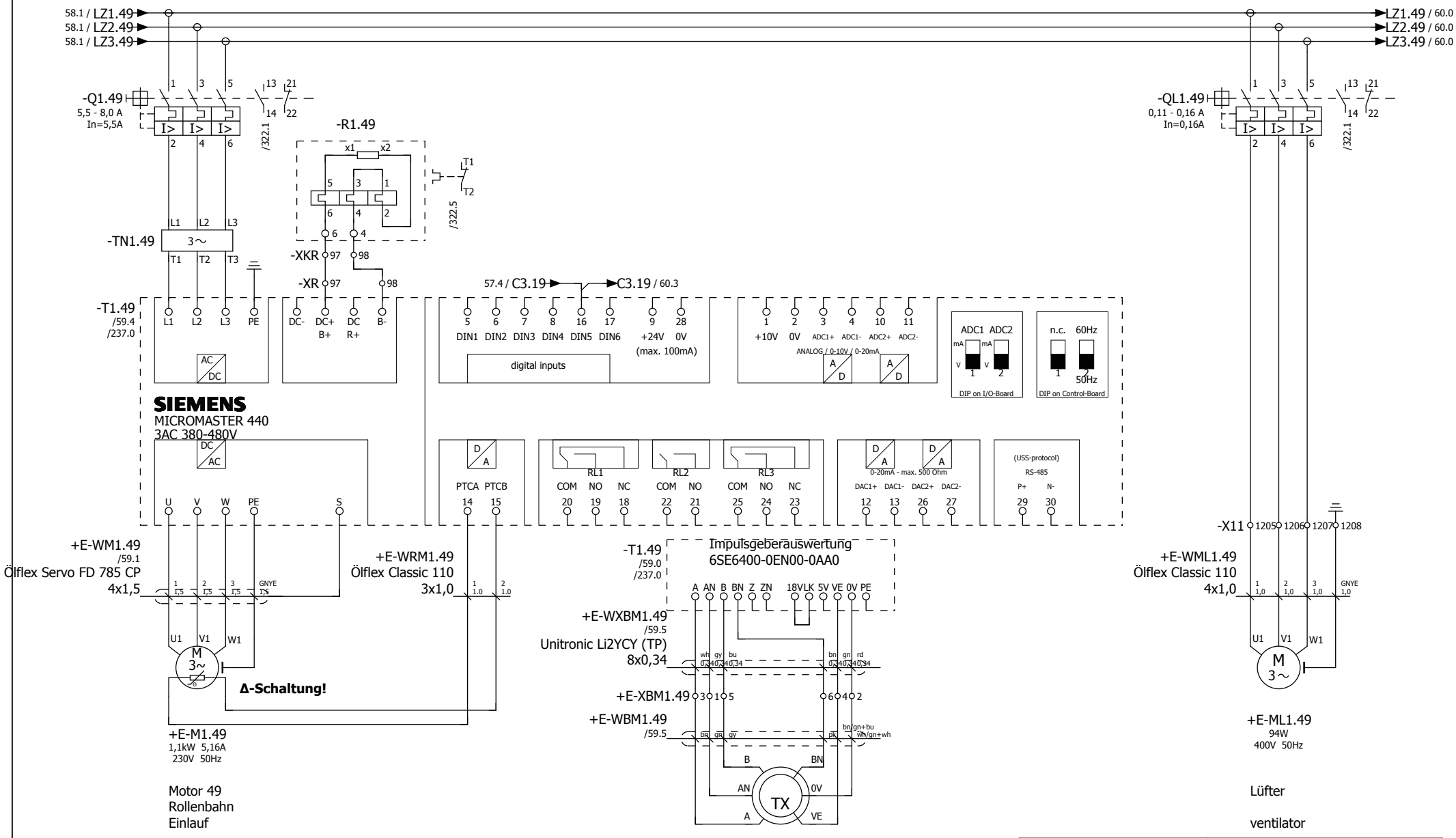

58

60

Management codes				Document identification				
5.3.0.0	CE	000	DW	QTPC	L04	ROSL	D	0049
System	Phase	Area	Typology	Project	Lot	Company	D/S	Number

						Date	30.01.2012	
						Dus		
Rev.	Date	Description	Prepared	Checked	Approved			

Duferco (SBM 2) Schaltschrank

in place of | Replaced by

RÖSLER finding a better way ...

load circuit
roll conveyor inlet M49

= ES
+ S

01-130070 00

Page 59
from 565

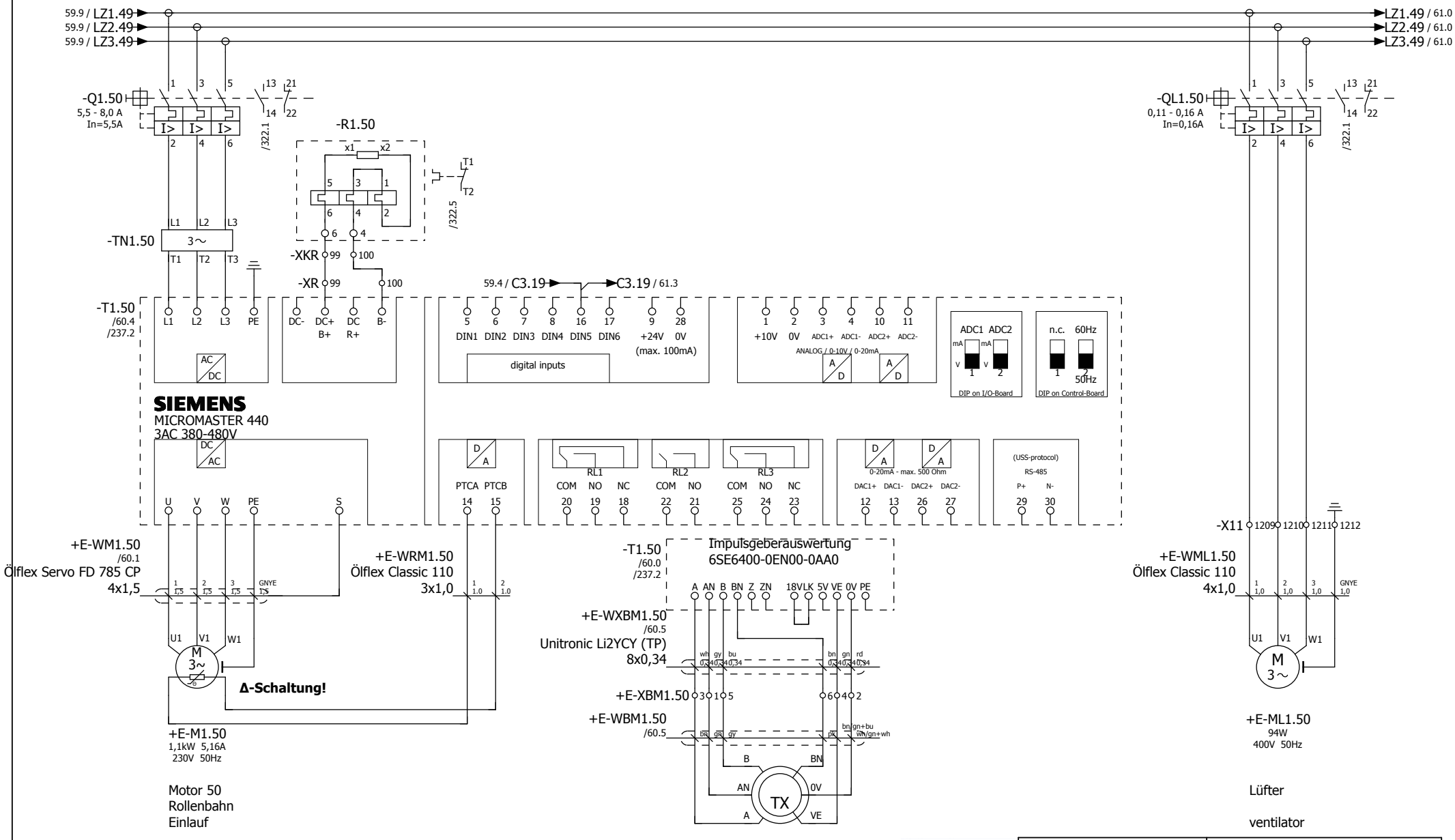

Management codes				Document identification				
5.3.0.0	CE	000	DW	QTPC	L04	ROSL	D	0049
System	Phase	Area	Typology	Project	Lot	Company	D/S	Number

Duferco Clabecq

59 61

Rev.	Date	Description	Prepared	Checked	Approved			
						Date	30.01.2012	
						Dus		

Duferco (SBM 2) Schaltschrank

in place of | Replaced by

RÖSLER finding a better way ...

load circuit
roll conveyor inlet M50

= ES
+ S

01-130070 00

Page 60
from 565

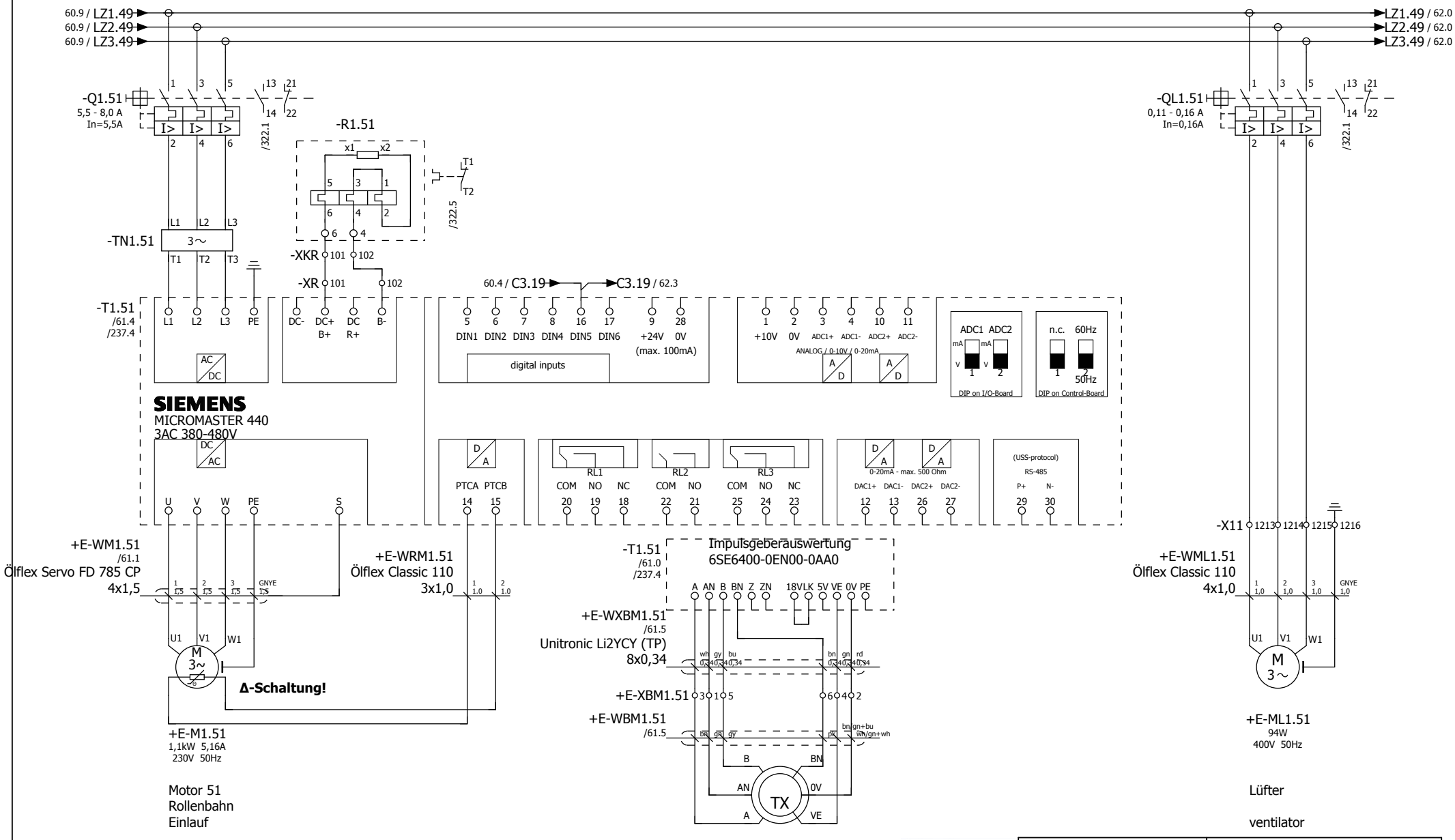

60

62

Duferco Clabecq

Management codes				Document identification				
5.3.0.0	CE	000	DW	QTPC	L04	ROSL	D	0049
System	Phase	Area	Typology	Project	Lot	Company	D/S	Number

						Date	30.01.2012	
						Dus		
Rev.	Date	Description	Prepared	Checked	Approved			

Duferco (SBM 2) Schaltschrank

in place of | Replaced by

RÖSLER finding a better way ...

load circuit
roll conveyor inlet M51

= ES
+ S

01-130070 00

Page 61
from 565

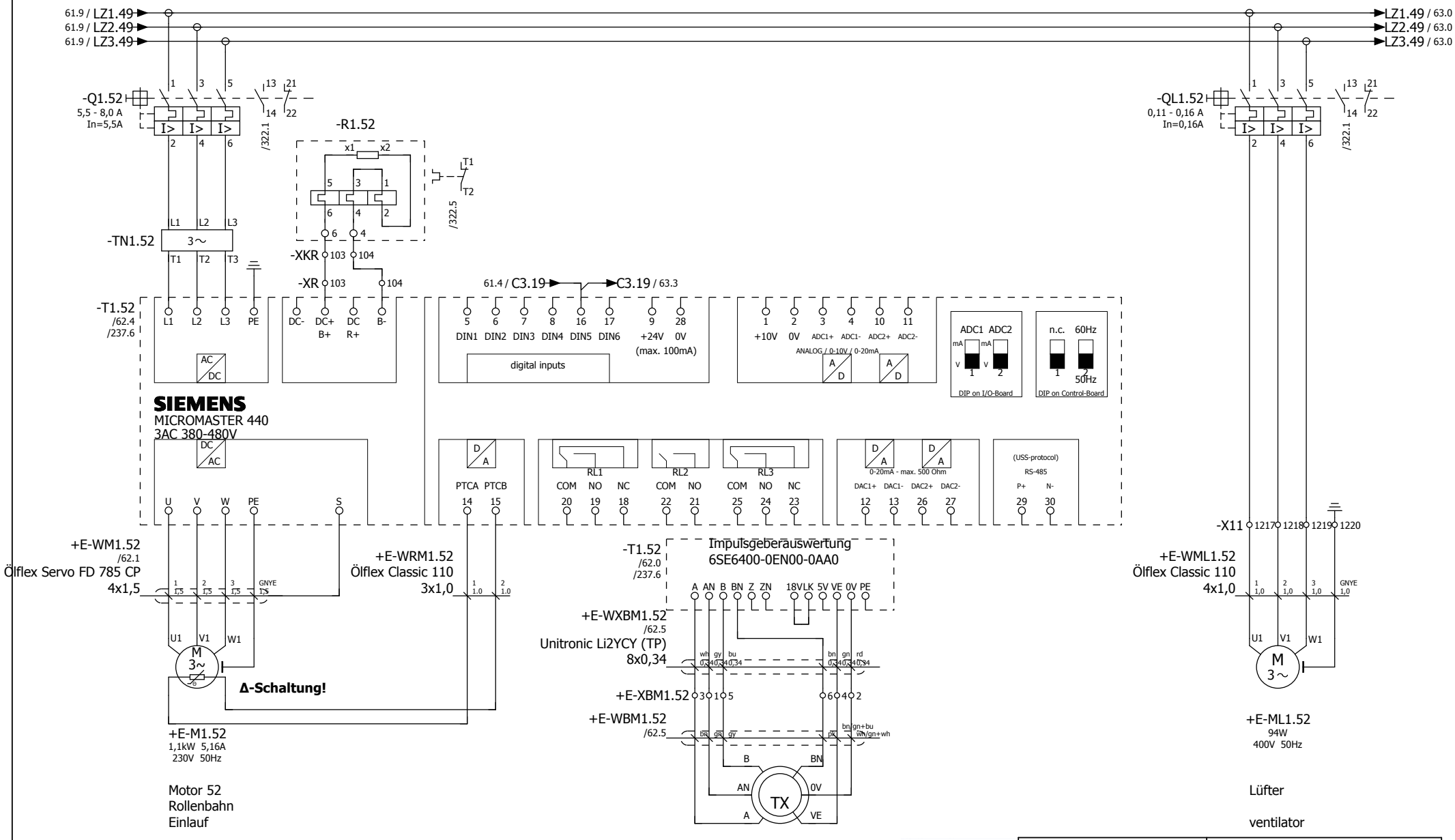

61

63

Duferco Clabecq

Management codes				Document identification				
5.3.0.0	CE	000	DW	QTPC	L04	ROSL	D	0049
System	Phase	Area	Typology	Project	Lot	Company	D/S	Number

						Date	30.01.2012	
						Dus		
Rev.	Date	Description	Prepared	Checked	Approved			

Duferco (SBM 2) Schaltschrank

in place of | Replaced by

RÖSLER finding a better way ...

load circuit
roll conveyor inlet M52

= ES
+ S

01-130070 00

Page 62
from 565

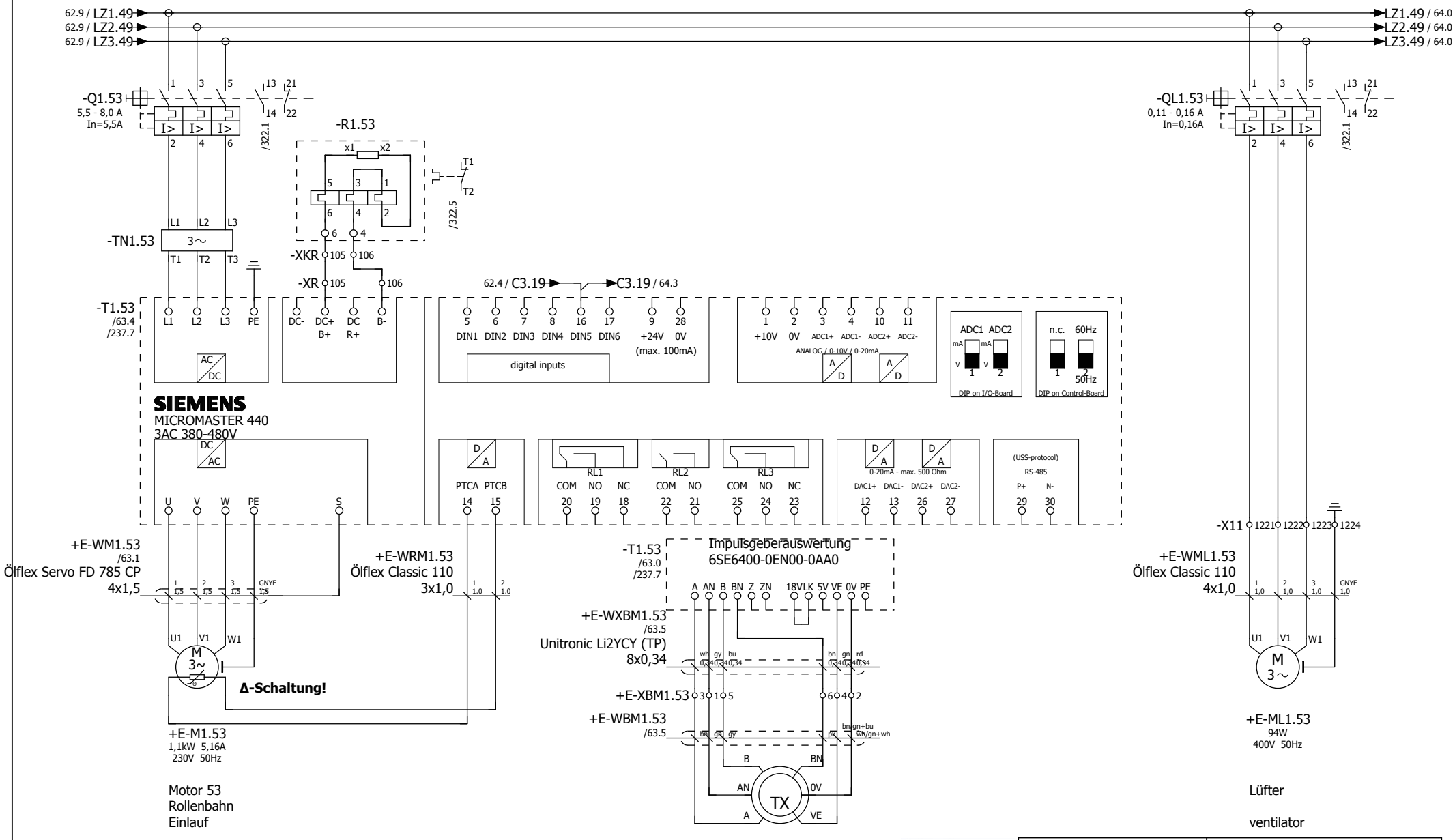

62

64

Management codes				Document identification				
5.3.0.0	CE	000	DW	QTPC	L04	ROSL	D	0049
System	Phase	Area	Typology	Project	Lot	Company	D/S	Number

Duferco Clabecq

Rev.	Date	Description	Prepared	Checked	Approved			
						Date	30.01.2012	
						Dus		

Duferco (SBM 2) Schaltschrank

in place of | Replaced by

RÖSLER finding a better way ...

load circuit
roll conveyor inlet M53

= ES
+ S

01-130070 00

Page 63
from 565

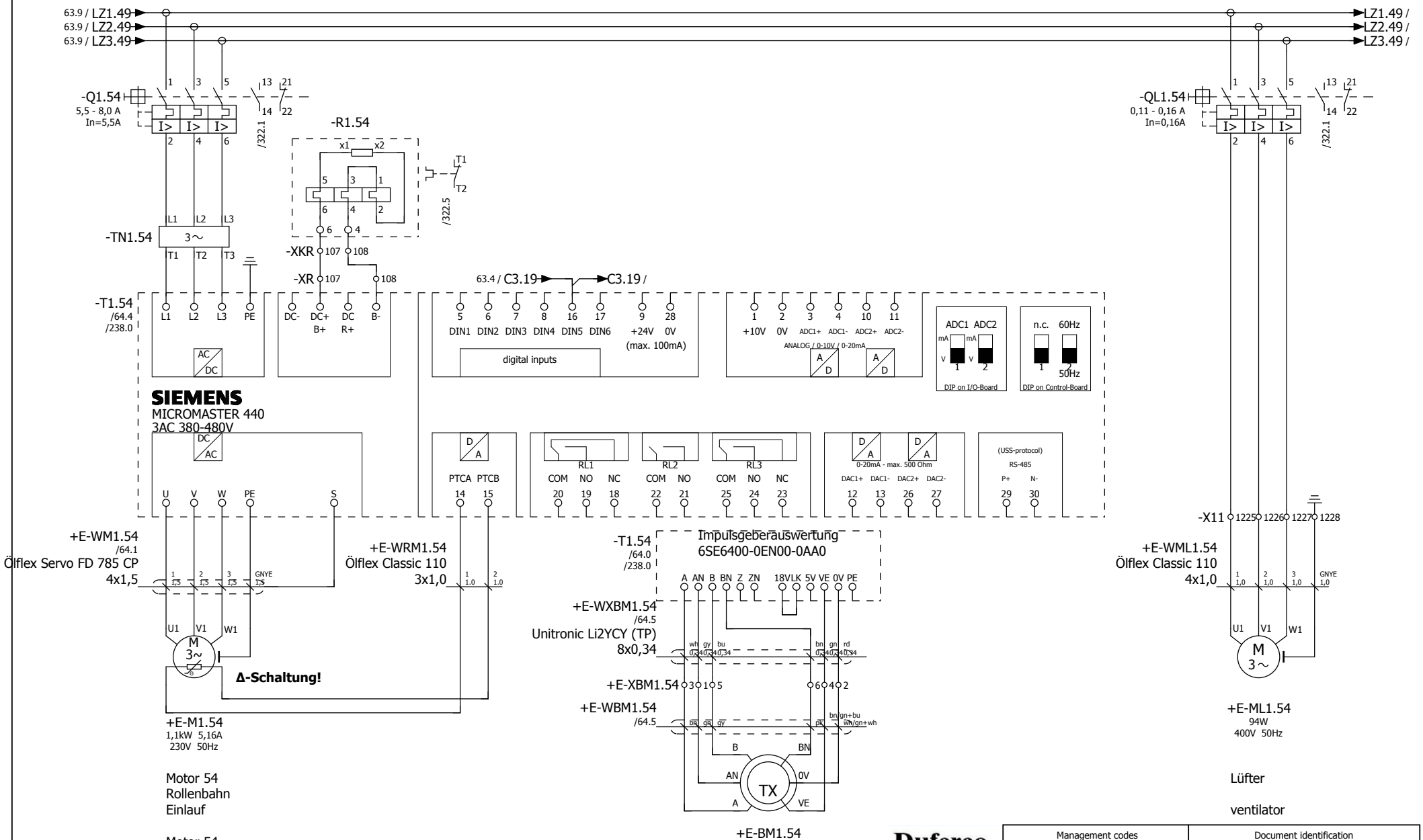

63

65

Duferco Clabecq

Management codes				Document identification				
5.3.0.0	CE	000	DW	QTPC	L04	ROSL	D	0049
System	Phase	Area	Typology	Project	Lot	Company	D/S	Number

						Date	30.01.2012	
						Dus		
Rev.	Date	Description	Prepared	Checked	Approved			

Duferco (SBM 2) Schaltschrank

in place of | Replaced by

RÖSLER finding a better way ...

load circuit
roll conveyor inlet M54

= ES
+ S

01-130070 00

Page 64
from 565

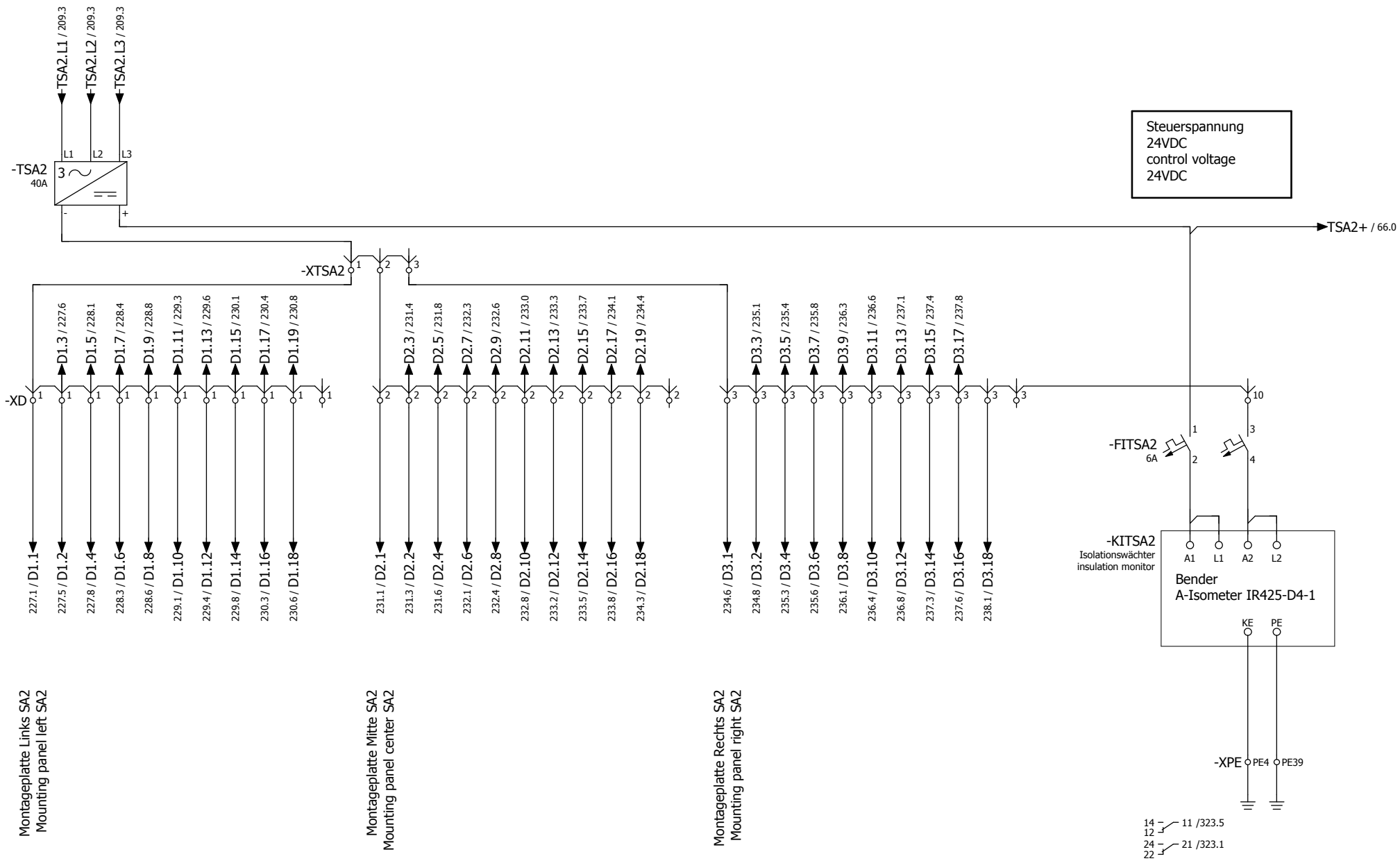

Duferco Clabecq

Management codes				Document identification				
5.3.0.0	CE	000	DW	QTPC	L04	ROSL	D	0049
System	Phase	Area	Typology	Project	Lot	Company	D/S	Number

64 66

Rev.	Date	Description	Prepared	Checked	Approved			
						Date	30.01.2012	
						Dus		
							Duferco (SBM 2) Schaltschrank	
							in place of	Replaced by

RÖSLER finding a better way ...

Control
Power supply unit SA2

= ES
+ S

01-130070 00

Page 65
from 565

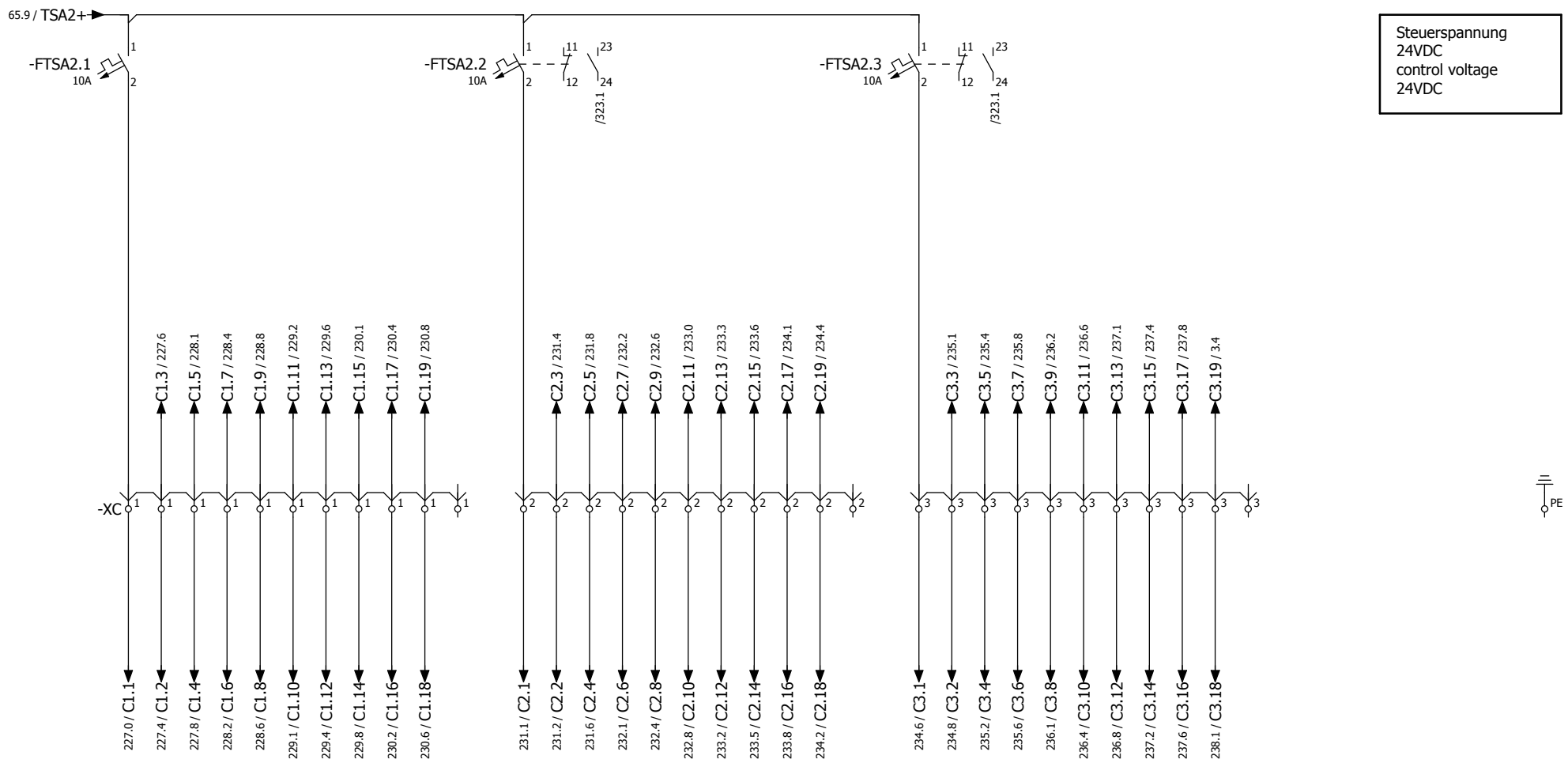

Management codes				Document identification				
5.3.0.0	CE	000	DW	QTPC	L04	ROSL	D	0049
System	Phase	Area	Typology	Project	Lot	Company	D/S	Number

Duferco Clabecq

65 67

Rev.	Date	Description	Prepared	Checked	Approved			
						Date	30.01.2012	
						Dus		

Duferco (SBM 2) Schaltschrank

in place of | Replaced by

RÖSLER finding a better way ...

Control
Power supply unit SA2

= ES
+ S

01-130070 00

Page 66
from 565

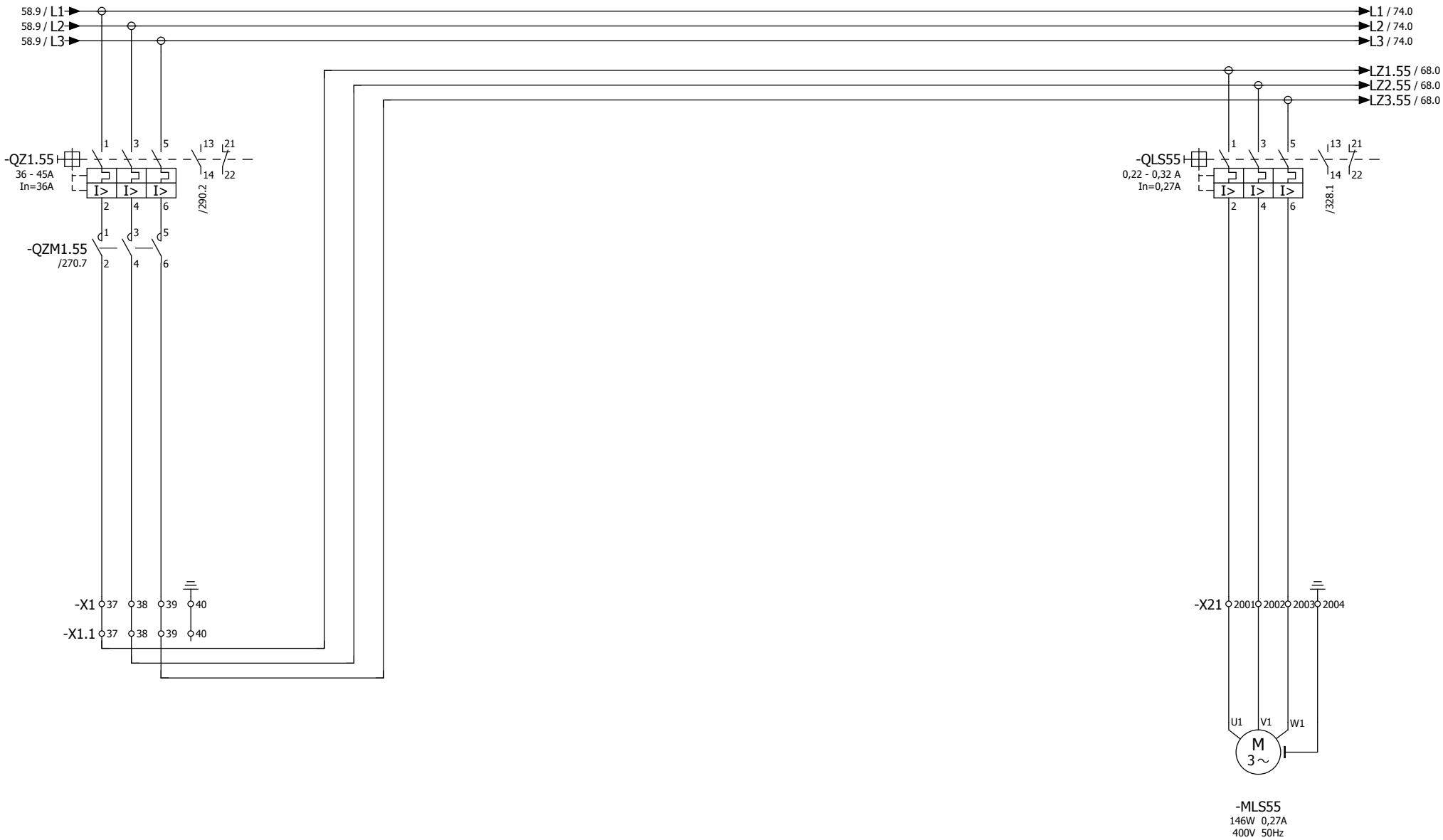

Zuleitung
Frequenzumrichter
Einlauf M55 - M60

input lead
frequency converter
inlet M55 - M60

Lüfter
Schaltschrank
ventilator
Enclosure

Duferco Clabecq

Management codes				Document identification				
5.3.0.0	CE	000	DW	QTPC	L04	ROSL	D	0049
System	Phase	Area	Typology	Project	Lot	Company	D/S	Number

66 68

Rev.	Date	Description	Prepared	Checked	Approved			
						Date	30.01.2012	
						Dus		

Duferco (SBM 2) Schaltschrank
in place of | Replaced by

RÖSLER finding a better way ...

load circuit
input lead FU M55 - M60

= ES
+ S

01-130070 00

Page 67
from 565

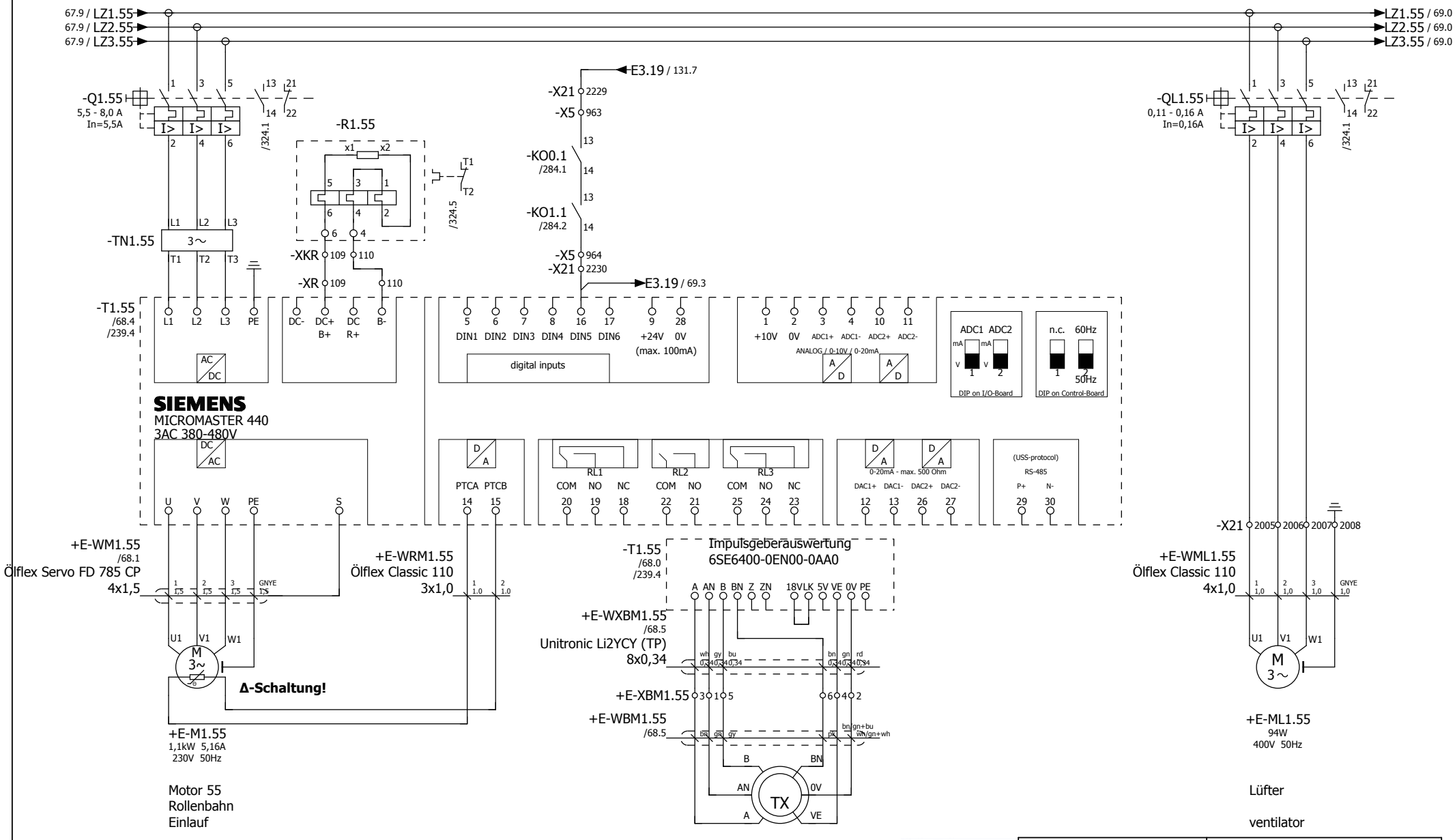

Duferco Clabecq

Management codes				Document identification				
5.3.0.0	CE	000	DW	QTPC	L04	ROSL	D	0049
System	Phase	Area	Typology	Project	Lot	Company	D/S	Number

67 69

						Date	30.01.2012	
						Dus		
Rev.	Date	Description	Prepared	Checked	Approved			

Duferco (SBM 2) Schaltschrank

in place of | Replaced by

RÖSLER finding a better way ...

load circuit
roll conveyor inlet M55

= ES
+ S

01-130070 00

Page 68
from 565

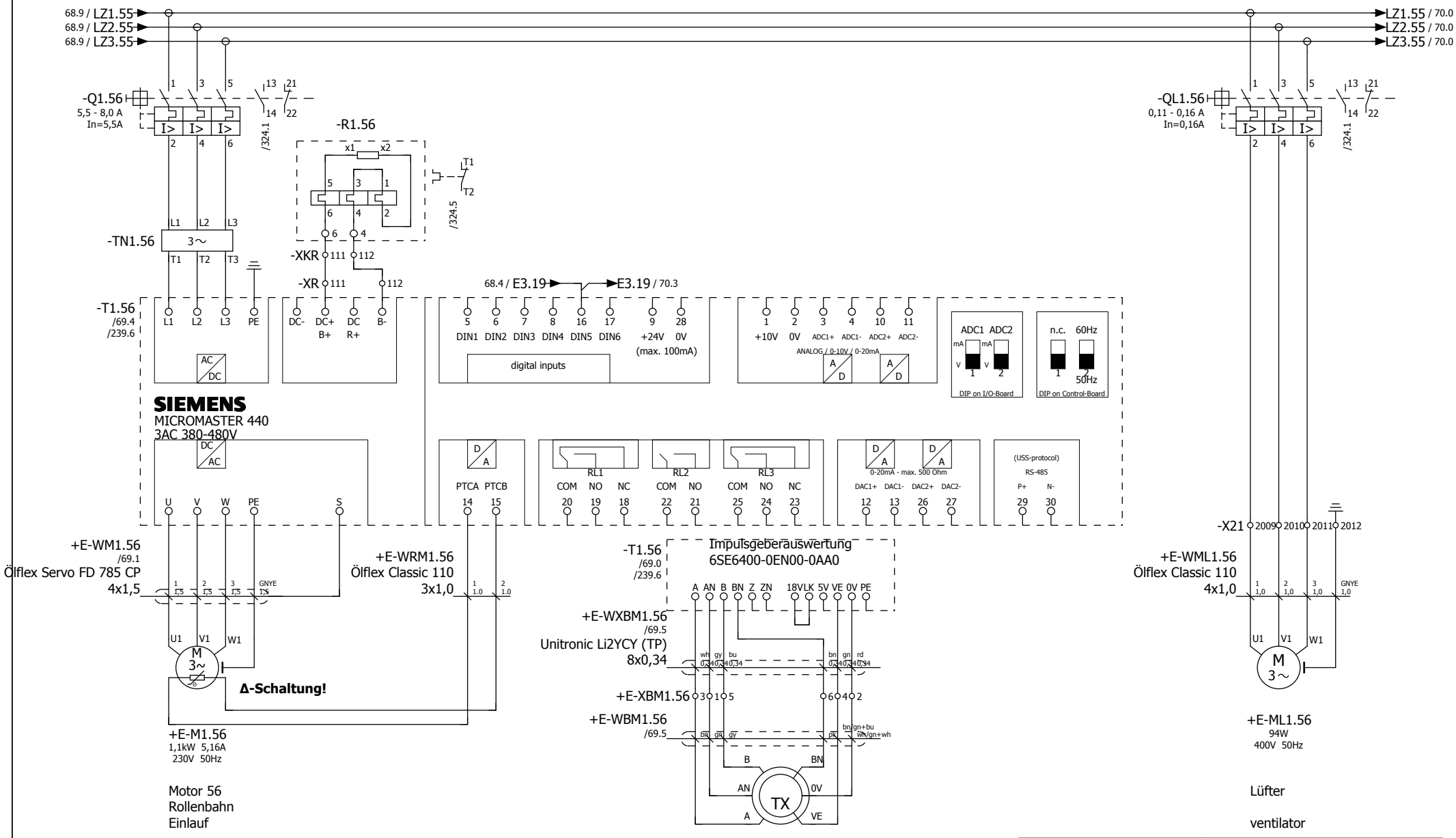

68

70

Duferco Clabecq

Management codes				Document identification				
5.3.0.0	CE	000	DW	QTPC	L04	ROSL	D	0049
System	Phase	Area	Typology	Project	Lot	Company	D/S	Number

						Date	30.01.2012	
						Dus		
Rev.	Date	Description	Prepared	Checked	Approved			

Duferco (SBM 2) Schaltschrank

in place of | Replaced by

RÖSLER finding a better way ...

load circuit
roll conveyor inlet M56

= ES
+ S

01-130070 00

Page 69
from 565

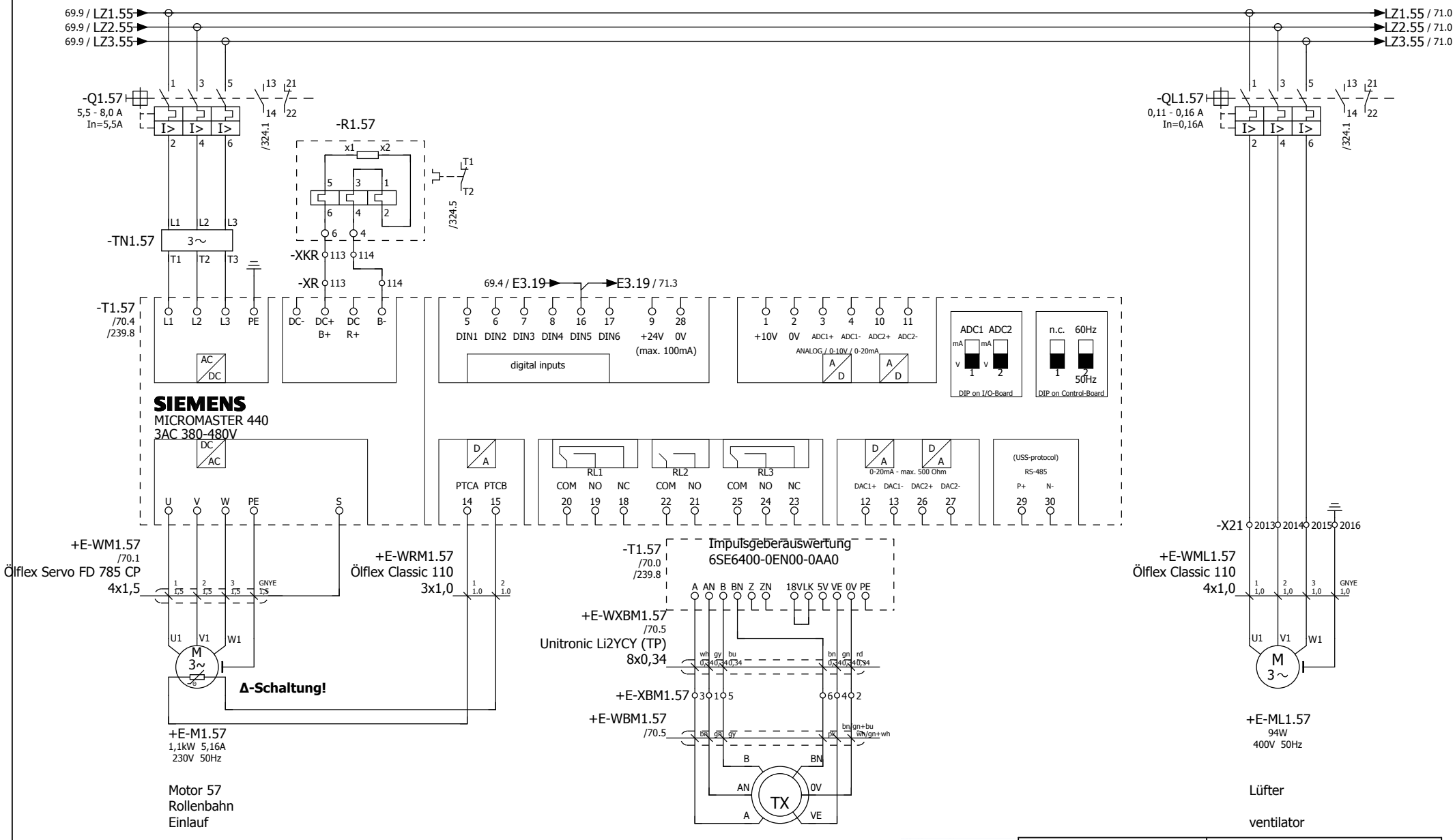

69

71

Duferco Clabecq

Management codes				Document identification				
5.3.0.0	CE	000	DW	QTPC	L04	ROSL	D	0049
System	Phase	Area	Typology	Project	Lot	Company	D/S	Number

						Date	30.01.2012	
						Dus		
Rev.	Date	Description	Prepared	Checked	Approved			

Duferco (SBM 2) Schaltschrank

in place of | Replaced by

RÖSLER finding a better way ...

load circuit
roll conveyor inlet M57

= ES
+ S

01-130070 00

Page 70
from 565

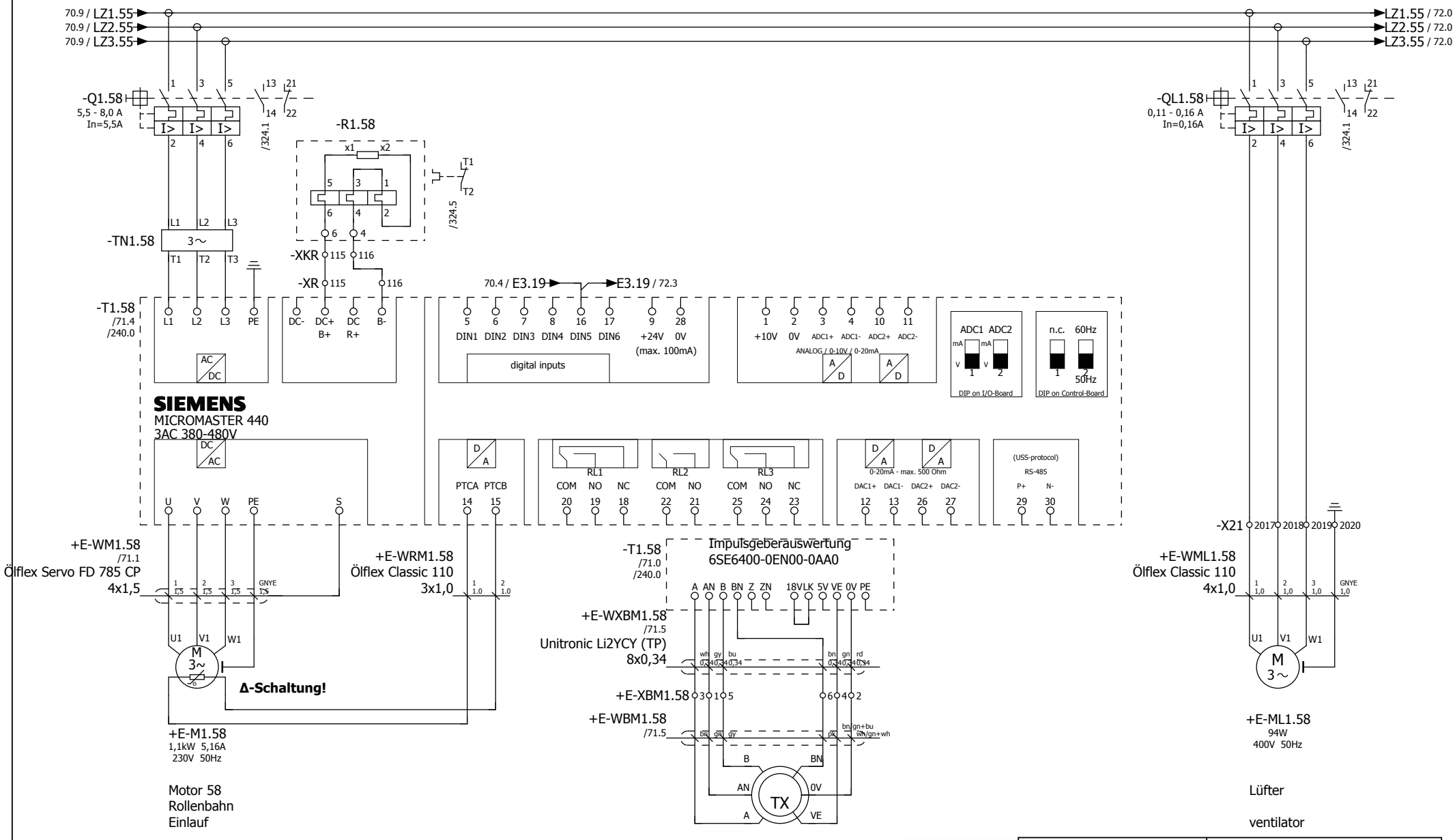

70

72

Management codes				Document identification				
5.3.0.0	CE	000	DW	QTPC	L04	ROSL	D	0049
System	Phase	Area	Typology	Project	Lot	Company	D/S	Number

Duferco Clabecq

						Date	30.01.2012	
						Dus		
Rev.	Date	Description	Prepared	Checked	Approved			

Duferco (SBM 2) Schaltschrank

in place of | Replaced by

RÖSLER finding a better way ...

load circuit
roll conveyor inlet M58

= ES
+ S

01-130070 00

Page 71
from 565

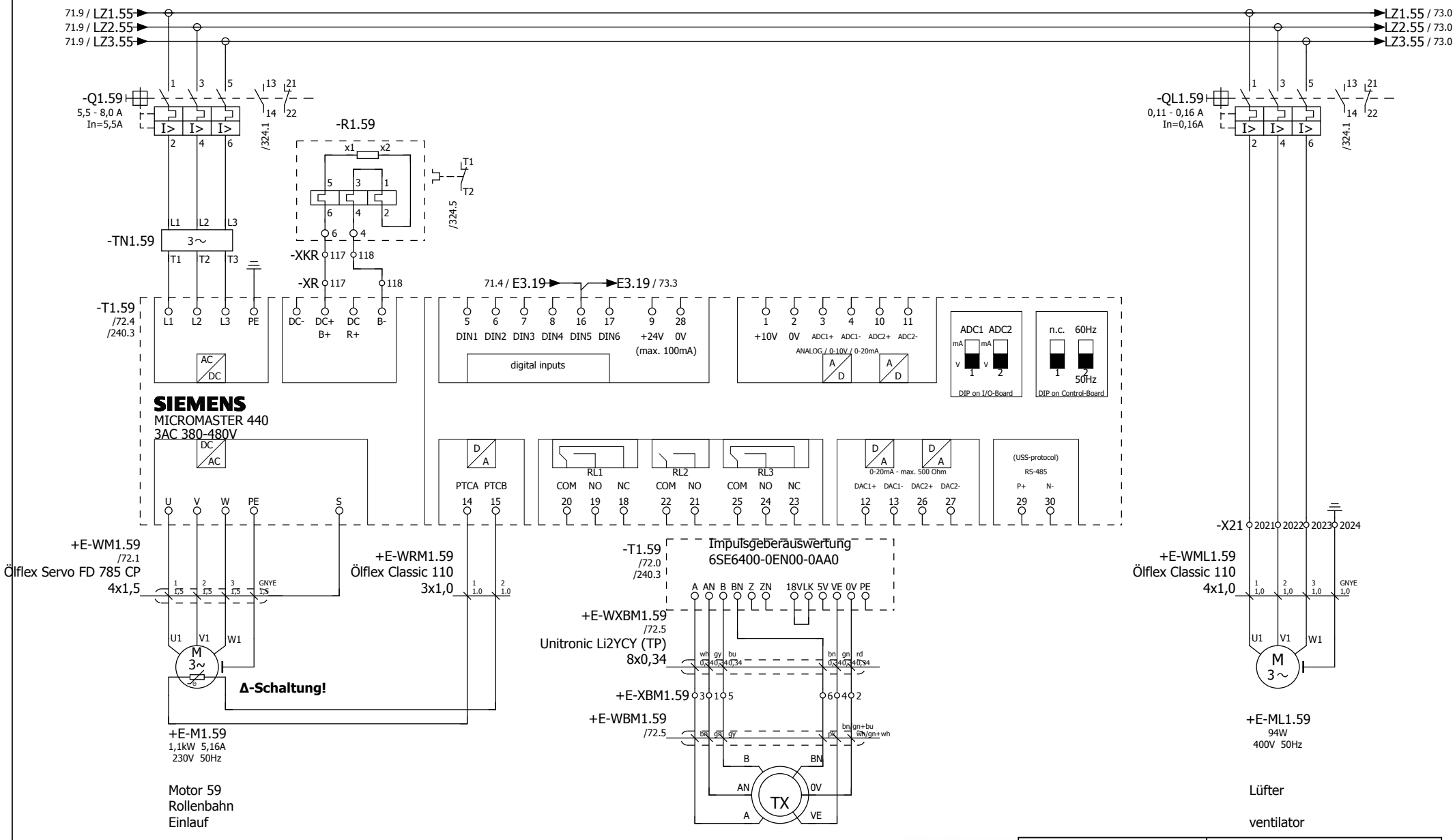

71

73

Duferco Clabecq

Management codes				Document identification				
5.3.0.0	CE	000	DW	QTPC	L04	ROSL	D	0049
System	Phase	Area	Typology	Project	Lot	Company	D/S	Number

						Date	30.01.2012	
						Dus		
Rev.	Date	Description	Prepared	Checked	Approved			

Duferco (SBM 2) Schaltschrank

in place of | Replaced by

RÖSLER finding a better way ...

load circuit
roll conveyor inlet M59

= ES
+ S

01-130070 00

Page 72
from 565

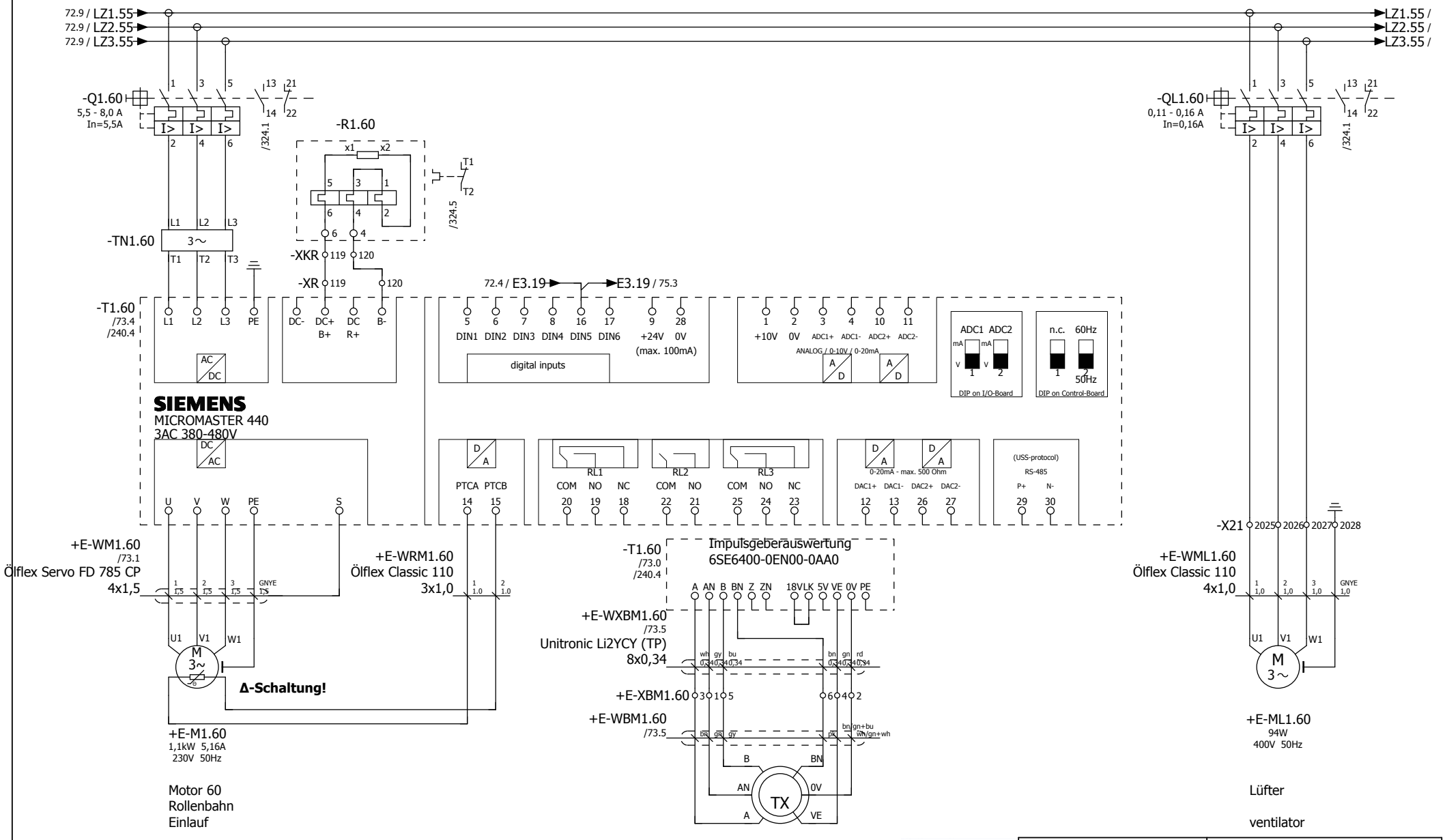

Management codes				Document identification				
5.3.0.0	CE	000	DW	QTPC	L04	ROSL	D	0049
System	Phase	Area	Typology	Project	Lot	Company	D/S	Number

Duferco Clabecq

72 74

Rev.	Date	Description	Prepared	Checked	Approved			
						Date	30.01.2012	
						Dus		

Duferco (SBM 2) Schaltschrank

in place of | Replaced by

RÖSLER finding a better way ...

load circuit
roll conveyor inlet M60

= ES
+ S

01-130070 00

Page 73
from 565

Zuleitung
Frequenzumrichter
Einlauf M61 - M66

input lead
frequency converter
inlet M61 - M66

Duferco Clabecq

Management codes				Document identification				
5.3.0.0	CE	000	DW	QTPC	L04	ROSL	D	0049
System	Phase	Area	Typology	Project	Lot	Company	D/S	Number

Rev.	Date	Description	Prepared	Checked	Approved			
						Date	30.01.2012	
						Dus		

Duferco (SBM 2) Schaltschrank

in place of | Replaced by

RÖSLER finding a better way ...

load circuit
input lead FU M61 - M66

= ES
+ S

01-130070 00

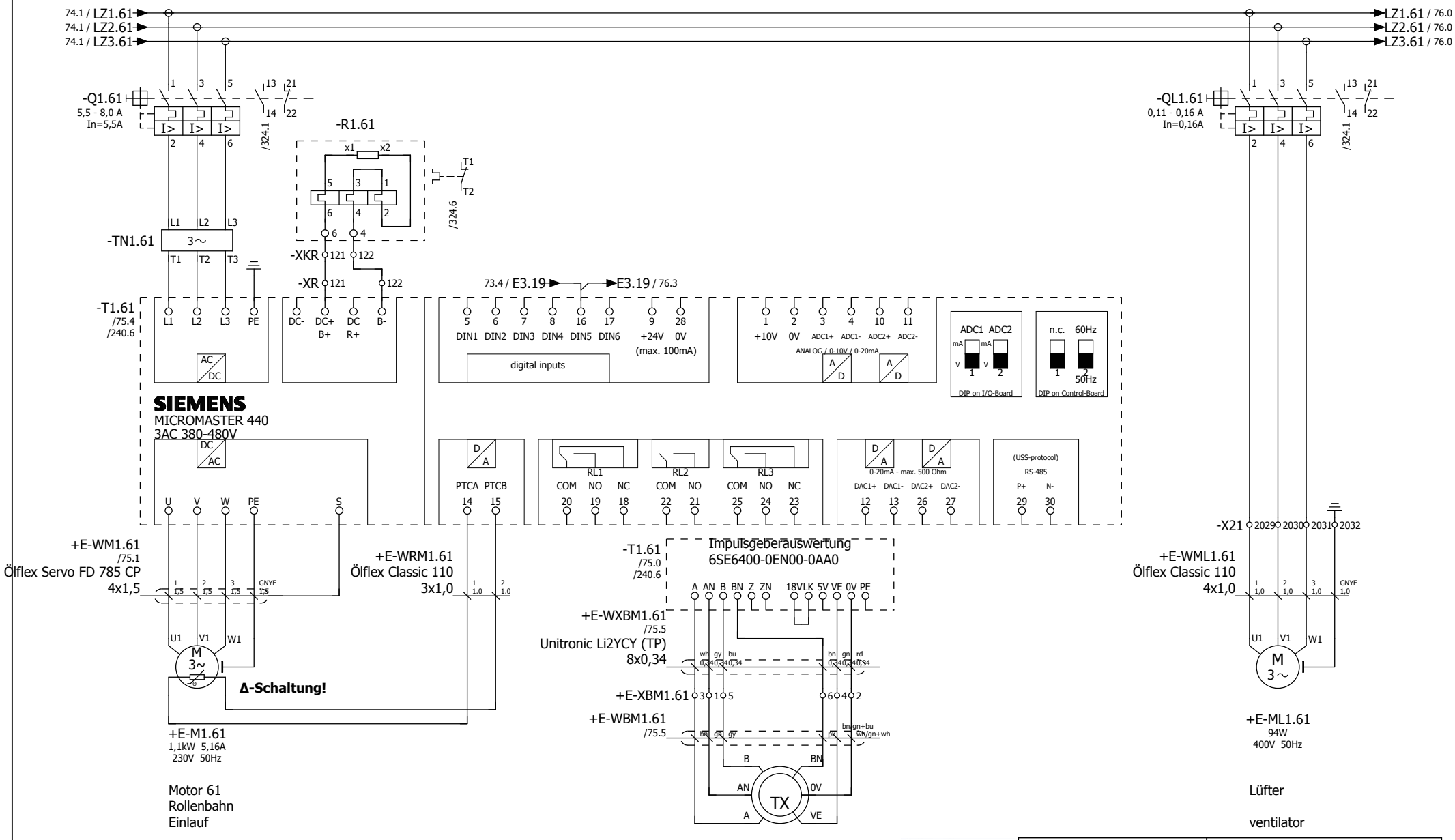

Management codes				Document identification				
5.3.0.0	CE	000	DW	QTPC	L04	ROSL	D	0049
System	Phase	Area	Typology	Project	Lot	Company	D/S	Number

Duferco Clabecq

74 76

Rev.	Date	Description	Prepared	Checked	Approved			
						Date	30.01.2012	
						Dus		

Duferco (SBM 2) Schaltschrank

in place of | Replaced by

RÖSLER finding a better way ...

load circuit
roll conveyor inlet M61

= ES
+ S

01-130070 00

Page 75
from 565

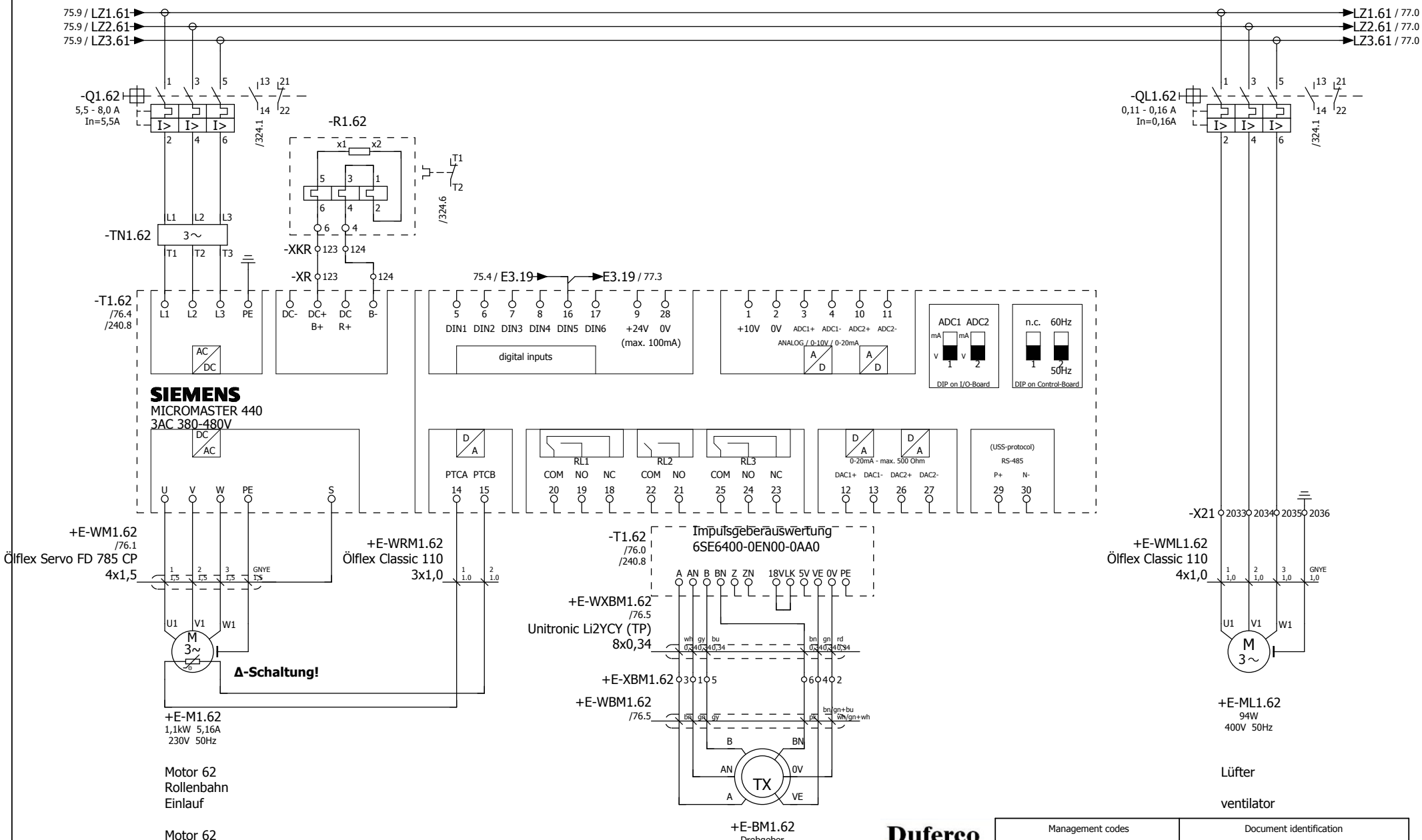

Management codes				Document identification				
5.3.0.0	CE	000	DW	QTPC	L04	ROSL	D	0049
System	Phase	Area	Typology	Project	Lot	Company	D/S	Number

75 77

Rev.	Date	Description	Prepared	Checked	Approved			
						Date	30.01.2012	
						Dus		

Duferco (SBM 2) Schaltschrank

in place of | Replaced by

RÖSLER finding a better way ...

load circuit
roll conveyor inlet M62

= ES
+ S

01-130070 00

Page 76
from 565

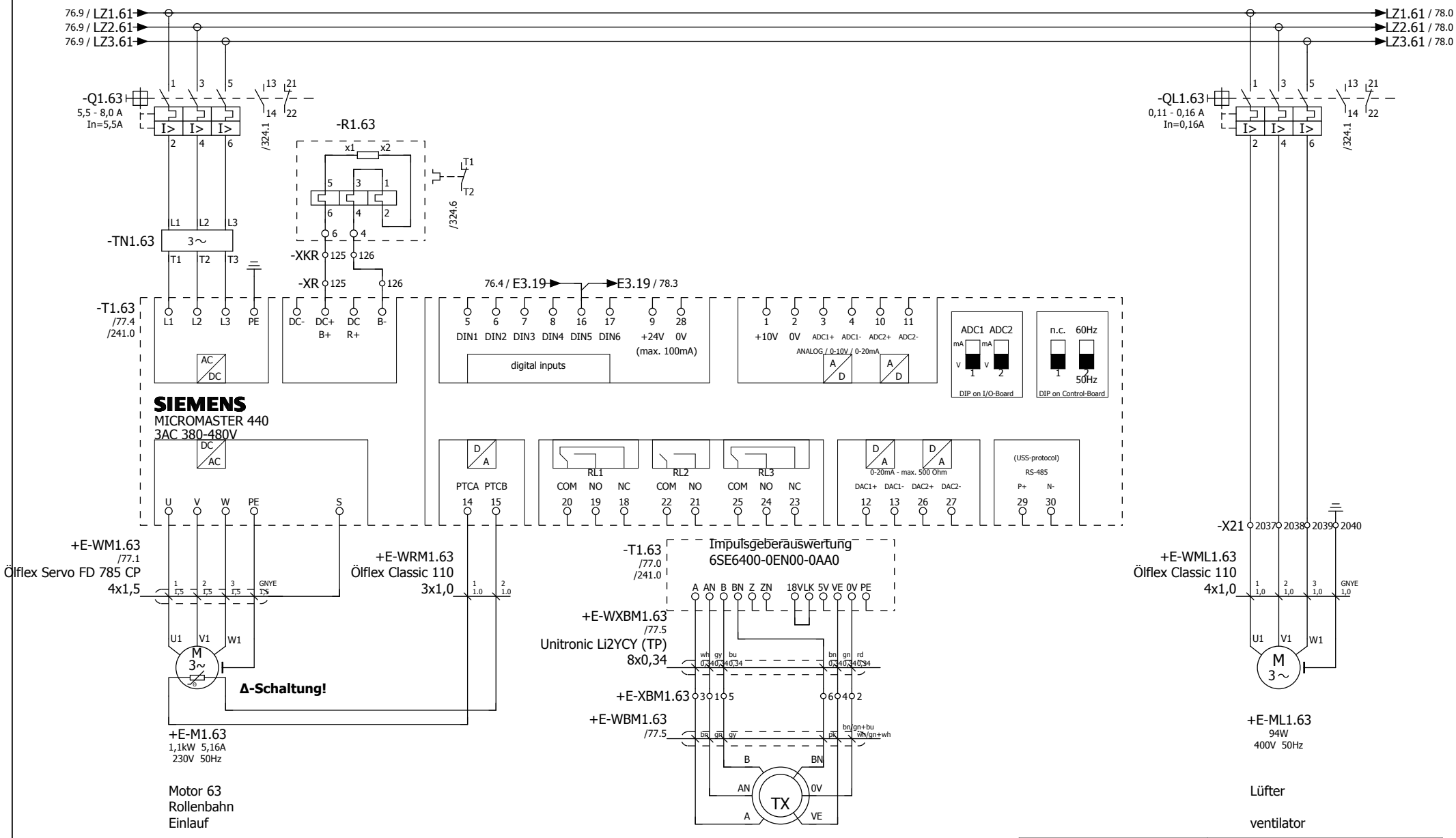

76

78

Management codes				Document identification				
5.3.0.0	CE	000	DW	QTPC	L04	ROSL	D	0049
System	Phase	Area	Typology	Project	Lot	Company	D/S	Number

						Date	30.01.2012	
						Dus		
Rev.	Date	Description	Prepared	Checked	Approved			

Duferco (SBM 2) Schaltschrank

in place of | Replaced by

RÖSLER finding a better way ...

load circuit
roll conveyor inlet M63

= ES
+ S

01-130070 00

Page 77
from 565

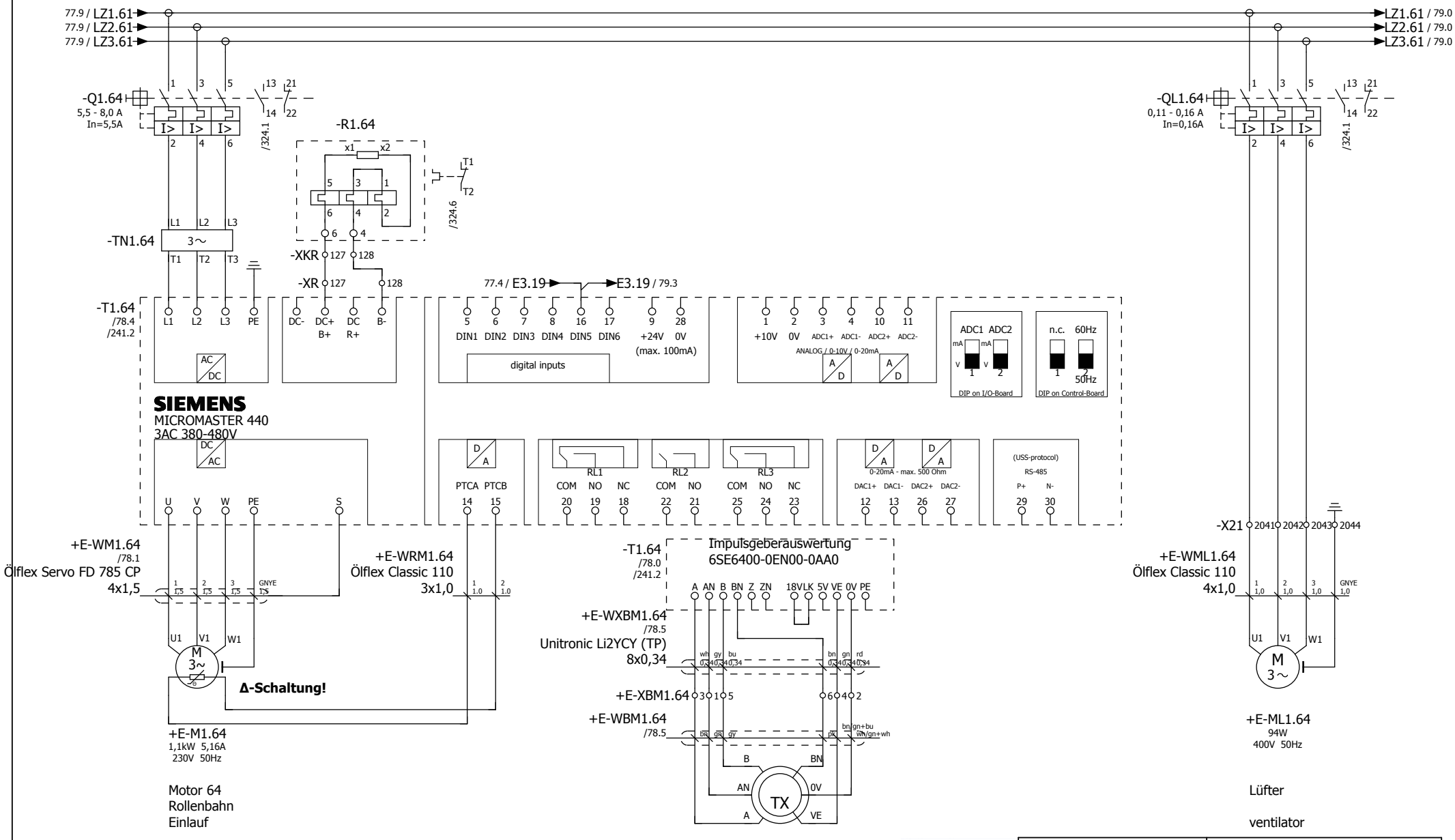

77

79

Management codes				Document identification				
5.3.0.0	CE	000	DW	QTPC	L04	ROSL	D	0049
System	Phase	Area	Typology	Project	Lot	Company	D/S	Number

						Date	30.01.2012	
						Dus		
Rev.	Date	Description	Prepared	Checked	Approved			

Duferco (SBM 2) Schaltschrank

in place of | Replaced by

RÖSLER finding a better way ...

load circuit
roll conveyor inlet M64

= ES
+ S

01-130070 00

Page 78
from 565

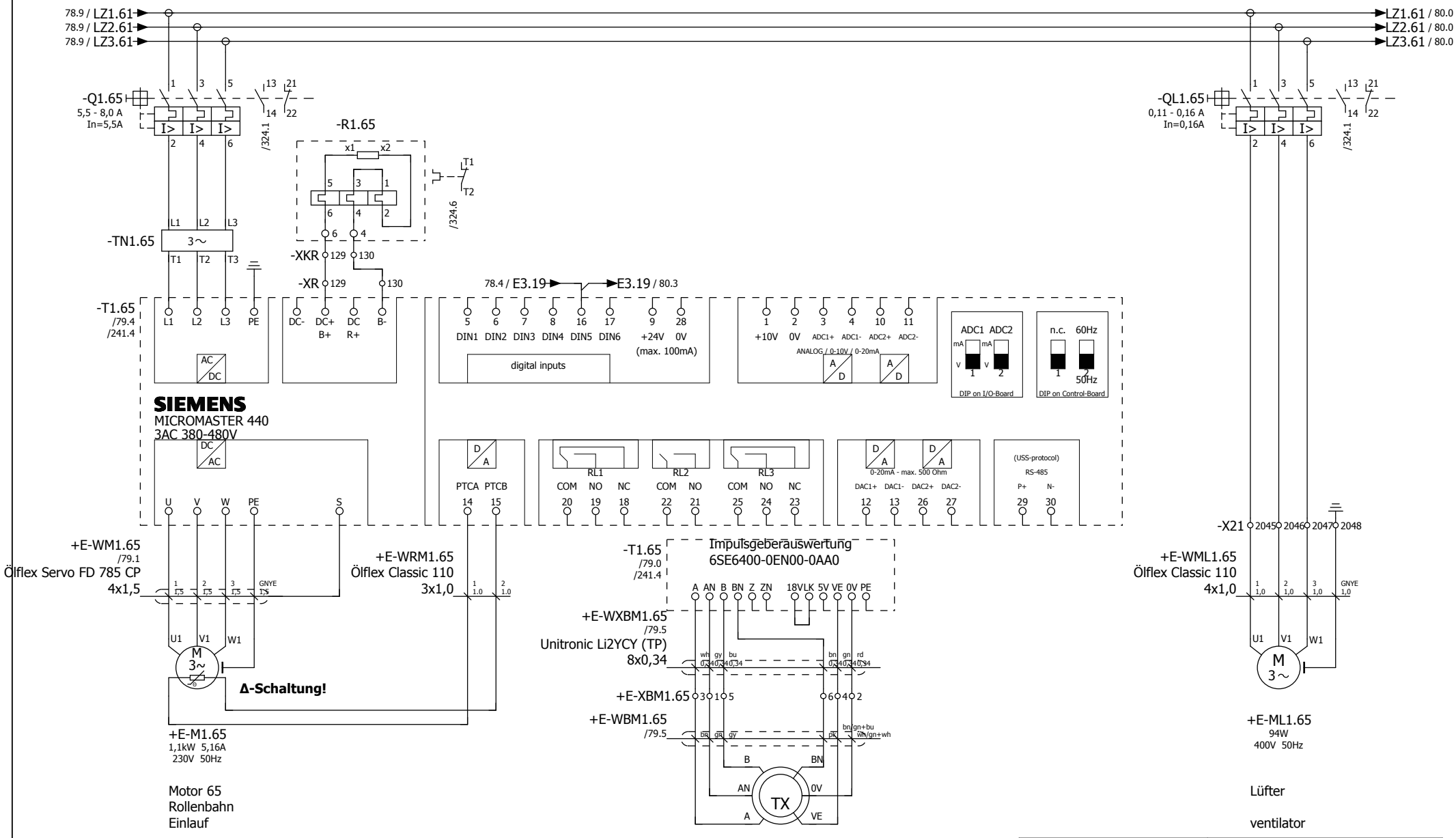

Management codes				Document identification				
5.3.0.0	CE	000	DW	QTPC	L04	ROSL	D	0049
System	Phase	Area	Typology	Project	Lot	Company	D/S	Number

Duferco Clabecq

78 80

						Date	30.01.2012	
						Dus		
Rev.	Date	Description	Prepared	Checked	Approved			

Duferco (SBM 2) Schaltschrank

in place of | Replaced by

RÖSLER finding a better way ...

load circuit
roll conveyor inlet M65

= ES
+ S

01-130070 00

Page 79
from 565

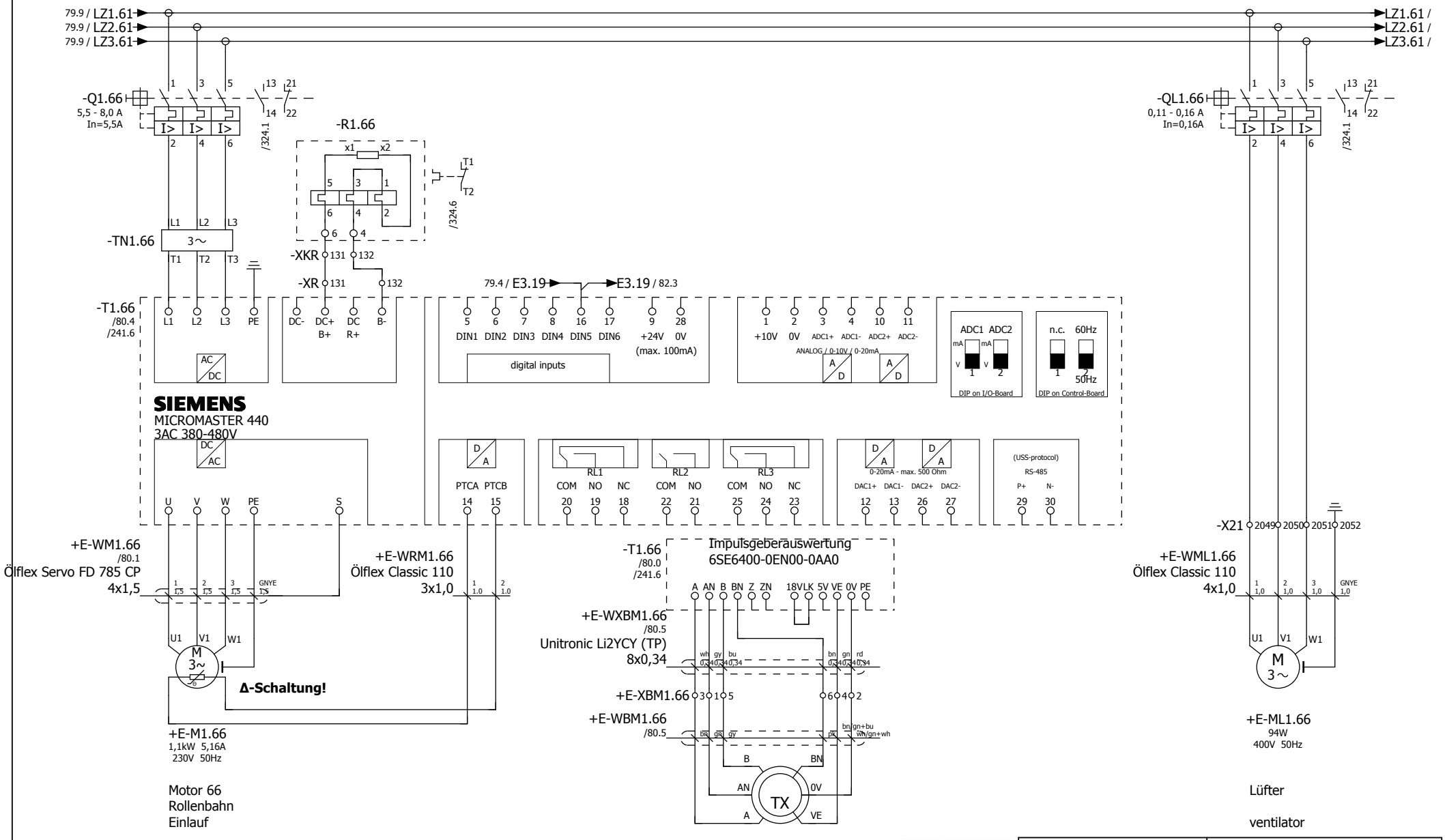

79

81

Management codes				Document identification				
5.3.0.0	CE	000	DW	QTPC	L04	ROSL	D	0049
System	Phase	Area	Typology	Project	Lot	Company	D/S	Number

						Date	30.01.2012	
						Dus		
Rev.	Date	Description	Prepared	Checked	Approved			

Duferco (SBM 2) Schaltschrank

in place of | Replaced by

RÖSLER finding a better way ...

load circuit
roll conveyor inlet M66

= ES
+ S

01-130070 00

Page 80
from 565

Zuleitung
Frequenzumrichter
Einlauf M67 - M72

input lead
frequency converter
inlet M67 - M72

80

Duferco Clabecq

Management codes				Document identification				
5.3.0.0	CE	000	DW	QTPC	L04	ROSL	D	0049
System	Phase	Area	Typology	Project	Lot	Company	D/S	Number

82

Rev.	Date	Description	Prepared	Checked	Approved			
						Date	30.01.2012	
						Dus		

Duferco (SBM 2) Schaltschrank

in place of | Replaced by

RÖSLER finding a better way ...

load circuit
input lead FU M67 - M72

= ES
+ S

01-130070 00

Page 81
from 565

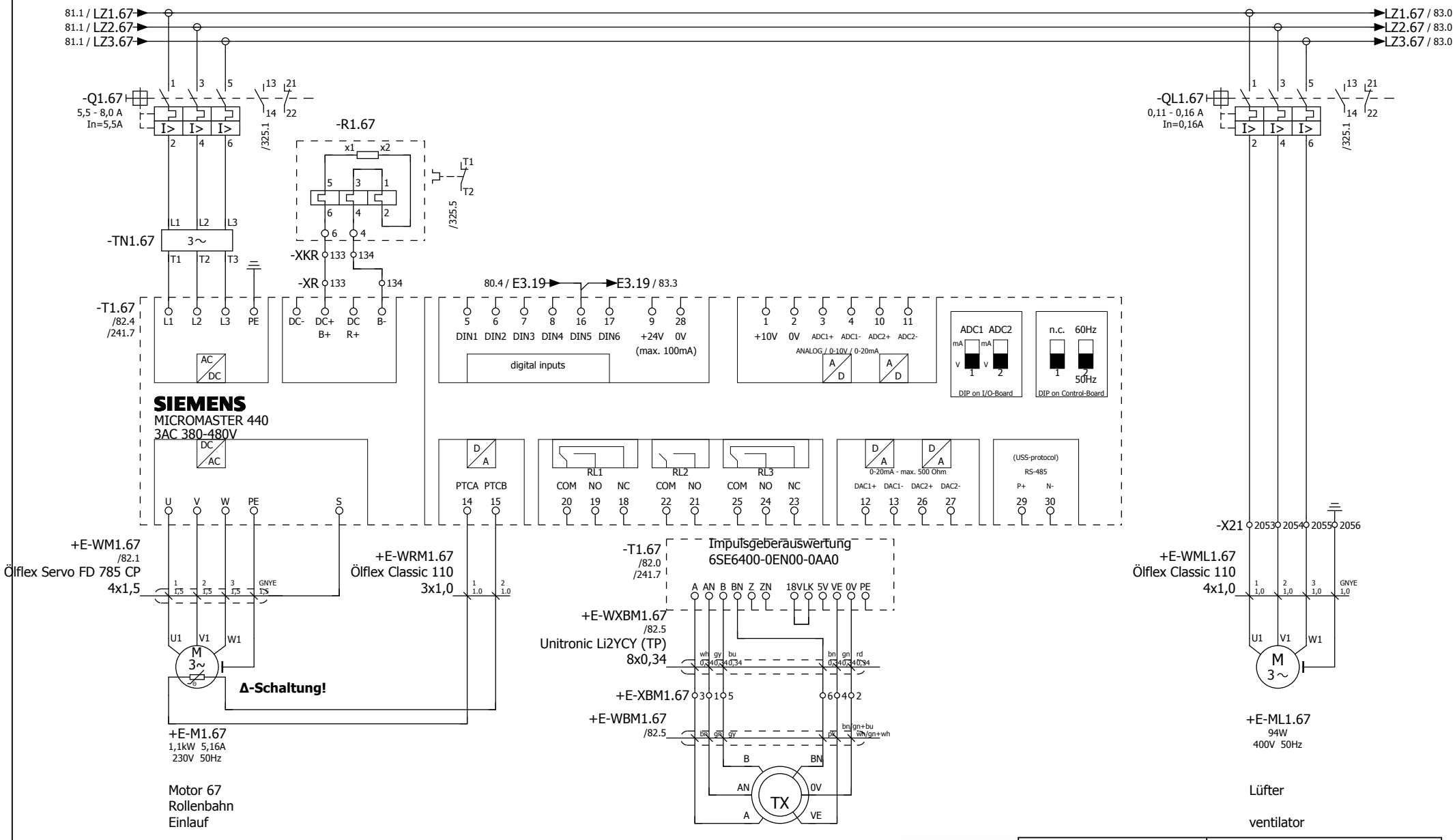

81

83

Management codes				Document identification				
5.3.0.0	CE	000	DW	QTPC	L04	ROSL	D	0049
System	Phase	Area	Typology	Project	Lot	Company	D/S	Number

Duferco Clabecq

						Date	30.01.2012	
						Dus		
Rev.	Date	Description	Prepared	Checked	Approved			

Duferco (SBM 2) Schaltschrank

in place of | Replaced by

RÖSLER finding a better way ...

load circuit
roll conveyor inlet M67

= ES
+ S

01-130070 00

Page 82
from 565

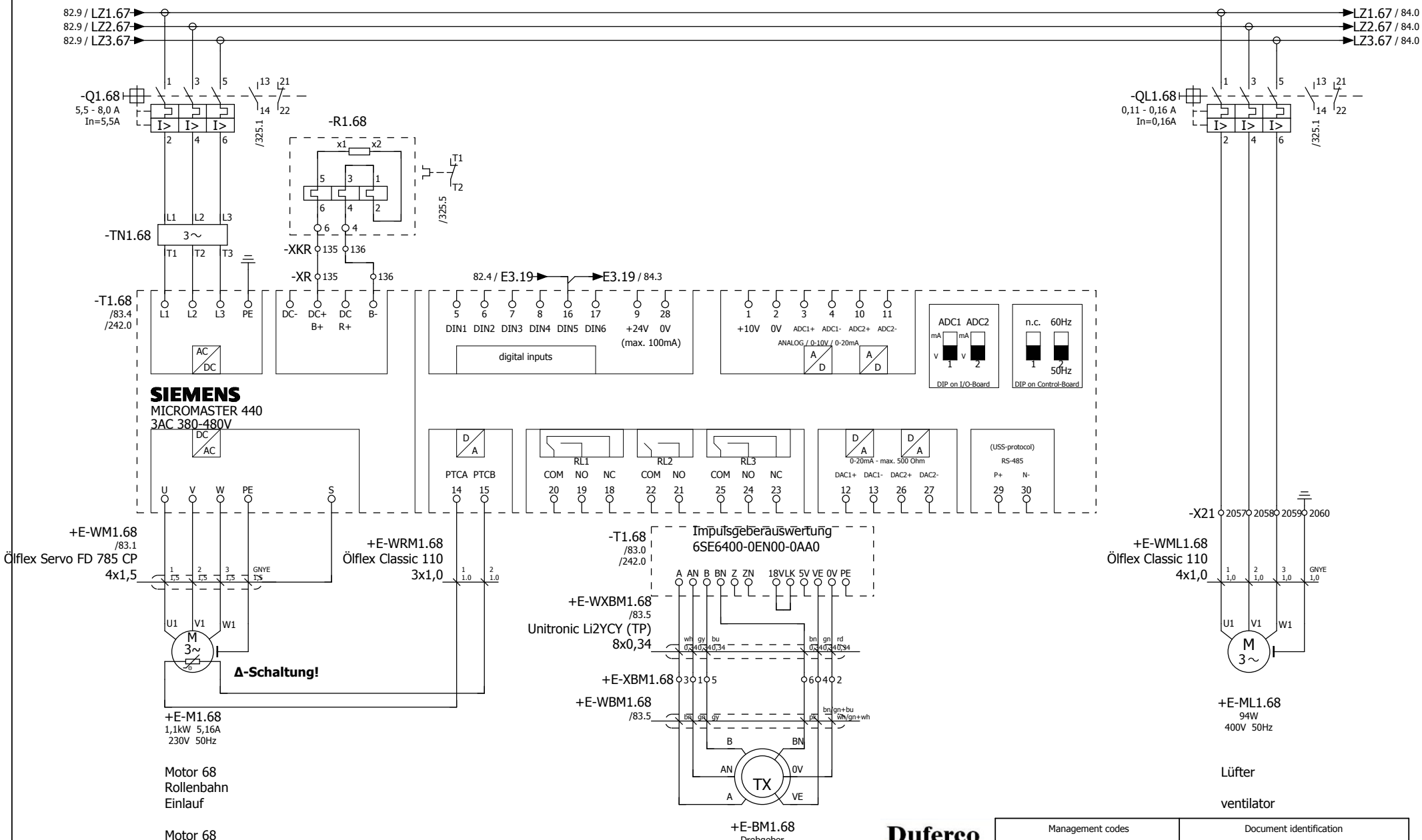

82

84

Duferco Clabecq

Management codes				Document identification				
5.3.0.0	CE	000	DW	QTPC	L04	ROSL	D	0049
System	Phase	Area	Typology	Project	Lot	Company	D/S	Number

						Date	30.01.2012	
						Dus		
Rev.	Date	Description	Prepared	Checked	Approved			

Duferco (SBM 2) Schaltschrank

in place of | Replaced by

RÖSLER finding a better way ...

load circuit
roll conveyor inlet M68

= ES
+ S

01-130070 00

Page 83
from 565

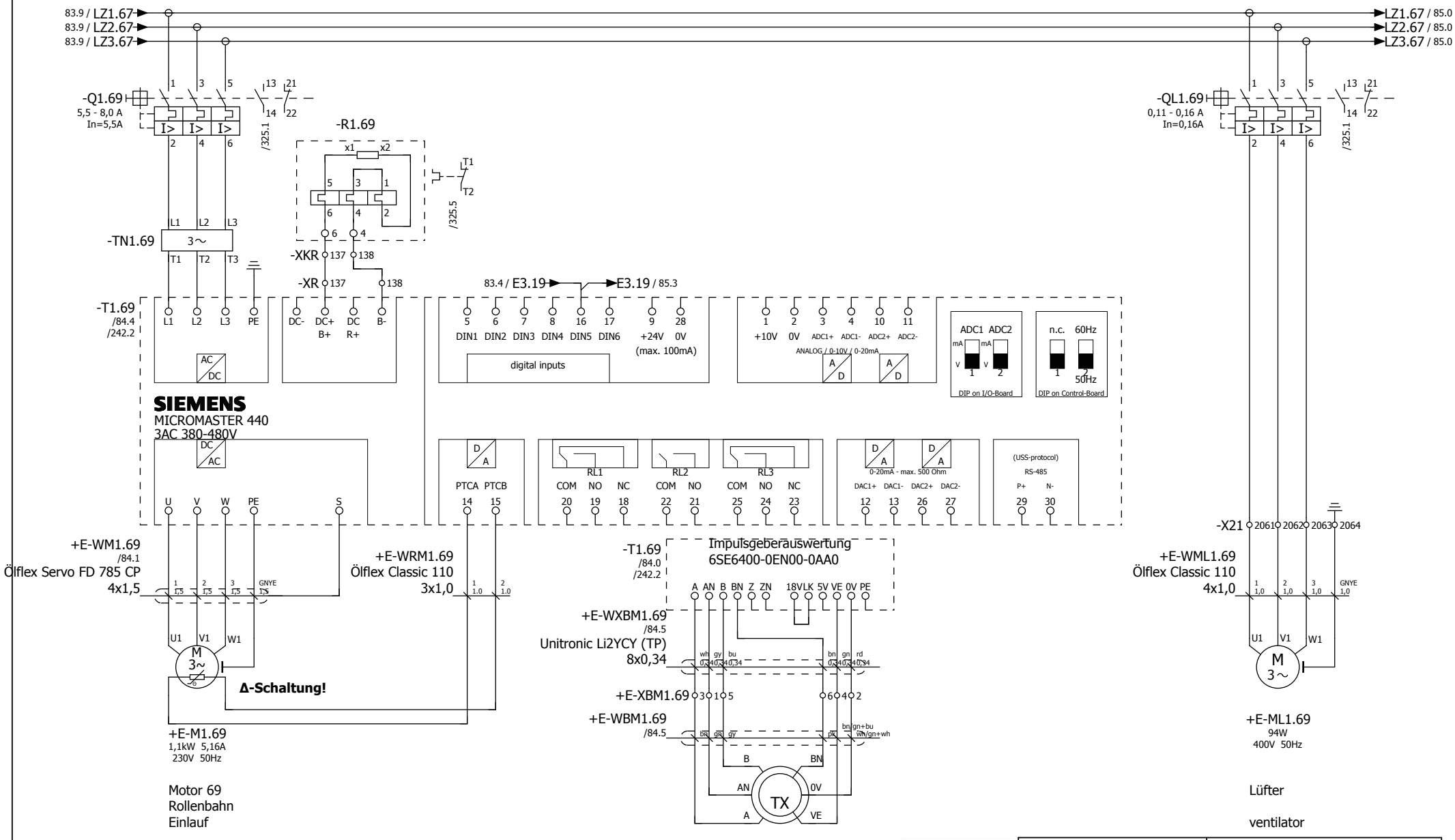

83

85

Management codes				Document identification				
5.3.0.0	CE	000	DW	QTPC	L04	ROSL	D	0049
System	Phase	Area	Typology	Project	Lot	Company	D/S	Number

						Date	30.01.2012	
						Dus		
Rev.	Date	Description	Prepared	Checked	Approved			

Duferco (SBM 2) Schaltschrank

in place of | Replaced by

RÖSLER finding a better way ...

load circuit
roll conveyor inlet M69

= ES
+ S

01-130070 00

Page 84
from 565

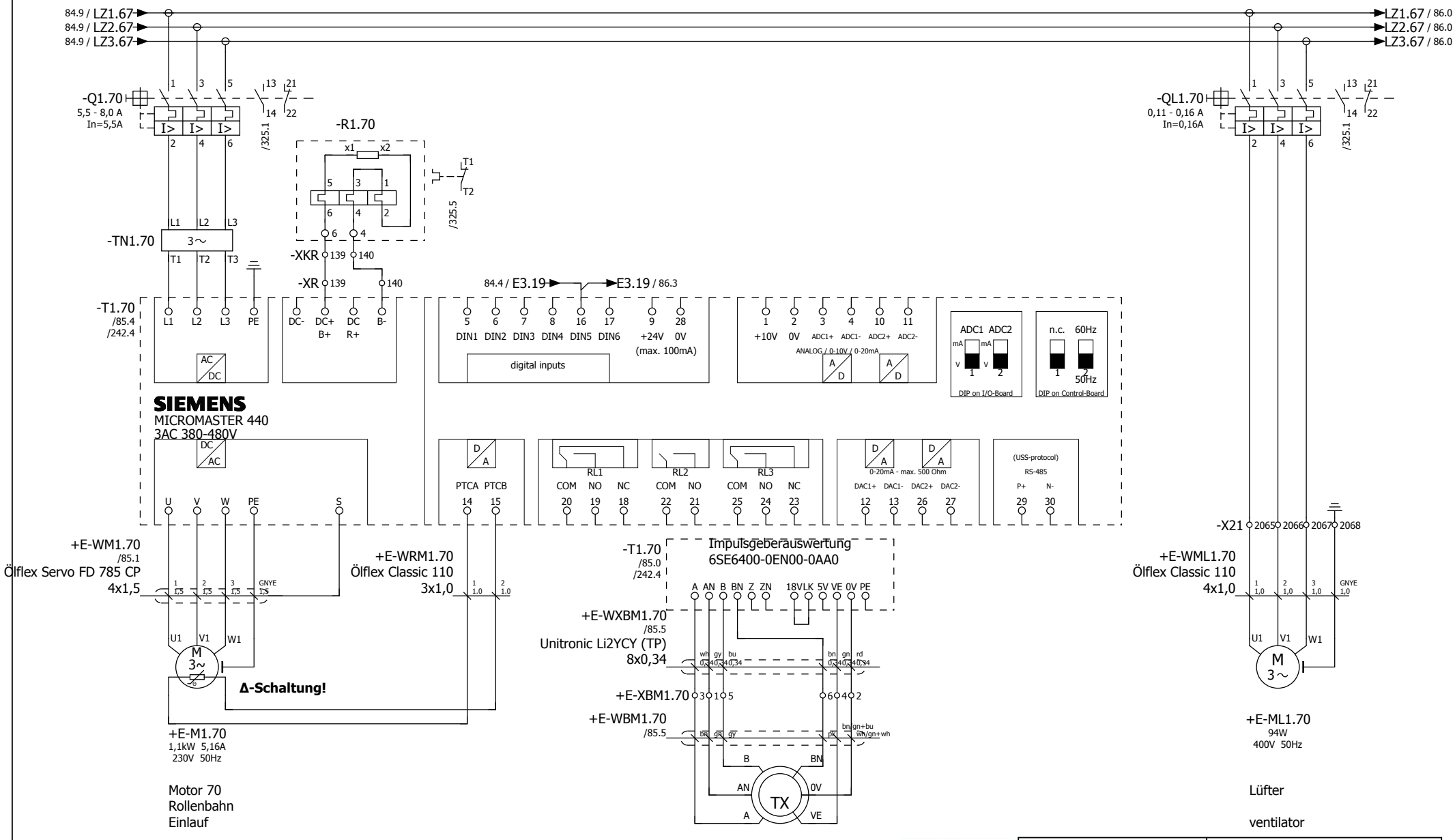

84

86

Management codes				Document identification				
5.3.0.0	CE	000	DW	QTPC	L04	ROSL	D	0049
System	Phase	Area	Typology	Project	Lot	Company	D/S	Number

						Date	30.01.2012	
						Dus		
Rev.	Date	Description	Prepared	Checked	Approved			

Duferco (SBM 2) Schaltschrank

in place of | Replaced by

RÖSLER finding a better way ...

load circuit
roll conveyor inlet M70

= ES
+ S

01-130070 00

Page 85
from 565

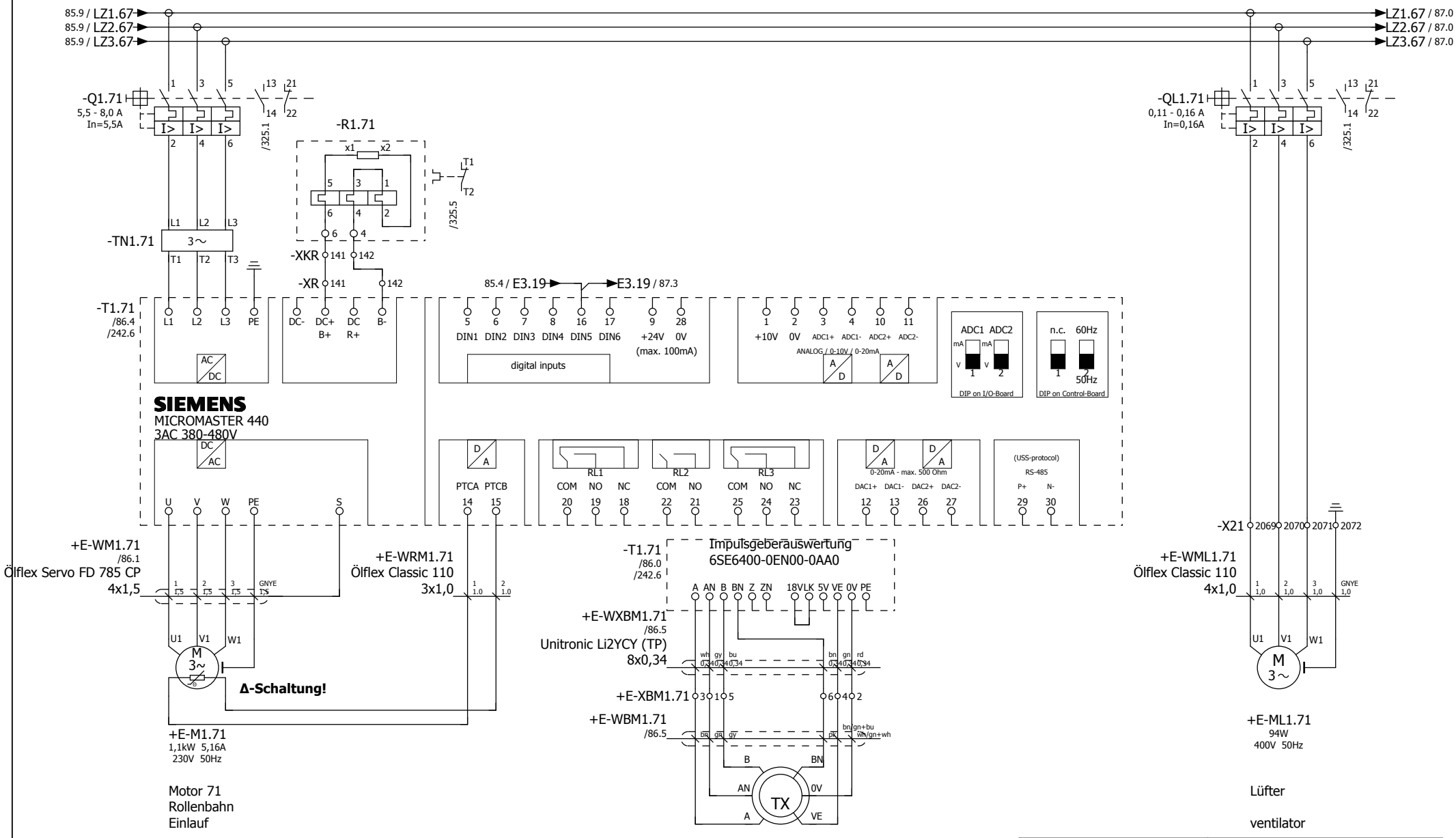

Duferco Clabecq

Management codes				Document identification				
5.3.0.0	CE	000	DW	QTPC	L04	ROSL	D	0049
System	Phase	Area	Typology	Project	Lot	Company	D/S	Number

85 87

Rev.	Date	Description	Prepared	Checked	Approved	Date 30.01.2012	Duferco (SBM 2) Schaltschrank	RÖSLER finding a better way ...	load circuit roll conveyor inlet M71	= ES	01-130070 00	Page 86
						Dus				+ S		from 565
							in place of	Replaced by				

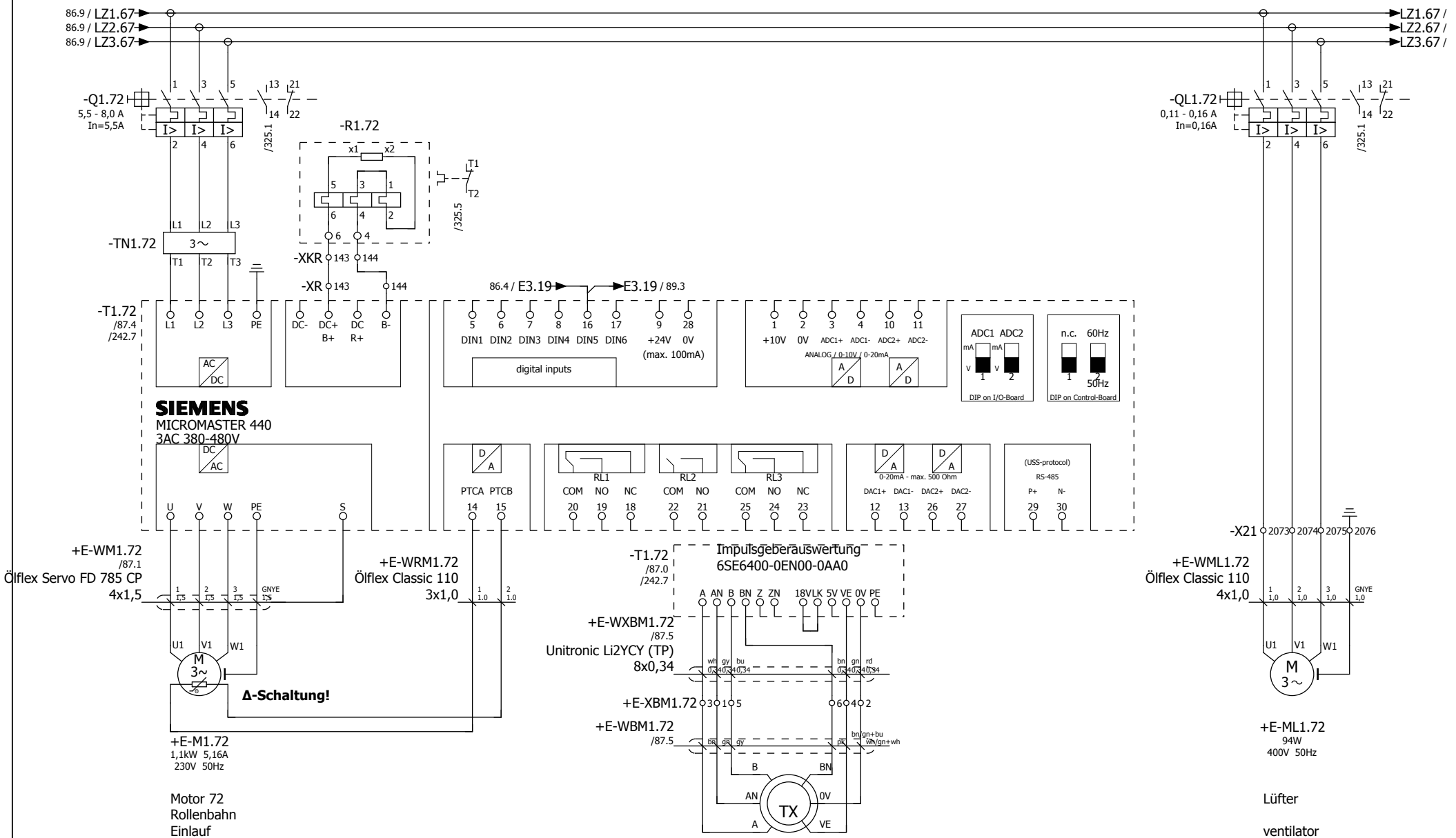

86

88

Management codes				Document identification				
5.3.0.0	CE	000	DW	QTPC	L04	ROSL	D	0049
System	Phase	Area	Typology	Project	Lot	Company	D/S	Number

Duferco Clabecq

Rev.	Date	Description	Prepared	Checked	Approved			
						Date	30.01.2012	
						Dus		

Duferco (SBM 2) Schaltschrank

in place of | Replaced by

RÖSLER finding a better way ...

load circuit
roll conveyor inlet M72

= ES
+ S

01-130070 00

Page 87
from 565

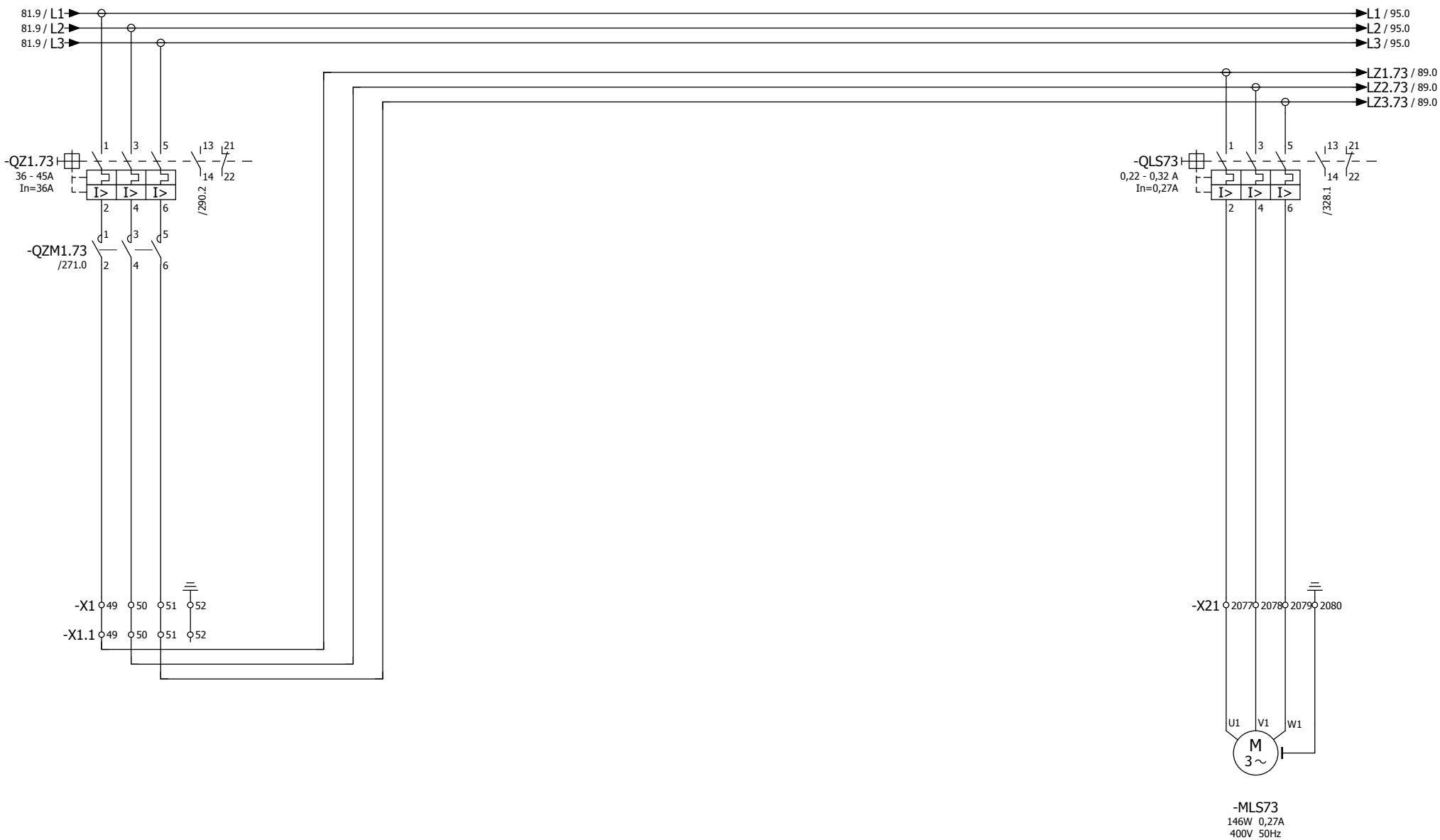

Zuleitung
Frequenzumrichter
Einlauf M73 - M78

input lead
frequency converter
inlet M73 - M78

Lüfter
Schaltschrank
ventilator
Enclosure

Duferco Clabecq

Management codes				Document identification				
5.3.0.0	CE	000	DW	QTPC	L04	ROSL	D	0049
System	Phase	Area	Typology	Project	Lot	Company	D/S	Number

87 89

Rev.	Date	Description	Prepared	Checked	Approved		
						Date	30.01.2012
						Dus	

Duferco (SBM 2) Schaltschrank
in place of | Replaced by

RÖSLER finding a better way ...

load circuit
input lead FU M73 - M78

= ES
+ S

01-130070 00

Page 88
from 565

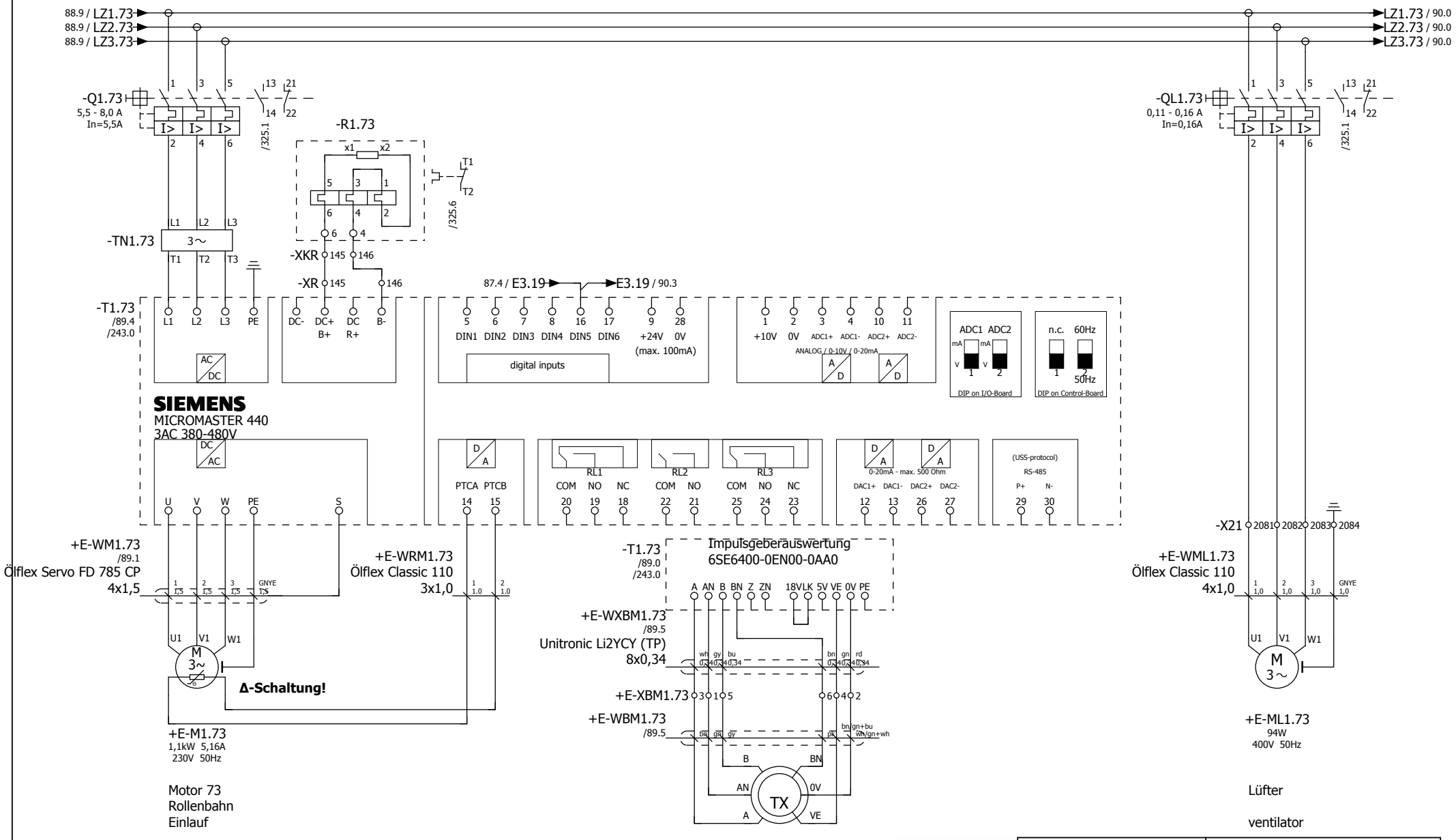

Duferco Clabecq

Management codes				Document identification				
5.3.0.0	CE	000	DW	QTPC	L04	ROSL	D	0049
System	Phase	Area	Typology	Project	Lot	Company	D/S	Number

88 90

Rev.	Date	Description	Prepared	Checked	Approved	Date 30.01.2012	Duferco (SBM 2) Schaltschrank	RÖSLER finding a better way ...	load circuit roll conveyor inlet M73	= ES	01-130070 00	Page 89
						Dus				+ S		from 565
							in place of	Replaced by				

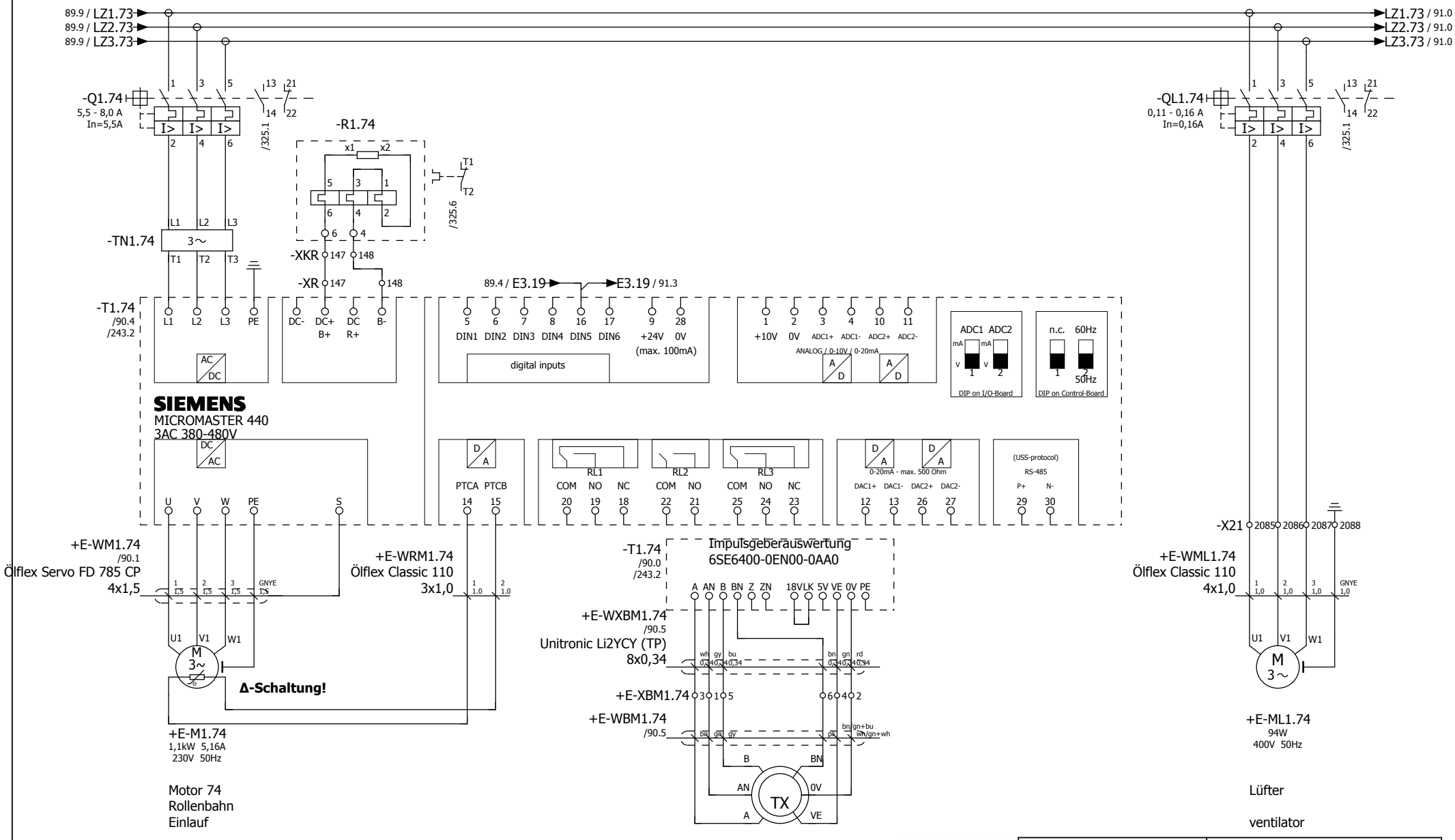

89

91

Duferco Clabecq

Management codes				Document identification				
5.3.0.0	CE	000	DW	QTPC	L04	ROSL	D	0049
System	Phase	Area	Typology	Project	Lot	Company	D/S	Number

						Date	30.01.2012	
						Dus		
Rev.	Date	Description	Prepared	Checked	Approved			

Duferco (SBM 2) Schaltschrank

in place of | Replaced by

RÖSLER finding a better way ...

load circuit
roll conveyor inlet M74

= ES
+ S

01-130070 00

Page 90
from 565

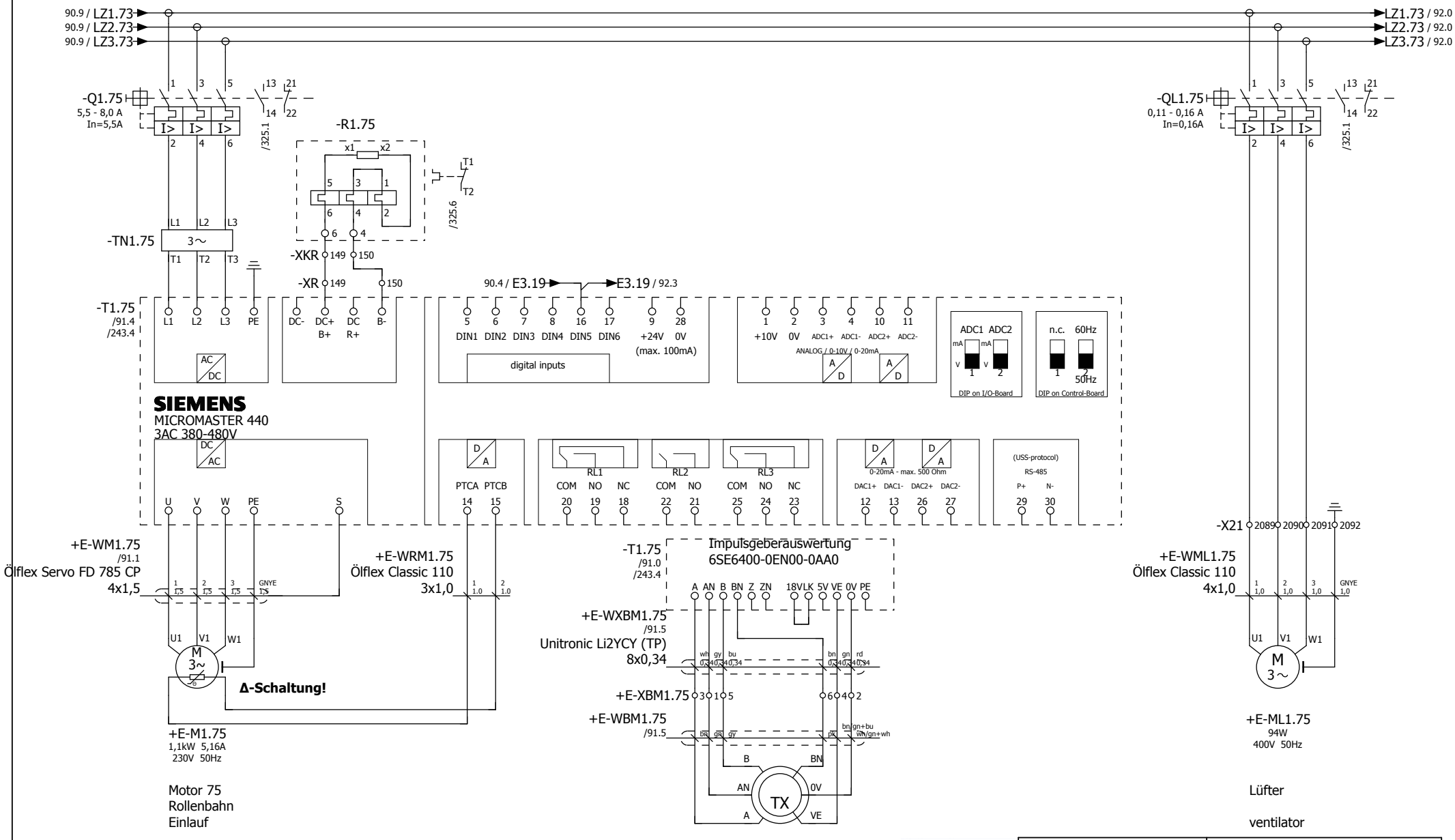

Management codes				Document identification				
5.3.0.0	CE	000	DW	QTPC	L04	ROSL	D	0049
System	Phase	Area	Typology	Project	Lot	Company	D/S	Number

Duferco Clabecq

90 92

Rev.	Date	Description	Prepared	Checked	Approved			
						Date	30.01.2012	
						Dus		

Duferco (SBM 2) Schaltschrank

in place of | Replaced by

RÖSLER finding a better way ...

load circuit
roll conveyor inlet M75

= ES
+ S

01-130070 00

Page 91
from 565

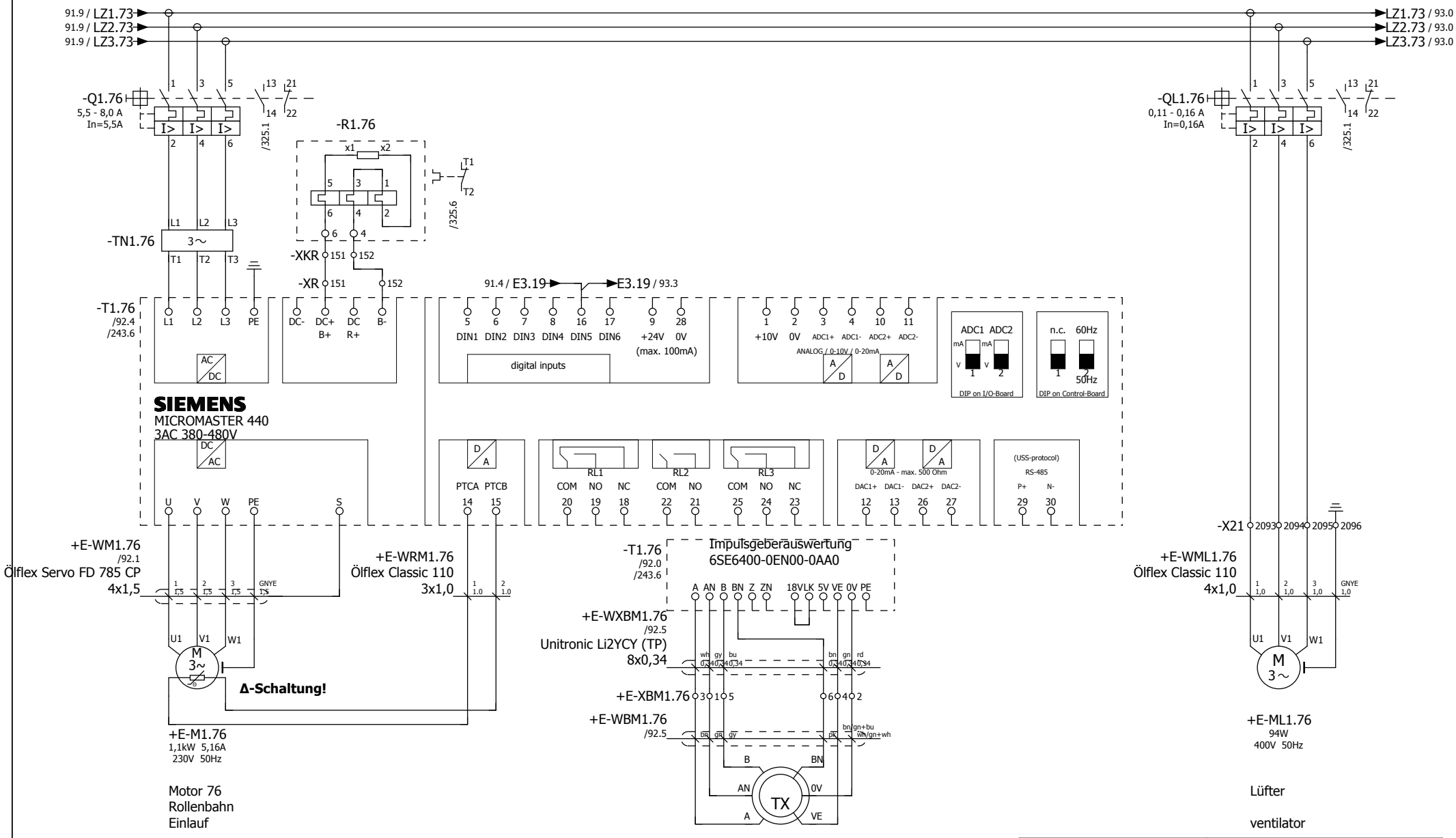

91

93

Management codes				Document identification				
5.3.0.0	CE	000	DW	QTPC	L04	ROSL	D	0049
System	Phase	Area	Typology	Project	Lot	Company	D/S	Number

Duferco Clabecq

						Date	30.01.2012	
						Dus		
Rev.	Date	Description	Prepared	Checked	Approved			

Duferco (SBM 2) Schaltschrank

in place of | Replaced by

RÖSLER finding a better way ...

load circuit
roll conveyor inlet M76

= ES
+ S

01-130070 00

Page 92
from 565

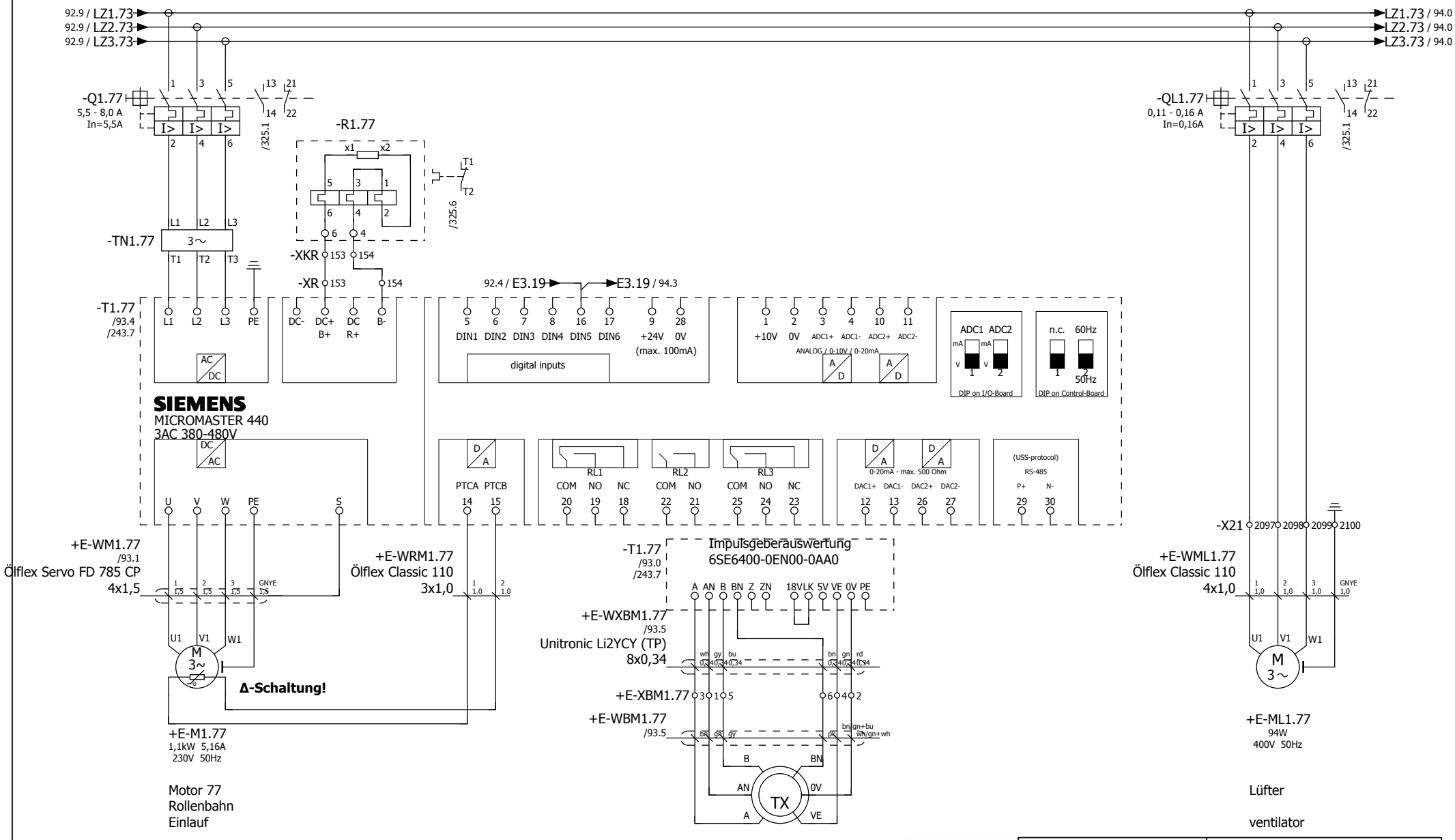

92

94

Duferco Clabecq

Management codes				Document identification				
5.3.0.0	CE	000	DW	QTPC	L04	ROSL	D	0049
System	Phase	Area	Typology	Project	Lot	Company	D/S	Number

						Date	30.01.2012	
						Dus		
Rev.	Date	Description	Prepared	Checked	Approved			

Duferco (SBM 2) Schaltschrank

in place of | Replaced by

RÖSLER finding a better way ...

load circuit
roll conveyor inlet M77

= ES
+ S

01-130070 00

Page 93
from 565

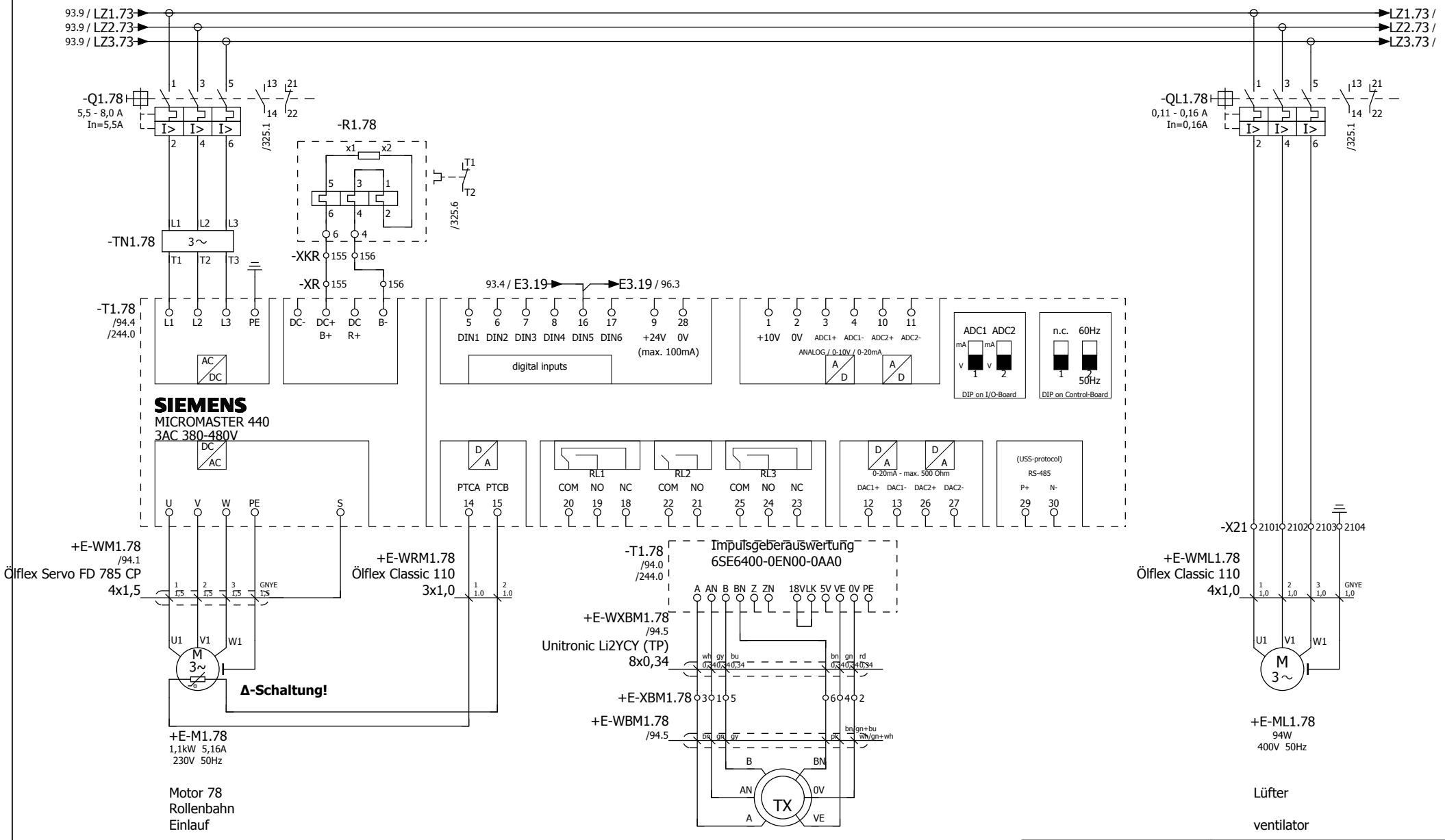

93

95

Duferco Clabecq

Management codes				Document identification				
5.3.0.0	CE	000	DW	QTPC	L04	ROSL	D	0049
System	Phase	Area	Typology	Project	Lot	Company	D/S	Number

						Date	30.01.2012	
						Dus		
Rev.	Date	Description	Prepared	Checked	Approved			

Duferco (SBM 2) Schaltschrank

in place of | Replaced by

RÖSLER finding a better way ...

load circuit
roll conveyor inlet M78

= ES
+ S

01-130070 00

Page 94
from 565

Zuleitung
Frequenzumrichter
Einlauf M79 - M84

input lead
frequency converter
inlet M79 - M84

Duferco Clabecq

Management codes				Document identification				
5.3.0.0	CE	000	DW	QTPC	L04	ROSL	D	0049
System	Phase	Area	Typology	Project	Lot	Company	D/S	Number

94 96

Rev.	Date	Description	Prepared	Checked	Approved		
						Date	30.01.2012
						Dus	

Duferco (SBM 2) Schaltschrank
in place of | Replaced by

RÖSLER finding a better way ...

load circuit
input lead FU M79 - M84

= ES
+ S

01-130070 00

Page 95
from 565

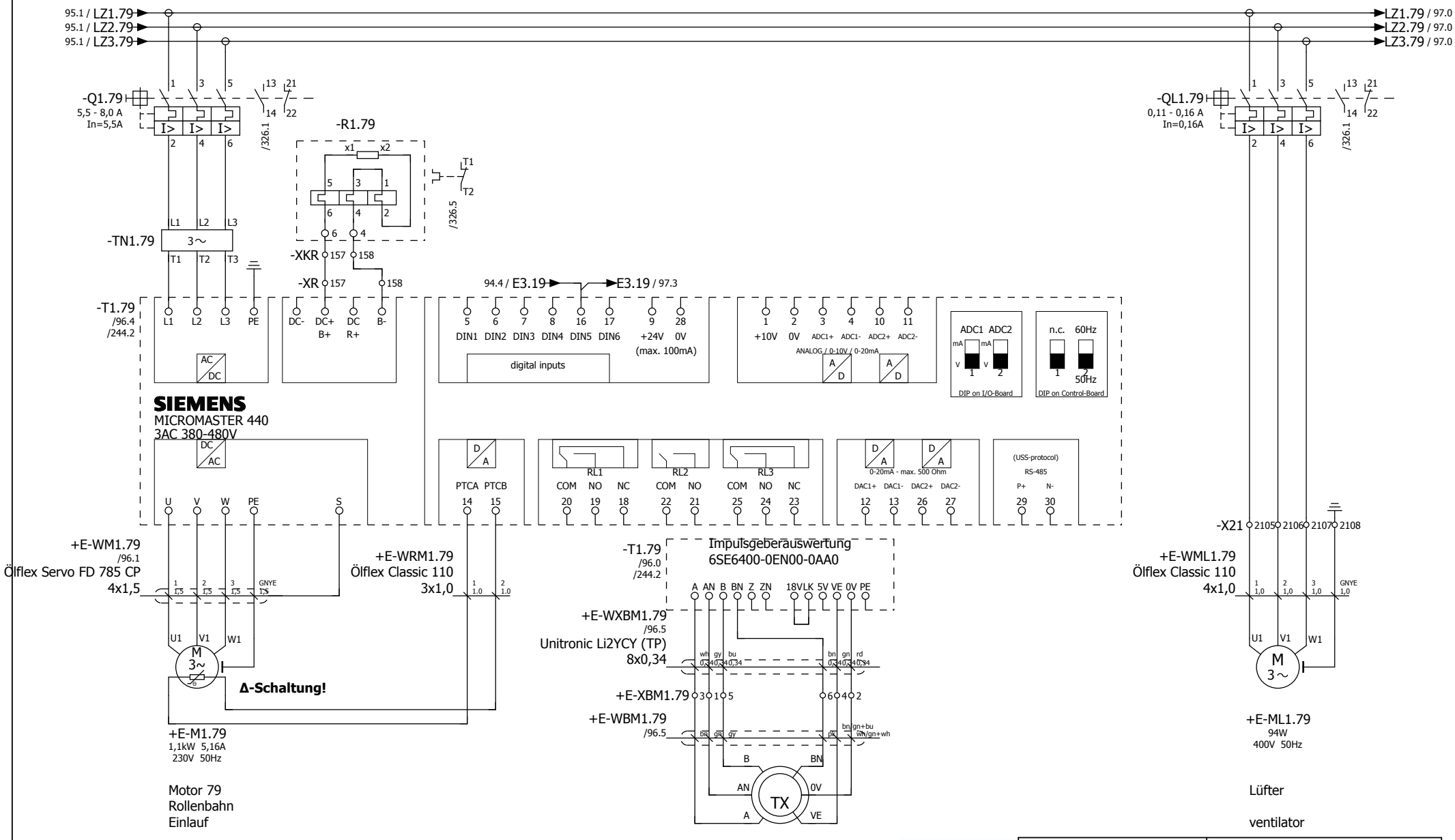

95

97

Duferco Clabecq

Management codes				Document identification				
5.3.0.0	CE	000	DW	QTPC	L04	ROSL	D	0049
System	Phase	Area	Typology	Project	Lot	Company	D/S	Number

						Date	30.01.2012	
						Dus		
Rev.	Date	Description	Prepared	Checked	Approved			

Duferco (SBM 2) Schaltschrank

in place of | Replaced by

RÖSLER finding a better way ...

load circuit
roll conveyor inlet M79

= ES
+ S

01-130070 00

Page 96
from 565

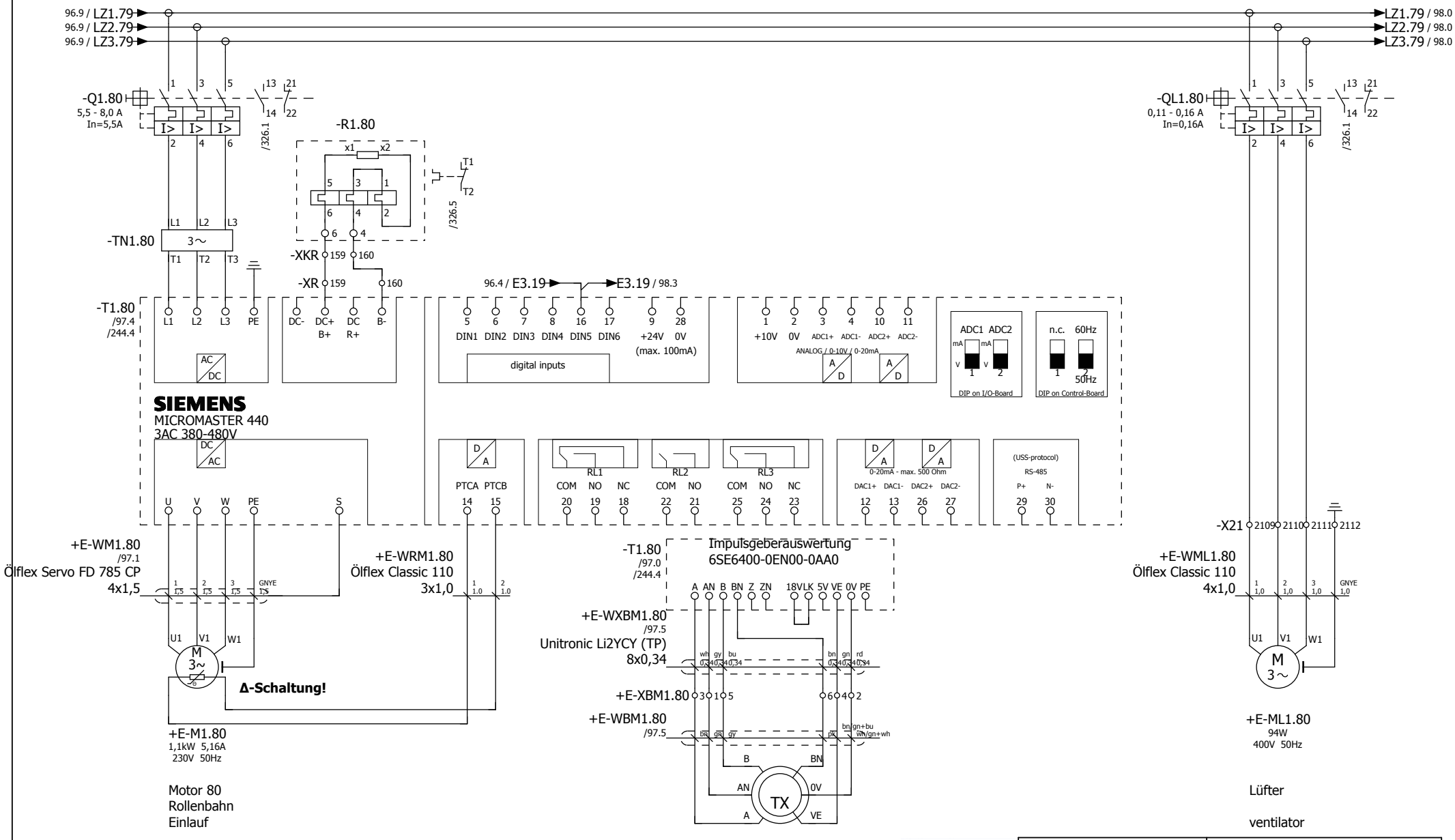

96

Duferco Clabecq

Management codes				Document identification				
5.3.0.0	CE	000	DW	QTPC	L04	ROSL	D	0049
System	Phase	Area	Typology	Project	Lot	Company	D/S	Number

98

						Date	30.01.2012	
						Dus		
Rev.	Date	Description	Prepared	Checked	Approved			

Duferco (SBM 2) Schaltschrank

in place of | Replaced by

RÖSLER finding a better way ...

load circuit
roll conveyor inlet M80

= ES
+ S

01-130070 00

Page 97
from 565

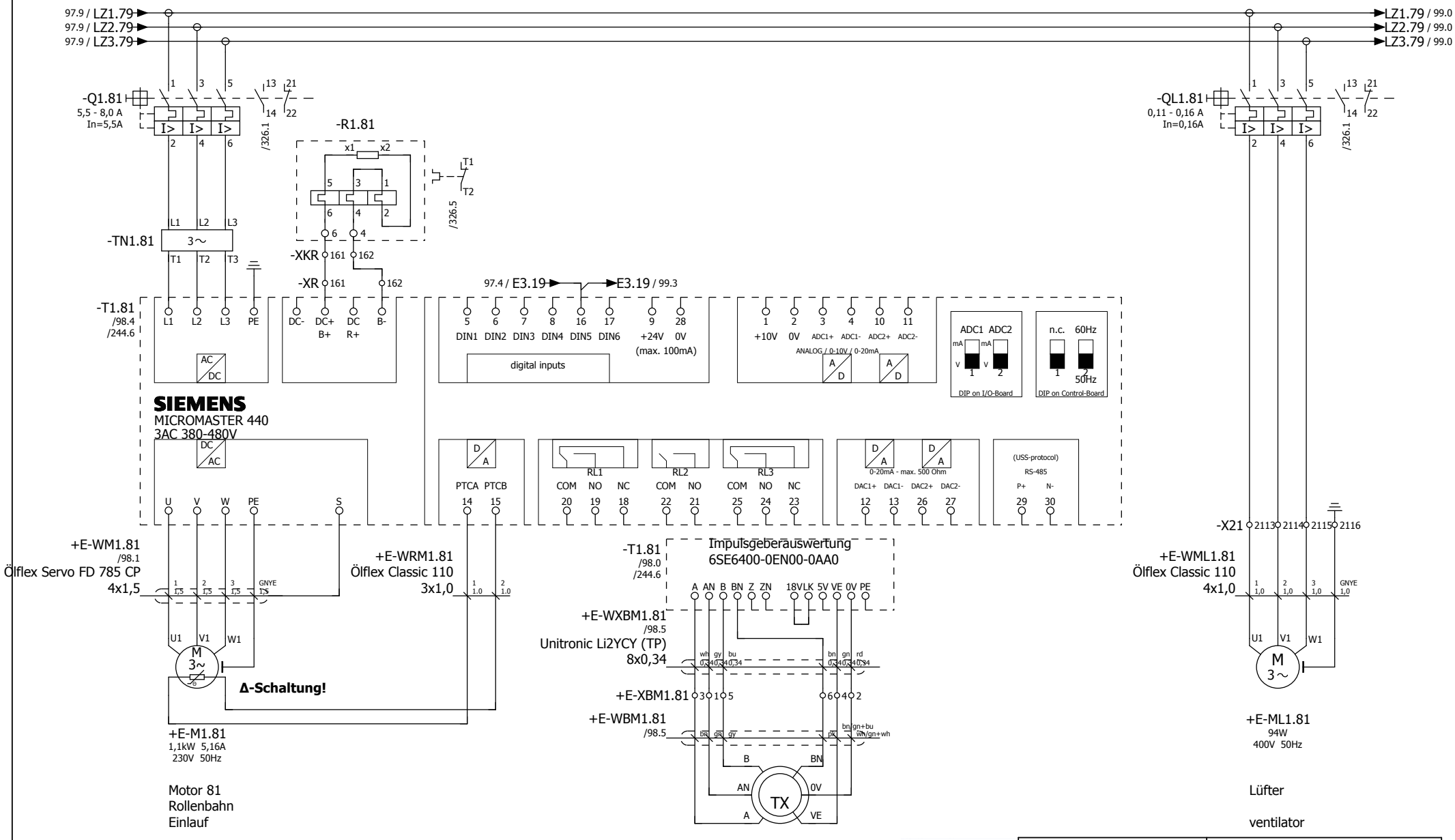

97

99

Duferco Clabecq

Management codes				Document identification				
5.3.0.0	CE	000	DW	QTPC	L04	ROSL	D	0049
System	Phase	Area	Typology	Project	Lot	Company	D/S	Number

						Date	30.01.2012	
						Dus		
Rev.	Date	Description	Prepared	Checked	Approved			

Duferco (SBM 2) Schaltschrank

in place of | Replaced by

RÖSLER finding a better way ...

load circuit
roll conveyor inlet M81

= ES
+ S

01-130070 00

Page 98
from 565

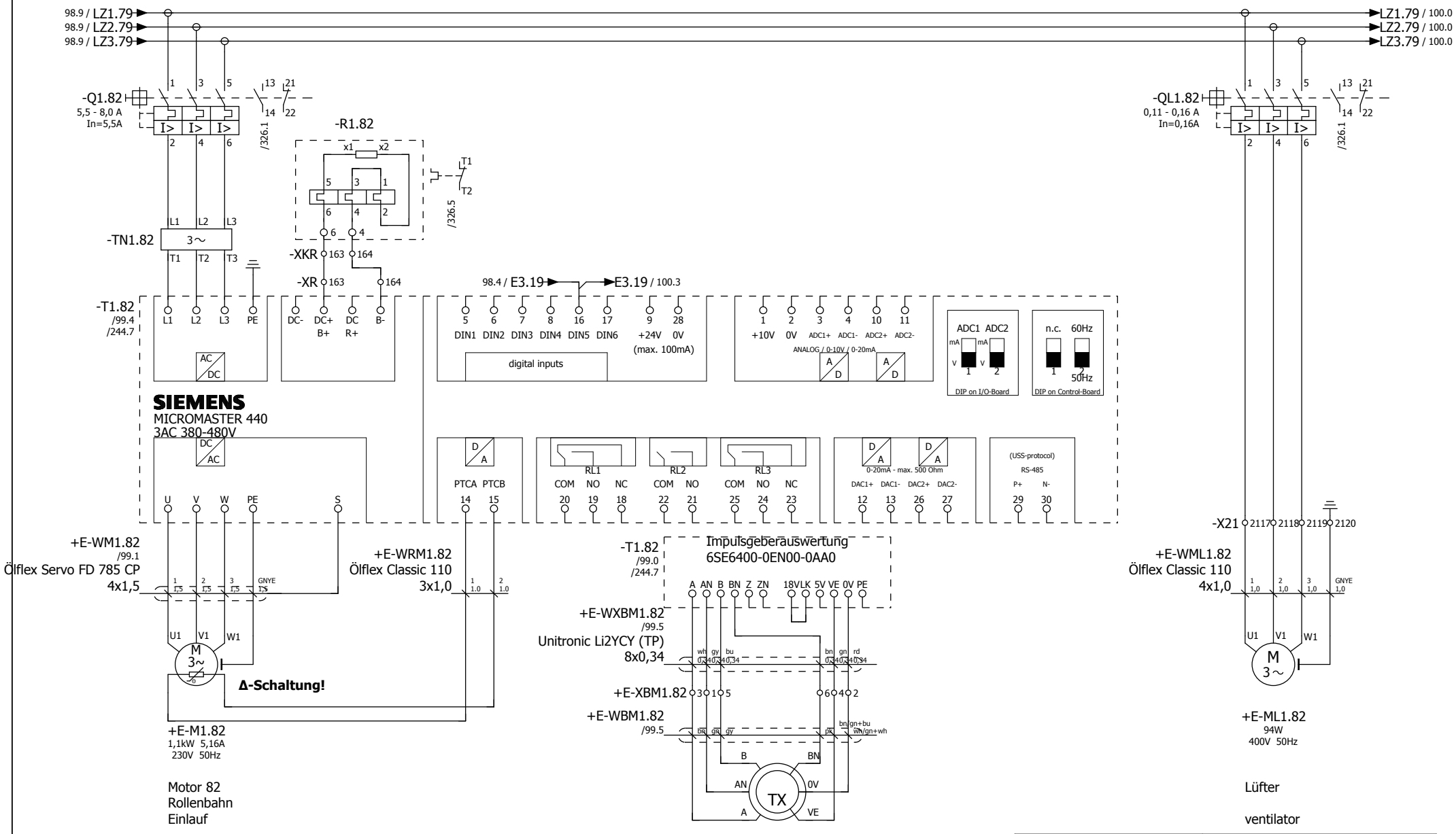

98

100

Management codes				Document identification				
5.3.0.0	CE	000	DW	QTPC	L04	ROSL	D	0049
System	Phase	Area	Typology	Project	Lot	Company	D/S	Number

Duferco Clabecq

Rev.	Date	Description	Prepared	Checked	Approved			
						Date	30.01.2012	
						Dus		

Duferco (SBM 2) Schaltschrank

in place of | Replaced by

RÖSLER finding a better way ...

load circuit
roll conveyor inlet M82

= ES
+ S

01-130070 00

Page 99
from 565

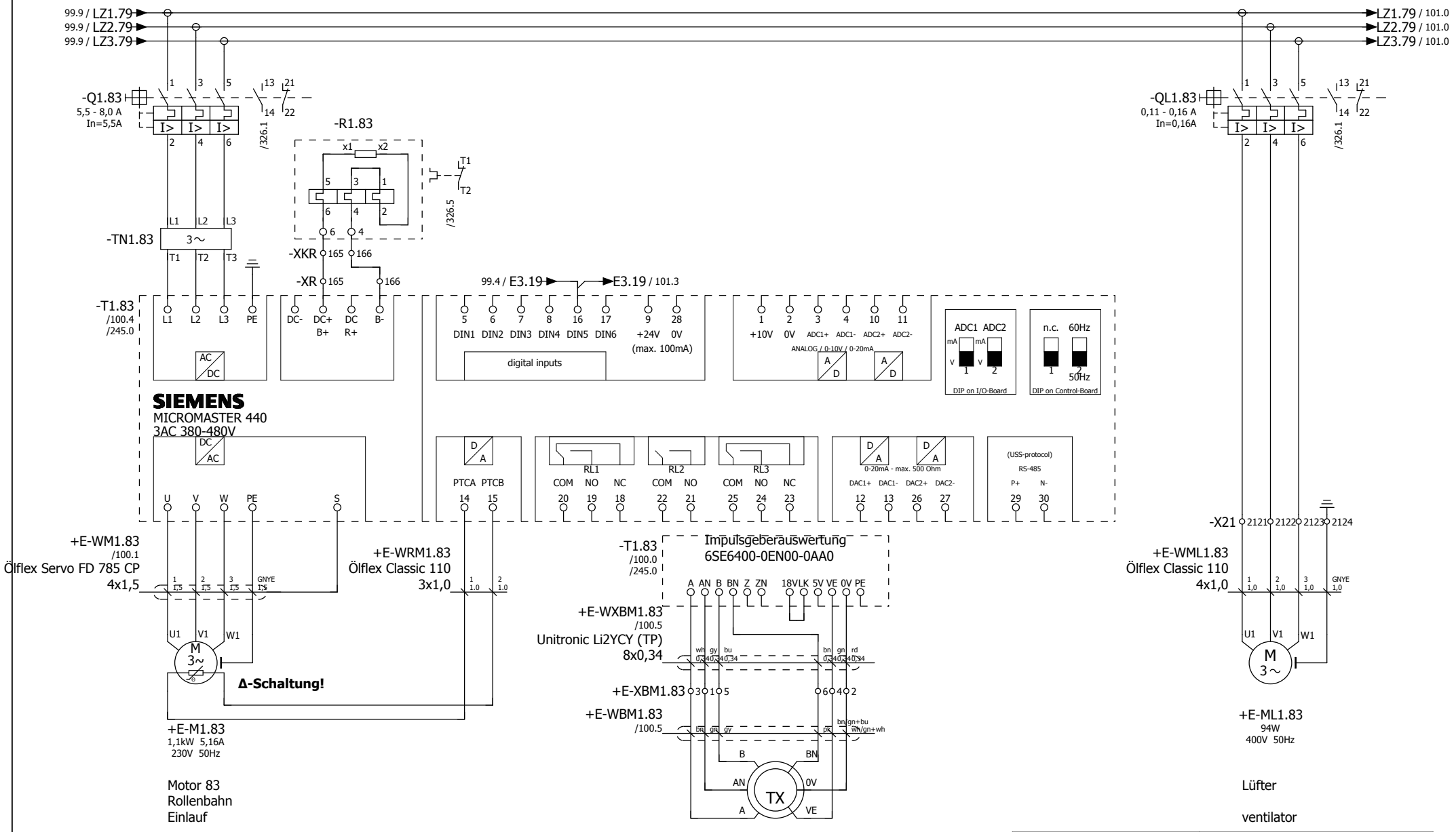

Management codes				Document identification				
5.3.0.0	CE	000	DW	QTPC	L04	ROSL	D	0049
System	Phase	Area	Typology	Project	Lot	Company	D/S	Number

Duferco Clabecq

99

101

Rev.	Date	Description	Prepared	Checked	Approved			
						Date	30.01.2012	
						Dus		

Duferco (SBM 2) Schaltschrank

in place of | Replaced by

RÖSLER finding a better way ...

load circuit
roll conveyor inlet M83

= ES
+ S

01-130070 00

Page 100
from 565

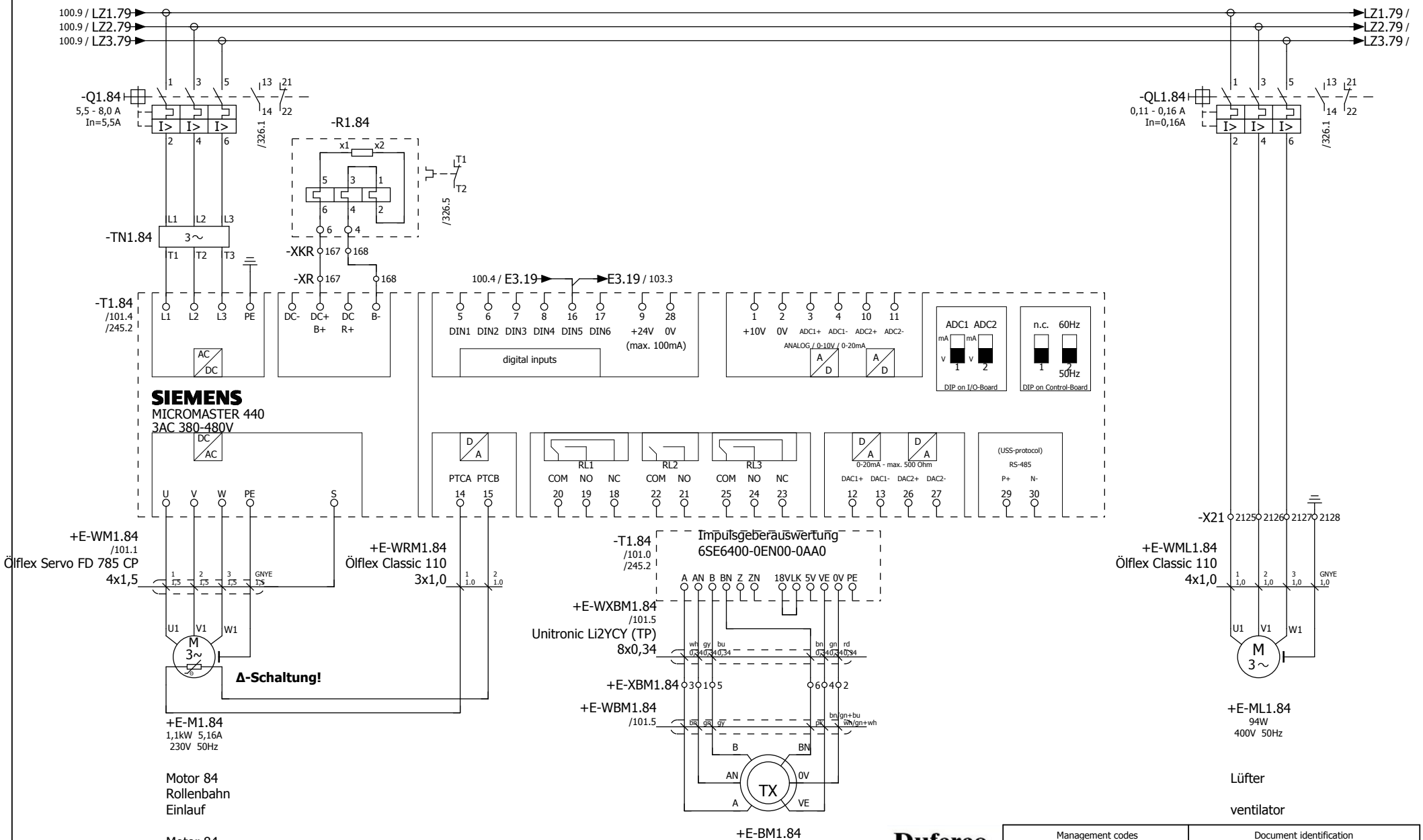

100

102

Duferco Clabecq

Management codes				Document identification				
5.3.0.0	CE	000	DW	QTPC	L04	ROSL	D	0049
System	Phase	Area	Typology	Project	Lot	Company	D/S	Number

						Date	30.01.2012	
						Dus		
Rev.	Date	Description	Prepared	Checked	Approved			

Duferco (SBM 2) Schaltschrank

in place of | Replaced by

RÖSLER finding a better way ...

load circuit
roll conveyor inlet M84

= ES
+ S

01-130070 00

Page 101
from 565

Zuleitung
Frequenzumrichter
Einlauf M85 - M90

input lead
frequency converter
inlet M85 - M90

101

Duferco Clabecq

Management codes				Document identification				
5.3.0.0	CE	000	DW	QTPC	L04	ROSL	D	0049
System	Phase	Area	Typology	Project	Lot	Company	D/S	Number

103

Rev.	Date	Description	Prepared	Checked	Approved			
						Date	30.01.2012	
						Dus		

Duferco (SBM 2) Schaltschrank

in place of | Replaced by

RÖSLER finding a better way ...

load circuit
input lead FU M85 - M90

= ES
+ S

01-130070 00

Page 102
from 565

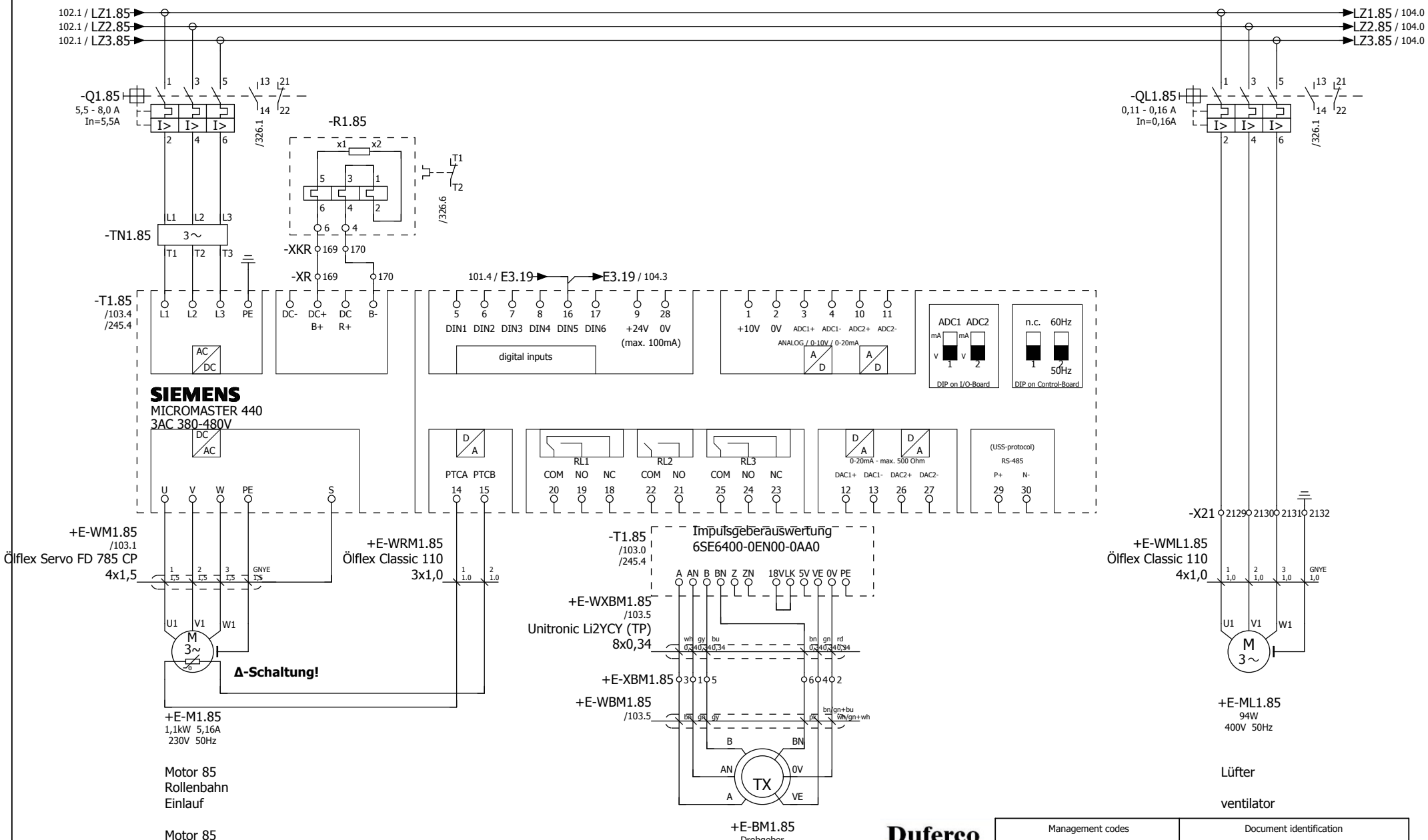

102

104

Management codes				Document identification				
5.3.0.0	CE	000	DW	QTPC	L04	ROSL	D	0049
System	Phase	Area	Typology	Project	Lot	Company	D/S	Number

Duferco Clabecq

						Date	30.01.2012	
						Dus		
Rev.	Date	Description	Prepared	Checked	Approved			

Duferco (SBM 2) Schaltschrank

in place of | Replaced by

RÖSLER finding a better way ...

load circuit
roll conveyor inlet M85

= ES
+ S

01-130070 00

Page 103
from 565

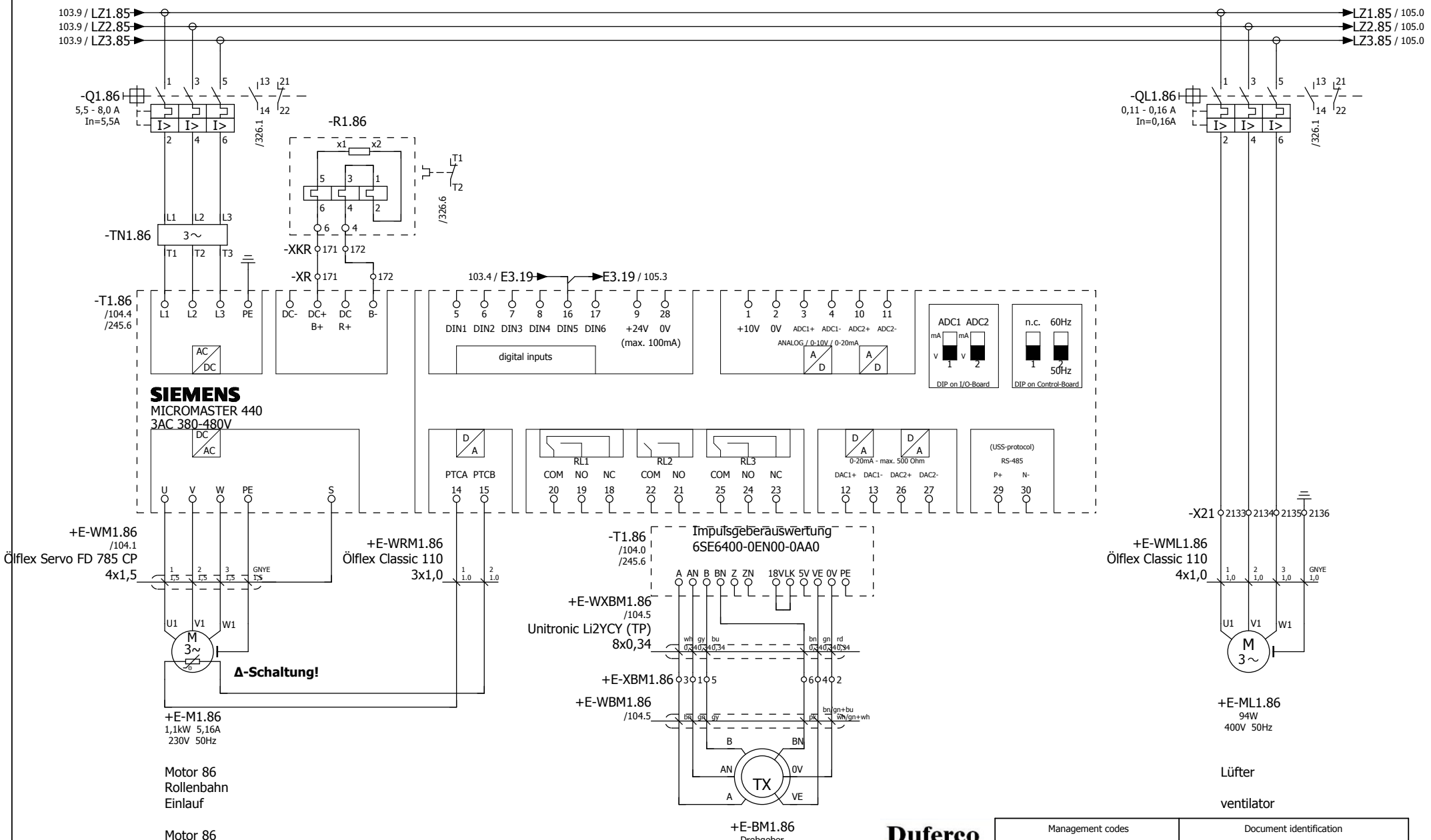

103

105

Management codes				Document identification				
5.3.0.0	CE	000	DW	QTPC	L04	ROSL	D	0049
System	Phase	Area	Typology	Project	Lot	Company	D/S	Number

Duferco Clabecq

Rev.	Date	Description	Prepared	Checked	Approved		
						Date	30.01.2012
						Dus	

Duferco (SBM 2) Schaltschrank

in place of | Replaced by

RÖSLER finding a better way ...

load circuit
roll conveyor inlet M86

= ES
+ S

01-130070 00

Page 104
from 565

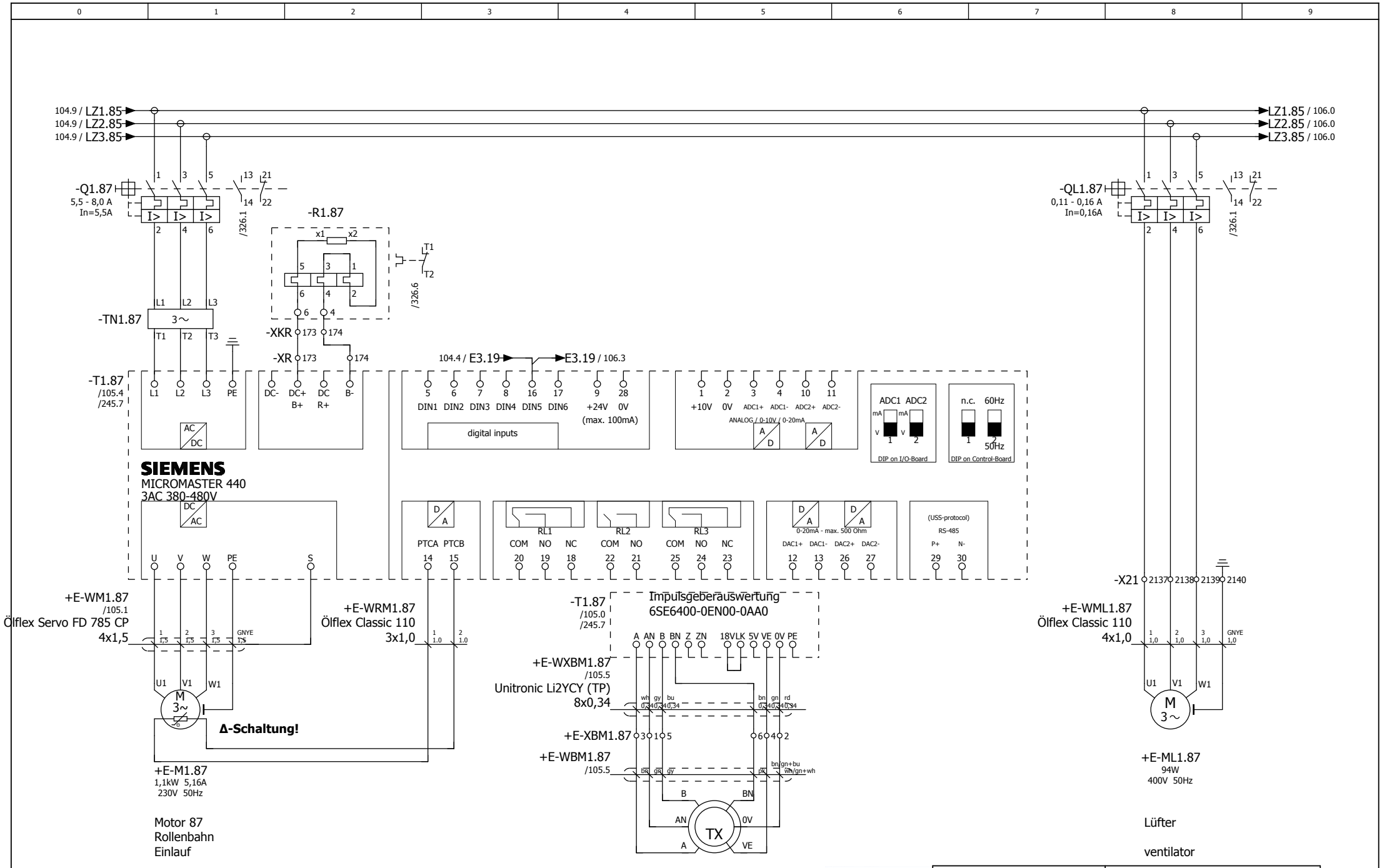

104

106

Duferco Clabecq

Management codes				Document identification				
5.3.0.0	CE	000	DW	QTPC	L04	ROSL	D	0049
System	Phase	Area	Typology	Project	Lot	Company	D/S	Number

						Date	30.01.2012	
						Dus		
Rev.	Date	Description	Prepared	Checked	Approved			

Duferco (SBM 2) Schaltschrank

in place of | Replaced by

RÖSLER finding a better way ...

load circuit
roll conveyor inlet M87

= ES
+ S

01-130070 00

Page 105
from 565

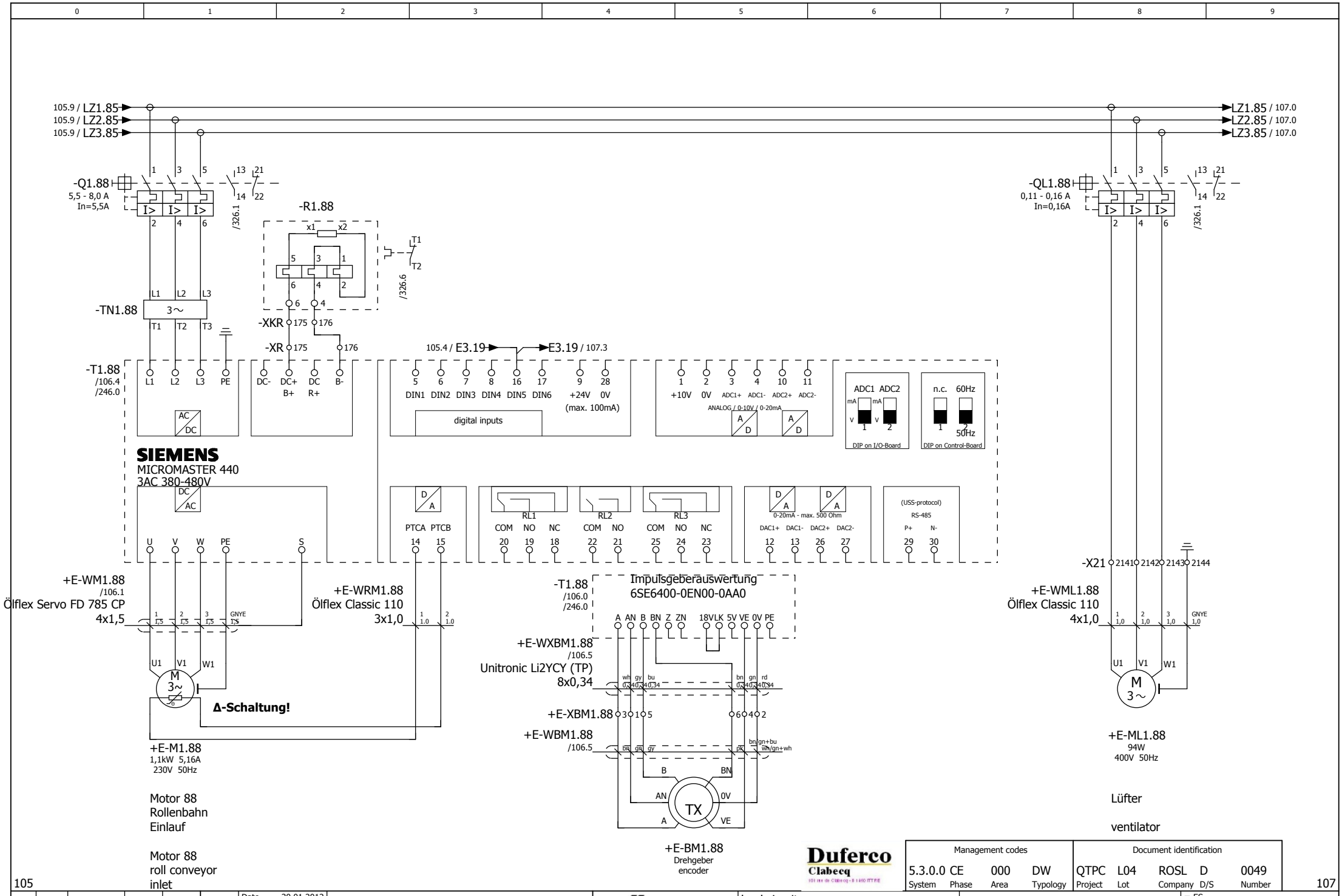

105

107

Duferco Clabecq

Management codes				Document identification				
5.3.0.0	CE	000	DW	QTPC	L04	ROSL	D	0049
System	Phase	Area	Typology	Project	Lot	Company	D/S	Number

						Date	30.01.2012	
						Dus		
Rev.	Date	Description	Prepared	Checked	Approved			

Duferco (SBM 2) Schaltschrank

in place of | Replaced by

RÖSLER finding a better way ...

load circuit
roll conveyor inlet M88

= ES
+ S

01-130070 00

Page 106
from 565

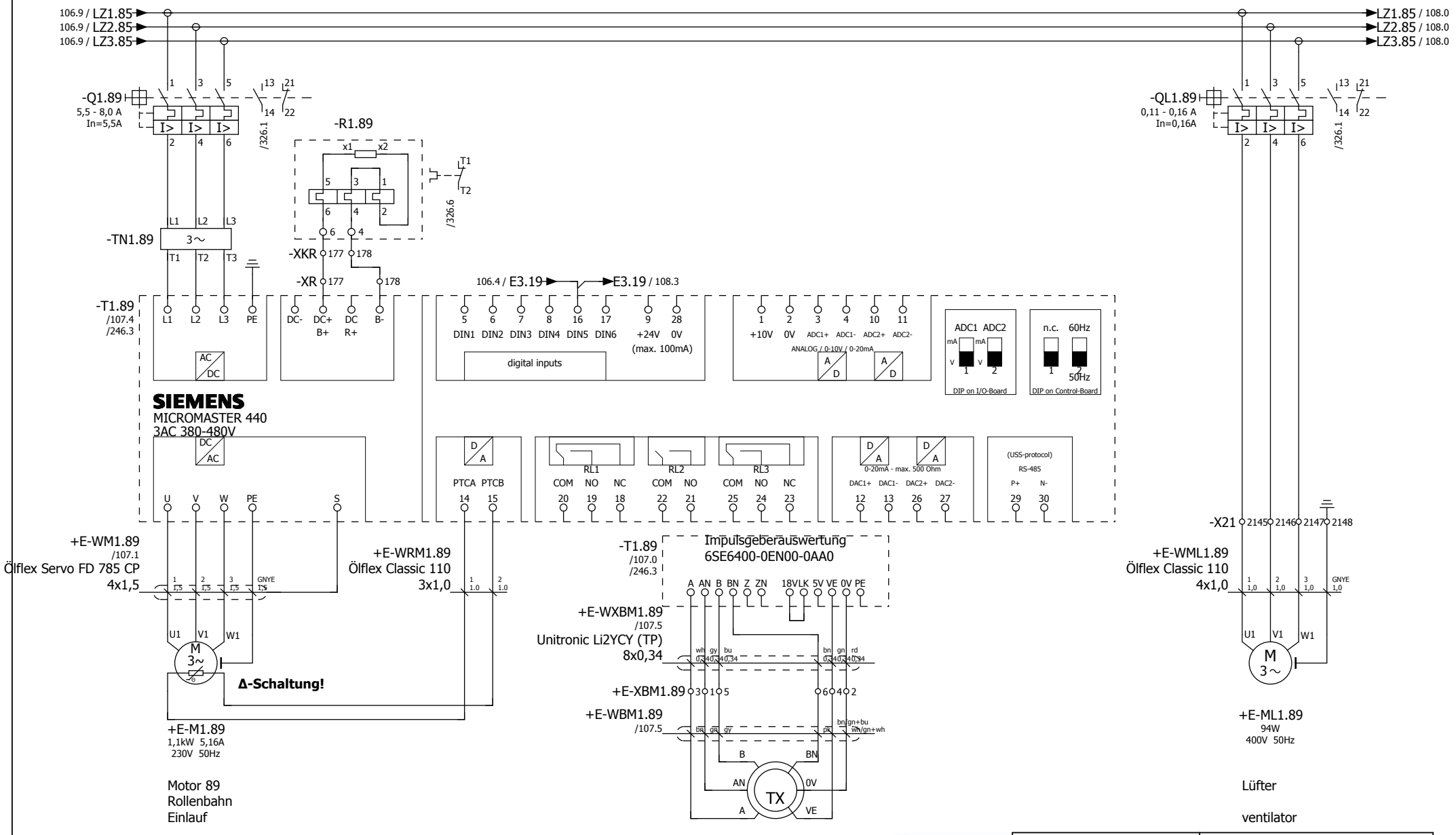

106

108

Duferco Clabecq

Management codes				Document identification				
5.3.0.0	CE	000	DW	QTPC	L04	ROSL	D	0049
System	Phase	Area	Typology	Project	Lot	Company	D/S	Number

						Date	30.01.2012	
						Dus		
Rev.	Date	Description	Prepared	Checked	Approved			

Duferco (SBM 2) Schaltschrank

in place of | Replaced by

RÖSLER finding a better way ...

load circuit
roll conveyor inlet M89

= ES
+ S

01-130070 00

Page 107
from 565

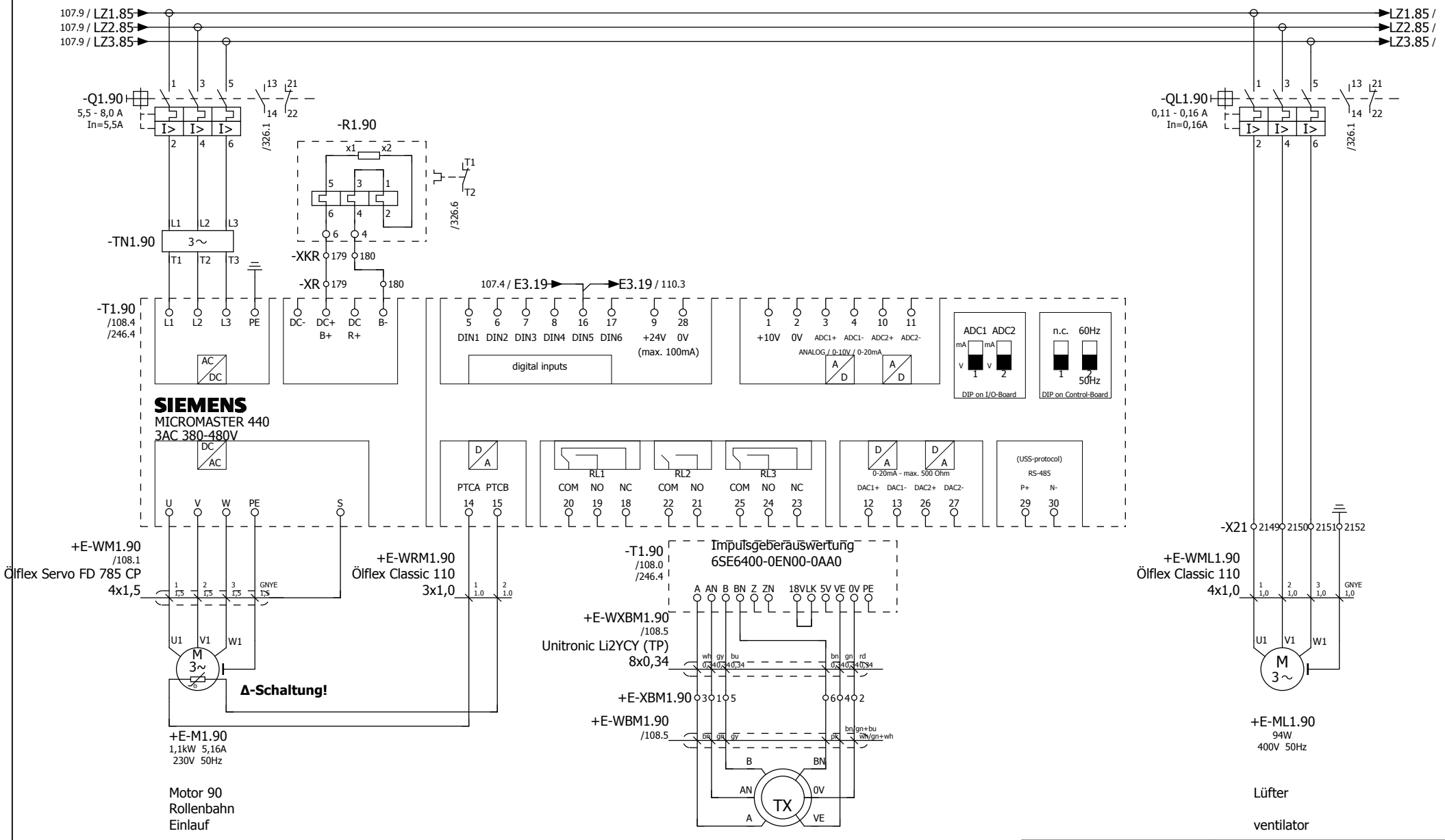

Management codes				Document identification				
5.3.0.0	CE	000	DW	QTPC	L04	ROSL	D	0049
System	Phase	Area	Typology	Project	Lot	Company	D/S	Number

Duferco Clabecq

107 109

Rev.	Date	Description	Prepared	Checked	Approved			
						Date	30.01.2012	
						Dus		

Duferco (SBM 2) Schaltschrank

in place of | Replaced by

RÖSLER finding a better way ...

load circuit
roll conveyor inlet M90

= ES
+ S

01-130070 00

Page 108
from 565

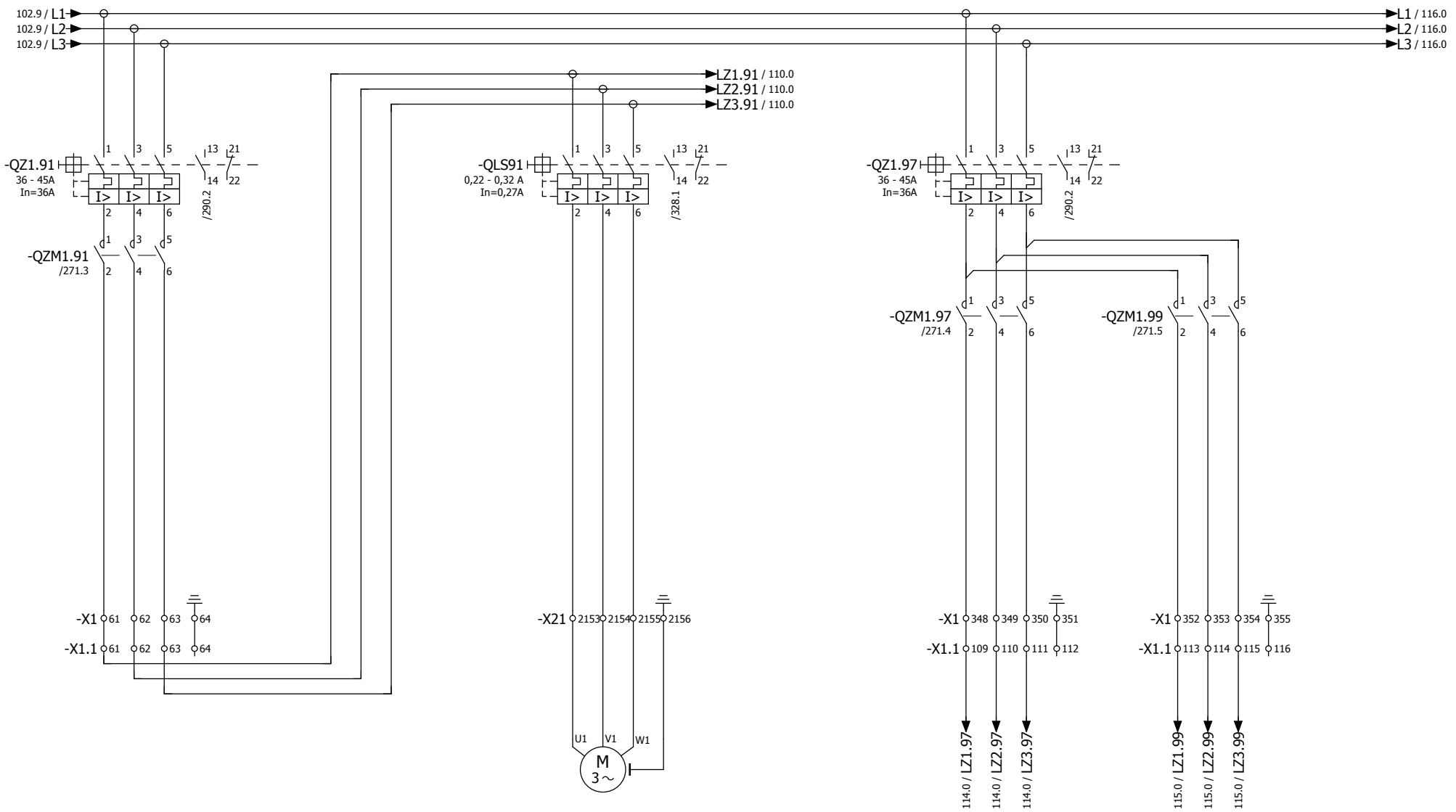

-MLS91
146W 0,27A
400V 50Hz

Zuleitung
Frequenzumrichter
Einlauf M91 - M95

input lead
frequency converter
inlet M91 - M95

Lüfter
Schaltschrank
ventilator
Enclosure

Zuleitung
Frequenzumrichter
Einlauf M97

input lead
frequency converter
inlet M97

Zuleitung
Frequenzumrichter
Einlauf M99

input lead
frequency converter
inlet M99

Duferco Clabecq

Management codes				Document identification				
5.3.0.0	CE	000	DW	QTPC	L04	ROSL	D	0049
System	Phase	Area	Typology	Project	Lot	Company	D/S	Number

Rev.	Date	Description	Prepared	Checked	Approved	Date 30.01.2012 Dus	Duferco (SBM 2) Schaltschrank	
							in place of	Replaced by

RÖSLER finding a better way ...

load circuit
input lead FU M91 - M99

= ES
+ S

01-130070 00

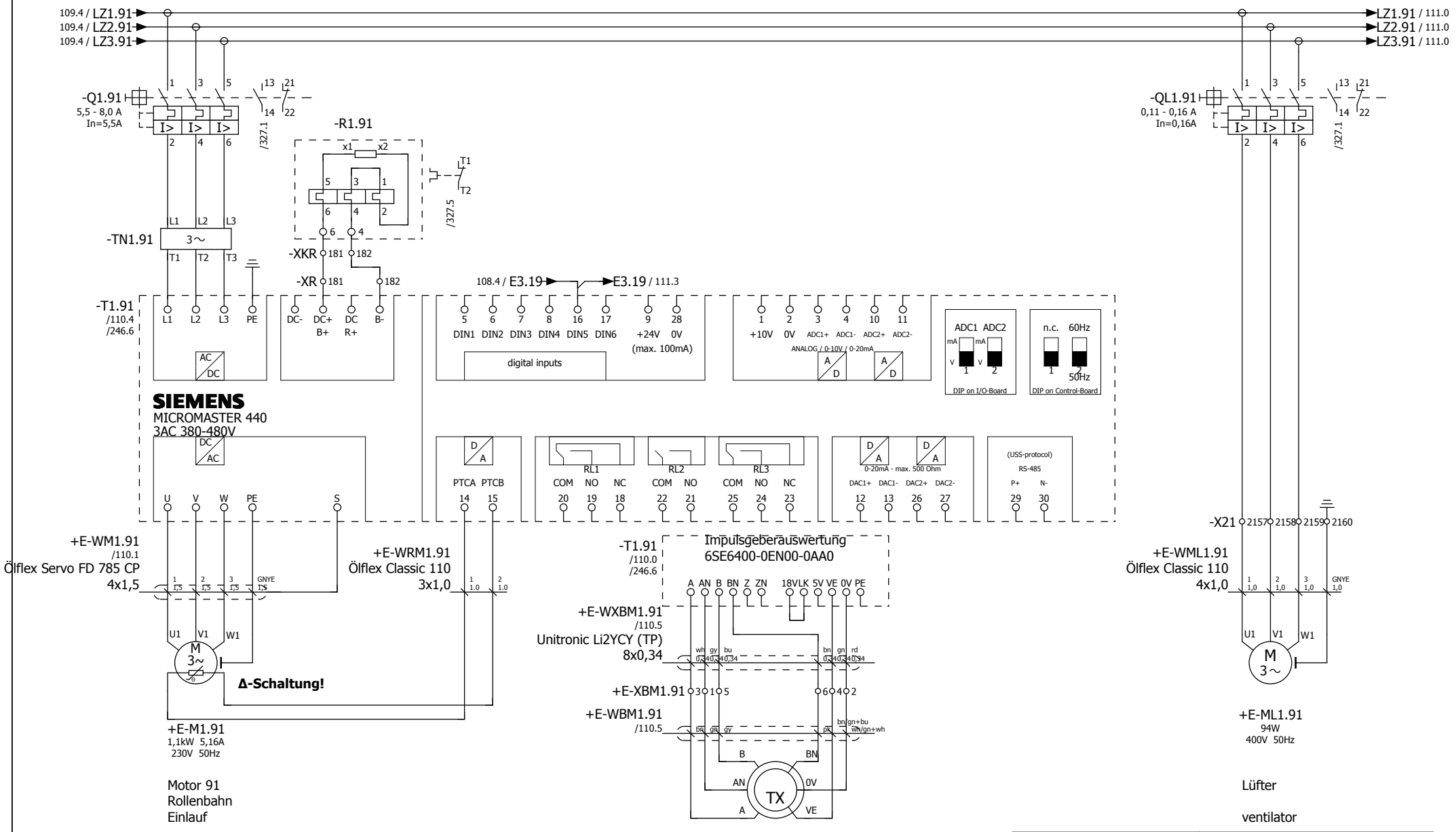

109

111

Management codes				Document identification				
5.3.0.0	CE	000	DW	QTPC	L04	ROSL	D	0049
System	Phase	Area	Typology	Project	Lot	Company	D/S	Number

Duferco Clabecq

						Date	30.01.2012	
						Dus		
Rev.	Date	Description	Prepared	Checked	Approved			

Duferco (SBM 2) Schaltschrank

in place of | Replaced by

RÖSLER finding a better way ...

load circuit
roll conveyor inlet M91

= ES
+ S

01-130070 00

Page 110
from 565

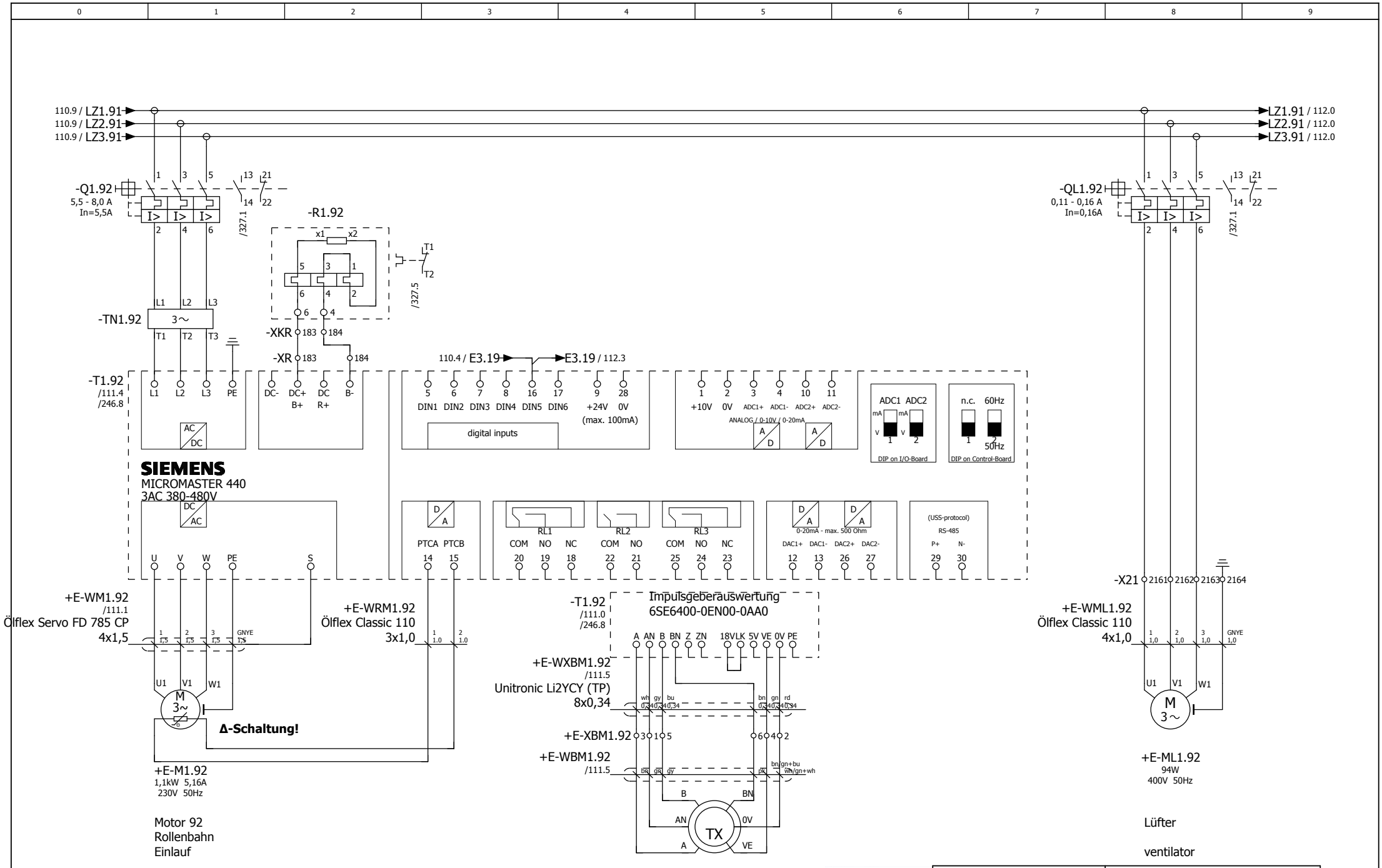

Management codes				Document identification				
5.3.0.0	CE	000	DW	QTPC	L04	ROSL	D	0049
System	Phase	Area	Typology	Project	Lot	Company	D/S	Number

Duferco Clabecq

110 112

Rev.	Date	Description	Prepared	Checked	Approved			
						Date	30.01.2012	
						Dus		

Duferco (SBM 2) Schaltschrank

in place of | Replaced by

RÖSLER finding a better way ...

load circuit
roll conveyor inlet M92

= ES
+ S

01-130070 00

Page 111
from 565

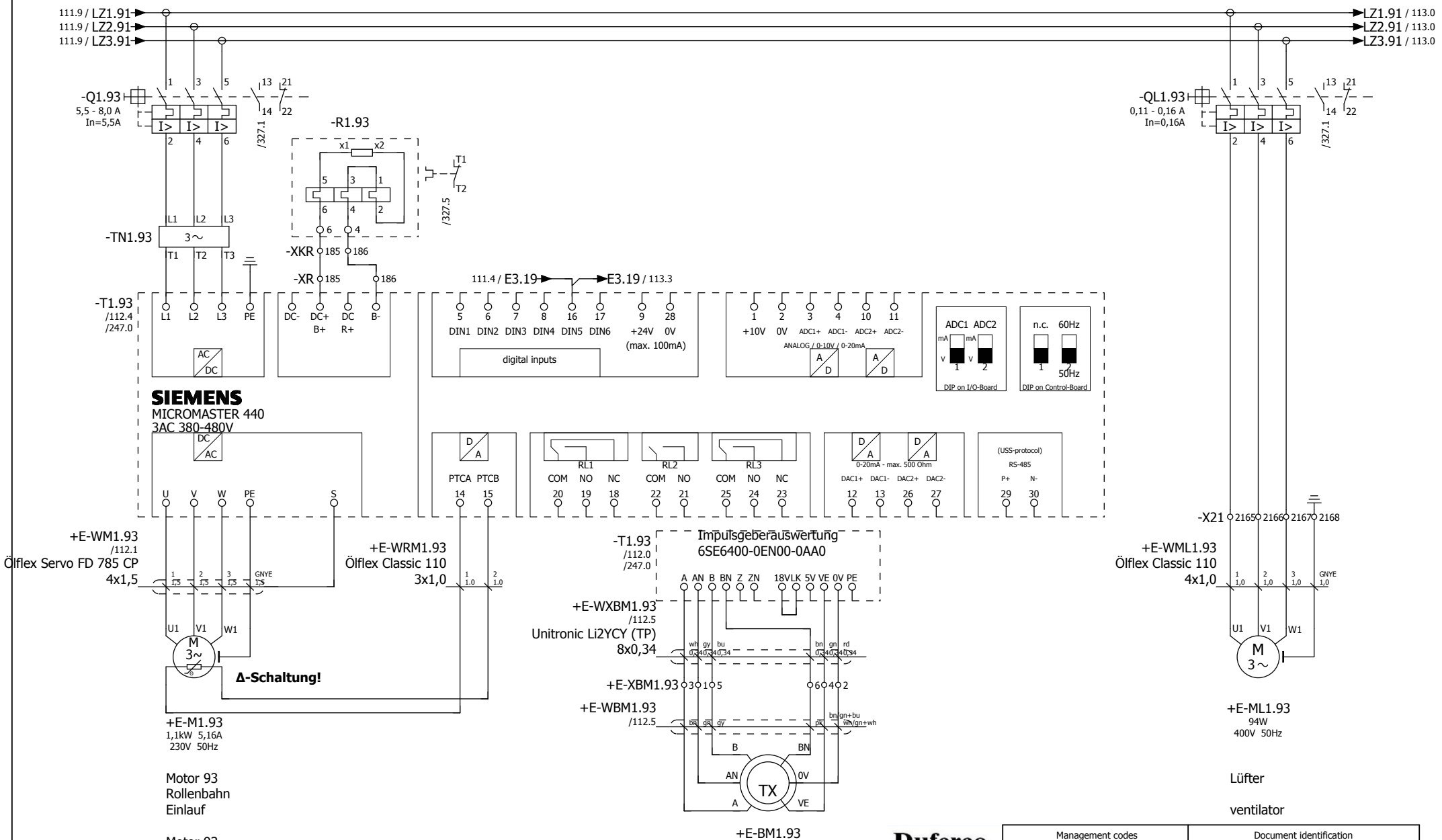

111

113

Duferco Clabecq

Management codes				Document identification				
5.3.0.0	CE	000	DW	QTPC	L04	ROSL	D	0049
System	Phase	Area	Typology	Project	Lot	Company	D/S	Number

						Date	30.01.2012	
						Dus		
Rev.	Date	Description	Prepared	Checked	Approved			

Duferco (SBM 2) Schaltschrank

in place of | Replaced by

RÖSLER finding a better way ...

load circuit
roll conveyor inlet M93

= ES
+ S

01-130070 00

Page 112
from 565

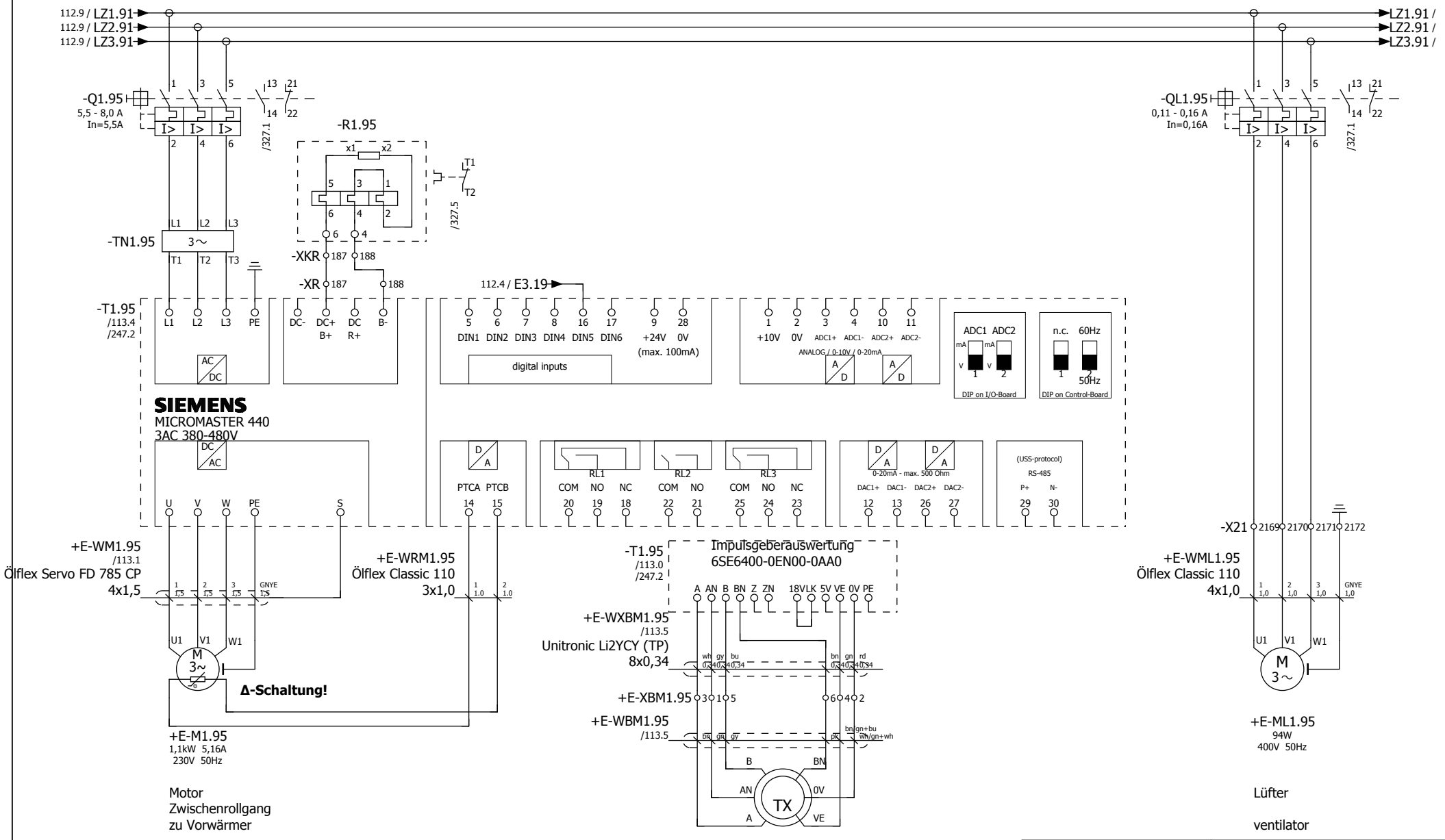

112

114

Duferco Clabecq

Management codes				Document identification				
5.3.0.0	CE	000	DW	QTPC	L04	ROSL	D	0049
System	Phase	Area	Typology	Project	Lot	Company	D/S	Number

						Date	30.01.2012	
						Dus		
Rev.	Date	Description	Prepared	Checked	Approved			

Duferco (SBM 2) Schaltschrank

in place of | Replaced by

RÖSLER finding a better way ...

load circuit
roll conveyor inside to preheater

= ES
+ S

01-130070 00

Page 113
from 565

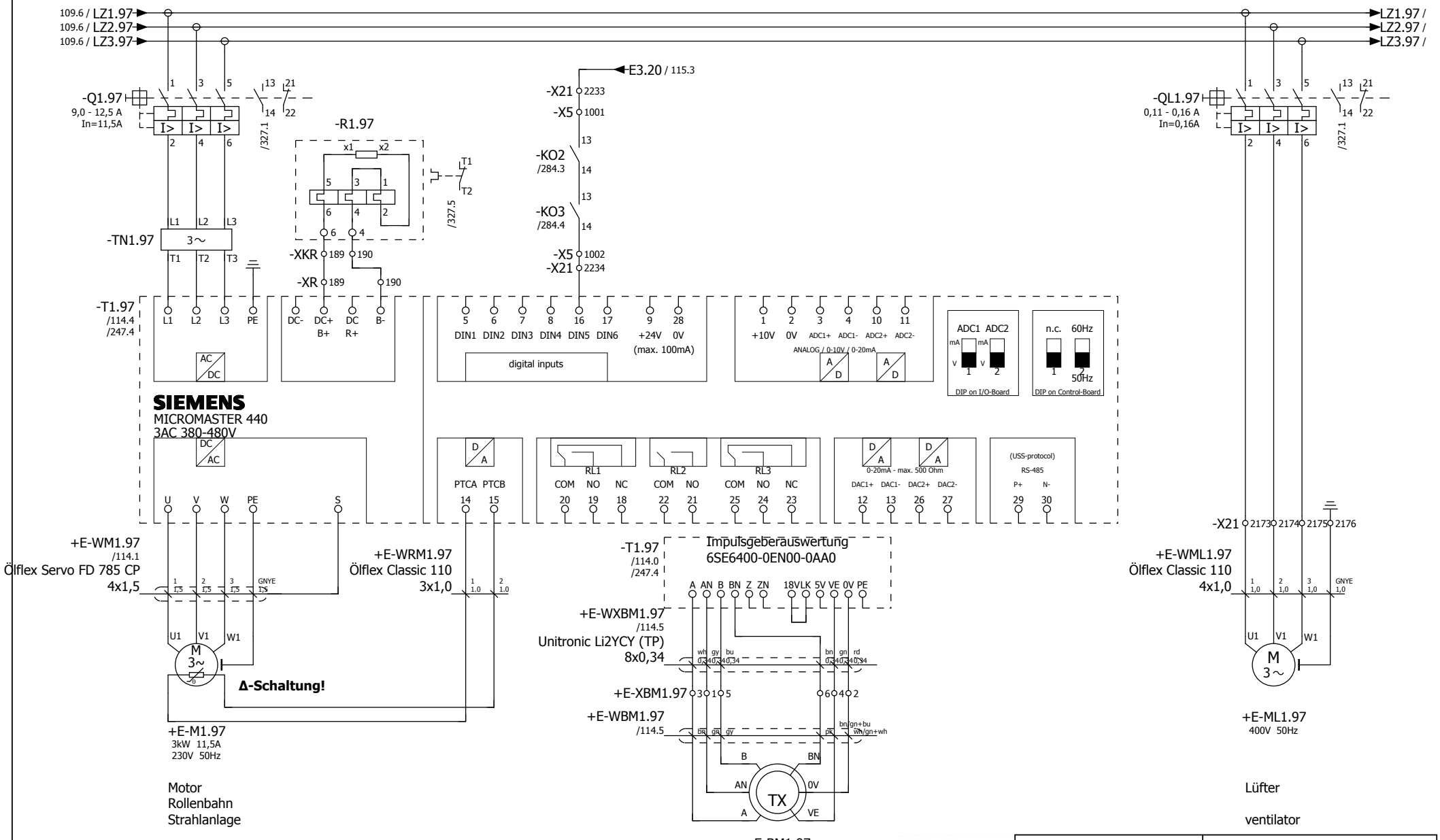

113

115

Duferco Clabecq

Management codes				Document identification				
5.3.0.0	CE	000	DW	QTPC	L04	ROSL	D	0049
System	Phase	Area	Typology	Project	Lot	Company	D/S	Number

Rev.	Date	Description	Prepared	Checked	Approved			
						Date	30.01.2012	
						Dus		

Duferco (SBM 2) Schaltschrank

in place of | Replaced by

RÖSLER finding a better way ...

load circuit
roll conveyor Blasting installation

= ES
+ S

01-130070 00

Page 114
from 565

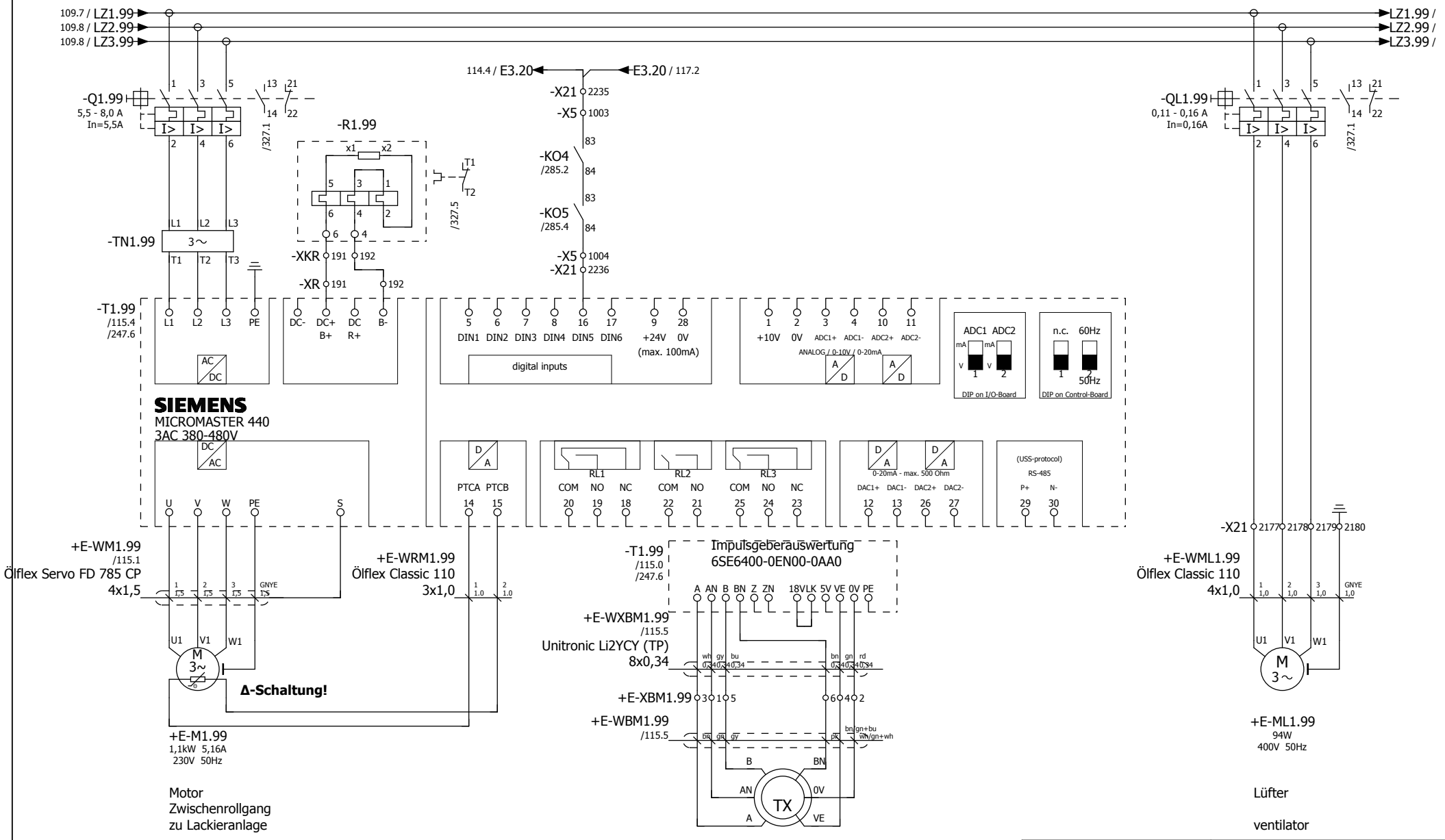

114

116

Duferco Clabecq

Management codes				Document identification				
5.3.0.0	CE	000	DW	QTPC	L04	ROSL	D	0049
System	Phase	Area	Typology	Project	Lot	Company	D/S	Number

Rev.	Date	Description	Prepared	Checked	Approved		
						Date	30.01.2012
						Dus	

Duferco (SBM 2) Schaltschrank

in place of | Replaced by

RÖSLER finding a better way ...

load circuit
roll conveyor inside to painting installation

= ES
+ S

01-130070 00

Page 115
from 565

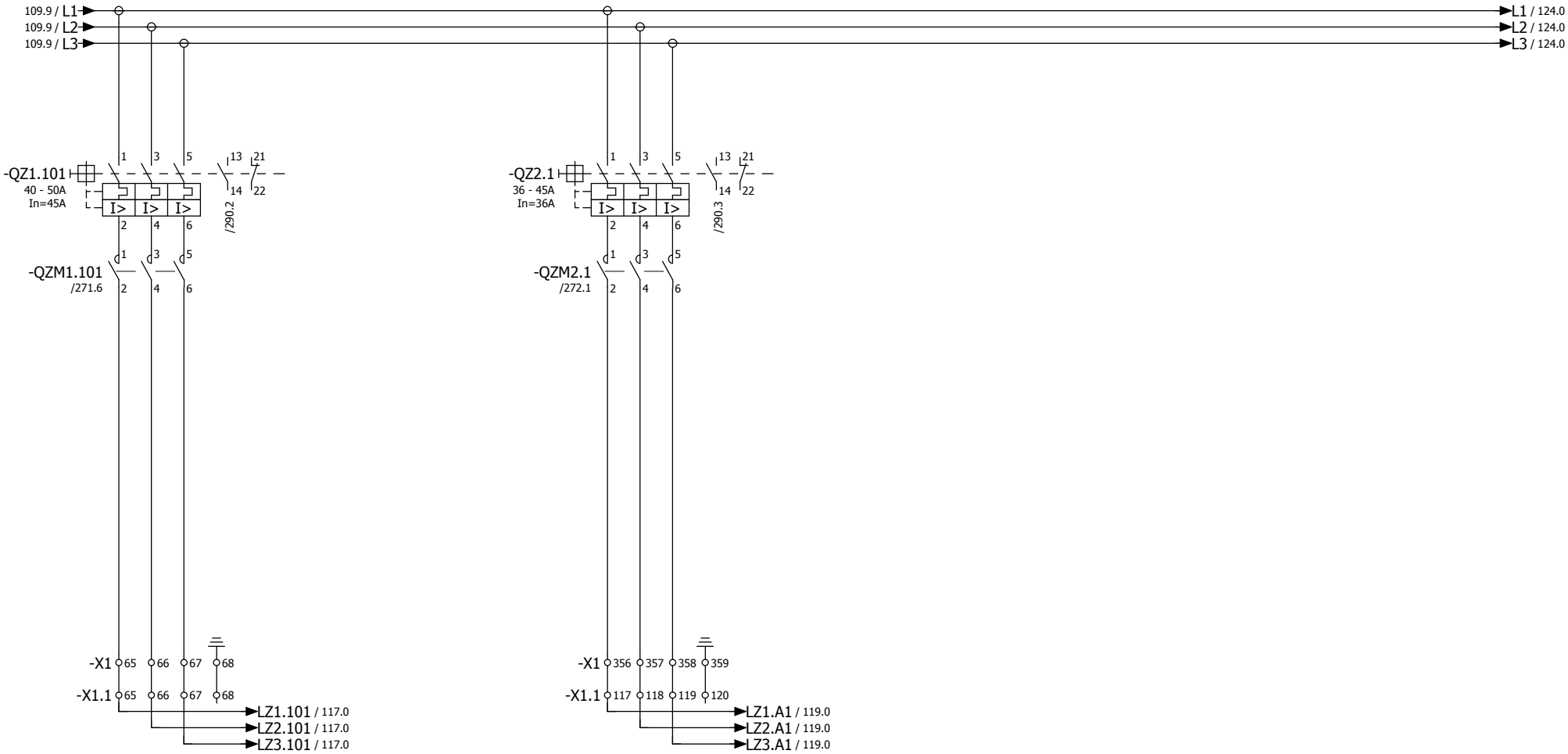

Zuleitung
Frequenzumrichter
Kettenförderer 1+2

input lead
frequency converter
chain conveyor 1+2

Zuleitung
Frequenzumrichter
Auslauf M1 - M5

input lead
frequency converter
outlet M1 - M5

Duferco Clabecq

Management codes				Document identification				
5.3.0.0	CE	000	DW	QTPC	L04	ROSL	D	0049
System	Phase	Area	Typology	Project	Lot	Company	D/S	Number

Rev.	Date	Description	Prepared	Checked	Approved	Date 30.01.2012	Dus	Duferco (SBM 2) Schaltschrank	RÖSLER finding a better way ...	load circuit input lead FU M101 - M102 + outlet M1 - M5	= ES	+ S	Page 116
								in place of	Replaced by		01-130070 00		from 565

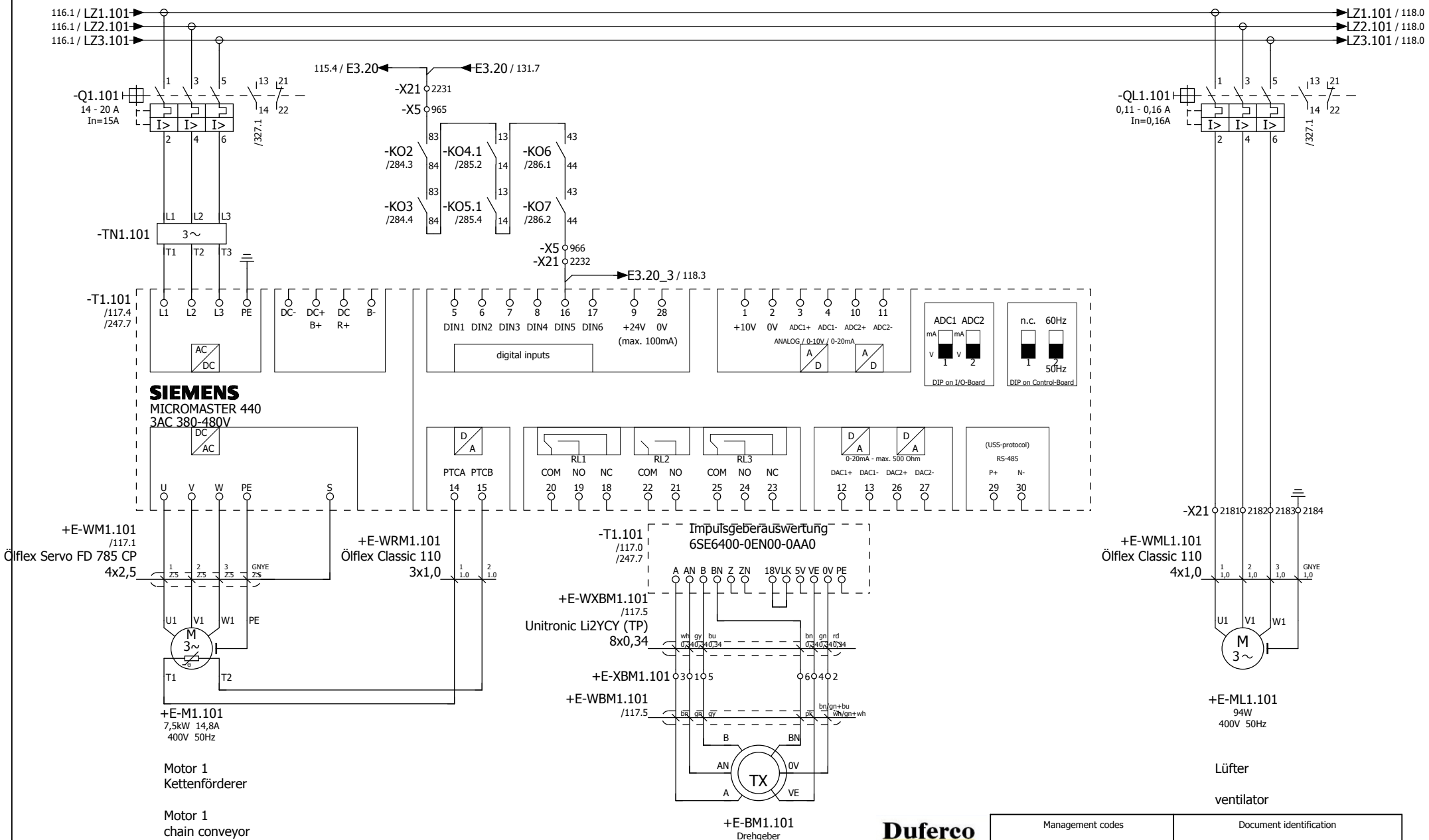

116

118

Management codes				Document identification				
5.3.0.0	CE	000	DW	QTPC	L04	ROSL	D	0049
System	Phase	Area	Typology	Project	Lot	Company	D/S	Number

Duferco Clabecq

Rev.	Date	Description	Prepared	Checked	Approved			
						Date	30.01.2012	
						Dus		

Duferco (SBM 2) Schaltschrank

in place of | Replaced by

RÖSLER finding a better way ...

load circuit
chain conveyor 1

= ES
+ S

01-130070 00

Page 117
from 565

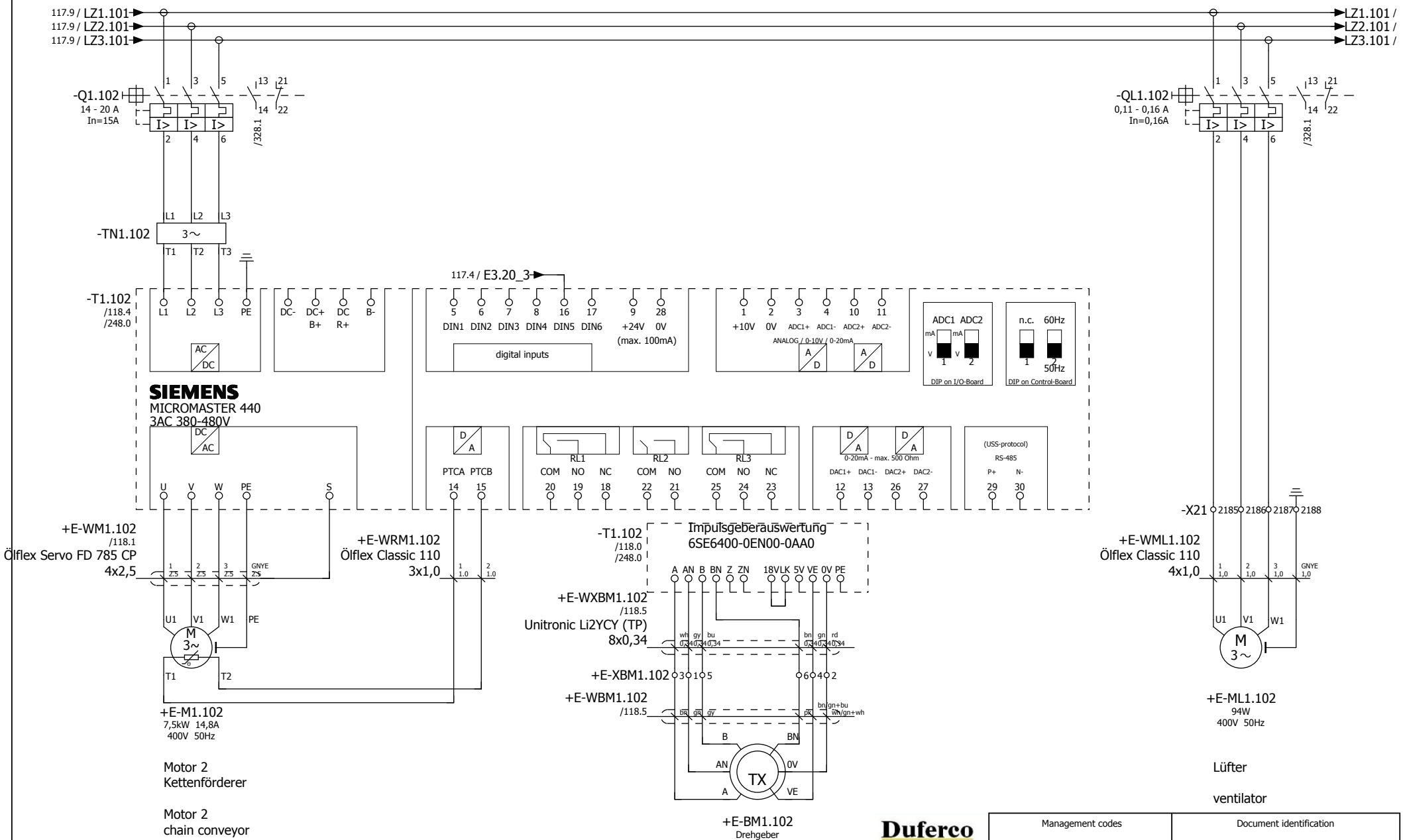

117

119

Management codes				Document identification				
5.3.0.0	CE	000	DW	QTPC	L04	ROSL	D	0049
System	Phase	Area	Typology	Project	Lot	Company	D/S	Number

						Date	30.01.2012	
						Dus		
Rev.	Date	Description	Prepared	Checked	Approved			

Duferco (SBM 2) Schaltschrank

in place of | Replaced by

RÖSLER finding a better way ...

load circuit
chain conveyor 2

= ES
+ S

01-130070 00

Page 118
from 565

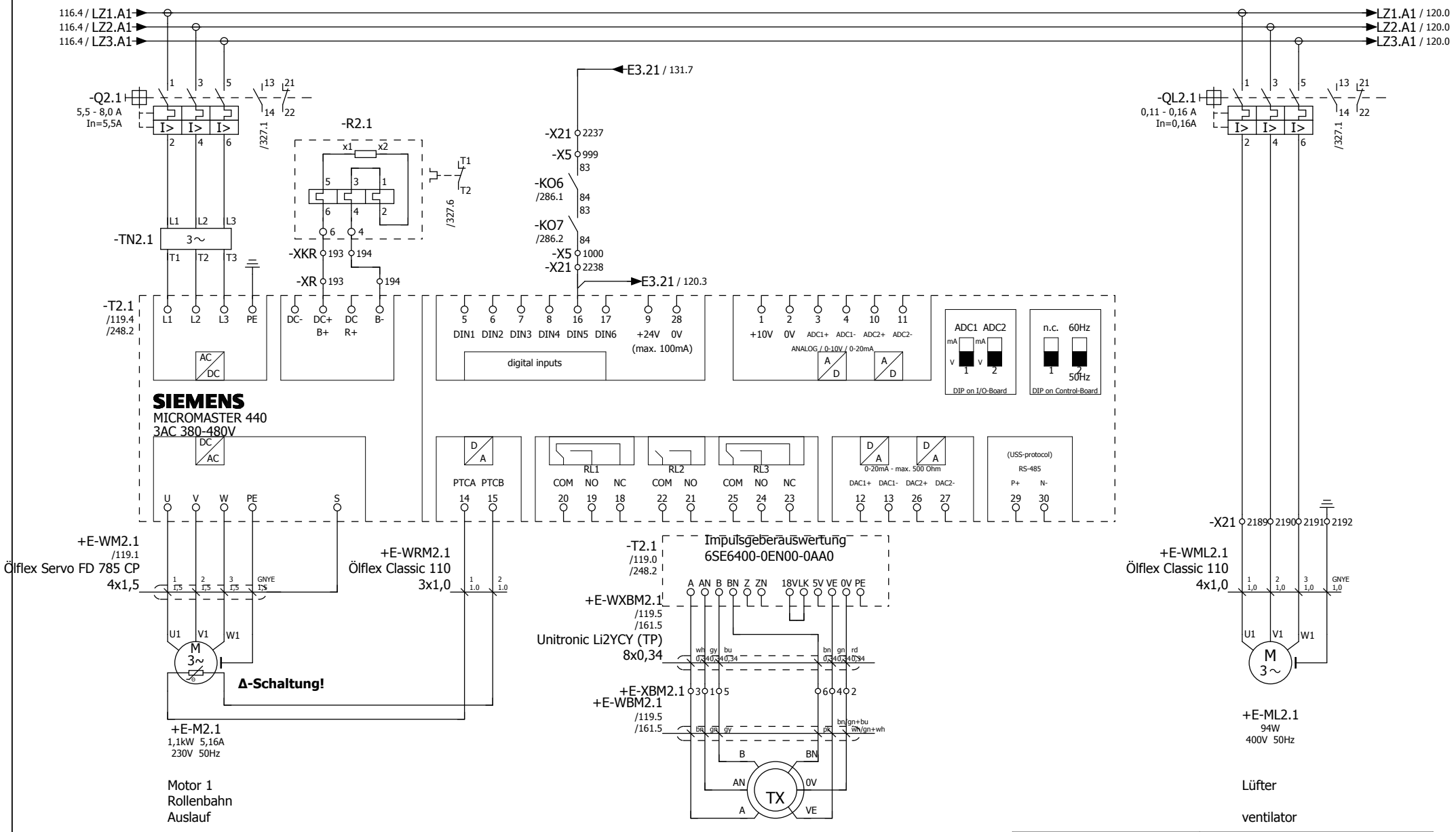

118

120

Management codes				Document identification				
5.3.0.0	CE	000	DW	QTPC	L04	ROSL	D	0049
System	Phase	Area	Typology	Project	Lot	Company	D/S	Number

Duferco Clabecq

Rev.	Date	Description	Prepared	Checked	Approved			
						Date	30.01.2012	
						Dus		

Duferco (SBM 2) Schaltschrank

in place of | Replaced by

RÖSLER finding a better way ...

load circuit
roll conveyor outlet M1

= ES
+ S

01-130070 00

Page 119
from 565

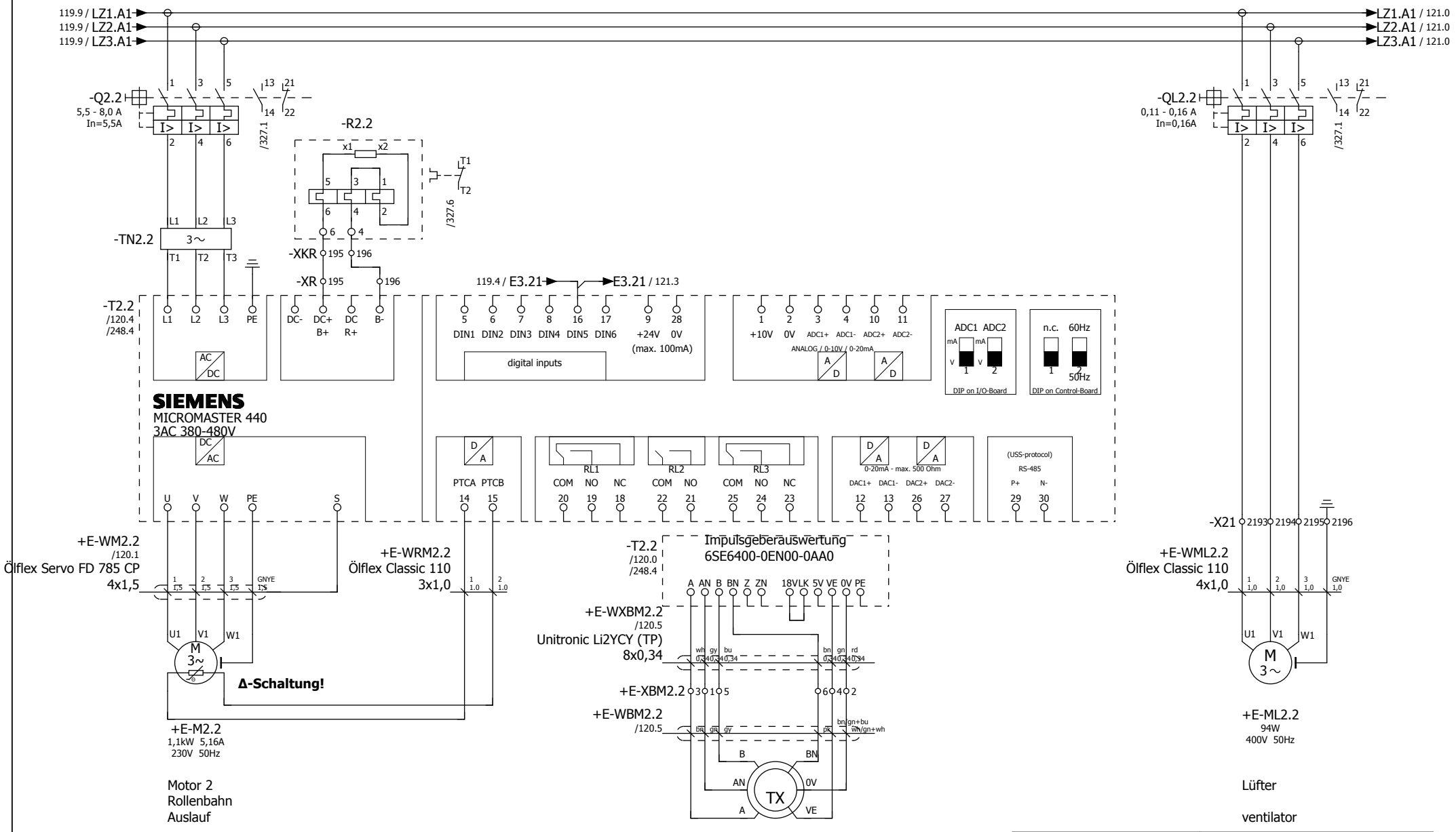

119

121

Management codes				Document identification				
5.3.0.0	CE	000	DW	QTPC	L04	ROSL	D	0049
System	Phase	Area	Typology	Project	Lot	Company	D/S	Number

Duferco Clabecq

Rev.	Date	Description	Prepared	Checked	Approved			
						Date	30.01.2012	
						Dus		

Duferco (SBM 2) Schaltschrank

in place of | Replaced by

RÖSLER finding a better way ...

load circuit
roll conveyor outlet M2

= ES
+ S

01-130070 00

Page 120
from 565

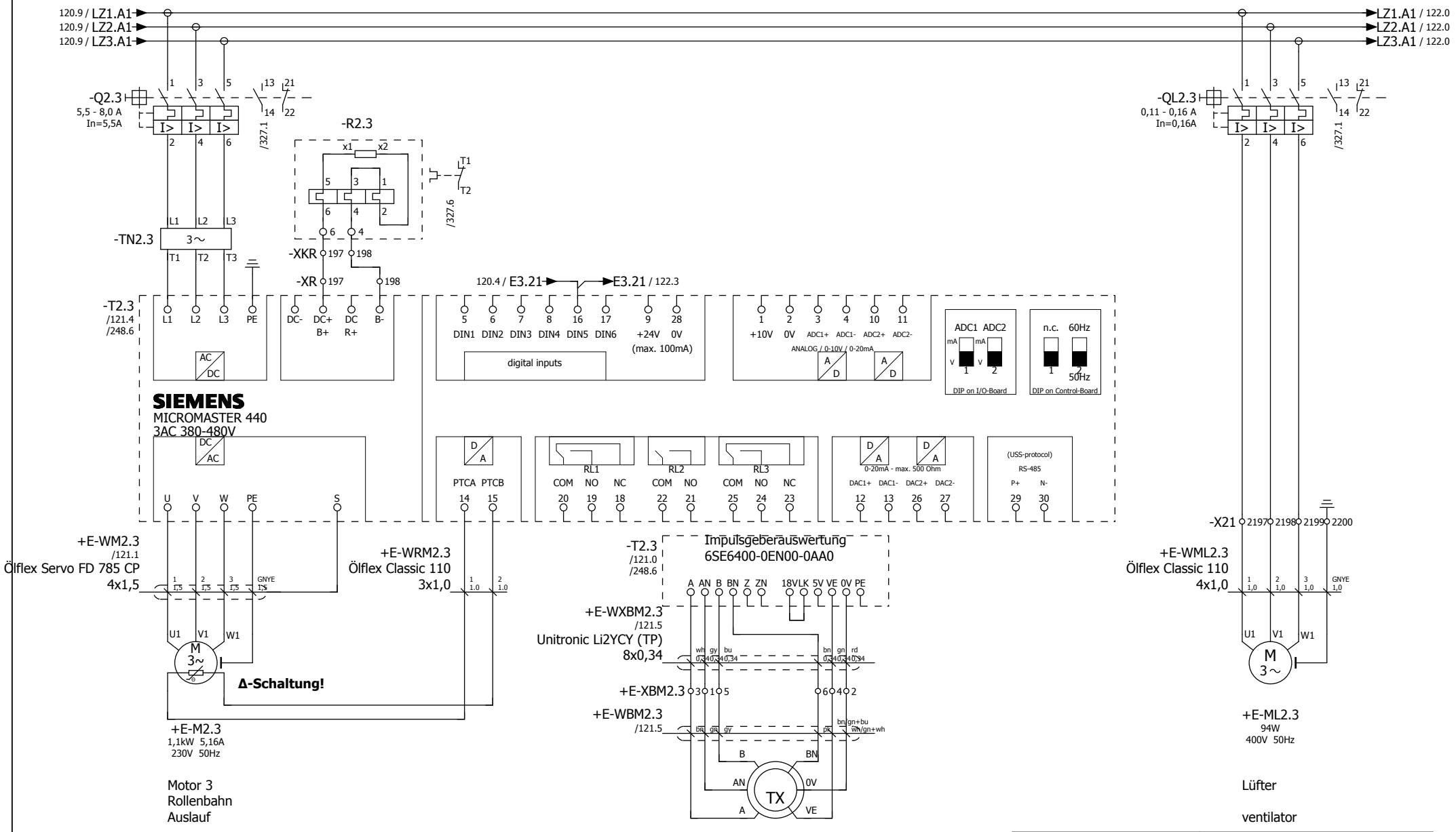

Duferco Clabecq

Management codes				Document identification				
5.3.0.0	CE	000	DW	QTPC	L04	ROSL	D	0049
System	Phase	Area	Typology	Project	Lot	Company	D/S	Number

Rev.	Date	Description	Prepared	Checked	Approved			
						Date	30.01.2012	
						Dus		

Duferco (SBM 2) Schaltschrank

in place of | Replaced by

RÖSLER finding a better way ...

load circuit
roll conveyor outlet M3

= ES
+ S

01-130070 00

Page 121
from 565

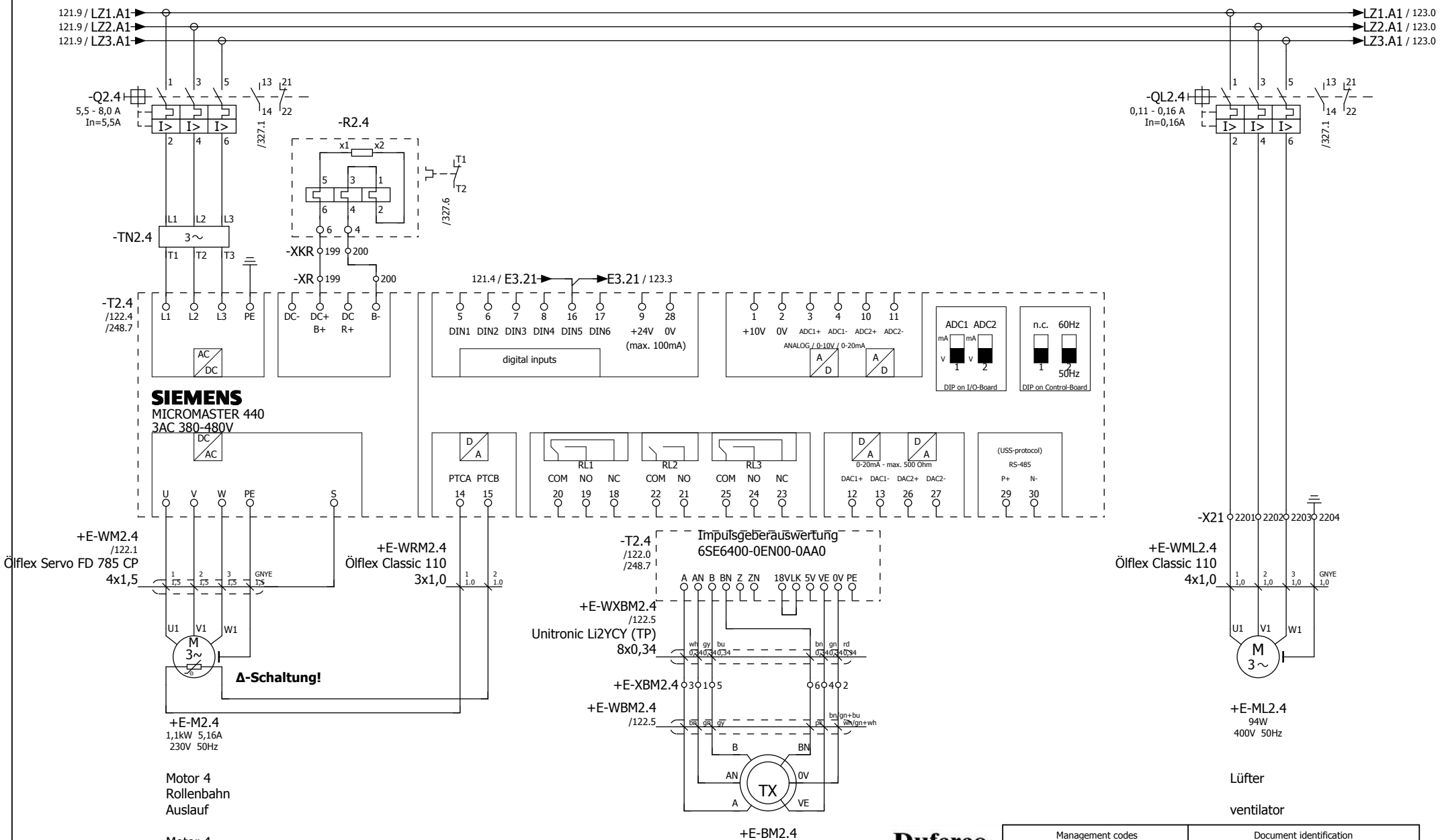

121

123

Duferco Clabecq

Management codes				Document identification				
5.3.0.0	CE	000	DW	QTPC	L04	ROSL	D	0049
System	Phase	Area	Typology	Project	Lot	Company	D/S	Number

						Date	30.01.2012	
						Dus		
Rev.	Date	Description	Prepared	Checked	Approved			

Duferco (SBM 2) Schaltschrank

in place of | Replaced by

RÖSLER finding a better way ...

load circuit
roll conveyor outlet M4

= ES
+ S

01-130070 00

Page 122
from 565

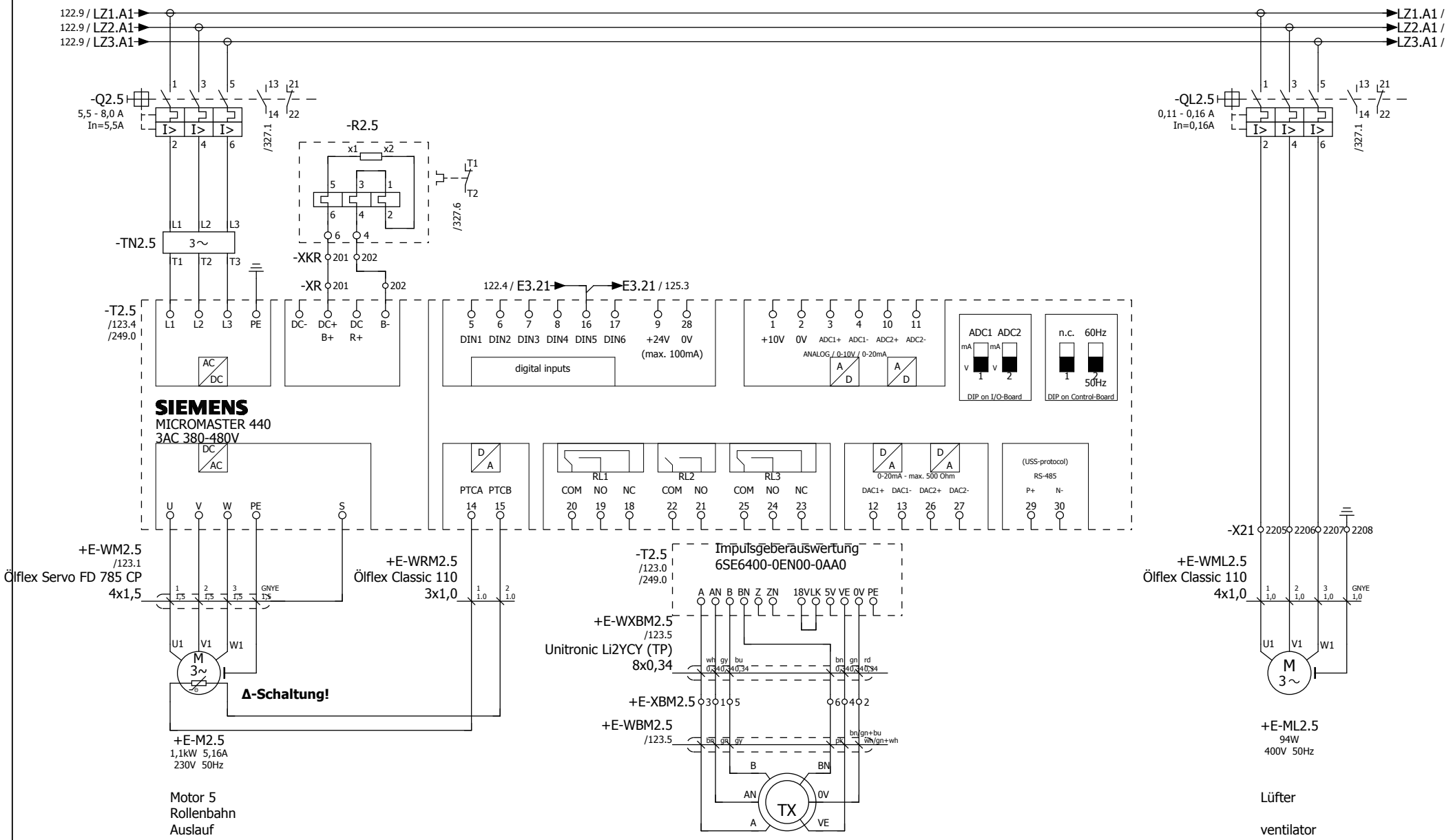

122

124

Duferco Clabecq

Management codes				Document identification				
5.3.0.0	CE	000	DW	QTPC	L04	ROSL	D	0049
System	Phase	Area	Typology	Project	Lot	Company	D/S	Number

Rev.	Date	Description	Prepared	Checked	Approved			
						Date	30.01.2012	
						Dus		

Duferco (SBM 2) Schaltschrank

in place of | Replaced by

RÖSLER finding a better way ...

load circuit
roll conveyor outlet M5

= ES
+ S

01-130070 00

Page 123
from 565

Zuleitung
Frequenzumrichter
Auslauf M6-10

input lead
frequency converter
outlet M6-10

Duferco Clabecq

Management codes				Document identification				
5.3.0.0	CE	000	DW	QTPC	L04	ROSL	D	0049
System	Phase	Area	Typology	Project	Lot	Company	D/S	Number

123 125

						Date 30.01.2012			
						Dus			
Rev.	Date	Description	Prepared	Checked	Approved		Duferco (SBM 2) Schaltschrank	in place of	Replaced by

RÖSLER finding a better way ...

load circuit
input lead FU M6 - M10

= ES
+ S

01-130070 00

Page 124
from 565

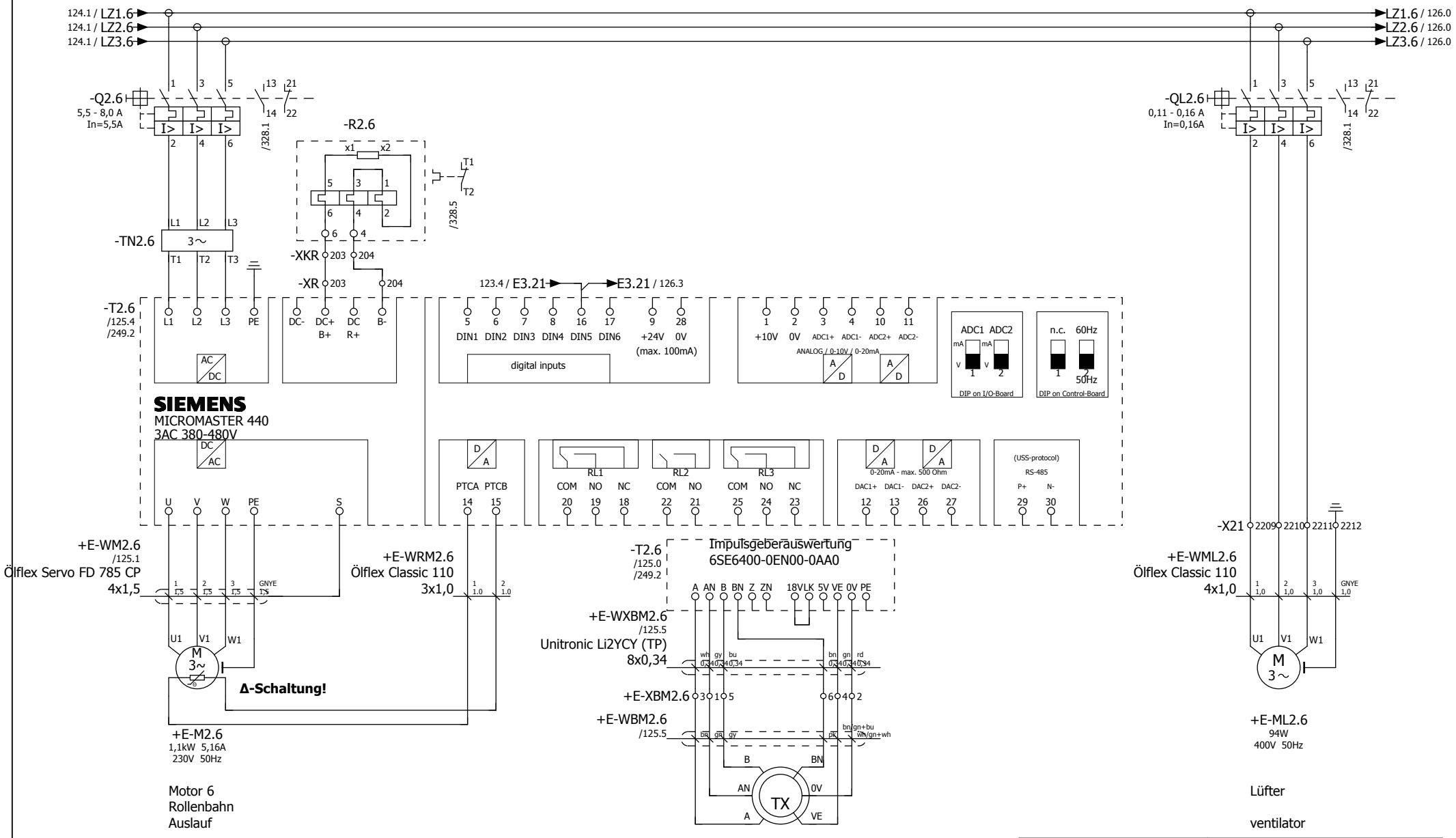

124

126

Duferco Clabecq

Management codes				Document identification				
5.3.0.0	CE	000	DW	QTPC	L04	ROSL	D	0049
System	Phase	Area	Typology	Project	Lot	Company	D/S	Number

Rev.	Date	Description	Prepared	Checked	Approved			
						Date	30.01.2012	
						Dus		

Duferco (SBM 2) Schaltschrank

in place of | Replaced by

RÖSLER finding a better way ...

load circuit
roll conveyor outlet M6

= ES
+ S

01-130070 00

Page 125
from 565

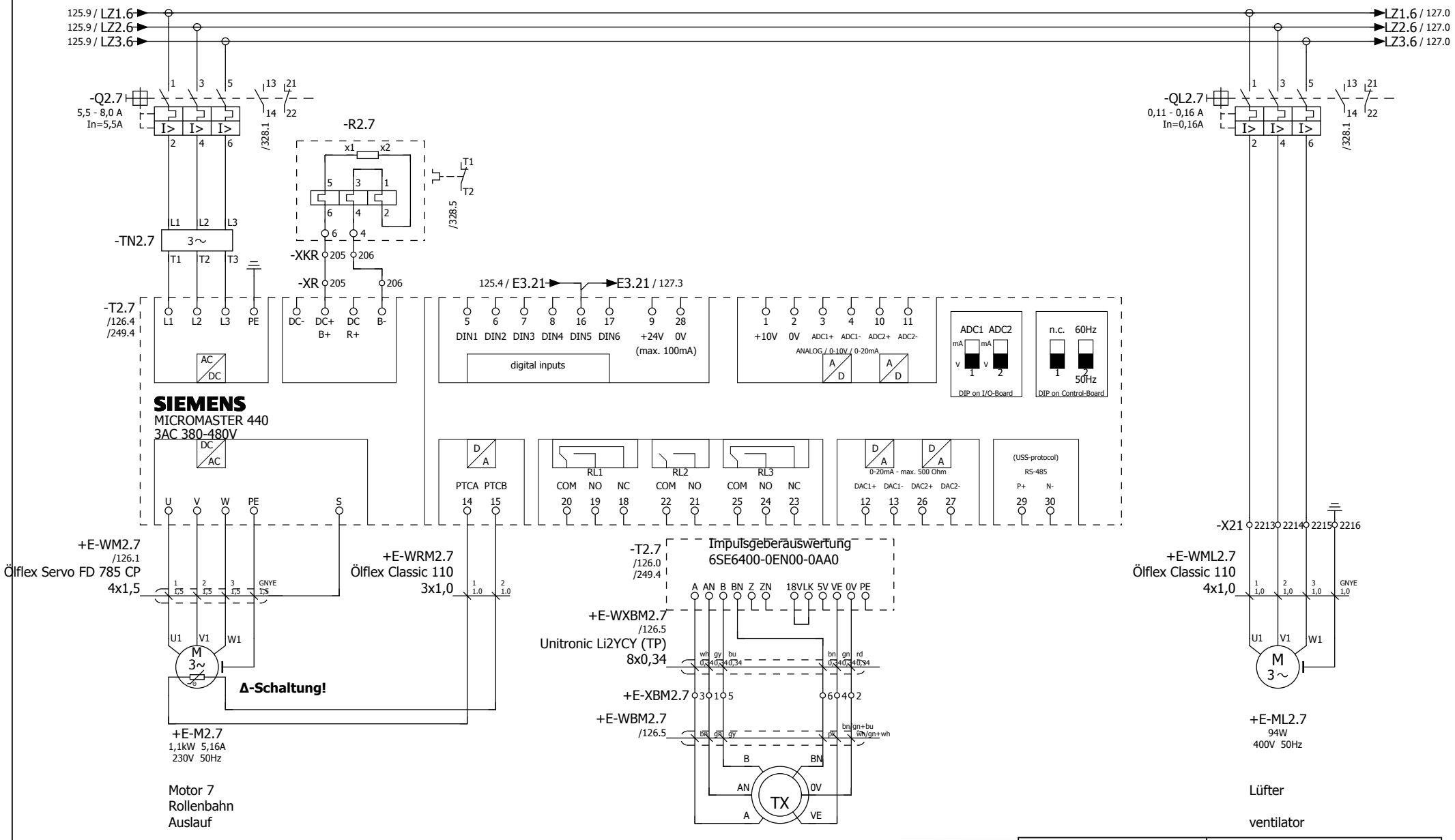

125

127

Duferco Clabecq

Management codes				Document identification				
5.3.0.0	CE	000	DW	QTPC	L04	ROSL	D	0049
System	Phase	Area	Typology	Project	Lot	Company	D/S	Number

Rev.	Date	Description	Prepared	Checked	Approved			
						Date	30.01.2012	
						Dus		

Duferco (SBM 2) Schaltschrank

in place of | Replaced by

RÖSLER finding a better way ...

load circuit
roll conveyor outlet M7

= ES
+ S

01-130070 00

Page 126
from 565

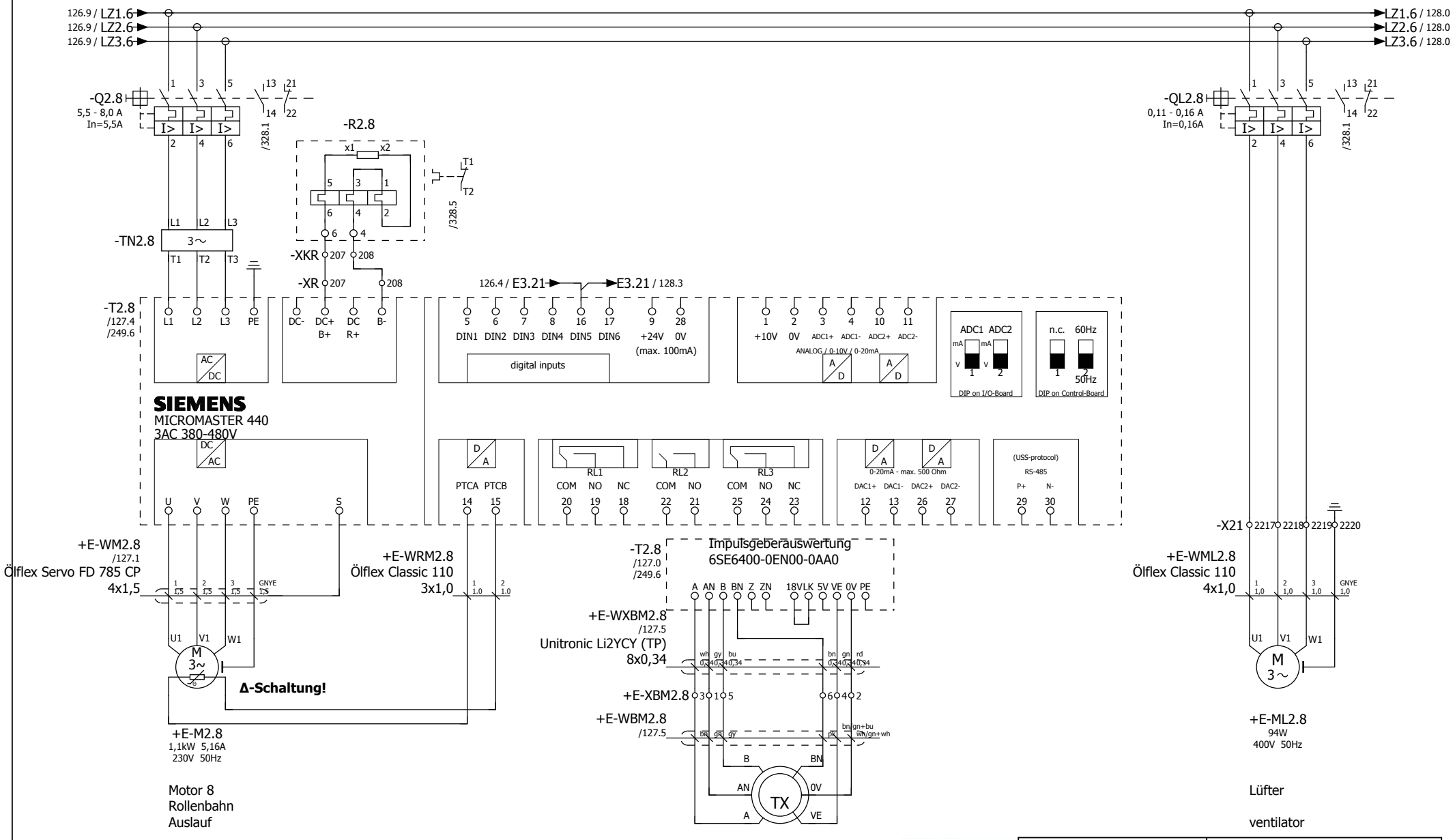

126

128

Duferco Clabecq

Management codes				Document identification				
5.3.0.0	CE	000	DW	QTPC	L04	ROSL	D	0049
System	Phase	Area	Typology	Project	Lot	Company	D/S	Number

Rev.	Date	Description	Prepared	Checked	Approved			
						Date	30.01.2012	
						Dus		

Duferco (SBM 2) Schaltschrank

in place of | Replaced by

RÖSLER finding a better way ...

load circuit
roll conveyor outlet M8

= ES
+ S

01-130070 00

Page 127
from 565

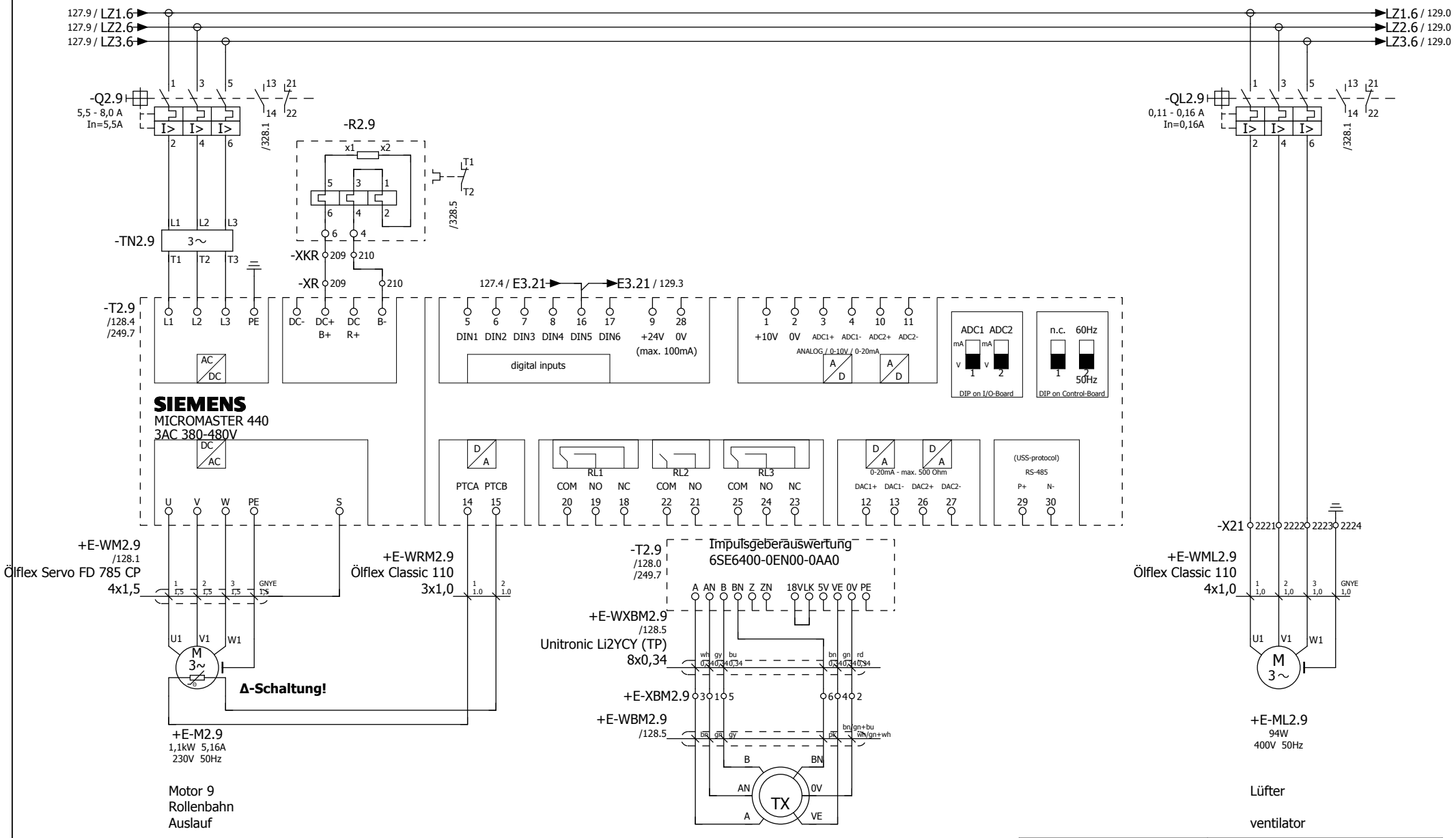

127

129

Duferco Clabecq

Management codes				Document identification				
5.3.0.0	CE	000	DW	QTPC	L04	ROSL	D	0049
System	Phase	Area	Typology	Project	Lot	Company	D/S	Number

Rev.	Date	Description	Prepared	Checked	Approved			
						Date	30.01.2012	
						Dus		

Duferco (SBM 2) Schaltschrank

in place of | Replaced by

RÖSLER finding a better way ...

load circuit
roll conveyor outlet M9

= ES
+ S

01-130070 00

Page 128
from 565

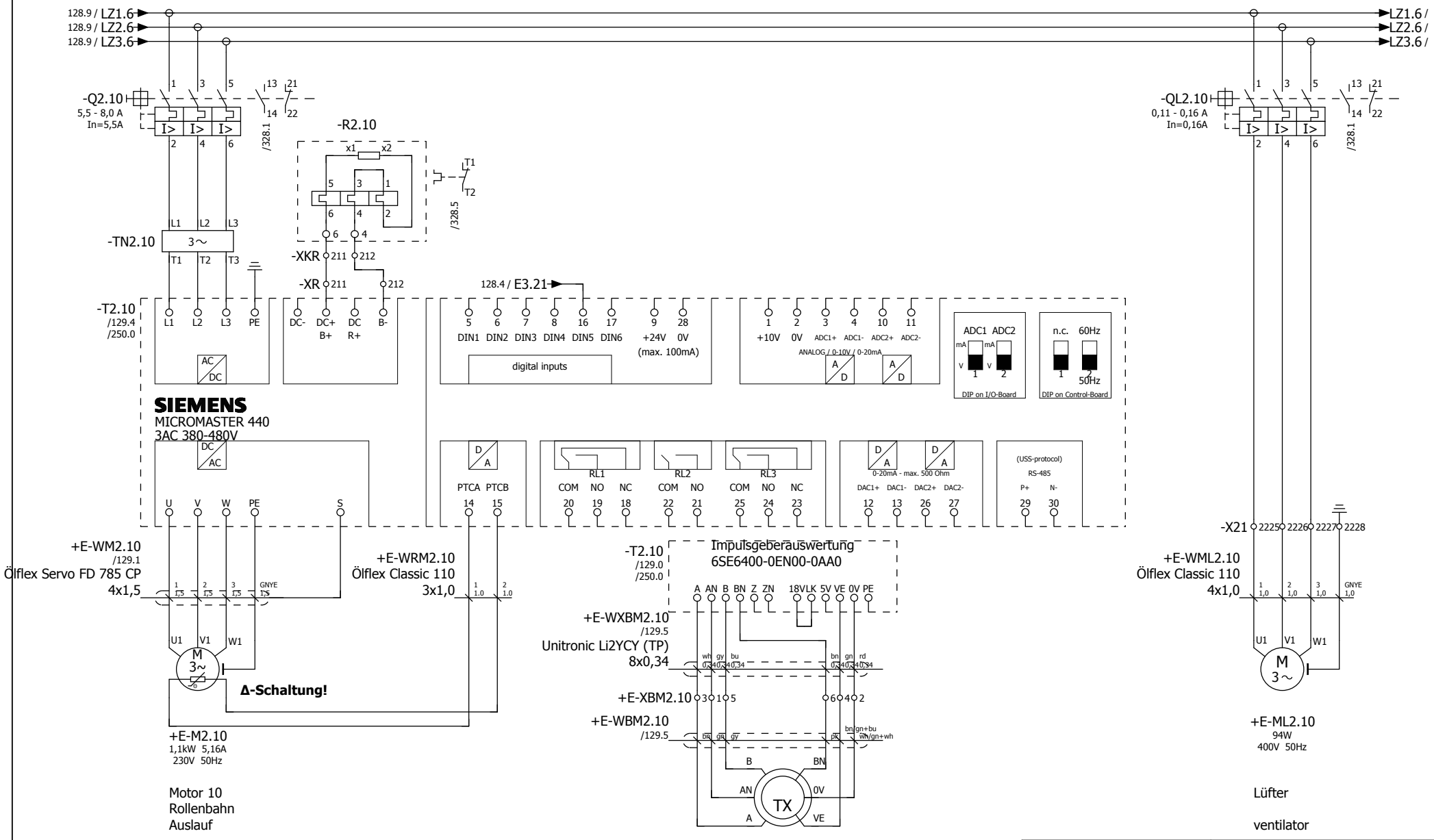

128

130

Duferco Clabecq

Management codes				Document identification				
5.3.0.0	CE	000	DW	QTPC	L04	ROSL	D	0049
System	Phase	Area	Typology	Project	Lot	Company	D/S	Number

						Date	30.01.2012	
						Dus		
Rev.	Date	Description	Prepared	Checked	Approved			

Duferco (SBM 2) Schaltschrank

in place of | Replaced by

RÖSLER finding a better way ...

load circuit
roll conveyor outlet M10

= ES
+ S

01-130070 00

Page 129
from 565

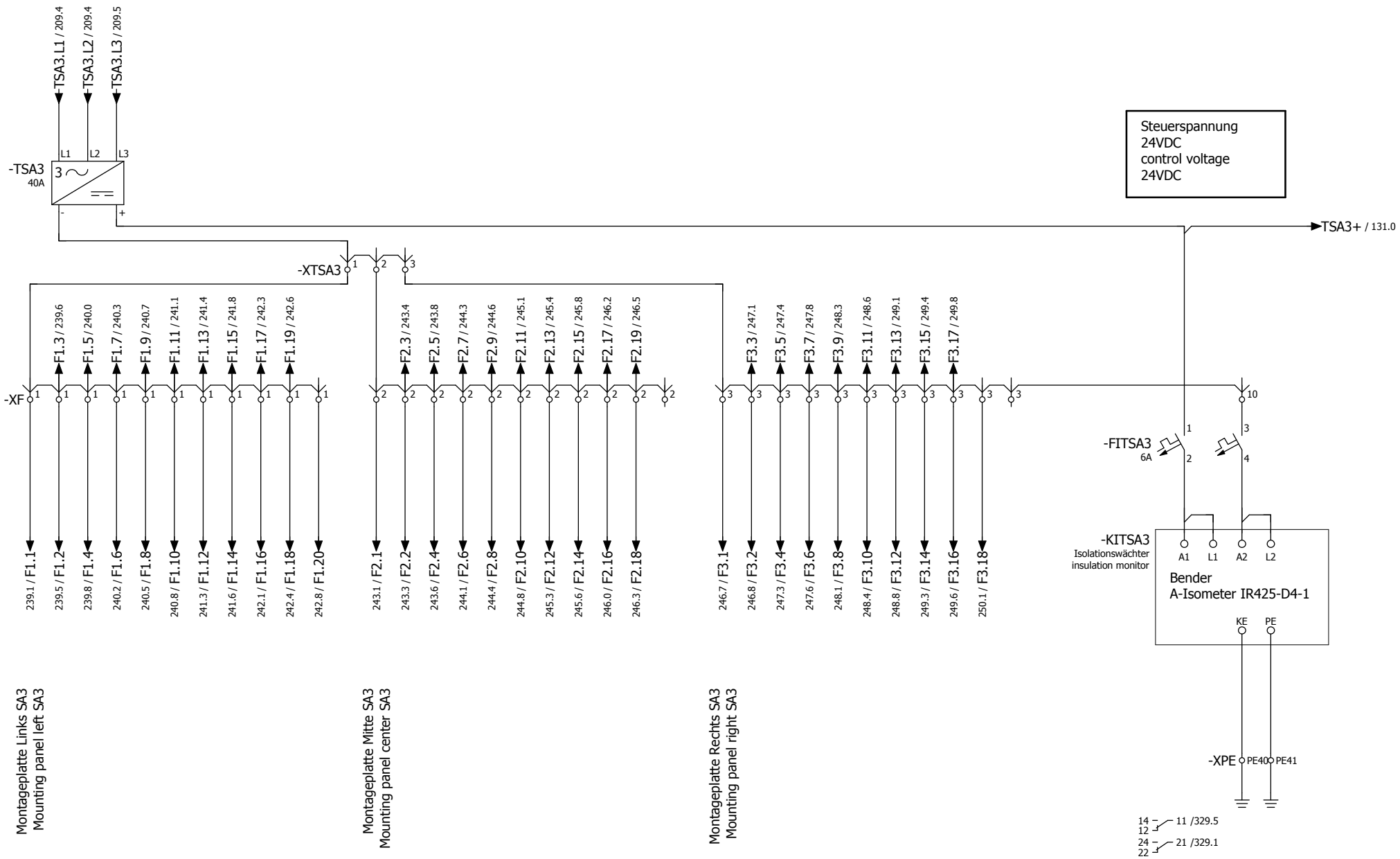

129

Duferco Clabecq

Management codes				Document identification				
5.3.0.0	CE	000	DW	QTPC	L04	ROSL	D	0049
System	Phase	Area	Typology	Project	Lot	Company	D/S	Number

131

Rev.	Date	Description	Prepared	Checked	Approved			
						Date	30.01.2012	
						Dus		
							Duferco (SBM 2) Schaltschrank	
							in place of	Replaced by

RÖSLER finding a better way ...

Control
Power supply unit SA3

= ES
+ S

01-130070 00

Page 130
from 565

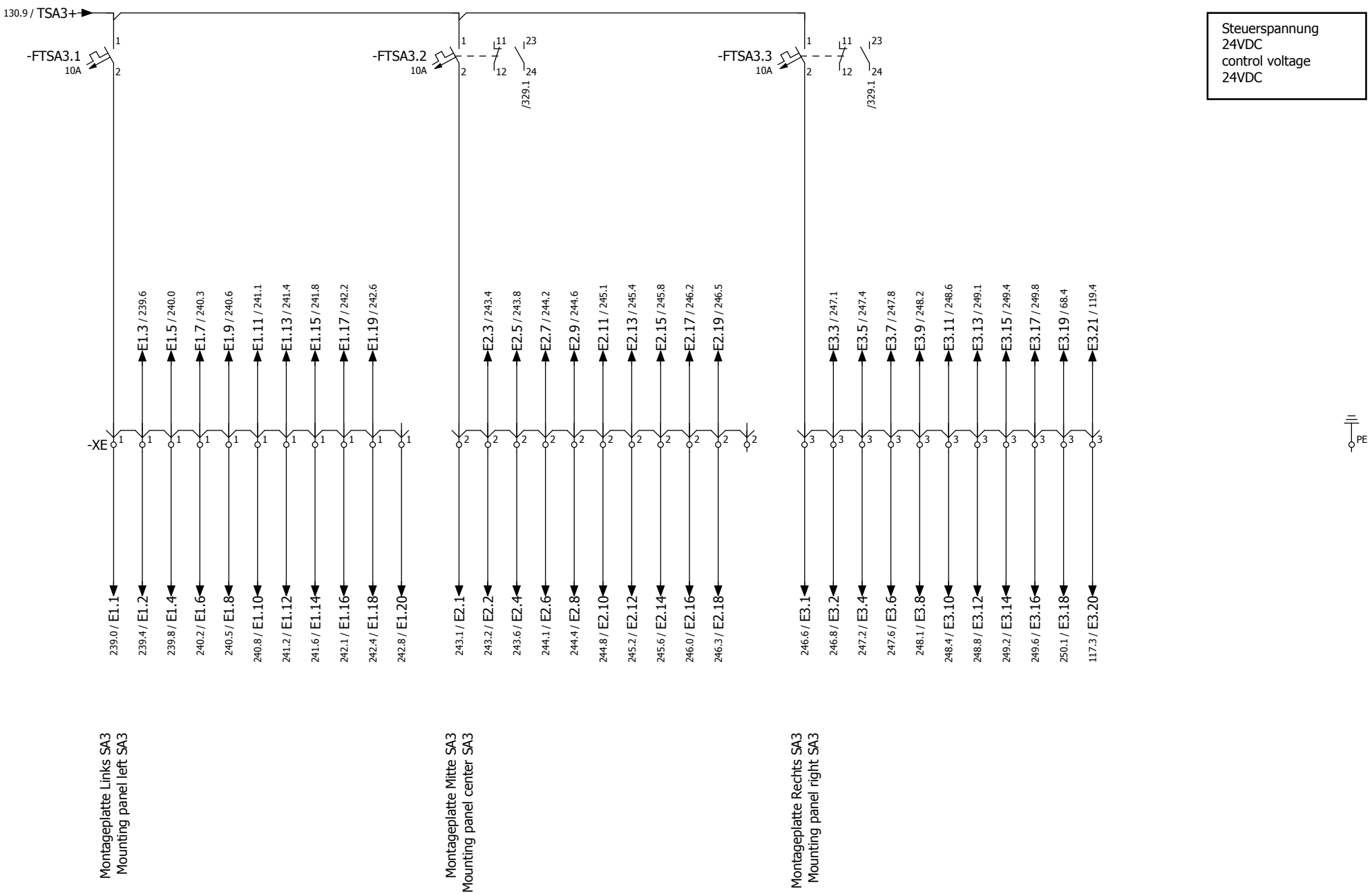

130

132

Management codes				Document identification				
5.3.0.0	CE	000	DW	QTPC	L04	ROSL	D	0049
System	Phase	Area	Typology	Project	Lot	Company	D/S	Number

Duferco Clabecq

Rev.	Date	Description	Prepared	Checked	Approved			
						Date	30.01.2012	
						Dus		
							Duferco (SBM 2) Schaltschrank	
							in place of	Replaced by

RÖSLER finding a better way ...

Control
Power supply unit SA3

= ES
+ S

01-130070 00

Page 131
from 565

Zuleitung
Frequenzumrichter
Auslauf M11 - M16

input lead
frequency converter
outlet M11 - M16

Lüfter
Schaltschrank
ventilator
Enclosure

Duferco Clabecq

Management codes				Document identification				
5.3.0.0	CE	000	DW	QTPC	L04	ROSL	D	0049
System	Phase	Area	Typology	Project	Lot	Company	D/S	Number

131 133

Rev.	Date	Description	Prepared	Checked	Approved			
						Date	30.01.2012	
						Dus		

Duferco (SBM 2) Schaltschrank
in place of | Replaced by

RÖSLER finding a better way ...

load circuit
input lead FU M11 - M16

= ES
+ S

01-130070 00

Page 132
from 565

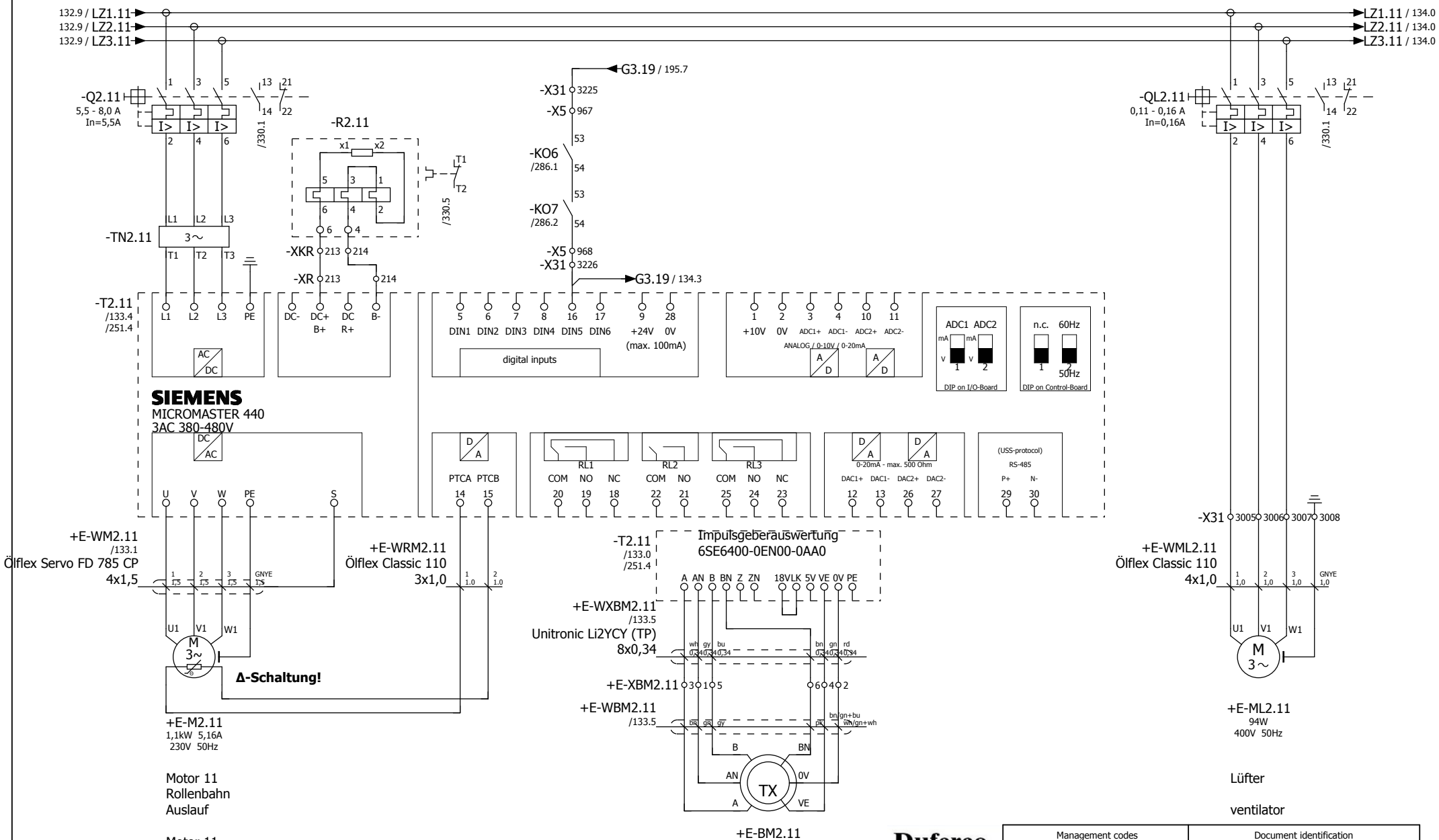

132

134

Management codes				Document identification				
5.3.0.0	CE	000	DW	QTPC	L04	ROSL	D	0049
System	Phase	Area	Typology	Project	Lot	Company	D/S	Number

Duferco Clabecq

						Date	30.01.2012	
						Dus		
Rev.	Date	Description	Prepared	Checked	Approved			

Duferco (SBM 2) Schaltschrank

in place of | Replaced by

RÖSLER finding a better way ...

load circuit
roll conveyor outlet M11

= ES
+ S

01-130070 00

Page 133
from 565

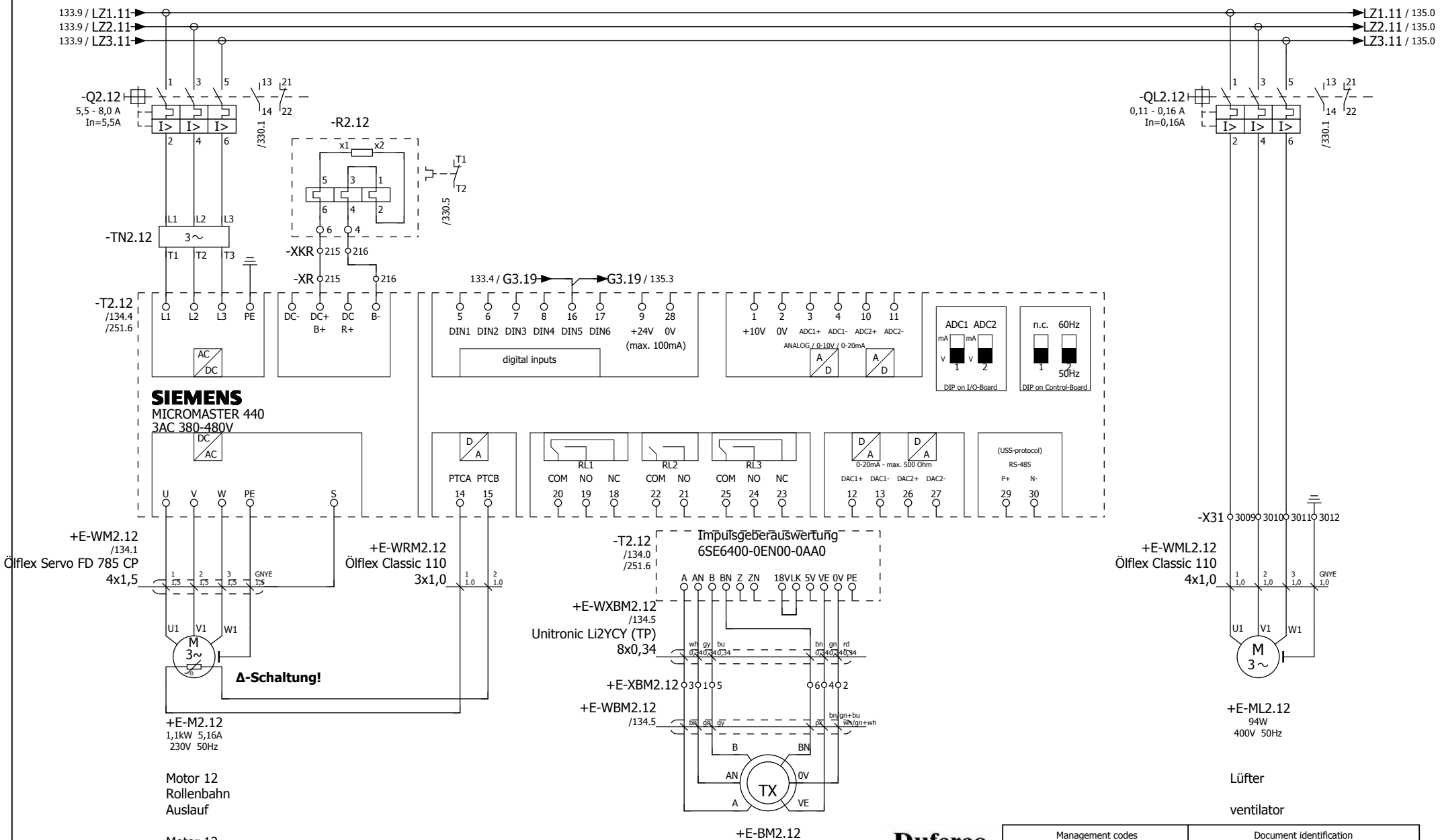

133

135

Management codes				Document identification				
5.3.0.0	CE	000	DW	QTPC	L04	ROSL	D	0049
System	Phase	Area	Typology	Project	Lot	Company	D/S	Number

						Date	30.01.2012	
						Dus		
Rev.	Date	Description	Prepared	Checked	Approved			

Duferco (SBM 2) Schaltschrank

in place of | Replaced by

RÖSLER finding a better way ...

load circuit
roll conveyor outlet M12

= ES
+ S

01-130070 00

Page 134
from 565

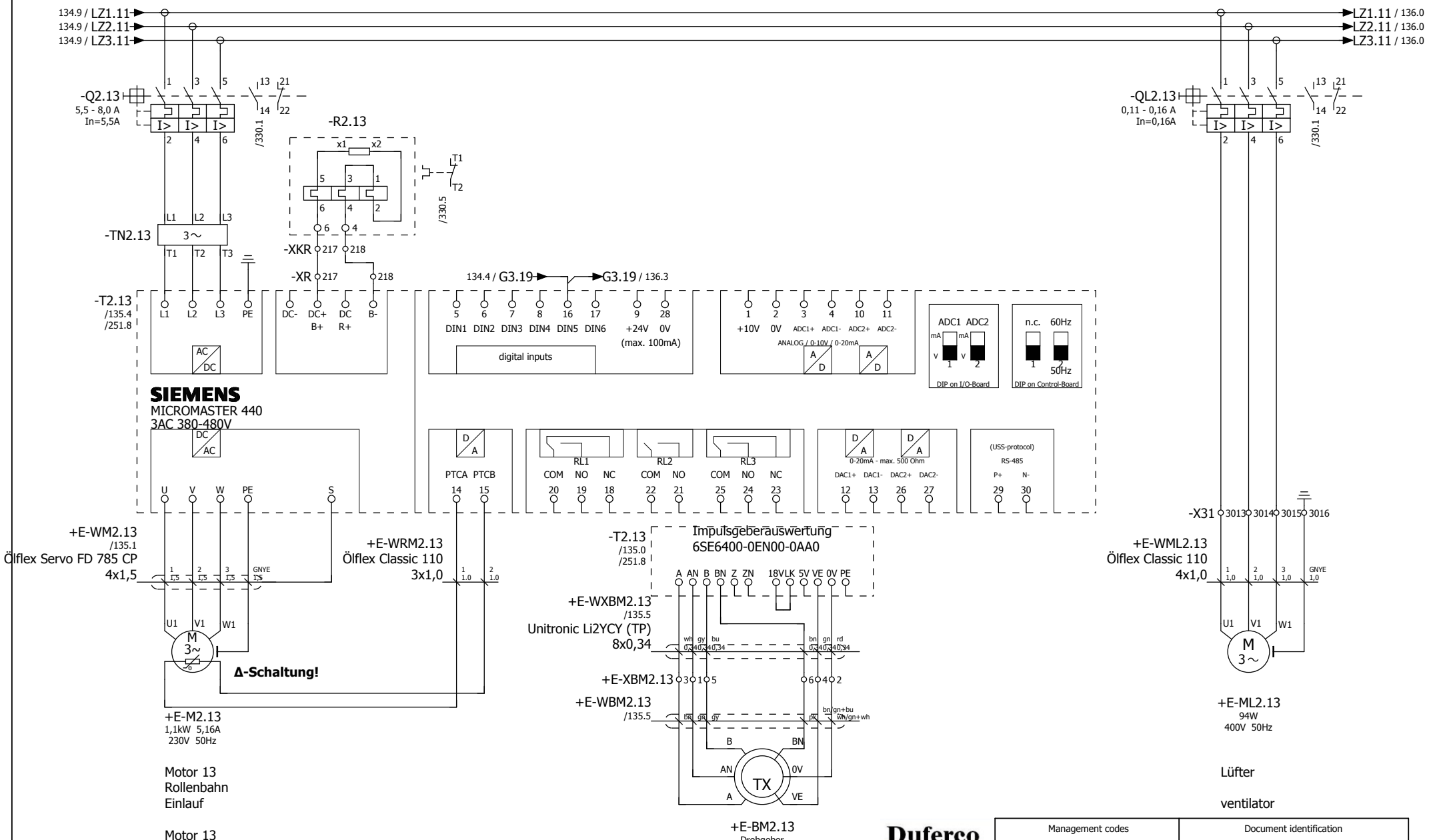

134

136

Duferco Clabecq

Management codes				Document identification				
5.3.0.0	CE	000	DW	QTPC	L04	ROSL	D	0049
System	Phase	Area	Typology	Project	Lot	Company	D/S	Number

						Date	30.01.2012	
						Dus		
Rev.	Date	Description	Prepared	Checked	Approved			

Duferco (SBM 2) Schaltschrank

in place of | Replaced by

RÖSLER finding a better way ...

load circuit
roll conveyor outlet M13

= ES
+ S

01-130070 00

Page 135
from 565

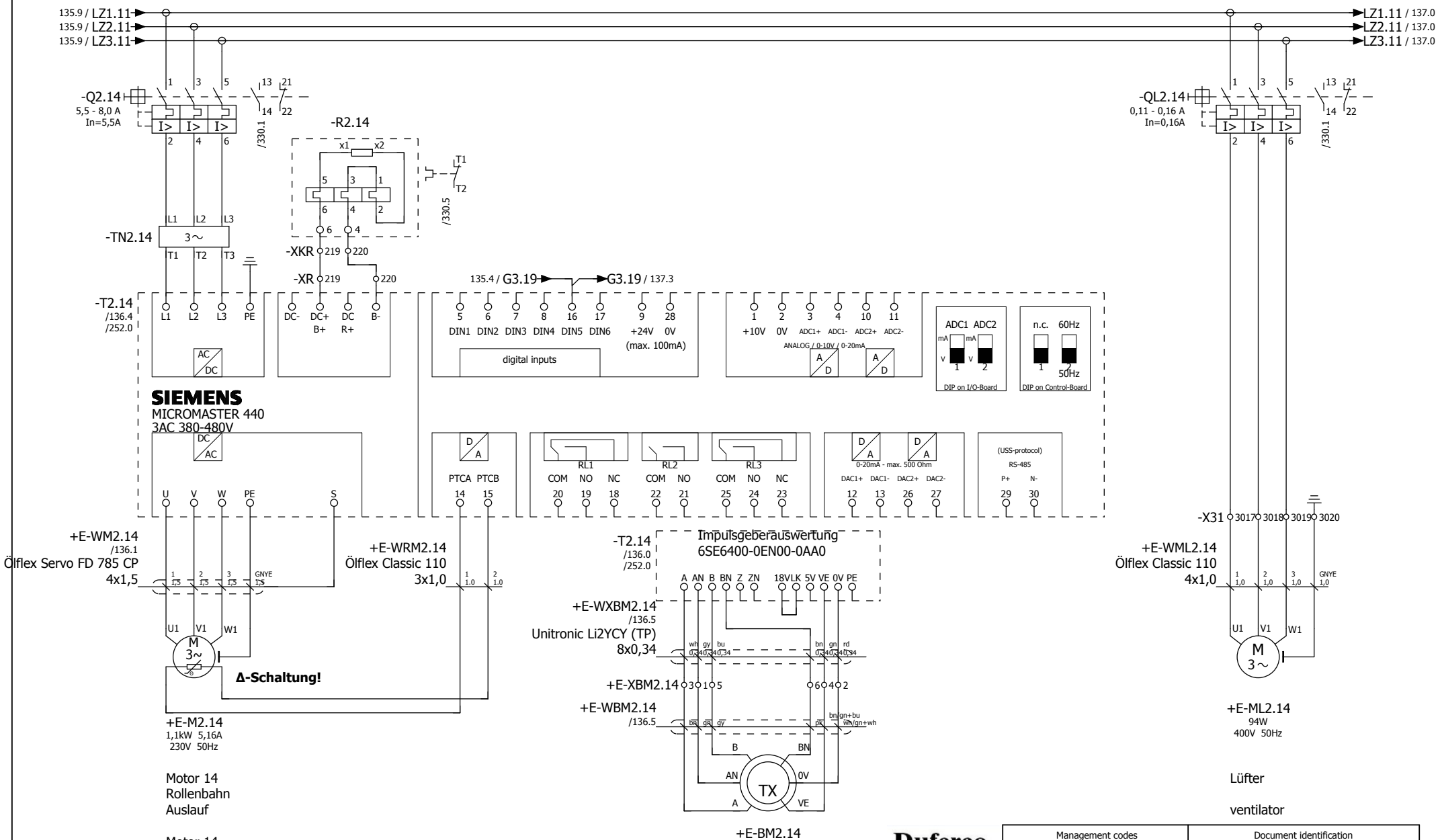

135

137

Duferco Clabecq

Management codes				Document identification				
5.3.0.0	CE	000	DW	QTPC	L04	ROSL	D	0049
System	Phase	Area	Typology	Project	Lot	Company	D/S	Number

Rev.	Date	Description	Prepared	Checked	Approved			
						Date	30.01.2012	
						Dus		

Duferco (SBM 2) Schaltschrank

in place of | Replaced by

RÖSLER finding a better way ...

load circuit
roll conveyor outlet M14

= ES
+ S

01-130070 00

Page 136
from 565

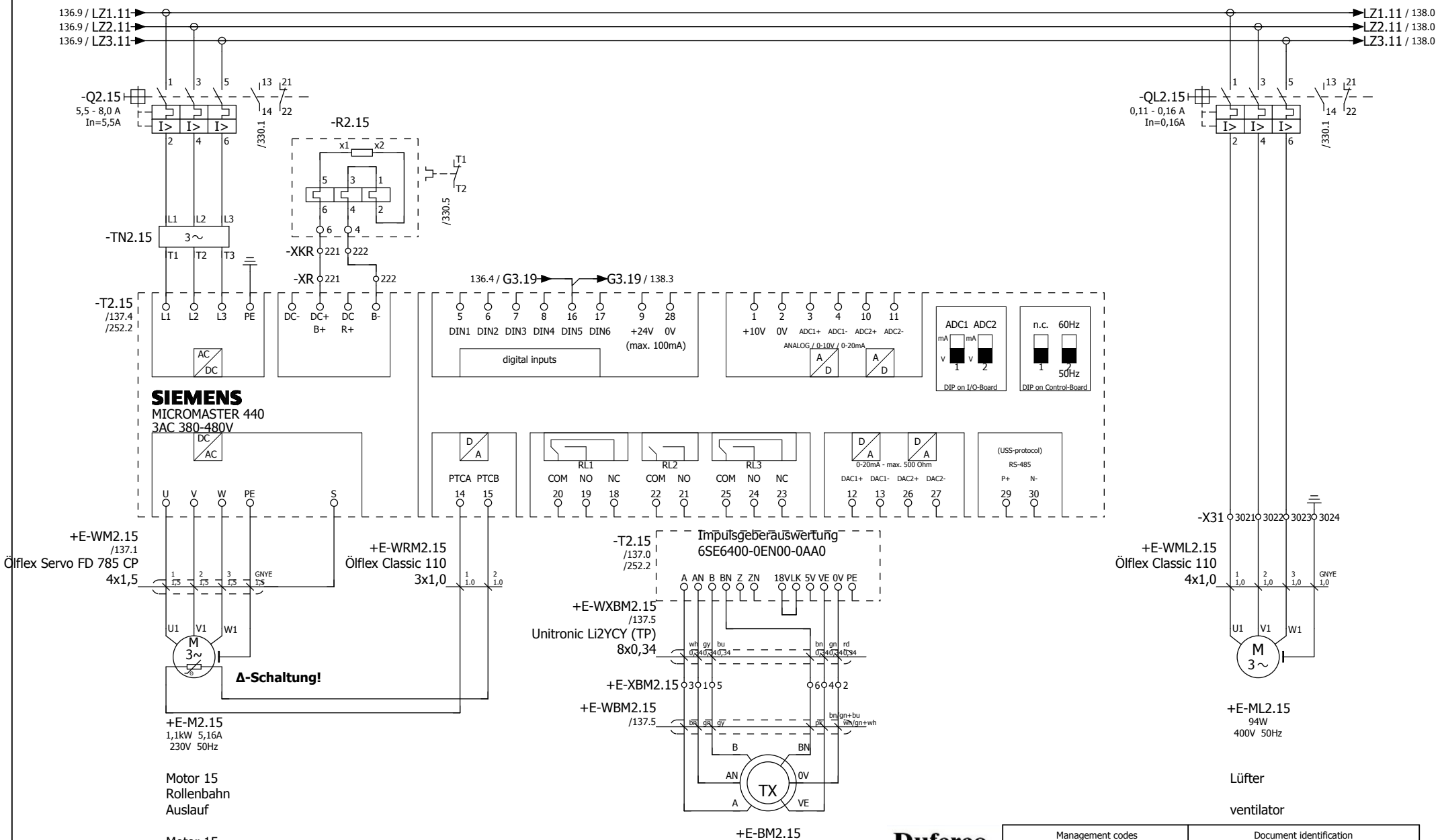

136

138

Duferco Clabecq

Management codes				Document identification				
5.3.0.0	CE	000	DW	QTPC	L04	ROSL	D	0049
System	Phase	Area	Typology	Project	Lot	Company	D/S	Number

						Date	30.01.2012	
						Dus		
Rev.	Date	Description	Prepared	Checked	Approved			

Duferco (SBM 2) Schaltschrank

in place of | Replaced by

RÖSLER finding a better way ...

load circuit
roll conveyor outlet M15

= ES
+ S

01-130070 00

Page 137
from 565

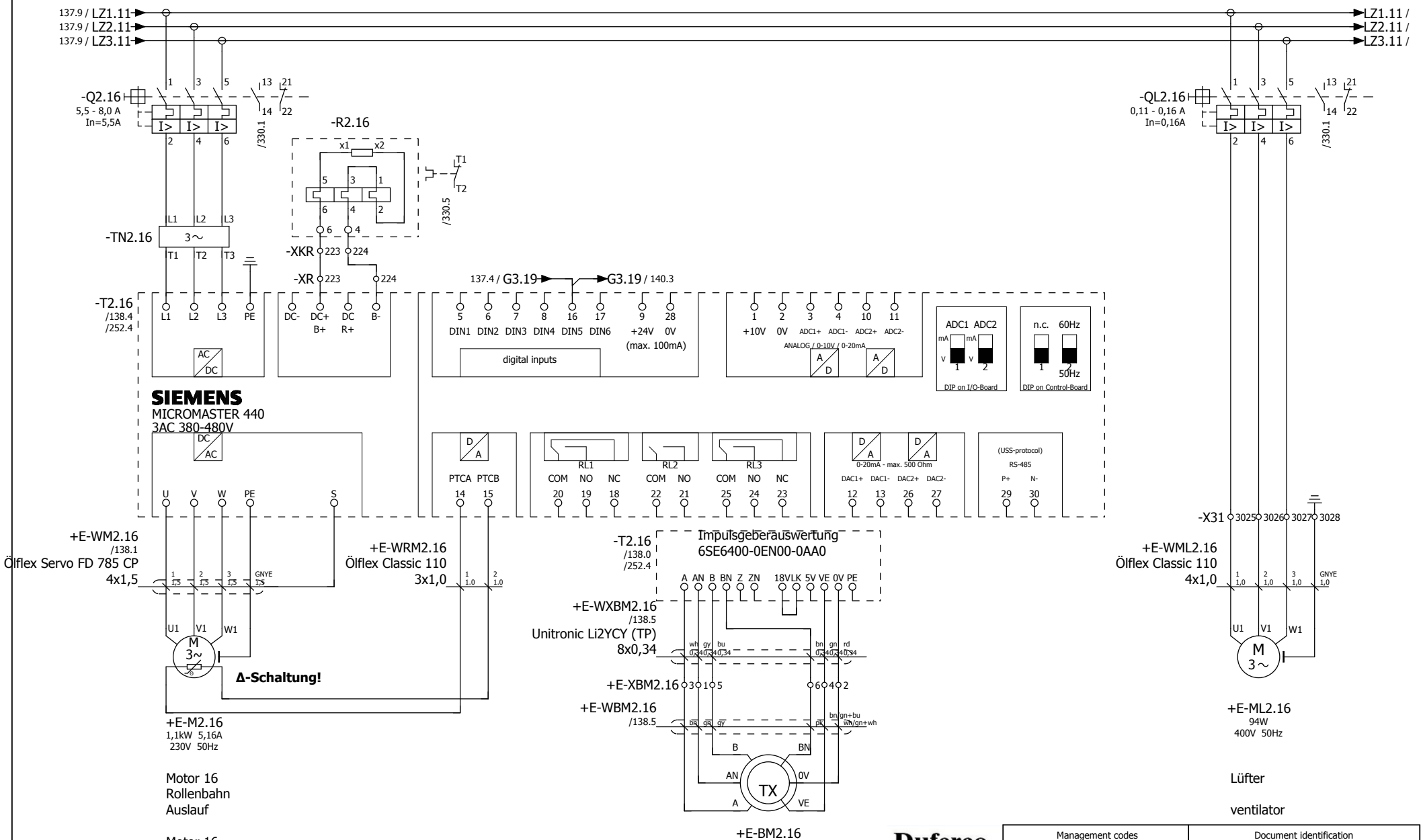

Duferco Clabecq

Management codes				Document identification				
5.3.0.0	CE	000	DW	QTPC	L04	ROSL	D	0049
System	Phase	Area	Typology	Project	Lot	Company	D/S	Number

137 139

						Date	30.01.2012	
						Dus		
Rev.	Date	Description	Prepared	Checked	Approved			

Duferco (SBM 2) Schaltschrank

in place of | Replaced by

RÖSLER finding a better way ...

load circuit
roll conveyor outlet M16

= ES
+ S

01-130070 00

Page 138
from 565

Zuleitung
Frequenzumrichter
Auslauf M17 - M22

input lead
frequency converter
outlet M17 - M22

138

Duferco Clabecq

Management codes				Document identification				
5.3.0.0	CE	000	DW	QTPC	L04	ROSL	D	0049
System	Phase	Area	Typology	Project	Lot	Company	D/S	Number

140

Rev.	Date	Description	Prepared	Checked	Approved			
						Date	30.01.2012	
						Dus		

Duferco (SBM 2) Schaltschrank

in place of | Replaced by

RÖSLER finding a better way ...

load circuit
input lead FU M17 - M22

= ES
+ S

01-130070 00

Page 139
from 565

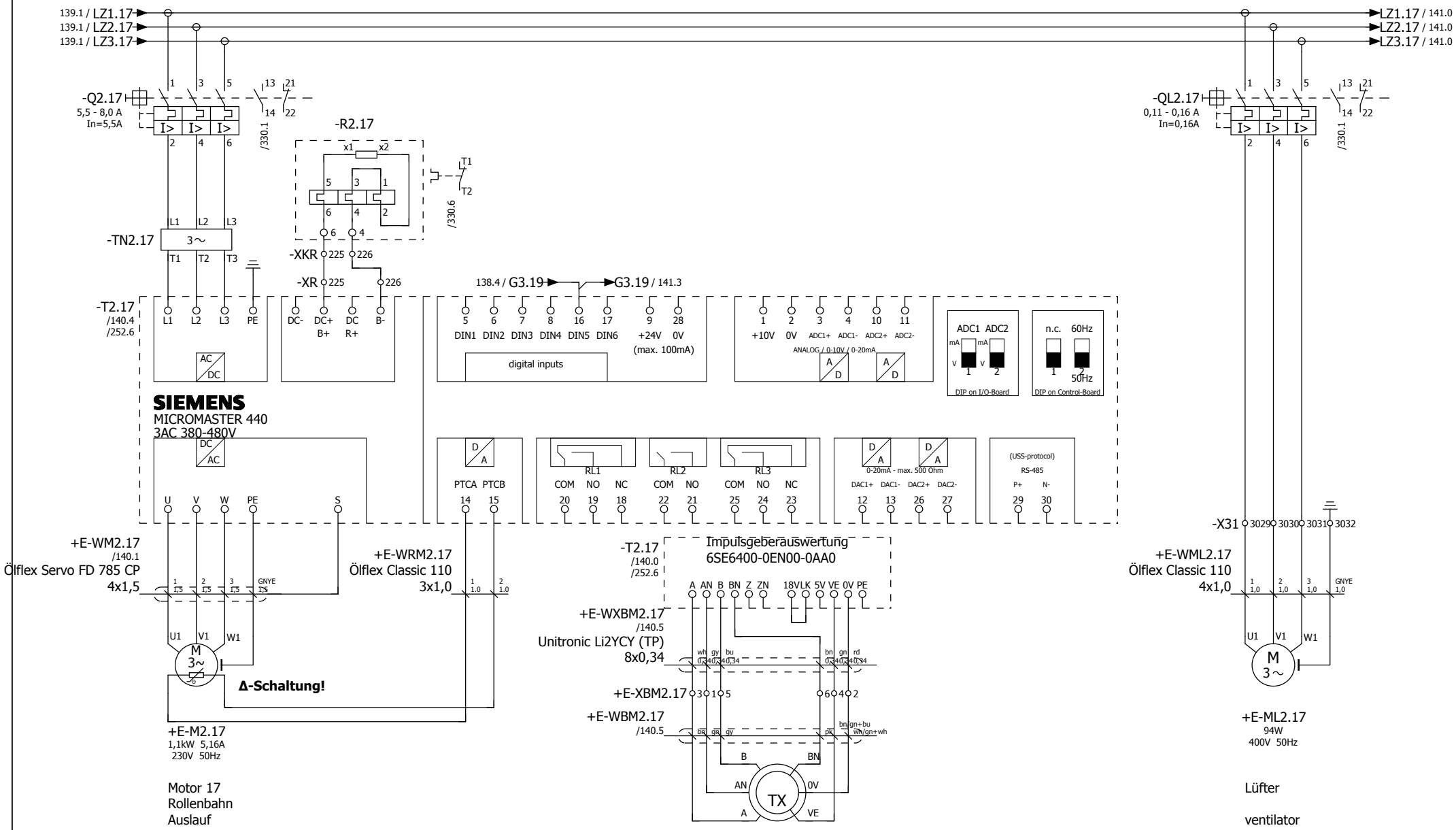

Management codes				Document identification				
5.3.0.0	CE	000	DW	QTPC	L04	ROSL	D	0049
System	Phase	Area	Typology	Project	Lot	Company	D/S	Number

139 141

Rev.	Date	Description	Prepared	Checked	Approved			
						Date	30.01.2012	
						Dus		

Duferco (SBM 2) Schaltschrank

in place of | Replaced by

RÖSLER finding a better way ...

load circuit
roll conveyor outlet M17

= ES
+ S

01-130070 00

Page 140
from 565

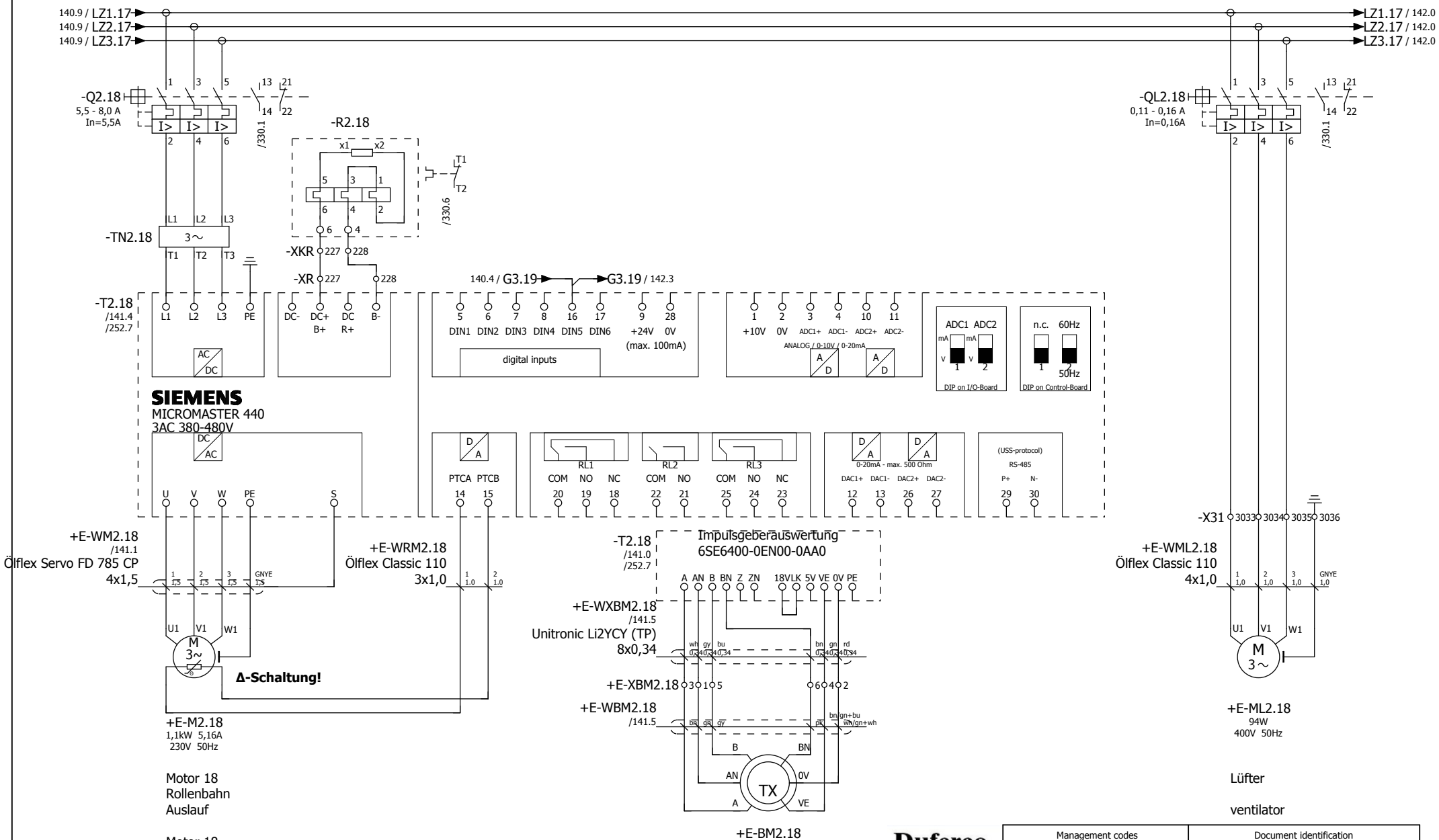

Management codes				Document identification				
5.3.0.0	CE	000	DW	QTPC	L04	ROSL	D	0049
System	Phase	Area	Typology	Project	Lot	Company	D/S	Number

Duferco Clabecq

140 142

Rev.	Date	Description	Prepared	Checked	Approved			
						Date	30.01.2012	
						Dus		

Duferco (SBM 2) Schaltschrank

in place of | Replaced by

RÖSLER finding a better way ...

load circuit
roll conveyor outlet M18

= ES
+ S

01-130070 00

Page 141
from 565

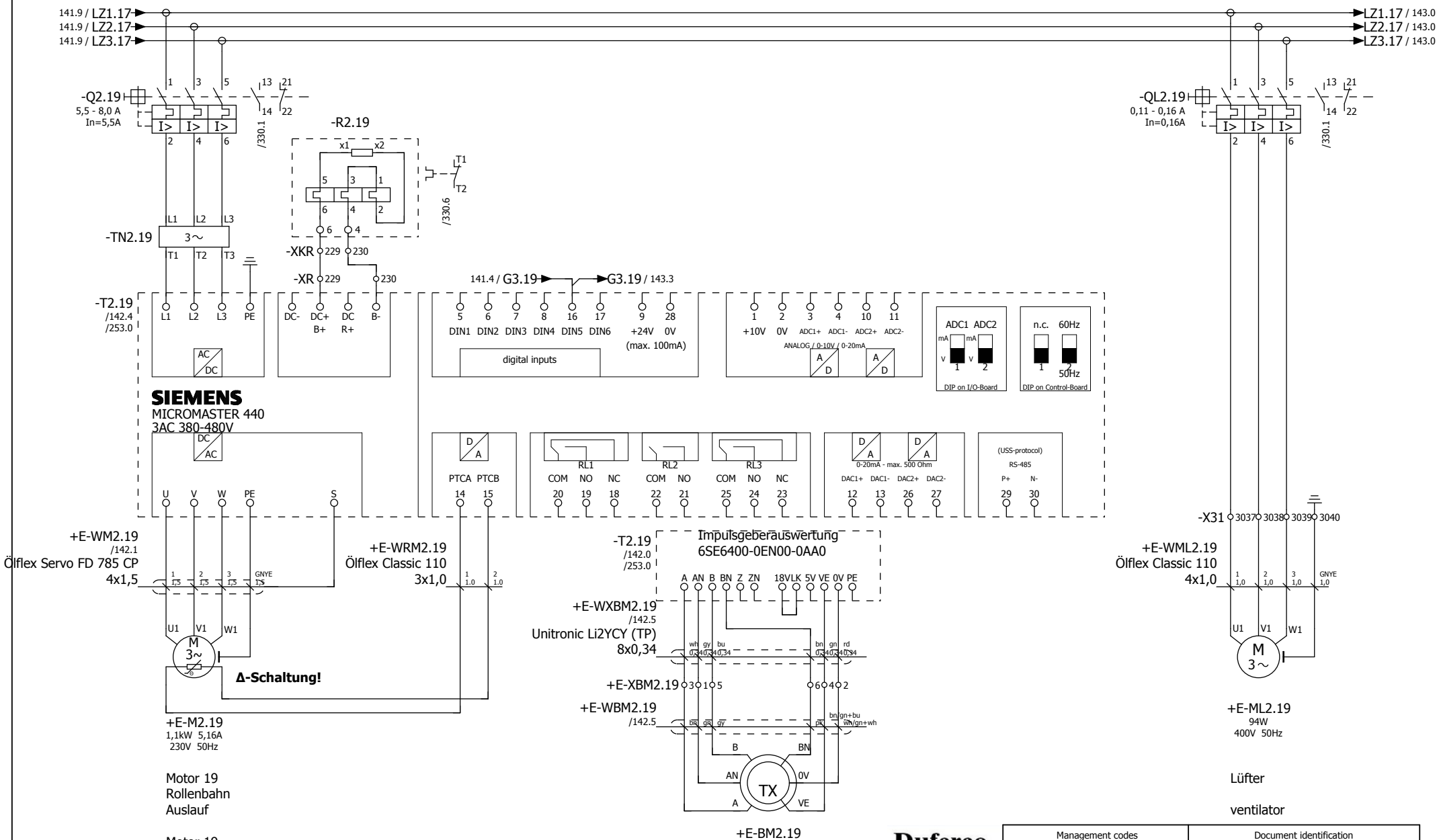

141

143

Duferco Clabecq

Management codes				Document identification				
5.3.0.0	CE	000	DW	QTPC	L04	ROSL	D	0049
System	Phase	Area	Typology	Project	Lot	Company	D/S	Number

						Date	30.01.2012	
						Dus		
Rev.	Date	Description	Prepared	Checked	Approved			

Duferco (SBM 2) Schaltschrank

in place of | Replaced by

RÖSLER finding a better way ...

load circuit
roll conveyor outlet M19

= ES
+ S

01-130070 00

Page 142
from 565

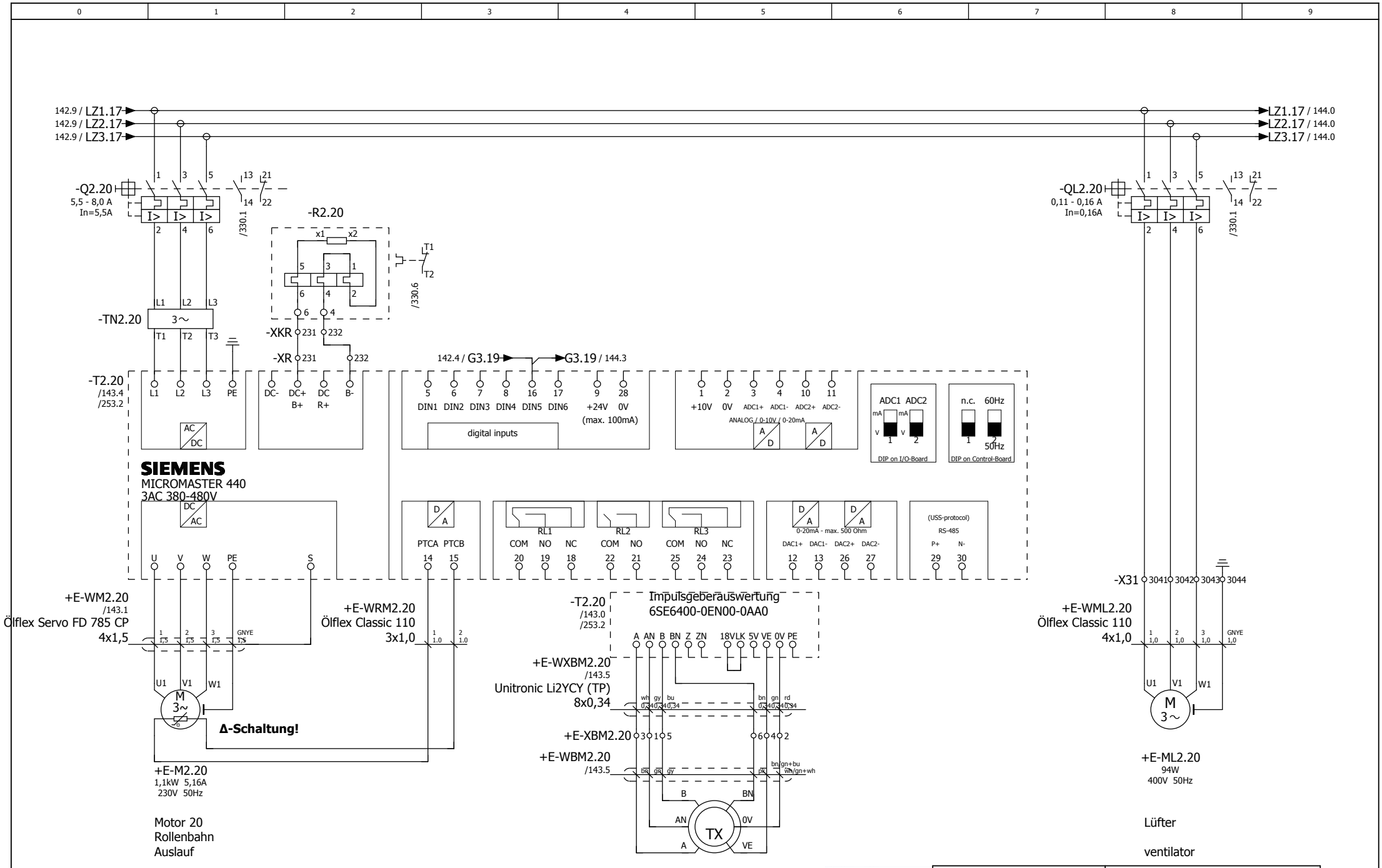

142

144

Management codes				Document identification				
5.3.0.0	CE	000	DW	QTPC	L04	ROSL	D	0049
System	Phase	Area	Typology	Project	Lot	Company	D/S	Number

						Date	30.01.2012	
						Dus		
Rev.	Date	Description	Prepared	Checked	Approved			

Duferco (SBM 2) Schaltschrank

in place of | Replaced by

RÖSLER finding a better way ...

load circuit
roll conveyor outlet M20

= ES
+ S

01-130070 00

Page 143
from 565

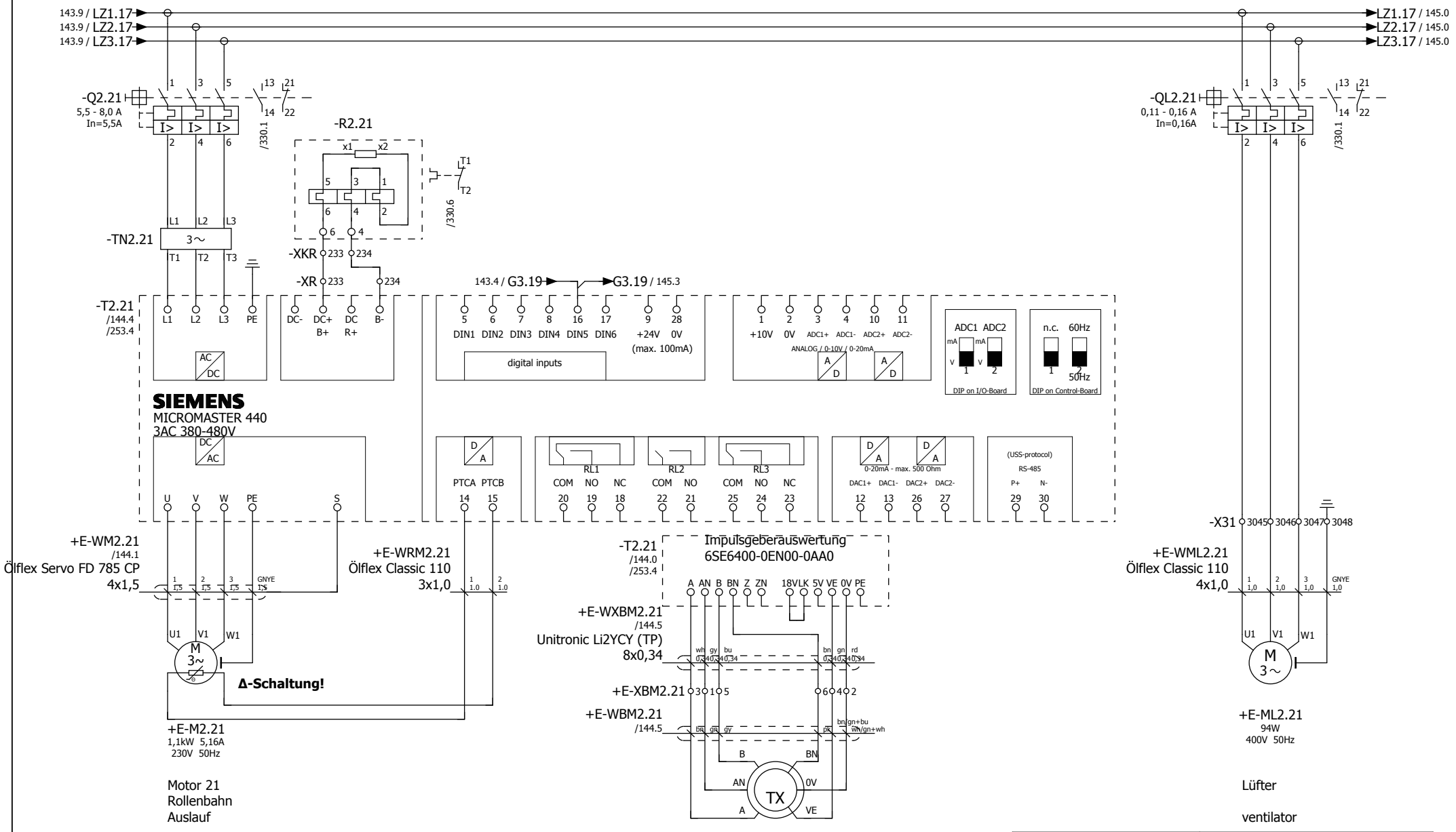

143

145

Management codes				Document identification				
5.3.0.0	CE	000	DW	QTPC	L04	ROSL	D	0049
System	Phase	Area	Typology	Project	Lot	Company	D/S	Number

Duferco Clabecq

Rev.	Date	Description	Prepared	Checked	Approved			
						Date	30.01.2012	
						Dus		

Duferco (SBM 2) Schaltschrank

in place of | Replaced by

RÖSLER finding a better way ...

load circuit
roll conveyor outlet M21

= ES
+ S

01-130070 00

Page 144
from 565

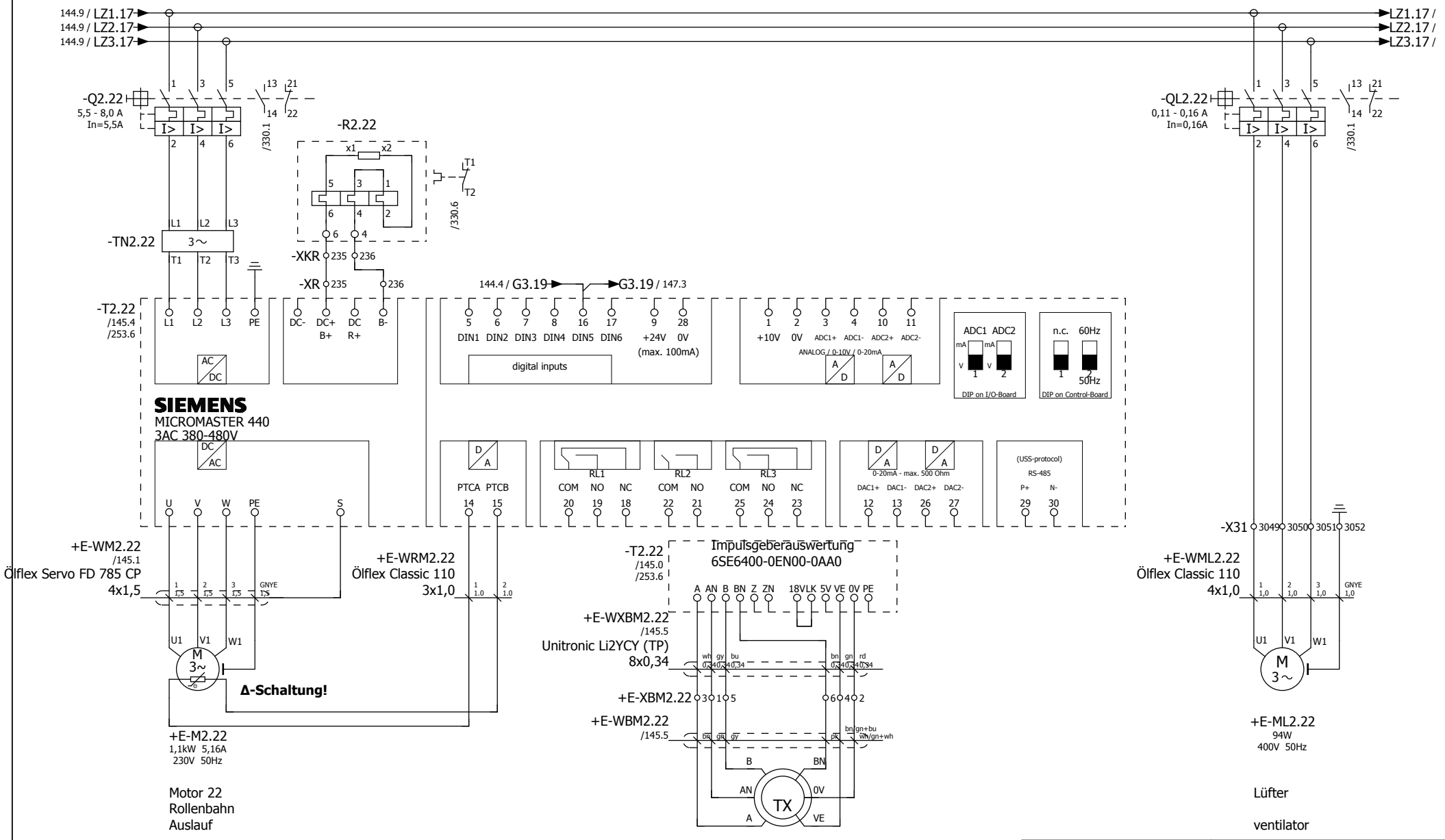

144

146

Management codes				Document identification				
5.3.0.0	CE	000	DW	QTPC	L04	ROSL	D	0049
System	Phase	Area	Typology	Project	Lot	Company	D/S	Number

Duferco Clabecq

Rev.	Date	Description	Prepared	Checked	Approved			
						Date	30.01.2012	
						Dus		

Duferco (SBM 2) Schaltschrank

in place of | Replaced by

RÖSLER finding a better way ...

load circuit
roll conveyor outlet M22

= ES
+ S

01-130070 00

Page 145
from 565

Zuleitung
Frequenzumrichter
Auslauf M23 - M28

input lead
frequency converter
outlet M23 - M28

Duferco Clabecq

Management codes				Document identification				
5.3.0.0	CE	000	DW	QTPC	L04	ROSL	D	0049
System	Phase	Area	Typology	Project	Lot	Company	D/S	Number

145 147

Rev.	Date	Description	Prepared	Checked	Approved	Date 30.01.2012 Dus	Duferco (SBM 2) Schaltschrank	RÖSLER finding a better way ...	load circuit input lead FU M23 - M28	= ES + S	01-130070 00	Page 146 from 565
							in place of	Replaced by				

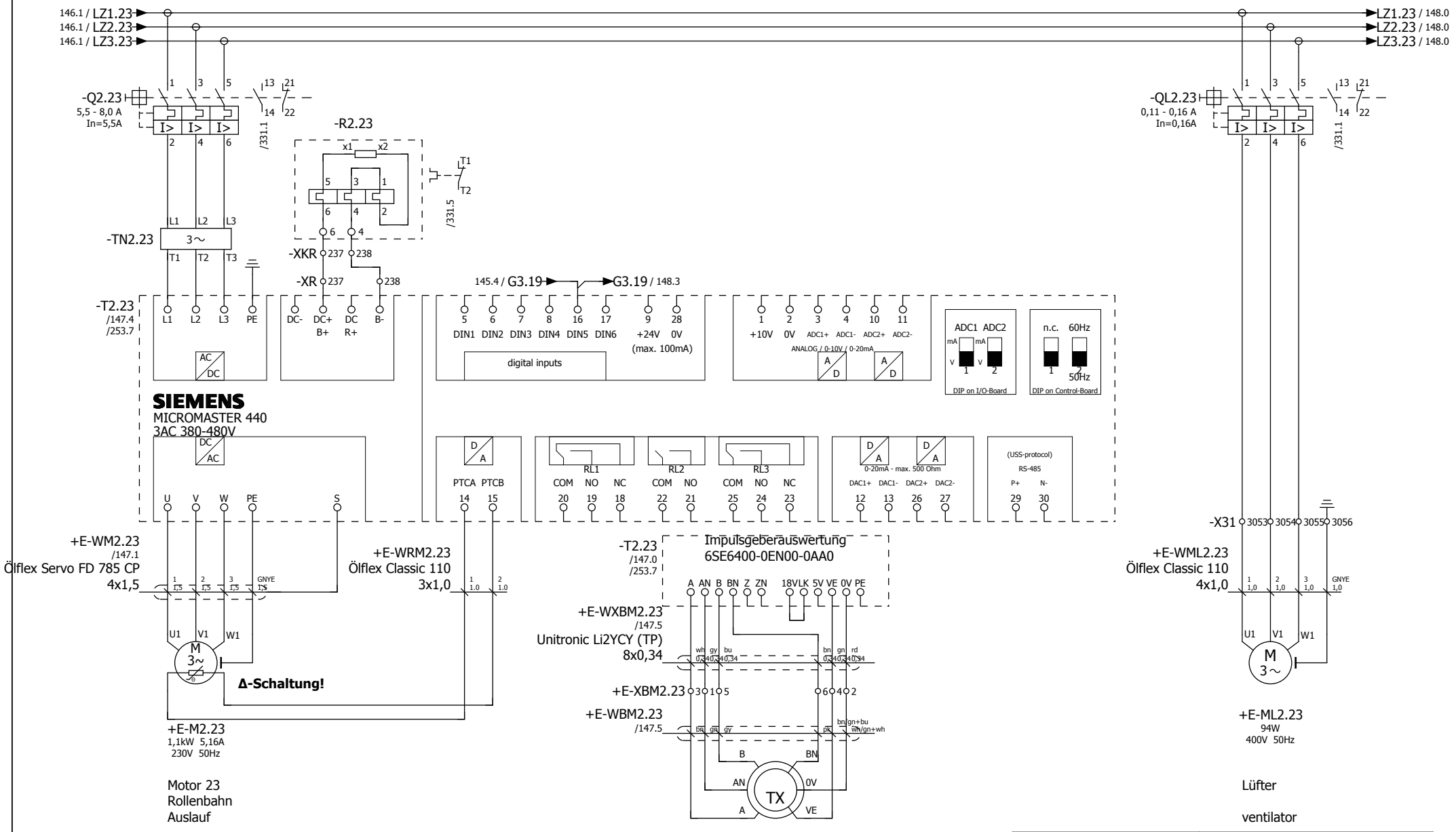

146

148

Management codes				Document identification				
5.3.0.0	CE	000	DW	QTPC	L04	ROSL	D	0049
System	Phase	Area	Typology	Project	Lot	Company	D/S	Number

Duferco Clabecq

Rev.	Date	Description	Prepared	Checked	Approved			
						Date	30.01.2012	
						Dus		

Duferco (SBM 2) Schaltschrank

in place of | Replaced by

RÖSLER finding a better way ...

load circuit
roll conveyor outlet M23

= ES
+ S

01-130070 00

Page 147
from 565

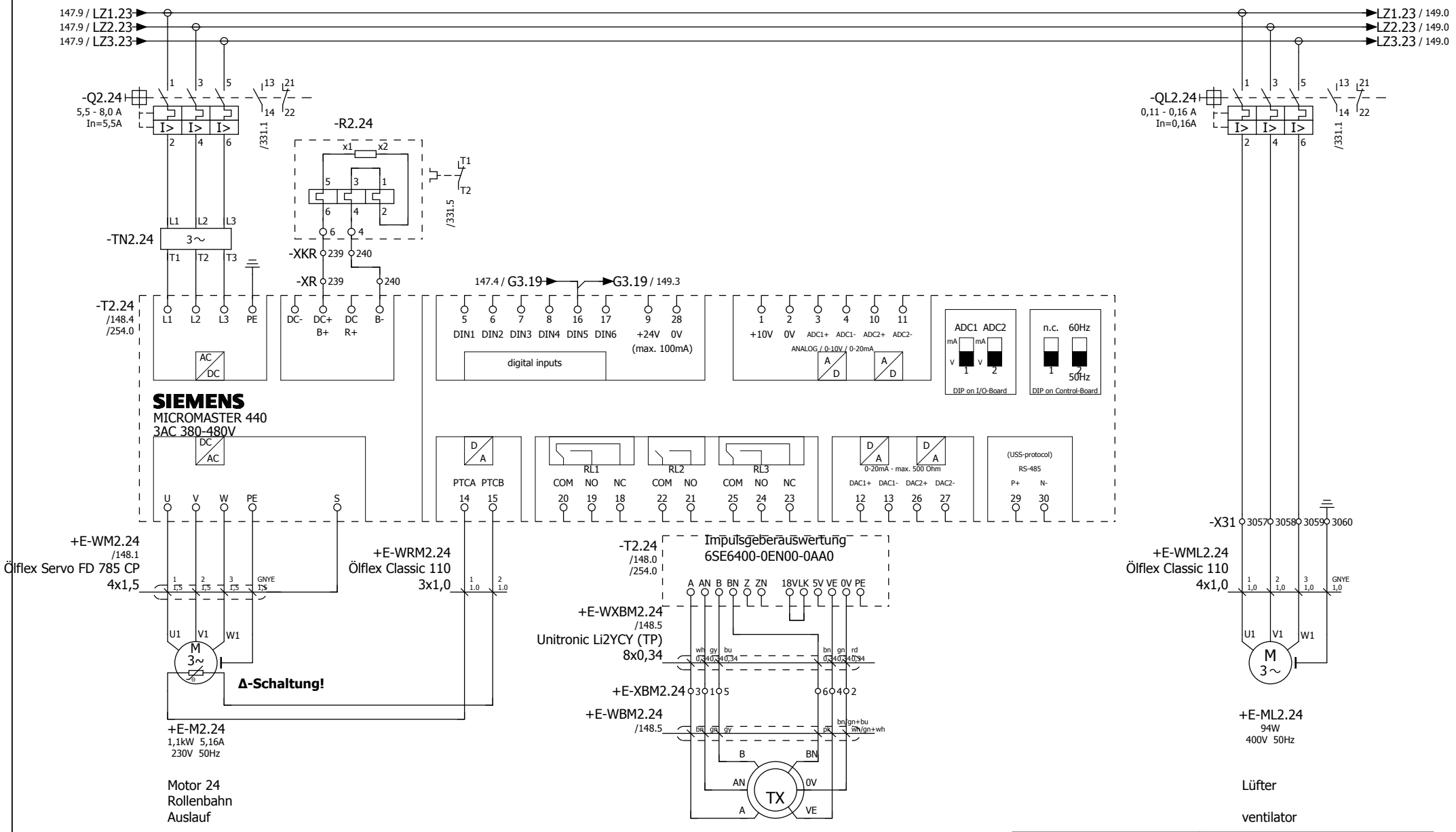

147

149

Duferco Clabecq

Management codes				Document identification				
5.3.0.0	CE	000	DW	QTPC	L04	ROSL	D	0049
System	Phase	Area	Typology	Project	Lot	Company	D/S	Number

						Date	30.01.2012	Duferco (SBM 2) Schaltschrank	
						Dus			
Rev.	Date	Description	Prepared	Checked	Approved			in place of	Replaced by

RÖSLER finding a better way ...

load circuit
roll conveyor outlet M24

= ES
+ S

01-130070 00

Page 148
from 565

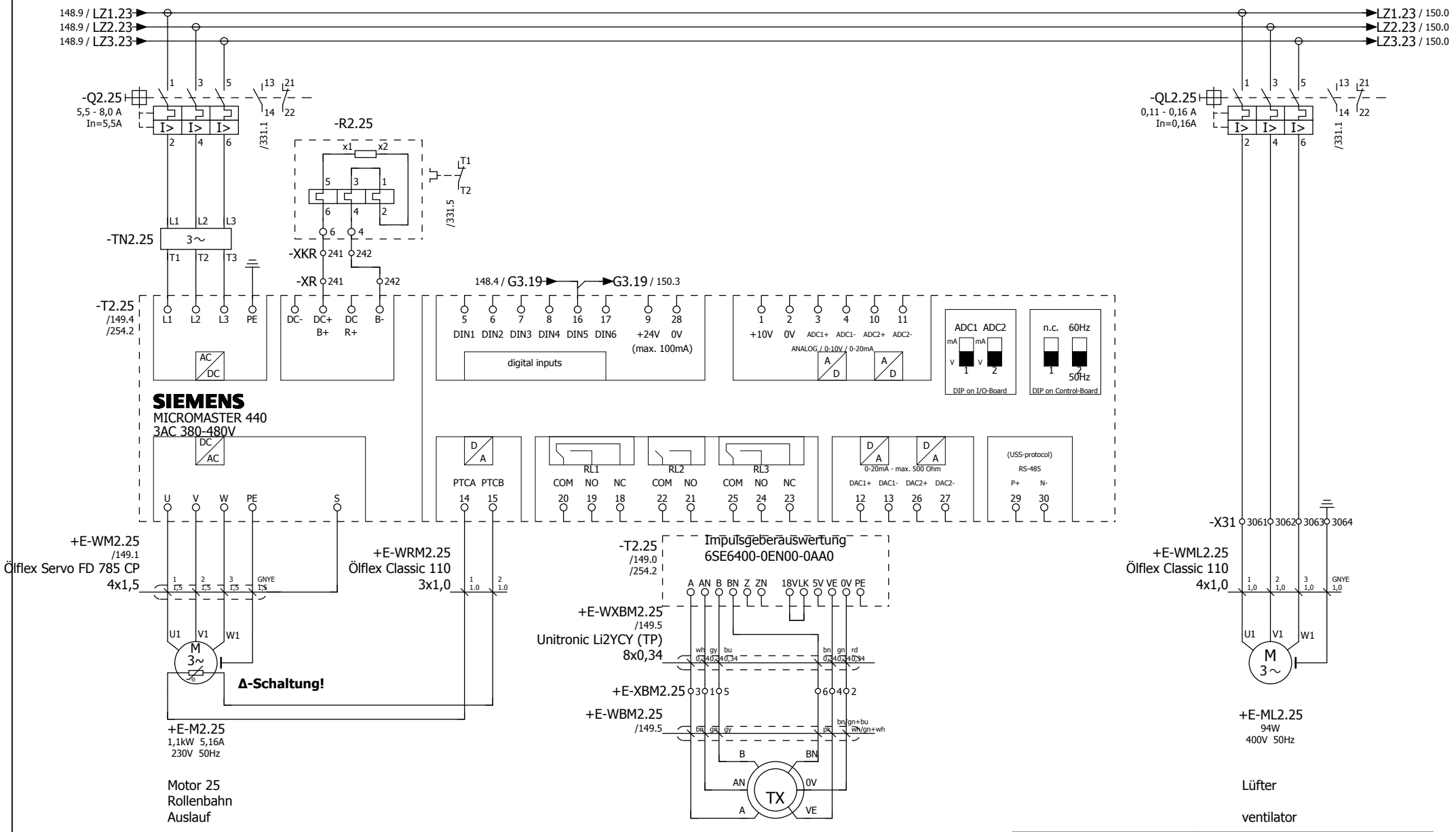

148

150

Management codes				Document identification				
5.3.0.0	CE	000	DW	QTPC	L04	ROSL	D	0049
System	Phase	Area	Typology	Project	Lot	Company	D/S	Number

Duferco Clabecq

Rev.	Date	Description	Prepared	Checked	Approved			
						Date	30.01.2012	
						Dus		

Duferco (SBM 2) Schaltschrank

in place of | Replaced by

RÖSLER finding a better way ...

load circuit
roll conveyor outlet M25

= ES
+ S

01-130070 00

Page 149
from 565

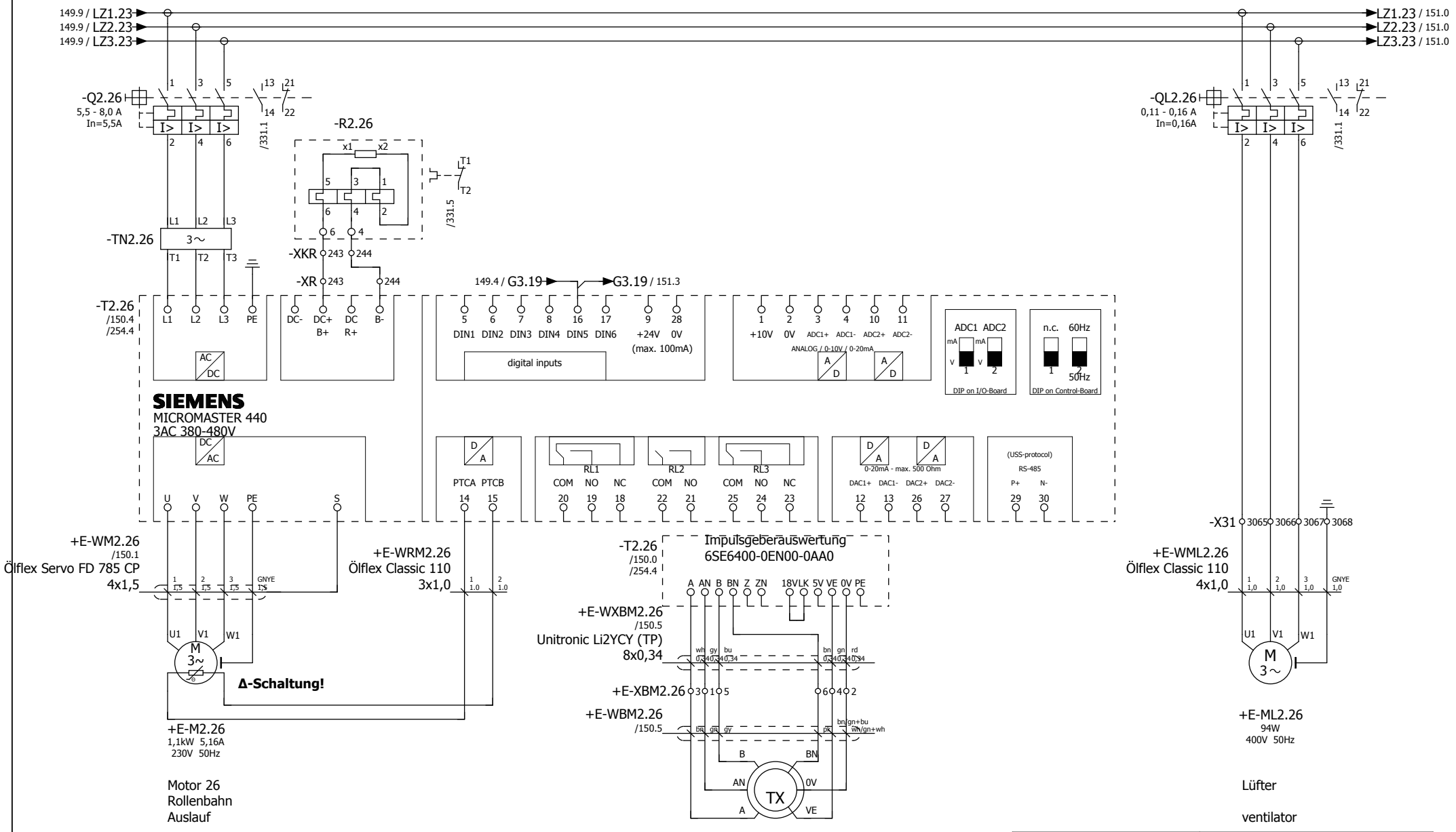

149

151

Management codes				Document identification				
5.3.0.0	CE	000	DW	QTPC	L04	ROSL	D	0049
System	Phase	Area	Typology	Project	Lot	Company	D/S	Number

Duferco Clabecq

Rev.	Date	Description	Prepared	Checked	Approved			
						Date	30.01.2012	
						Dus		

Duferco (SBM 2) Schaltschrank

in place of | Replaced by

RÖSLER finding a better way ...

load circuit
roll conveyor outlet M26

= ES
+ S

01-130070 00

Page 150
from 565

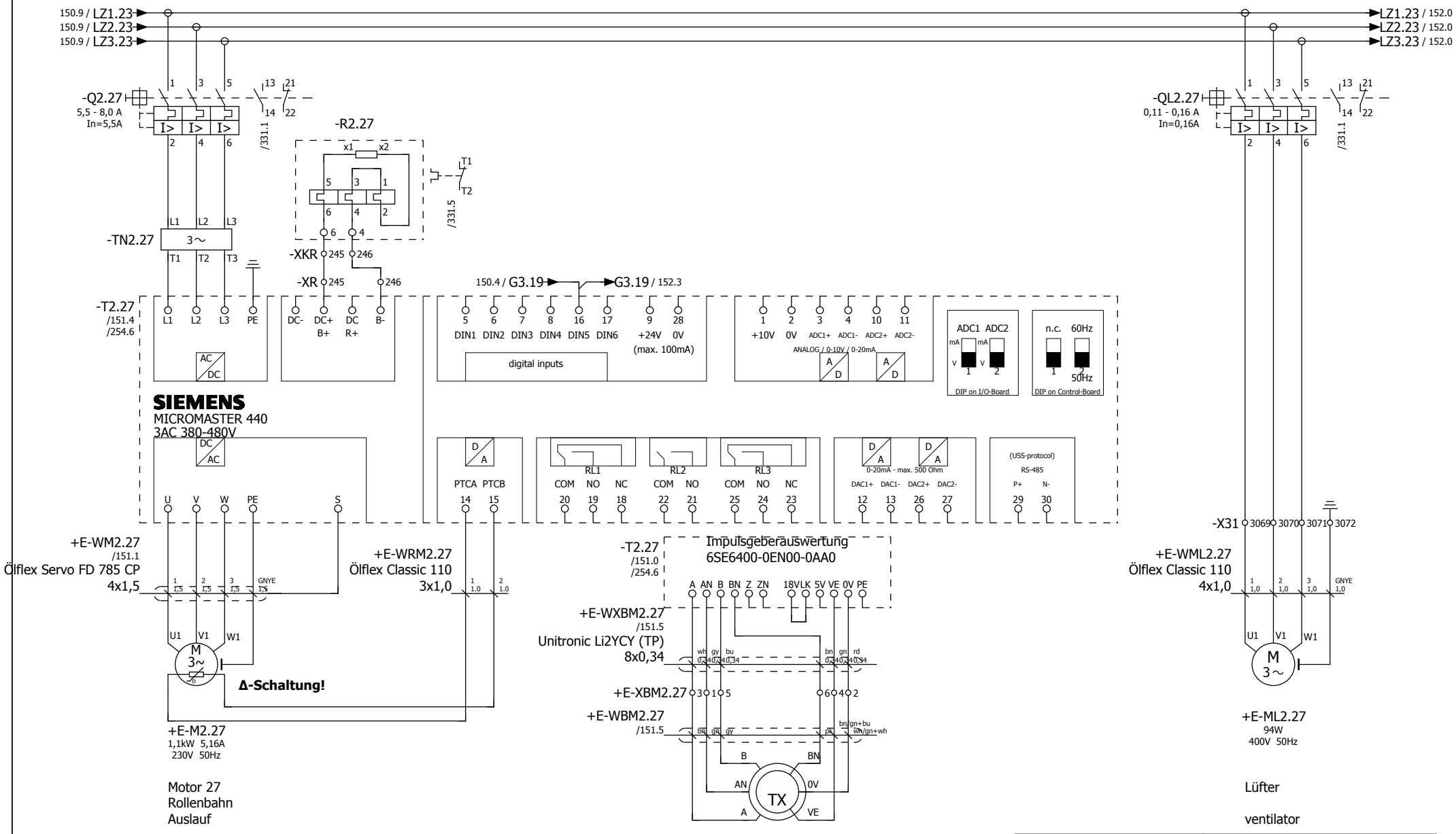

150

152

Management codes				Document identification				
5.3.0.0	CE	000	DW	QTPC	L04	ROSL	D	0049
System	Phase	Area	Typology	Project	Lot	Company	D/S	Number

						Date	30.01.2012	
						Dus		
Rev.	Date	Description	Prepared	Checked	Approved			

Duferco (SBM 2) Schaltschrank

in place of | Replaced by

RÖSLER finding a better way ...

load circuit
roll conveyor outlet M27

= ES
+ S

01-130070 00

Page 151
from 565

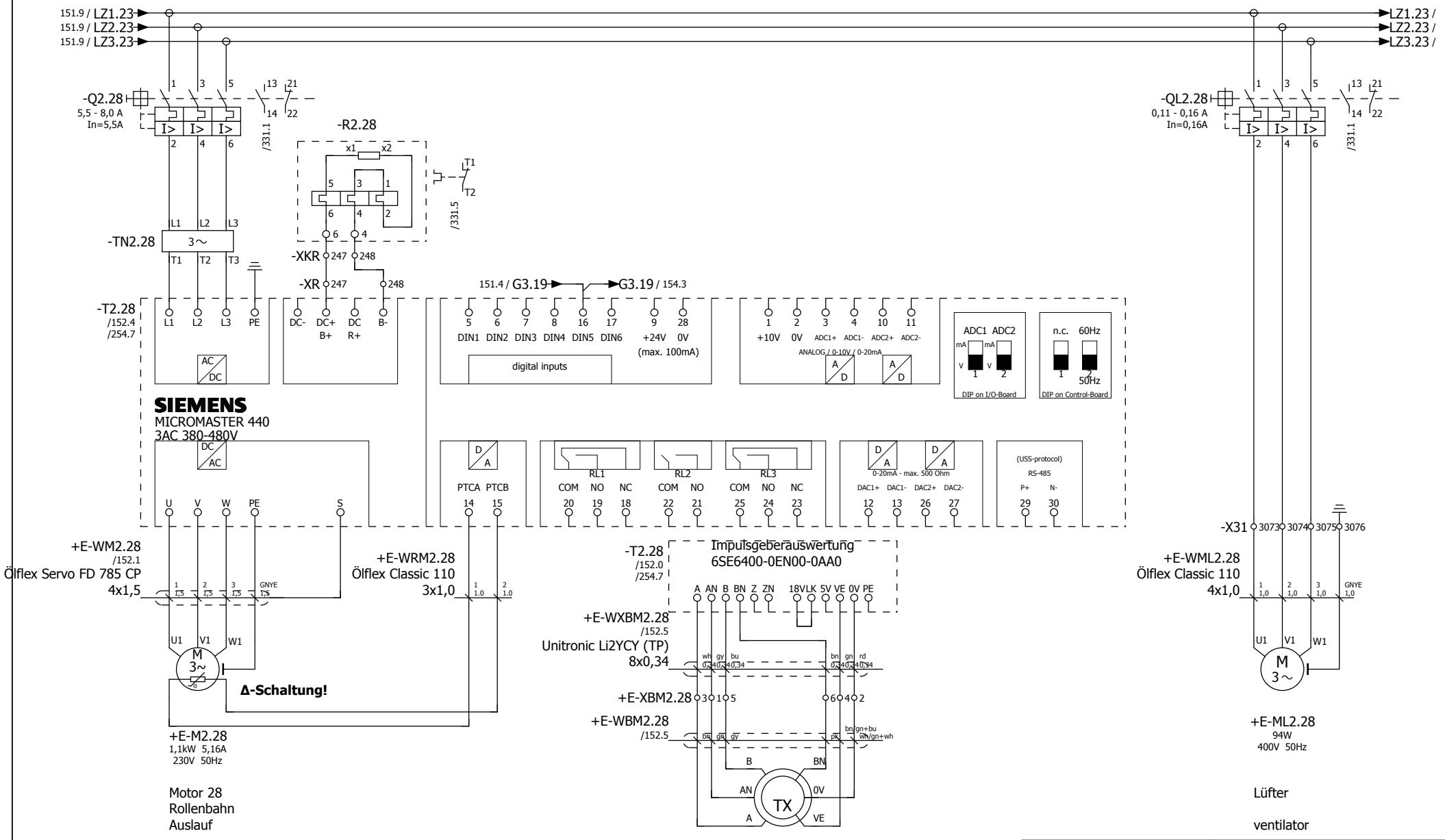

151

153

Duferco Clabecq

Management codes				Document identification				
5.3.0.0	CE	000	DW	QTPC	L04	ROSL	D	0049
System	Phase	Area	Typology	Project	Lot	Company	D/S	Number

						Date	30.01.2012	
						Dus		
Rev.	Date	Description	Prepared	Checked	Approved			

Duferco (SBM 2) Schaltschrank

in place of | Replaced by

RÖSLER finding a better way ...

load circuit
roll conveyor outlet M28

= ES
+ S

01-130070 00

Page 152
from 565

Zuleitung
Frequenzumrichter
Auslauf M29 - M34

input lead
frequency converter
outlet M29 - M34

Lüfter
Schaltschrank
ventilator
Enclosure

152

154

Duferco Clabecq

Management codes				Document identification				
5.3.0.0	CE	000	DW	QTPC	L04	ROSL	D	0049
System	Phase	Area	Typology	Project	Lot	Company	D/S	Number

						Date	30.01.2012	
						Dus		
Rev.	Date	Description	Prepared	Checked	Approved			

Duferco (SBM 2) Schaltschrank

in place of | Replaced by

RÖSLER finding a better way ...

load circuit
input lead FU M29 - M34

= ES
+ S

01-130070 00

Page 153
from 565

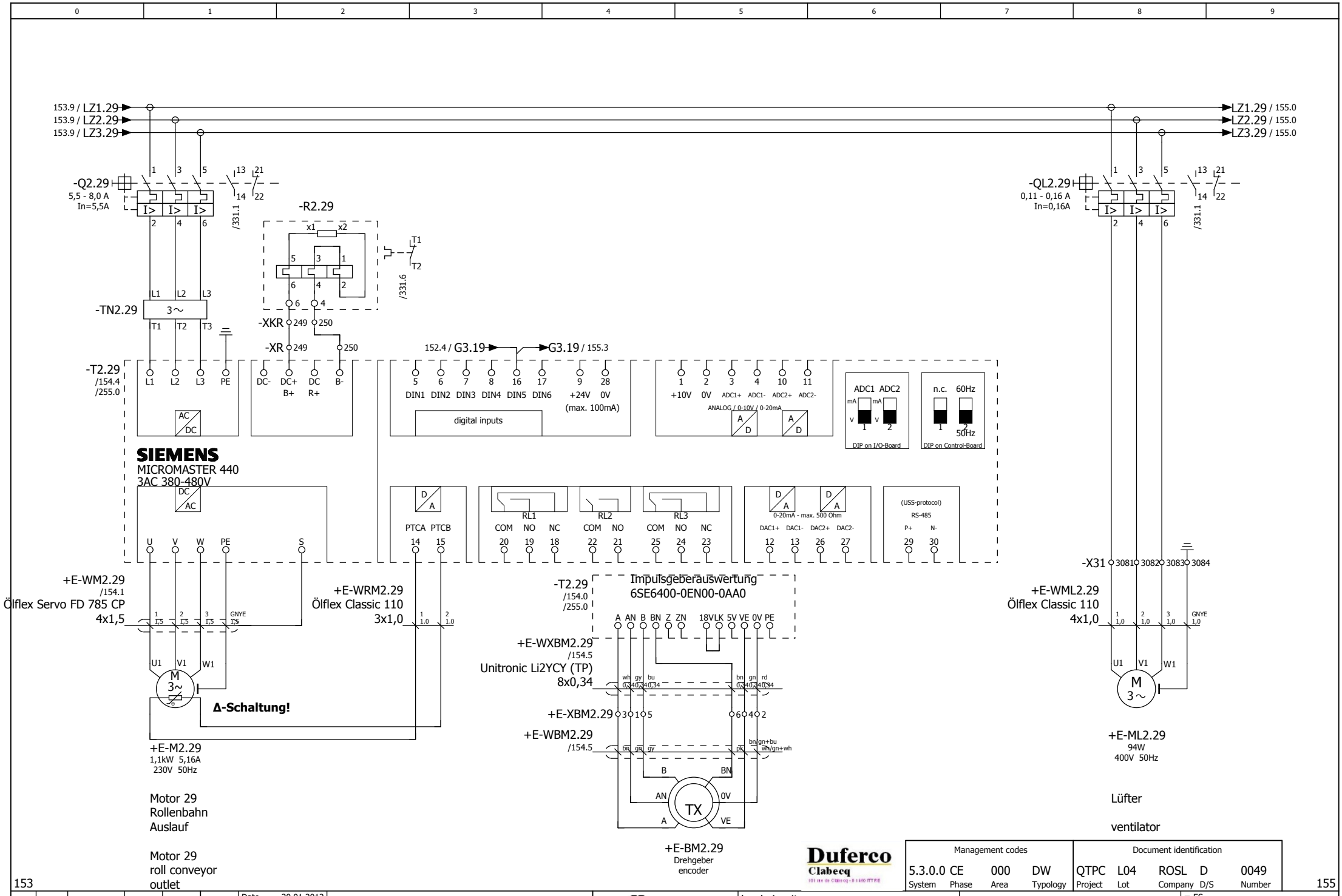

153

155

Duferco Clabecq

Management codes				Document identification				
5.3.0.0	CE	000	DW	QTPC	L04	ROSL	D	0049
System	Phase	Area	Typology	Project	Lot	Company	D/S	Number

						Date	30.01.2012	
						Dus		
Rev.	Date	Description	Prepared	Checked	Approved			

Duferco (SBM 2) Schaltschrank

in place of | Replaced by

RÖSLER finding a better way ...

load circuit
roll conveyor outlet M29

= ES
+ S

01-130070 00

Page 154
from 565

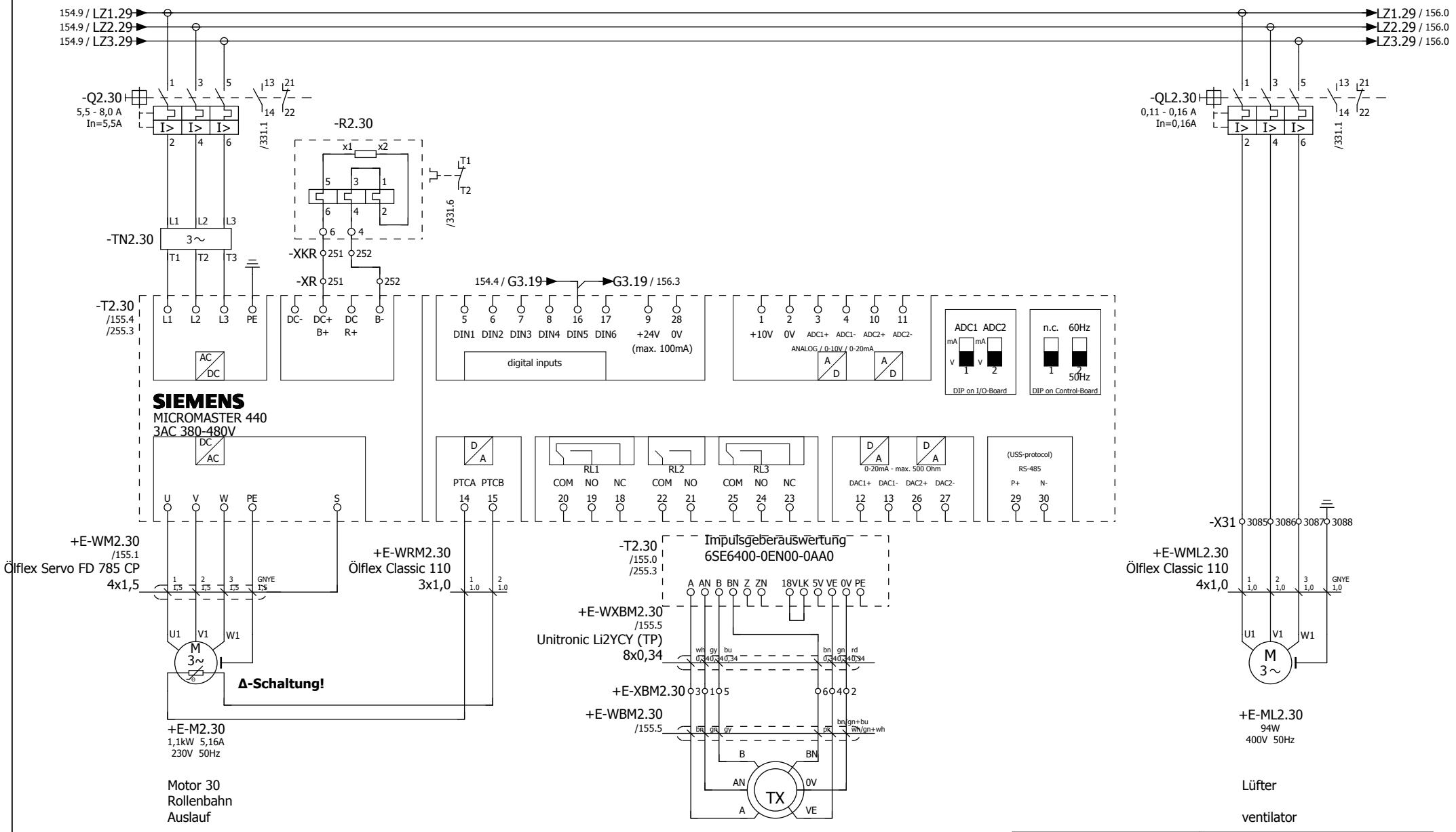

154

156

Management codes				Document identification				
5.3.0.0	CE	000	DW	QTPC	L04	ROSL	D	0049
System	Phase	Area	Typology	Project	Lot	Company	D/S	Number

Duferco Clabecq

Rev.	Date	Description	Prepared	Checked	Approved			
						Date	30.01.2012	
						Dus		

Duferco (SBM 2) Schaltschrank

in place of | Replaced by

RÖSLER finding a better way ...

load circuit
roll conveyor outlet M30

= ES
+ S

01-130070 00

Page 155
from 565

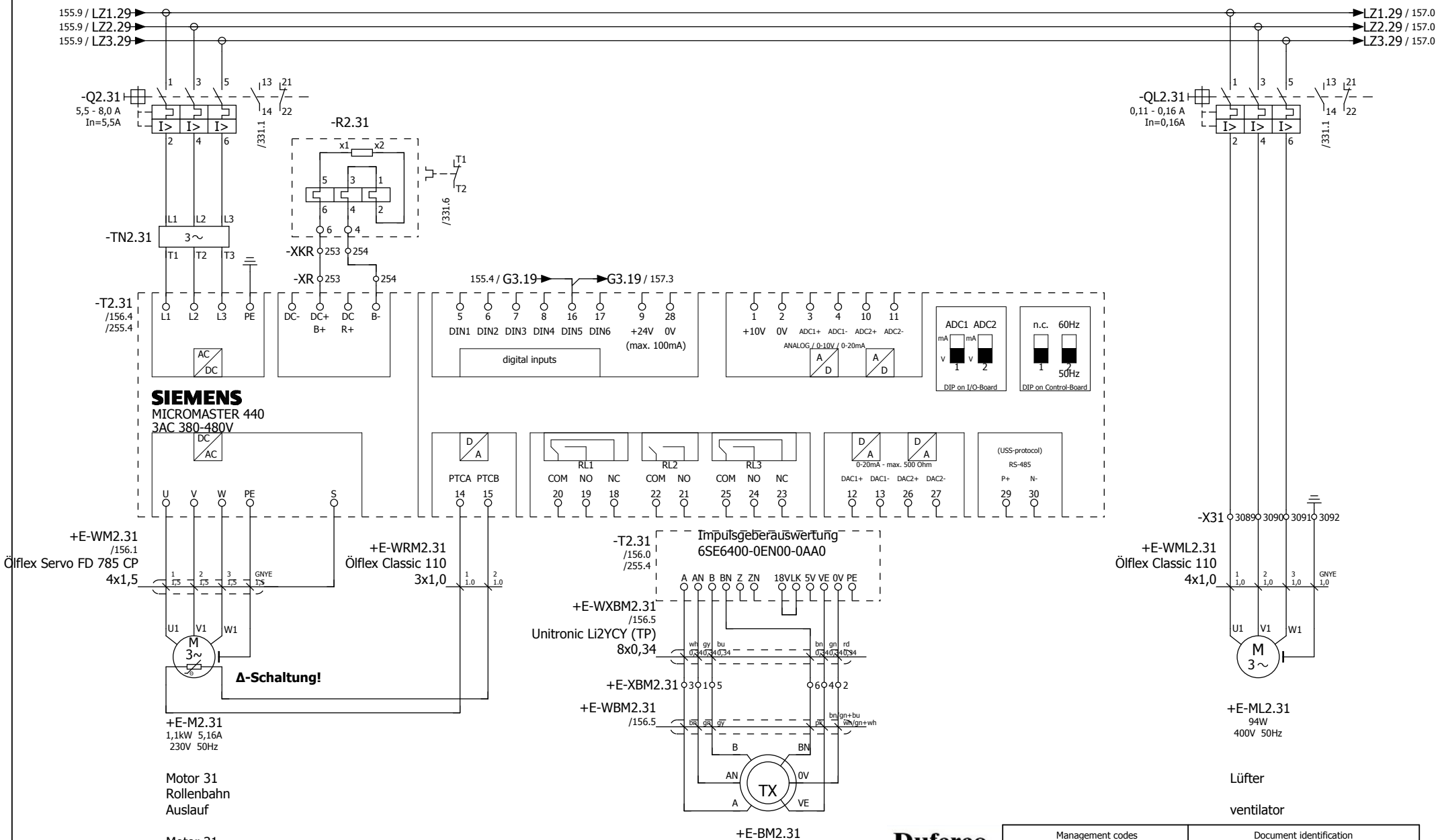

155

157

Management codes				Document identification				
5.3.0.0	CE	000	DW	QTPC	L04	ROSL	D	0049
System	Phase	Area	Typology	Project	Lot	Company	D/S	Number

Duferco Clabecq

Rev.	Date	Description	Prepared	Checked	Approved			
						Date	30.01.2012	
						Dus		

Duferco (SBM 2) Schaltschrank

in place of | Replaced by

RÖSLER finding a better way ...

load circuit
roll conveyor outlet M31

= ES
+ S

01-130070 00

Page 156
from 565

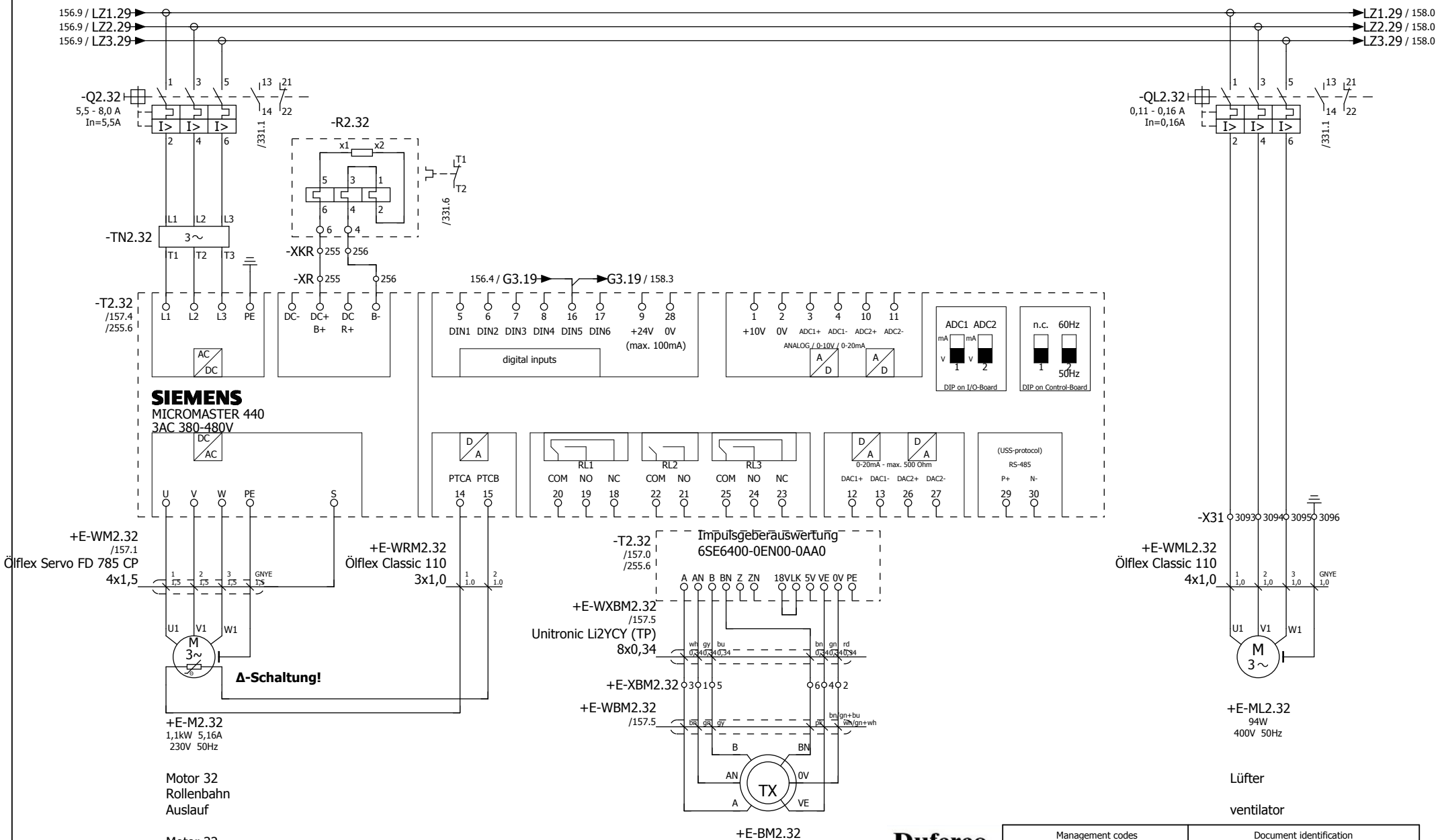

156

158

Management codes				Document identification				
5.3.0.0	CE	000	DW	QTPC	L04	ROSL	D	0049
System	Phase	Area	Typology	Project	Lot	Company	D/S	Number

Duferco Clabecq

Rev.	Date	Description	Prepared	Checked	Approved			
						Date	30.01.2012	
						Dus		

Duferco (SBM 2) Schaltschrank

in place of | Replaced by

RÖSLER finding a better way ...

load circuit
roll conveyor outlet M32

= ES
+ S

01-130070 00

Page 157
from 565

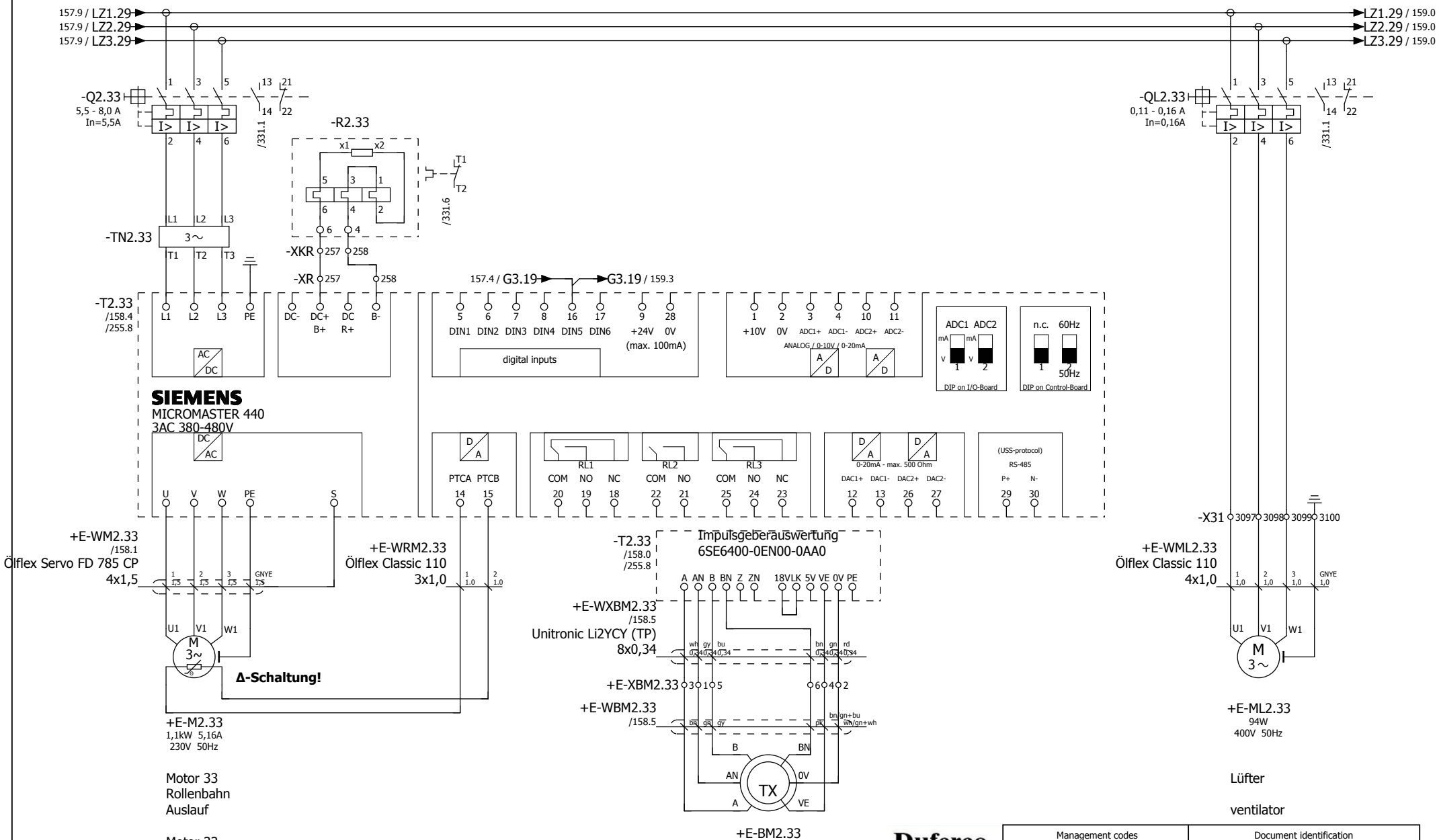

157

159

Management codes				Document identification				
5.3.0.0	CE	000	DW	QTPC	L04	ROSL	D	0049
System	Phase	Area	Typology	Project	Lot	Company	D/S	Number

						Date	30.01.2012	
						Dus		
Rev.	Date	Description	Prepared	Checked	Approved			

Duferco (SBM 2) Schaltschrank

in place of | Replaced by

RÖSLER finding a better way ...

load circuit
roll conveyor outlet M33

= ES
+ S

01-130070 00

Page 158
from 565

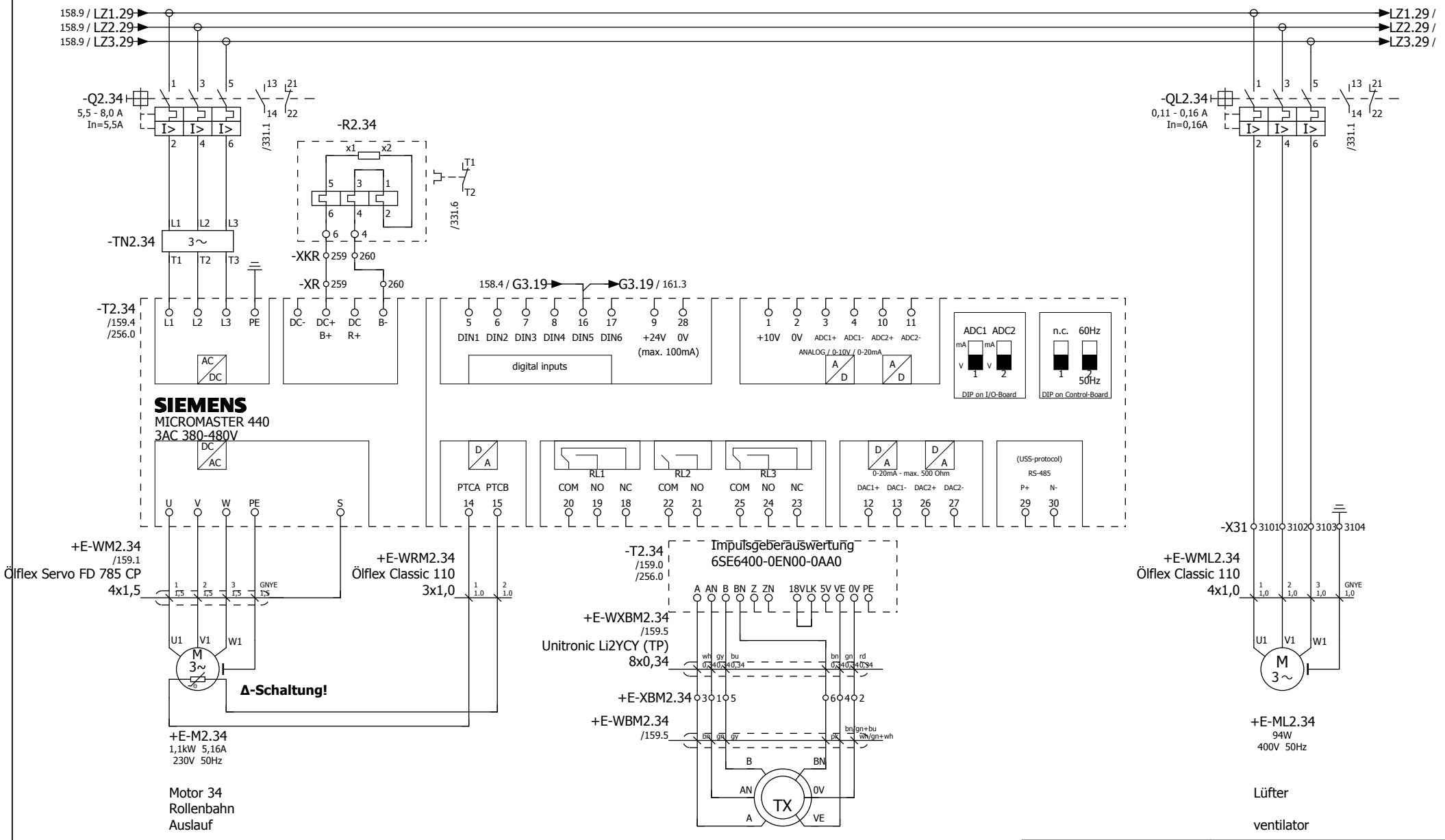

158

160

Management codes				Document identification				
5.3.0.0	CE	000	DW	QTPC	L04	ROSL	D	0049
System	Phase	Area	Typology	Project	Lot	Company	D/S	Number

Duferco Clabecq

Rev.	Date	Description	Prepared	Checked	Approved			
						Date	30.01.2012	
						Dus		

Duferco (SBM 2) Schaltschrank

in place of | Replaced by

RÖSLER finding a better way ...

load circuit
roll conveyor outlet M34

= ES
+ S

01-130070 00

Page 159
from 565

Zuleitung
Frequenzumrichter
Auslauf M35 - M40

input lead
frequency converter
outlet M35 - M40

Duferco Clabecq

Management codes				Document identification				
5.3.0.0	CE	000	DW	QTPC	L04	ROSL	D	0049
System	Phase	Area	Typology	Project	Lot	Company	D/S	Number

159 161

Rev.	Date	Description	Prepared	Checked	Approved	Date 30.01.2012 Dus	Duferco (SBM 2) Schaltschrank	
							in place of	Replaced by

RÖSLER finding a better way ...

load circuit
input lead FU M35 - M40

= ES
+ S

01-130070 00

Page 160
from 565

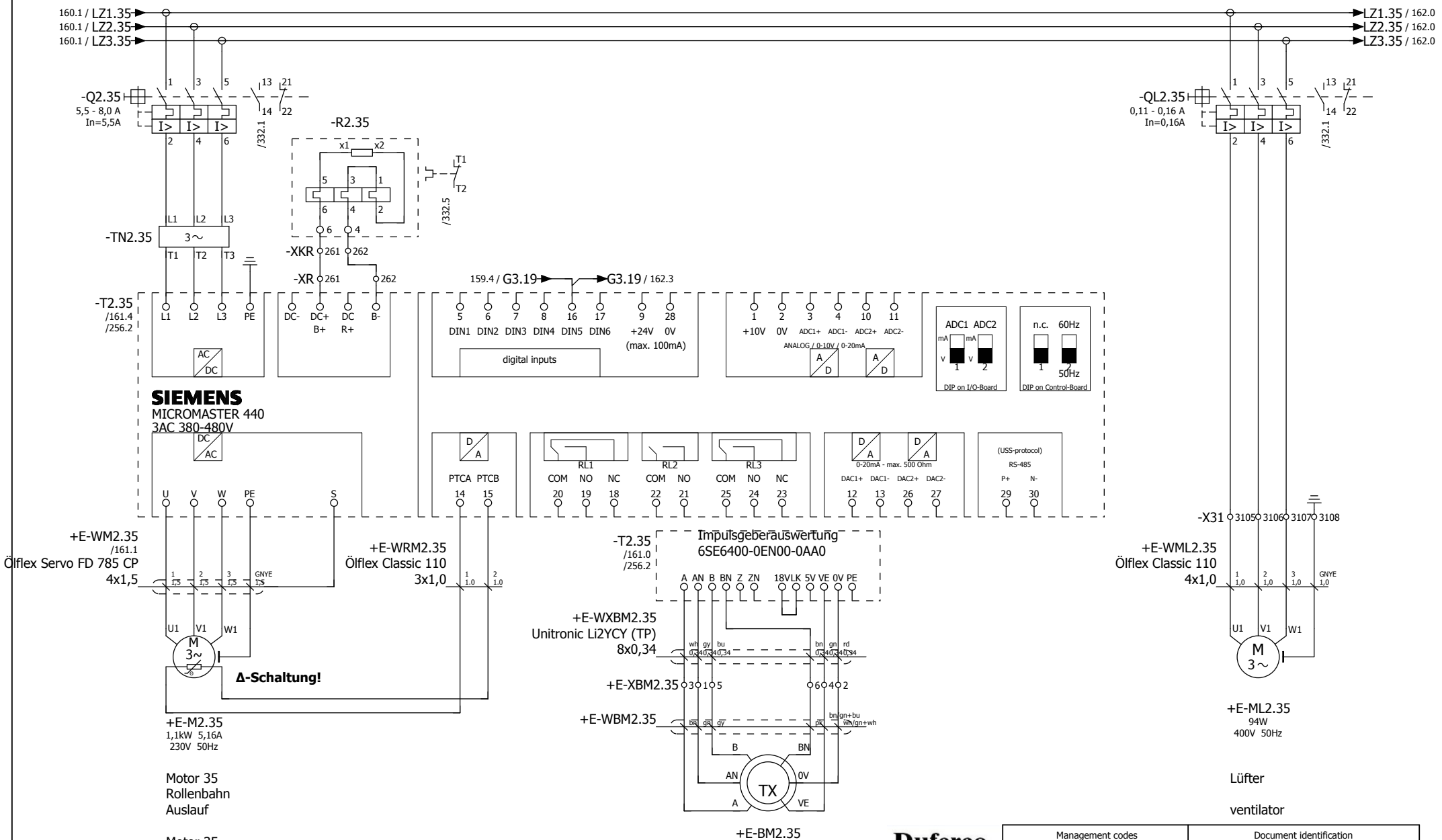

Management codes				Document identification				
5.3.0.0	CE	000	DW	QTPC	L04	ROSL	D	0049
System	Phase	Area	Typology	Project	Lot	Company	D/S	Number

Duferco Clabecq

160 162

Rev.	Date	Description	Prepared	Checked	Approved			
						Date	30.01.2012	
						Dus		

Duferco (SBM 2) Schaltschrank

in place of | Replaced by

RÖSLER finding a better way ...

load circuit
roll conveyor outlet M35

= ES
+ S

01-130070 00

Page 161
from 565

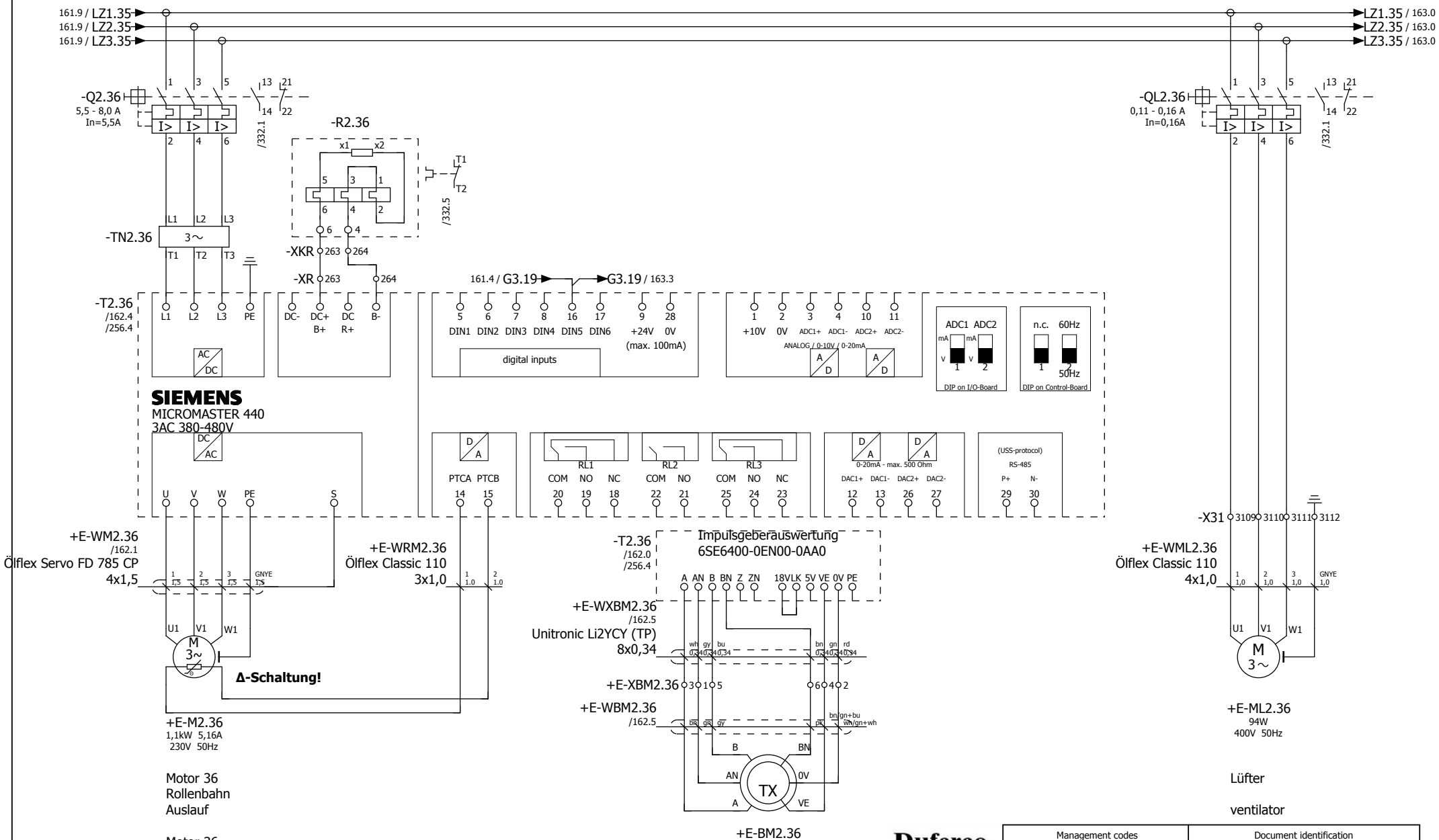

161

163

Management codes				Document identification				
5.3.0.0	CE	000	DW	QTPC	L04	ROSL	D	0049
System	Phase	Area	Typology	Project	Lot	Company	D/S	Number

Duferco Clabecq

Rev.	Date	Description	Prepared	Checked	Approved			
						Date	30.01.2012	
						Dus		

Duferco (SBM 2) Schaltschrank

in place of | Replaced by

RÖSLER finding a better way ...

load circuit
roll conveyor outlet M36

= ES
+ S

01-130070 00

Page 162
from 565

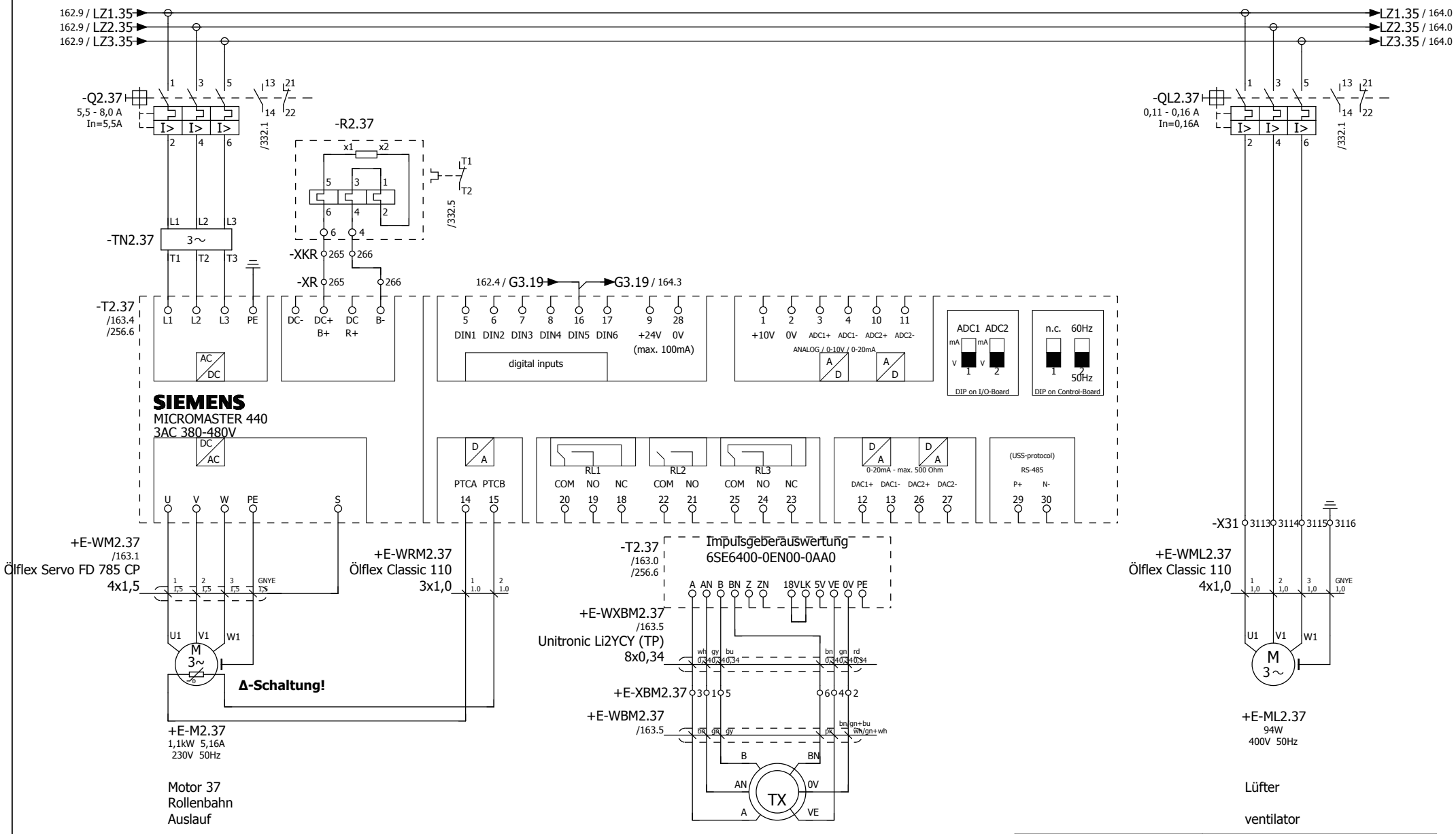

Management codes				Document identification				
5.3.0.0	CE	000	DW	QTPC	L04	ROSL	D	0049
System	Phase	Area	Typology	Project	Lot	Company	D/S	Number

Duferco Clabecq

162 164

Rev.	Date	Description	Prepared	Checked	Approved			
						Date	30.01.2012	
						Dus		

Duferco (SBM 2) Schaltschrank

in place of | Replaced by

RÖSLER finding a better way ...

load circuit
roll conveyor outlet M37

= ES
+ S

01-130070 00

Page 163
from 565

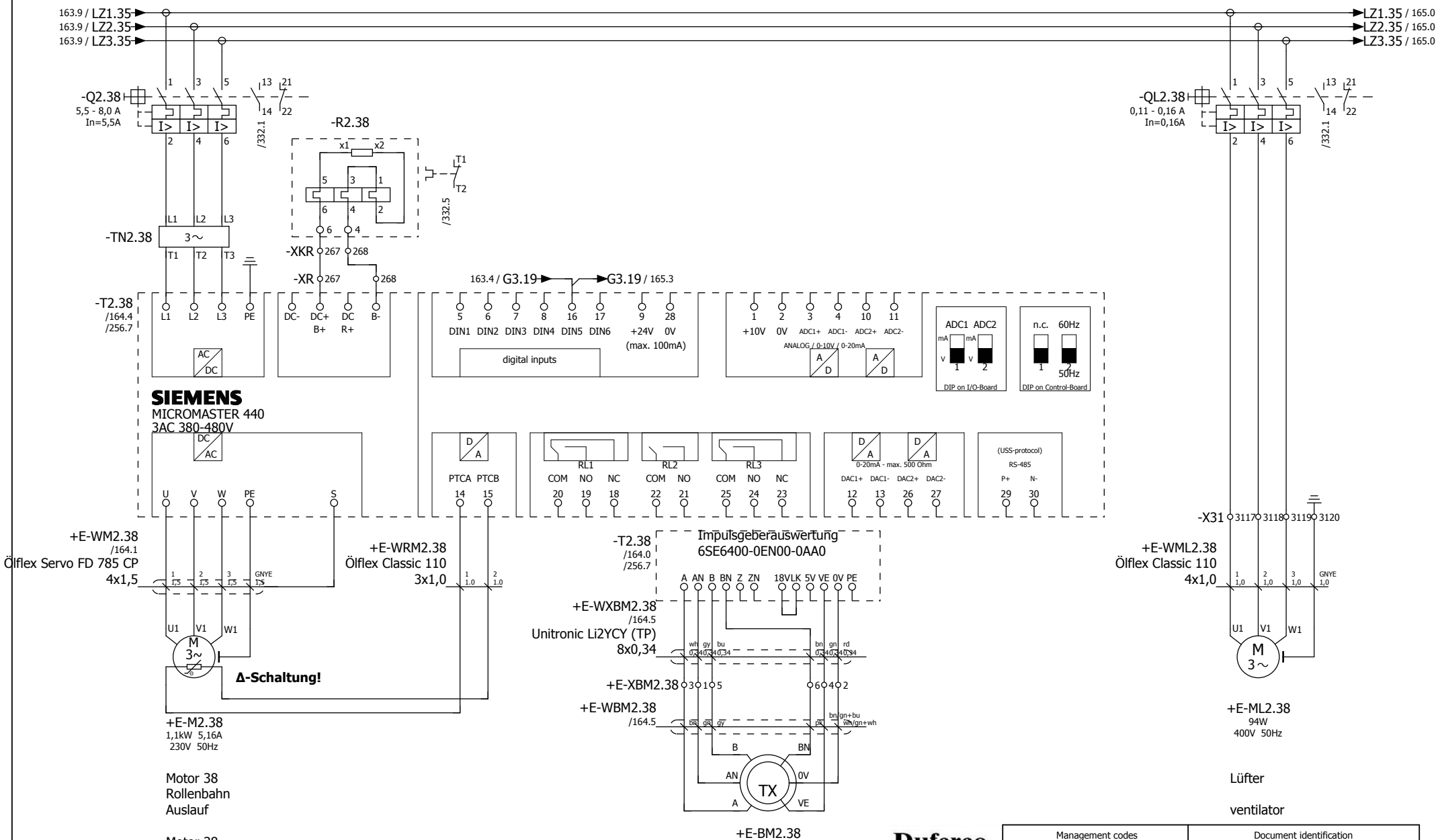

163

165

Duferco Clabecq

Management codes				Document identification				
5.3.0.0	CE	000	DW	QTPC	L04	ROSL	D	0049
System	Phase	Area	Typology	Project	Lot	Company	D/S	Number

						Date	30.01.2012	
						Dus		
Rev.	Date	Description	Prepared	Checked	Approved			

Duferco (SBM 2) Schaltschrank

in place of | Replaced by

RÖSLER finding a better way ...

load circuit
roll conveyor outlet M38

= ES
+ S

01-130070 00

Page 164
from 565

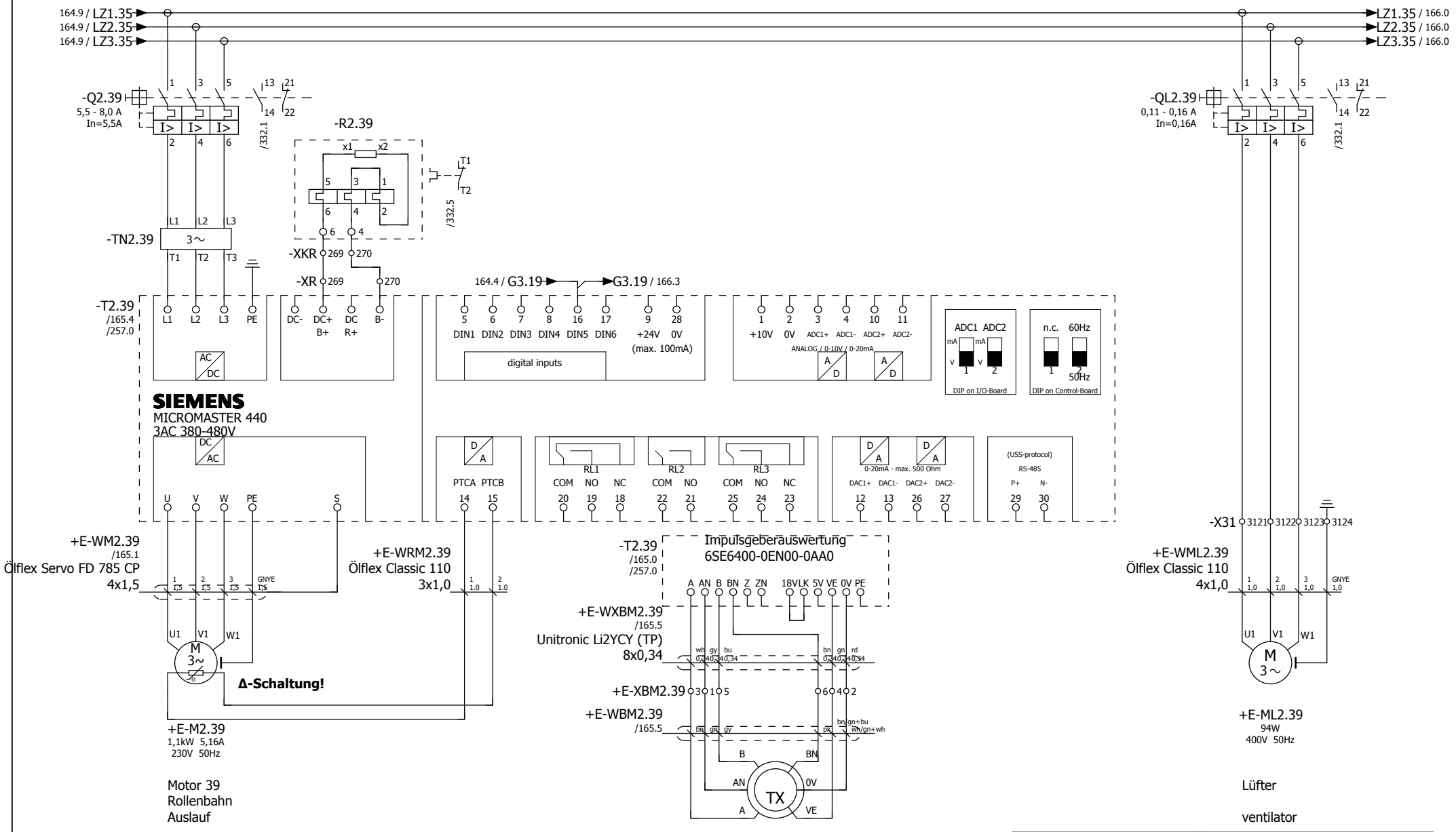

164

166

Management codes				Document identification				
5.3.0.0	CE	000	DW	QTPC	L04	ROSL	D	0049
System	Phase	Area	Typology	Project	Lot	Company	D/S	Number

Duferco Clabecq

Rev.	Date	Description	Prepared	Checked	Approved			
						Date	30.01.2012	
						Dus		

Duferco (SBM 2) Schaltschrank

in place of | Replaced by

RÖSLER finding a better way ...

load circuit
roll conveyor outlet M39

= ES
+ S

01-130070 00

Page 165
from 565

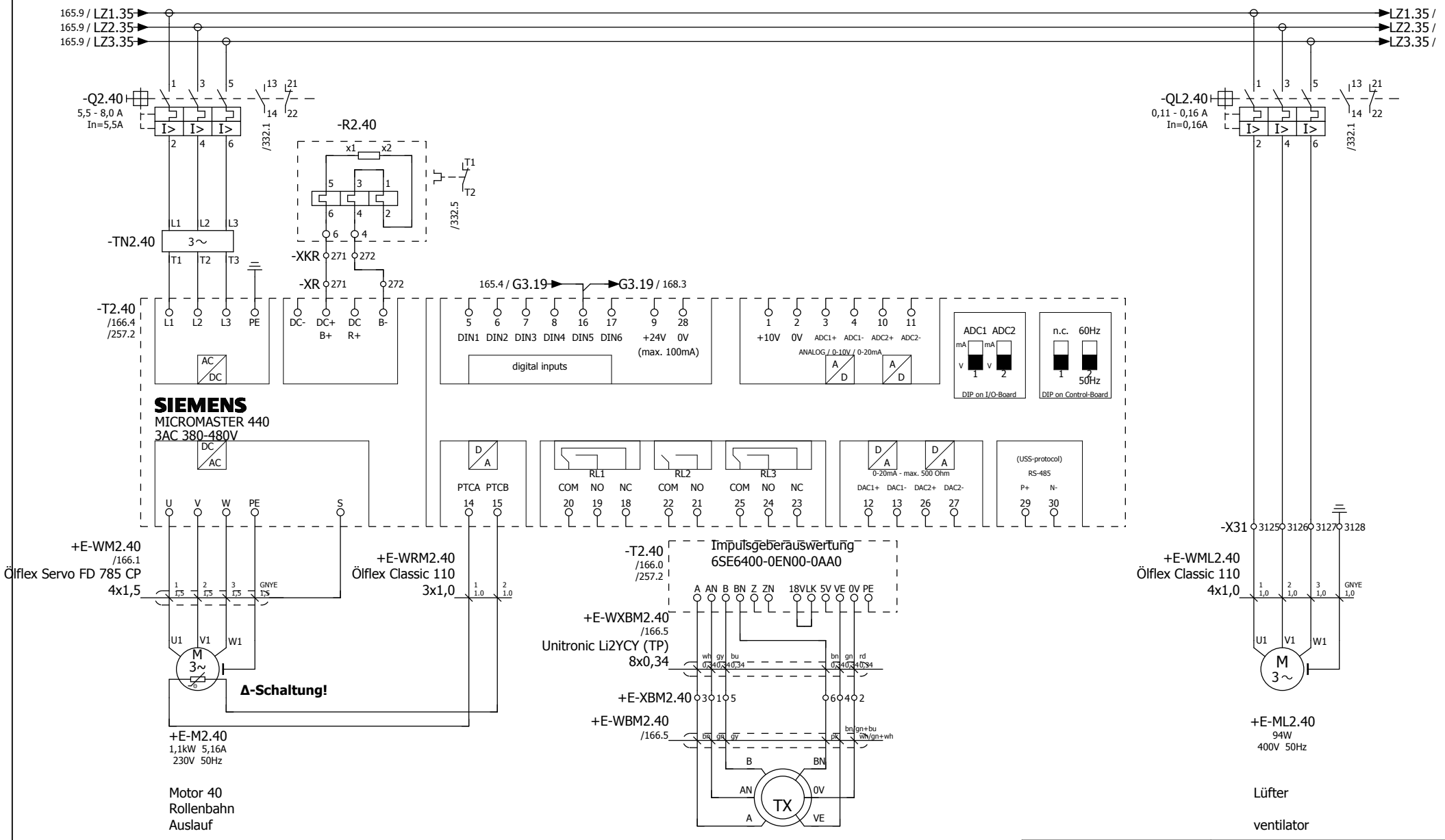

Duferco Clabecq

Management codes				Document identification				
5.3.0.0	CE	000	DW	QTPC	L04	ROSL	D	0049
System	Phase	Area	Typology	Project	Lot	Company	D/S	Number

165 167

						Date	30.01.2012	
						Dus		
Rev.	Date	Description	Prepared	Checked	Approved			

Duferco (SBM 2) Schaltschrank

in place of | Replaced by

RÖSLER finding a better way ...

load circuit
roll conveyor outlet M40

= ES
+ S

01-130070 00

Page 166
from 565

Zuleitung
Frequenzumrichter
Auslauf M41 - M46

input lead
frequency converter
outlet M41 - M46

Duferco Clabecq

Management codes				Document identification				
5.3.0.0	CE	000	DW	QTPC	L04	ROSL	D	0049
System	Phase	Area	Typology	Project	Lot	Company	D/S	Number

Rev.	Date	Description	Prepared	Checked	Approved	Date 30.01.2012 Dus	Duferco (SBM 2) Schaltschrank	
							in place of	Replaced by

RÖSLER finding a better way ...

load circuit
input lead FU M41 - M46

= ES
+ S

01-130070 00

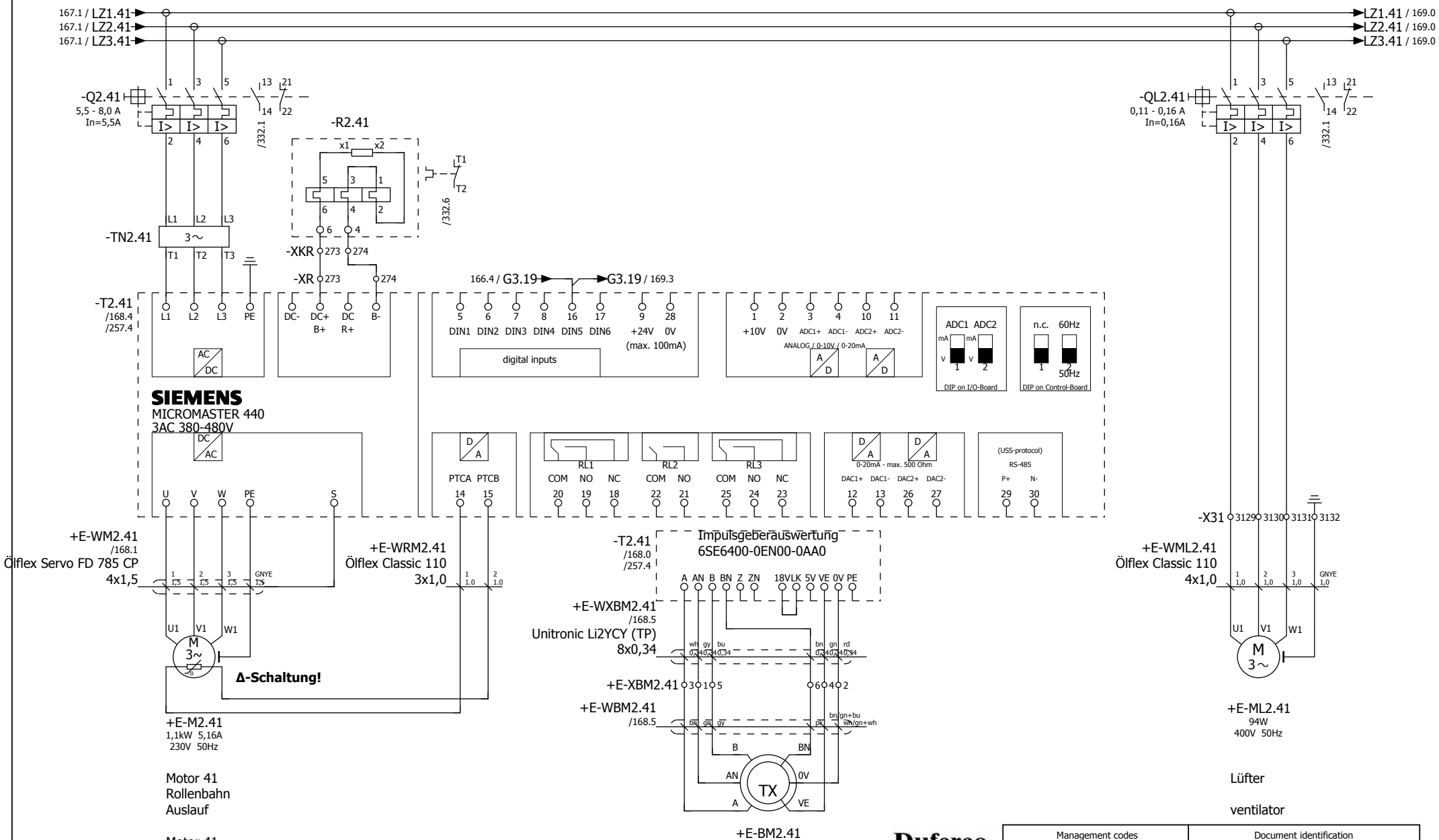

167

169

Duferco Clabecq

Management codes				Document identification				
5.3.0.0	CE	000	DW	QTPC	L04	ROSL	D	0049
System	Phase	Area	Typology	Project	Lot	Company	D/S	Number

						Date	30.01.2012	
						Dus		
Rev.	Date	Description	Prepared	Checked	Approved			

Duferco (SBM 2) Schaltschrank

in place of | Replaced by

RÖSLER finding a better way ...

load circuit
roll conveyor outlet M41

= ES
+ S

01-130070 00

Page 168
from 565

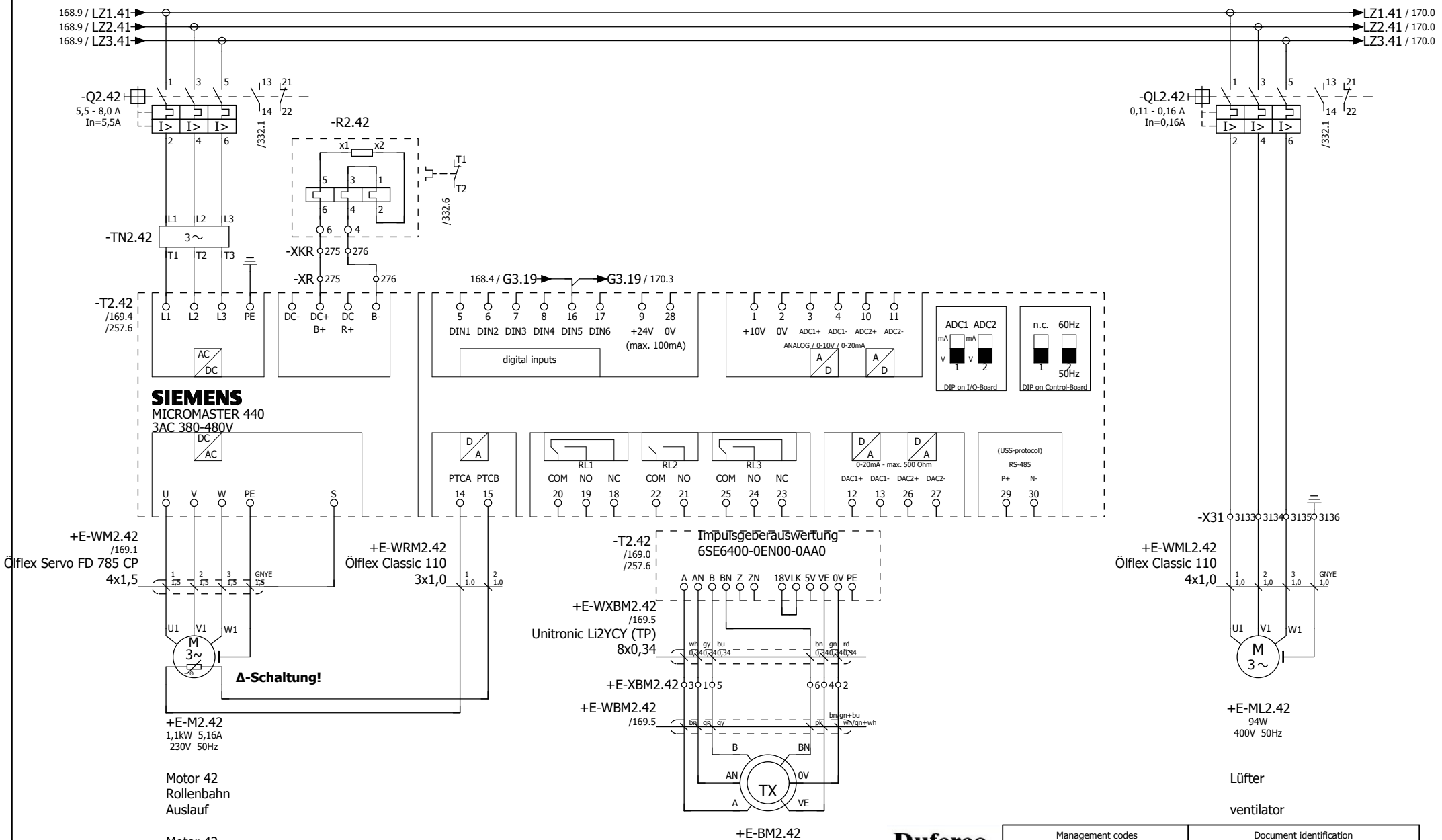

168

170

Duferco Clabecq

Management codes				Document identification				
5.3.0.0	CE	000	DW	QTPC	L04	ROSL	D	0049
System	Phase	Area	Typology	Project	Lot	Company	D/S	Number

						Date	30.01.2012	
						Dus		
Rev.	Date	Description	Prepared	Checked	Approved			

Duferco (SBM 2) Schaltschrank

in place of | Replaced by

RÖSLER finding a better way ...

load circuit
roll conveyor outlet M42

= ES
+ S

01-130070 00

Page 169
from 565

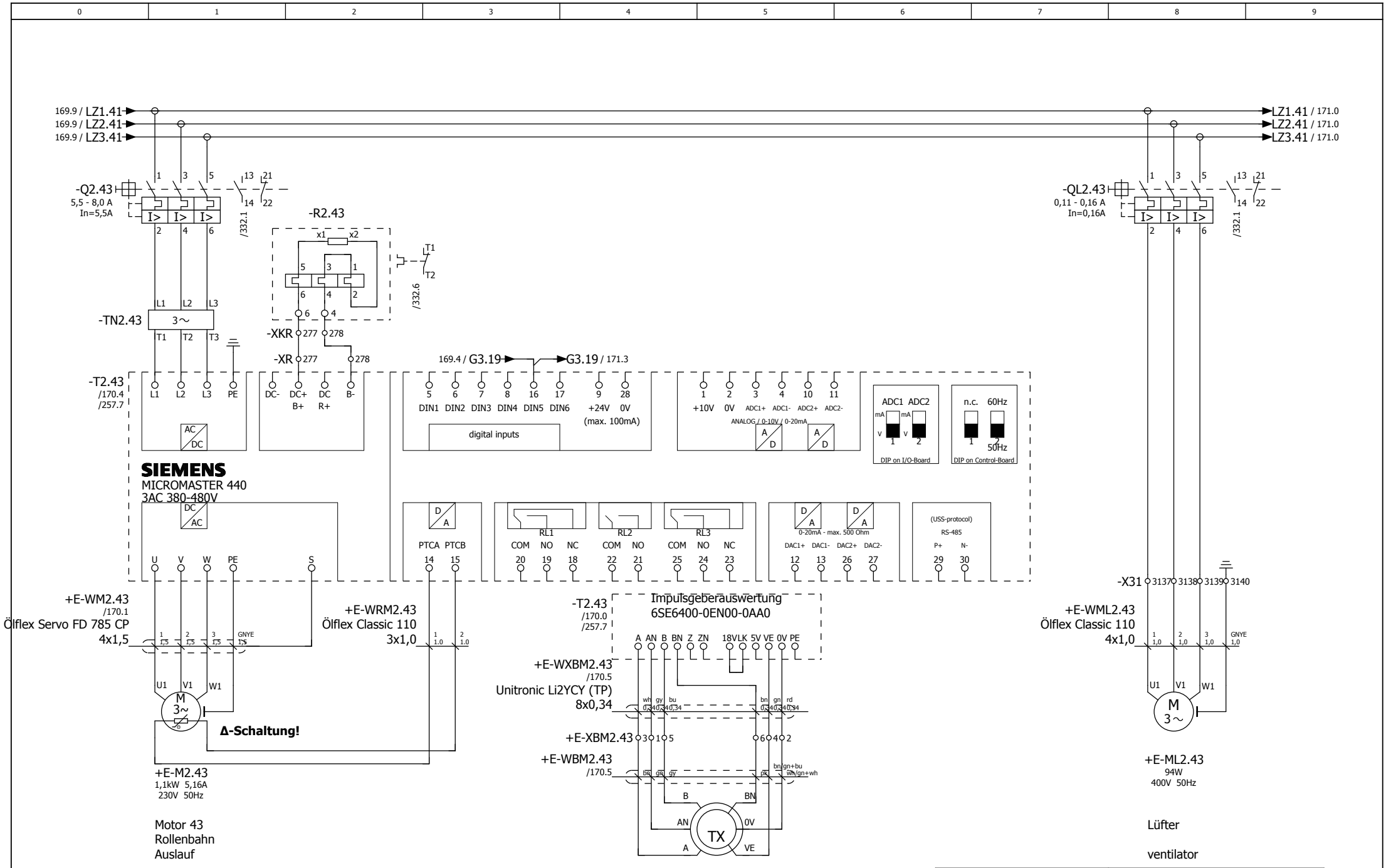

169

171

Management codes				Document identification				
5.3.0.0	CE	000	DW	QTPC	L04	ROSL	D	0049
System	Phase	Area	Typology	Project	Lot	Company	D/S	Number

Duferco Clabecq

Rev.	Date	Description	Prepared	Checked	Approved			
						Date	30.01.2012	
						Dus		

Duferco (SBM 2) Schaltschrank

in place of | Replaced by

RÖSLER finding a better way ...

load circuit
roll conveyor outlet M43

= ES
+ S

01-130070 00

Page 170
from 565

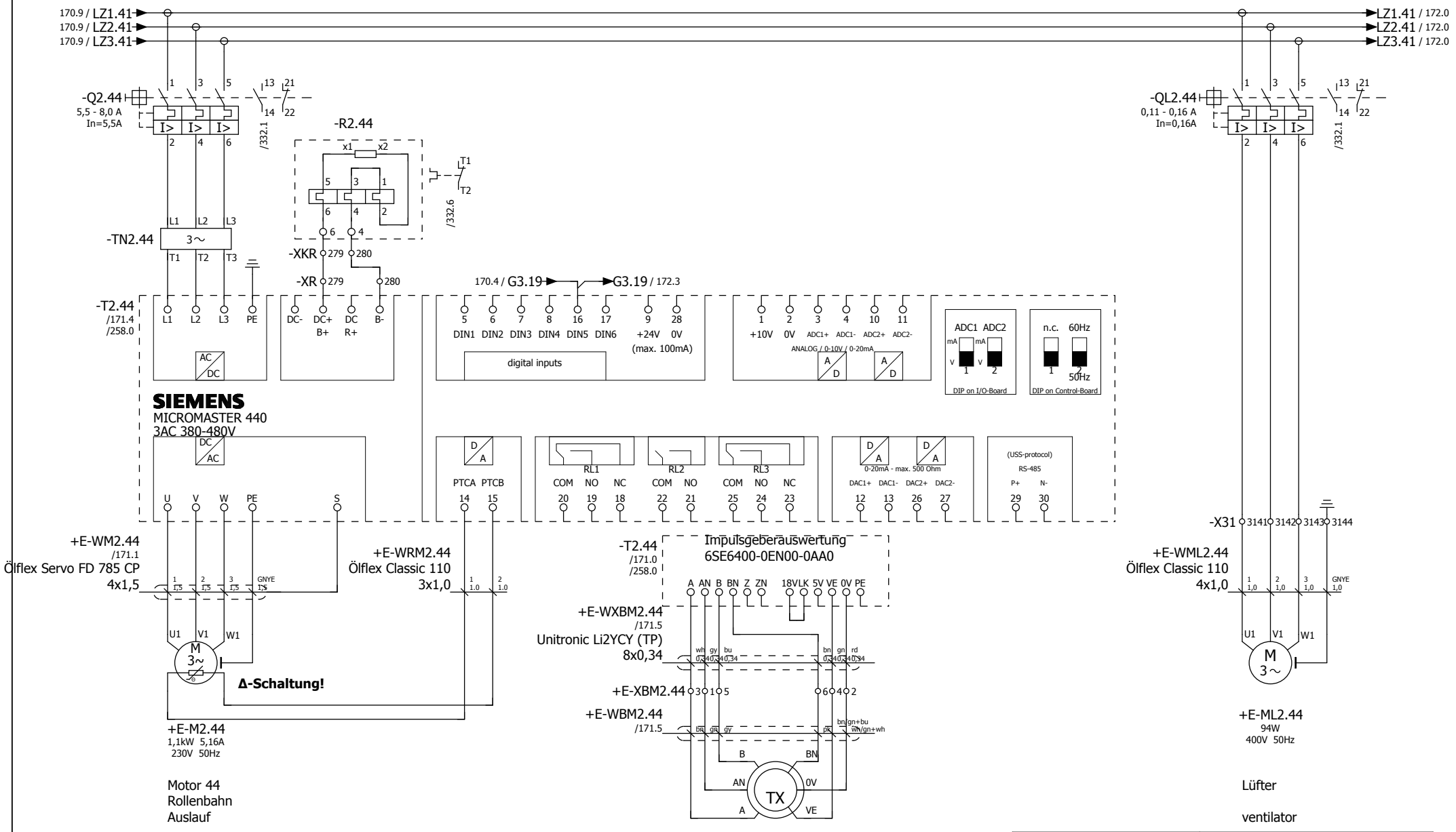

Management codes				Document identification				
5.3.0.0	CE	000	DW	QTPC	L04	ROSL	D	0049
System	Phase	Area	Typology	Project	Lot	Company	D/S	Number

Duferco Clabecq

170 172

Rev.	Date	Description	Prepared	Checked	Approved			
						Date	30.01.2012	
						Dus		

Duferco (SBM 2) Schaltschrank

in place of | Replaced by

RÖSLER finding a better way ...

load circuit
roll conveyor outlet M44

= ES
+ S

01-130070 00

Page 171
from 565

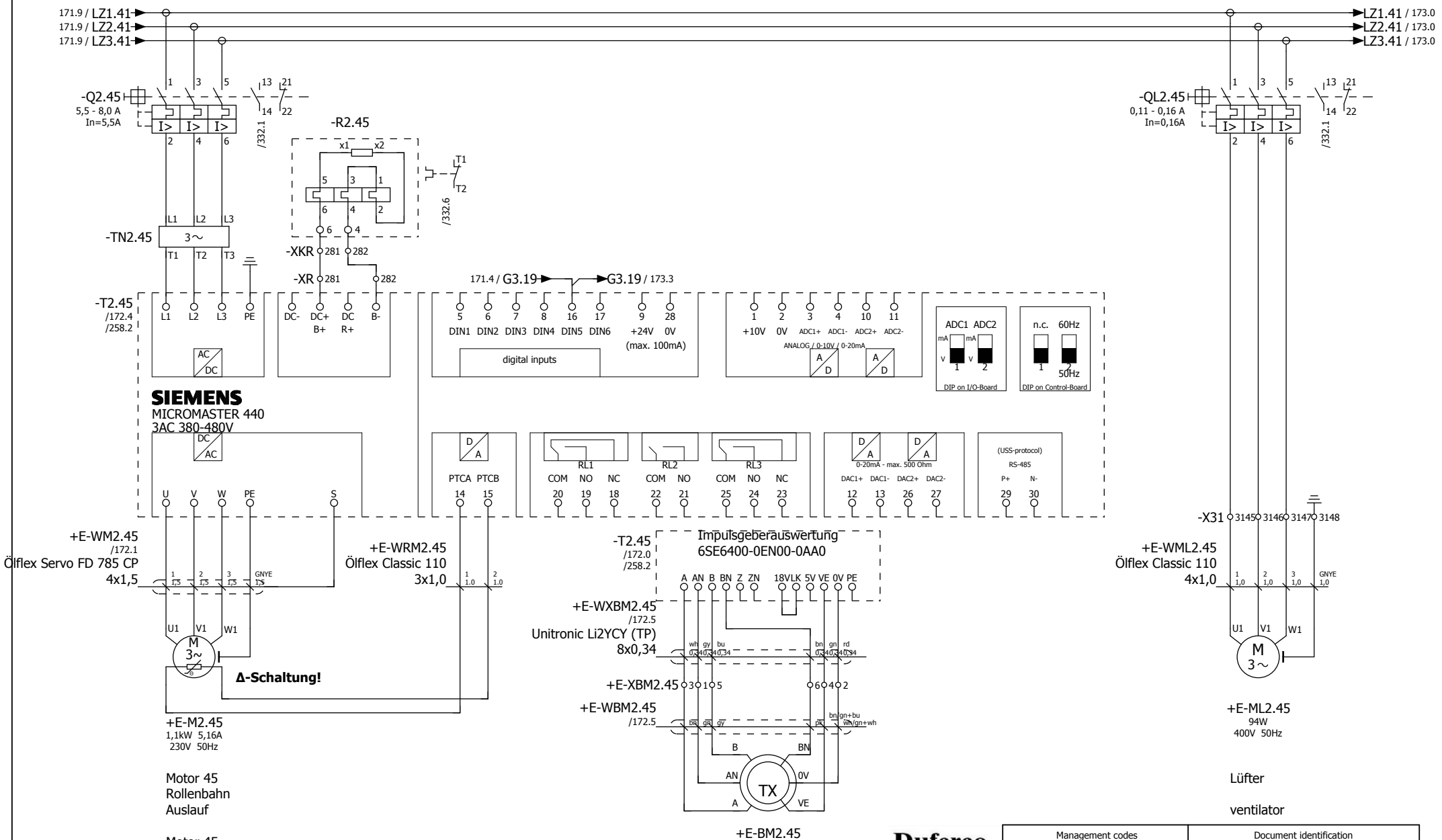

171

173

Duferco Clabecq

Management codes				Document identification				
5.3.0.0	CE	000	DW	QTPC	L04	ROSL	D	0049
System	Phase	Area	Typology	Project	Lot	Company	D/S	Number

						Date	30.01.2012	
						Dus		
Rev.	Date	Description	Prepared	Checked	Approved			

Duferco (SBM 2) Schaltschrank

in place of | Replaced by

RÖSLER finding a better way ...

load circuit
roll conveyor outlet M45

= ES
+ S

01-130070 00

Page 172
from 565

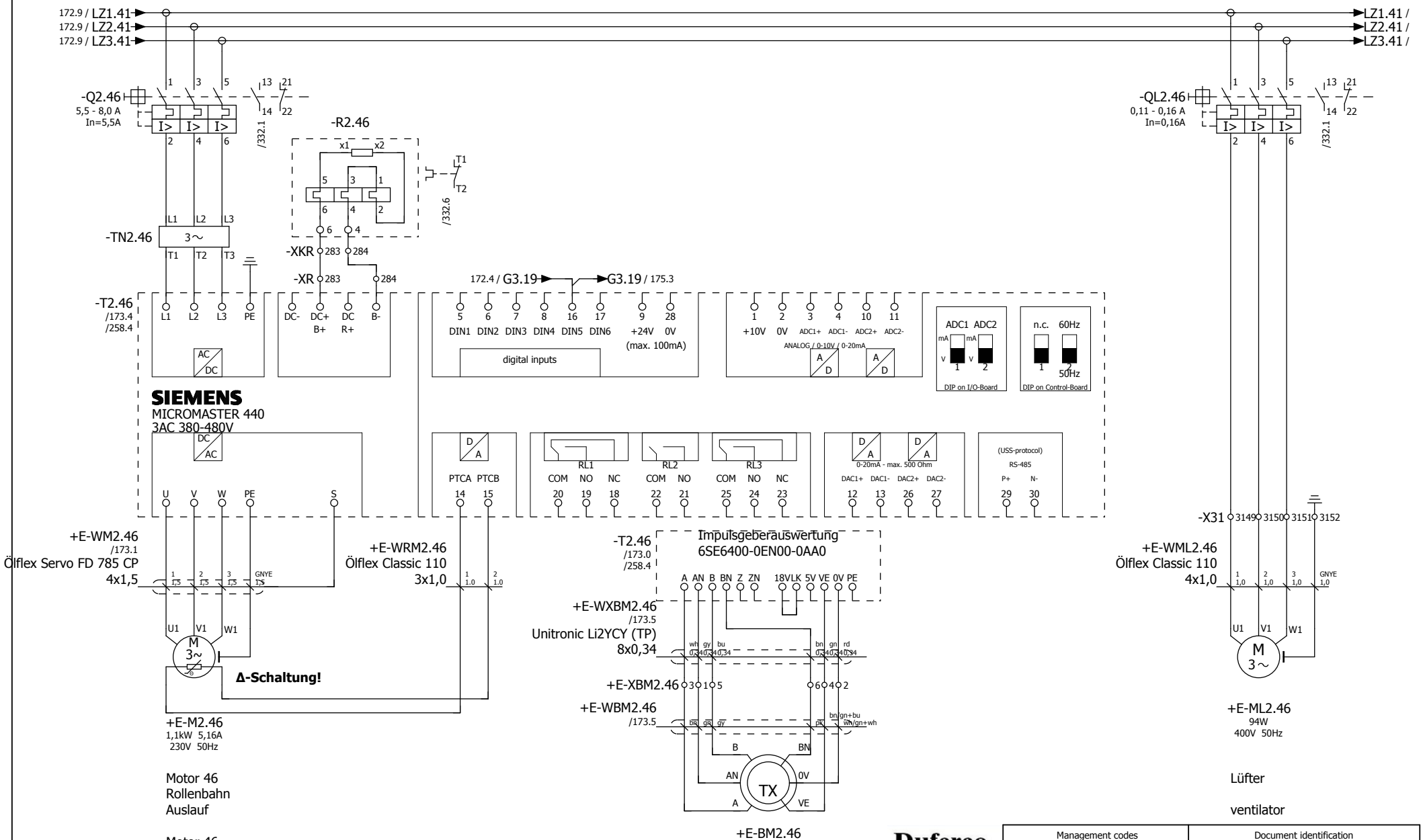

Management codes				Document identification				
5.3.0.0	CE	000	DW	QTPC	L04	ROSL	D	0049
System	Phase	Area	Typology	Project	Lot	Company	D/S	Number

172 174

Rev.	Date	Description	Prepared	Checked	Approved			
						Date	30.01.2012	
						Dus		

Duferco (SBM 2) Schaltschrank

in place of | Replaced by

RÖSLER finding a better way ...

load circuit
roll conveyor outlet M46

= ES
+ S

01-130070 00

Page 173
from 565

Zuleitung
Frequenzumrichter
Auslauf M47 - M52

input lead
frequency converter
outlet M47 - M52

Lüfter
Schaltschrank
ventilator
Enclosure

Duferco Clabecq

Management codes				Document identification				
5.3.0.0	CE	000	DW	QTPC	L04	ROSL	D	0049
System	Phase	Area	Typology	Project	Lot	Company	D/S	Number

173 175

Rev.	Date	Description	Prepared	Checked	Approved			
						Date	30.01.2012	
						Dus		

Duferco (SBM 2) Schaltschrank
in place of | Replaced by

RÖSLER finding a better way ...

load circuit
input lead FU M47 - M52

= ES
+ S

01-130070 00

Page 174
from 565

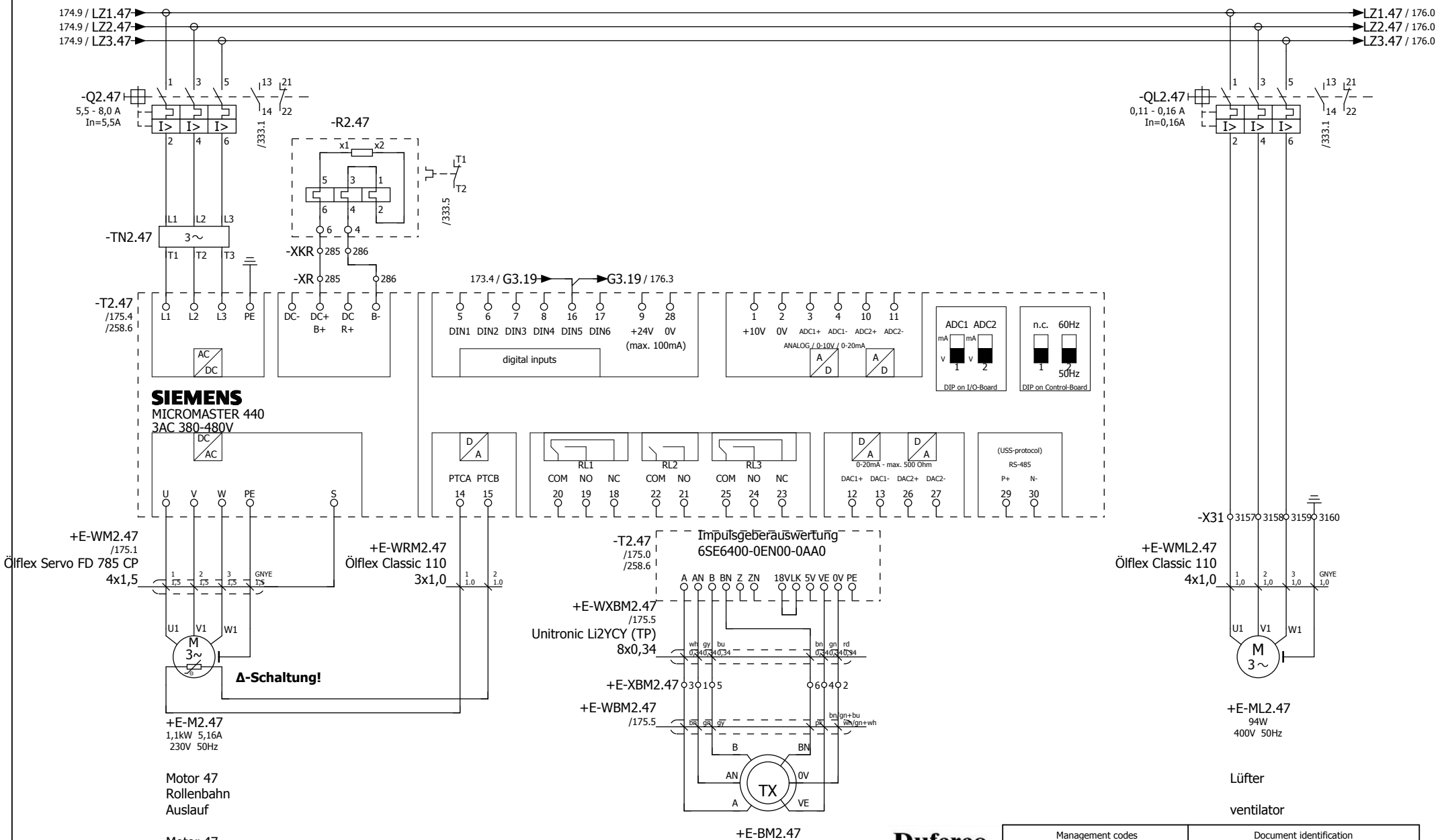

174

176

Management codes				Document identification				
5.3.0.0	CE	000	DW	QTPC	L04	ROSL	D	0049
System	Phase	Area	Typology	Project	Lot	Company	D/S	Number

Duferco Clabecq

Rev.	Date	Description	Prepared	Checked	Approved			
						Date	30.01.2012	
						Dus		

Duferco (SBM 2) Schaltschrank

in place of | Replaced by

RÖSLER finding a better way ...

load circuit
roll conveyor outlet M47

= ES
+ S

01-130070 00

Page 175
from 565

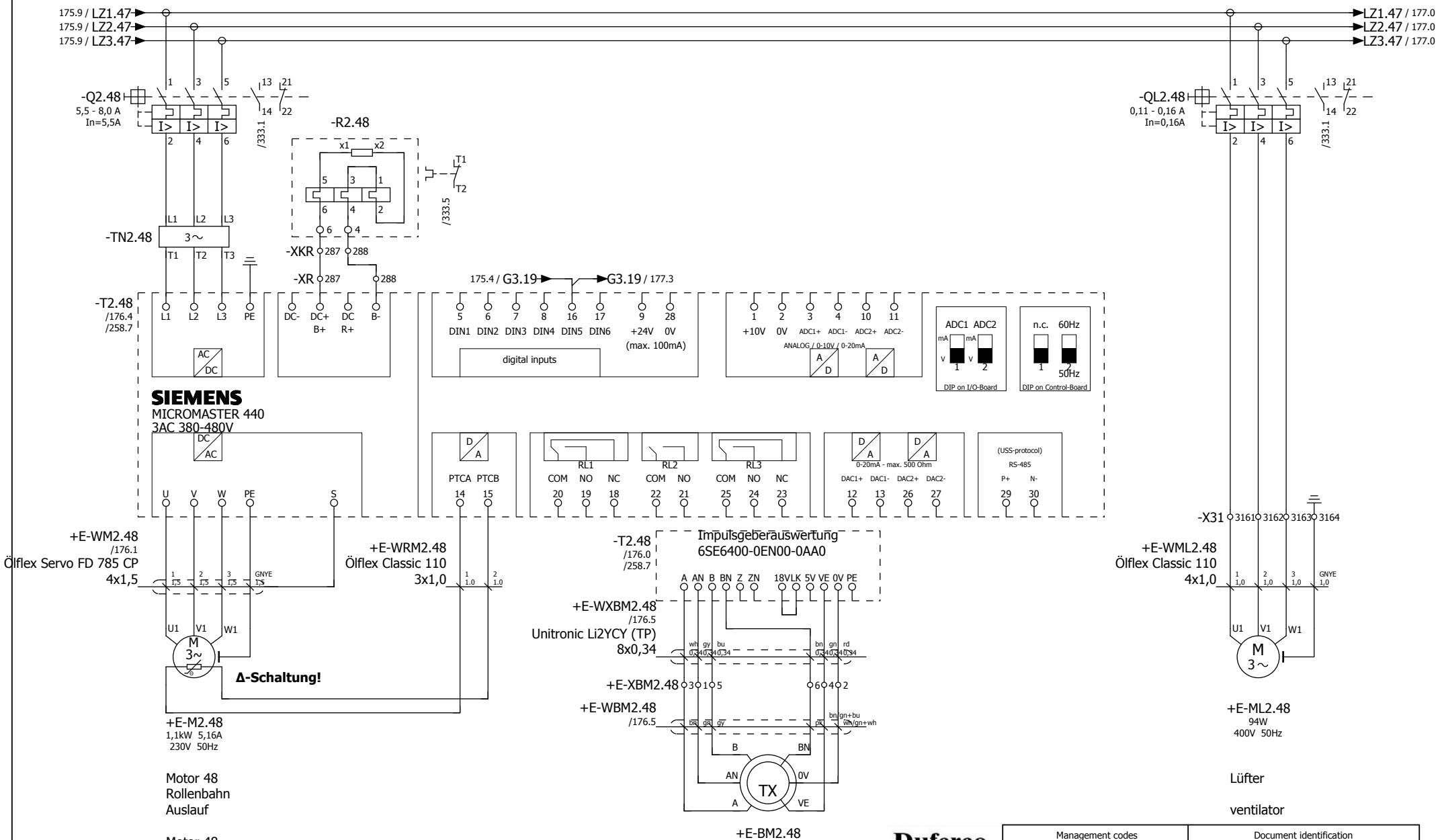

Management codes				Document identification				
5.3.0.0	CE	000	DW	QTPC	L04	ROSL	D	0049
System	Phase	Area	Typology	Project	Lot	Company	D/S	Number

175 177

Rev.	Date	Description	Prepared	Checked	Approved			
						Date	30.01.2012	
						Dus		

Duferco (SBM 2) Schaltschrank

in place of | Replaced by

RÖSLER finding a better way ...

load circuit
roll conveyor outlet M48

= ES
+ S

01-130070 00

Page 176
from 565

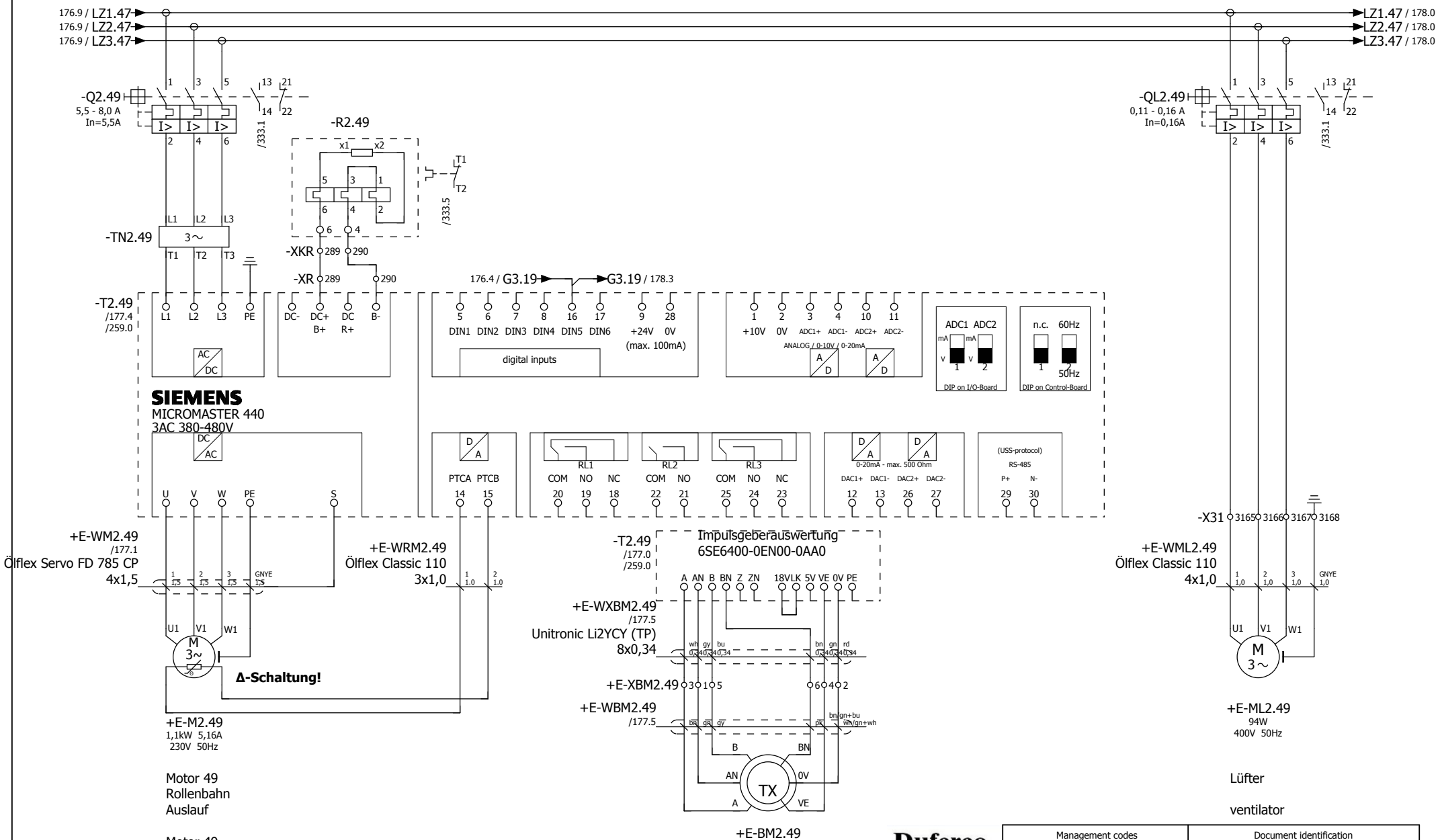

176

178

Management codes				Document identification				
5.3.0.0	CE	000	DW	QTPC	L04	ROSL	D	0049
System	Phase	Area	Typology	Project	Lot	Company	D/S	Number

						Date	30.01.2012	
						Dus		
Rev.	Date	Description	Prepared	Checked	Approved			

Duferco (SBM 2) Schaltschrank

in place of | Replaced by

RÖSLER finding a better way ...

load circuit
roll conveyor outlet M49

= ES
+ S

01-130070 00

Page 177
from 565

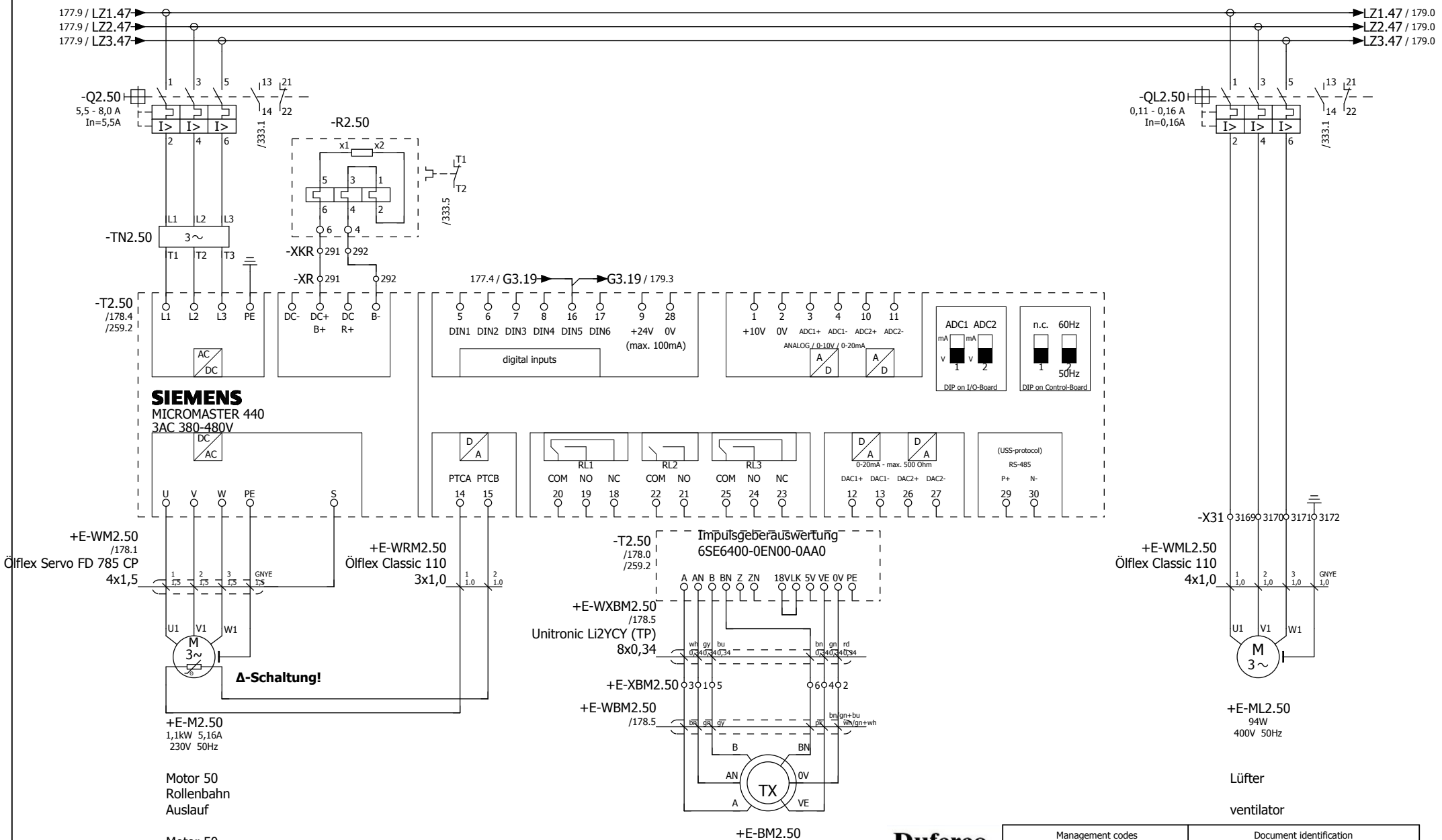

Management codes				Document identification				
5.3.0.0	CE	000	DW	QTPC	L04	ROSL	D	0049
System	Phase	Area	Typology	Project	Lot	Company	D/S	Number

Duferco Clabecq

177 179

Rev.	Date	Description	Prepared	Checked	Approved			
						Date	30.01.2012	
						Dus		

Duferco (SBM 2) Schaltschrank

in place of | Replaced by

RÖSLER finding a better way ...

load circuit
roll conveyor outlet M50

= ES
+ S

01-130070 00

Page 178
from 565

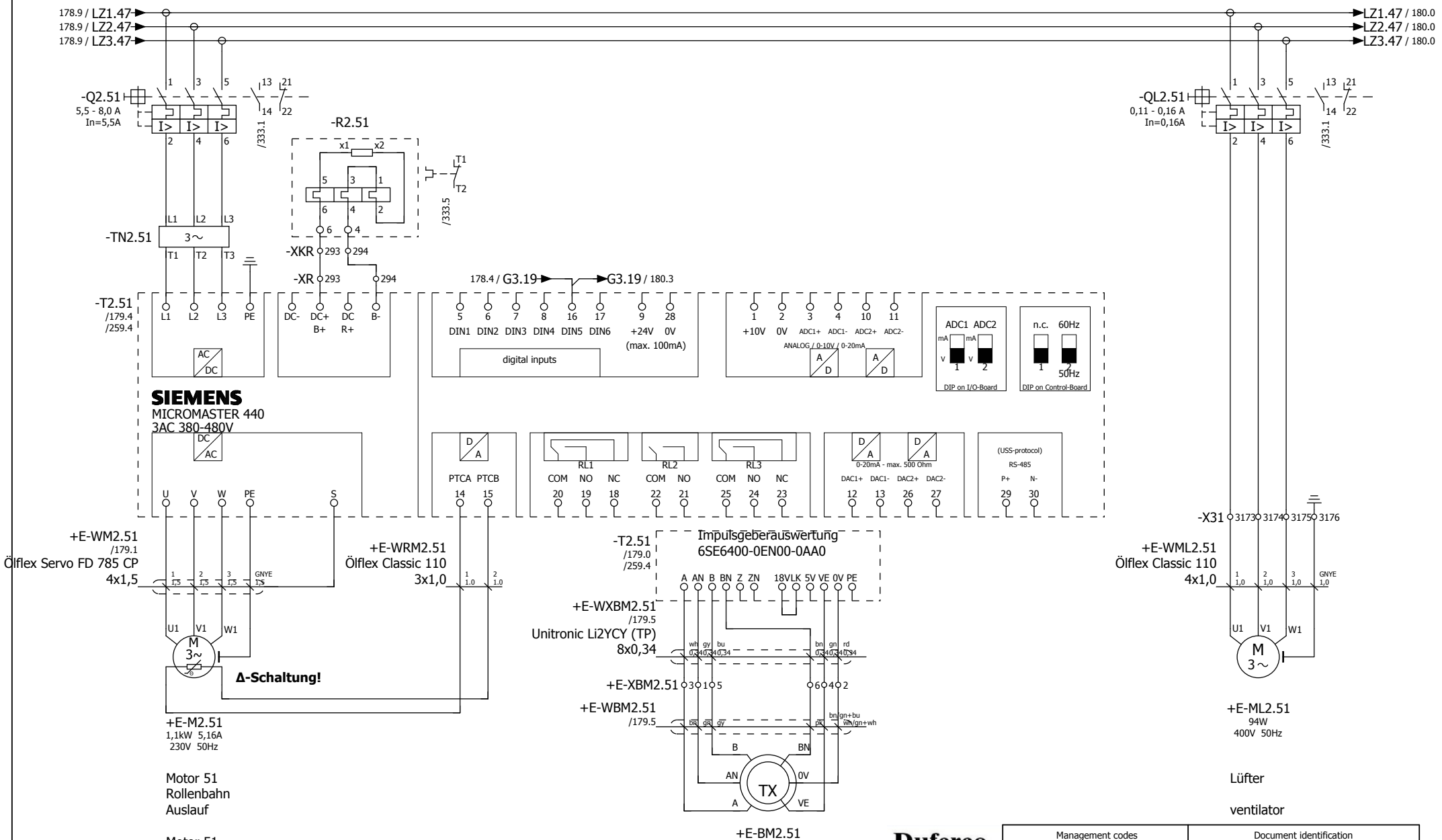

178

180

Management codes				Document identification				
5.3.0.0	CE	000	DW	QTPC	L04	ROSL	D	0049
System	Phase	Area	Typology	Project	Lot	Company	D/S	Number

Rev.	Date	Description	Prepared	Checked	Approved			
						Date	30.01.2012	
						Dus		

Duferco (SBM 2) Schaltschrank

in place of | Replaced by

RÖSLER finding a better way ...

load circuit
roll conveyor outlet M51

= ES
+ S

01-130070 00

Page 179
from 565

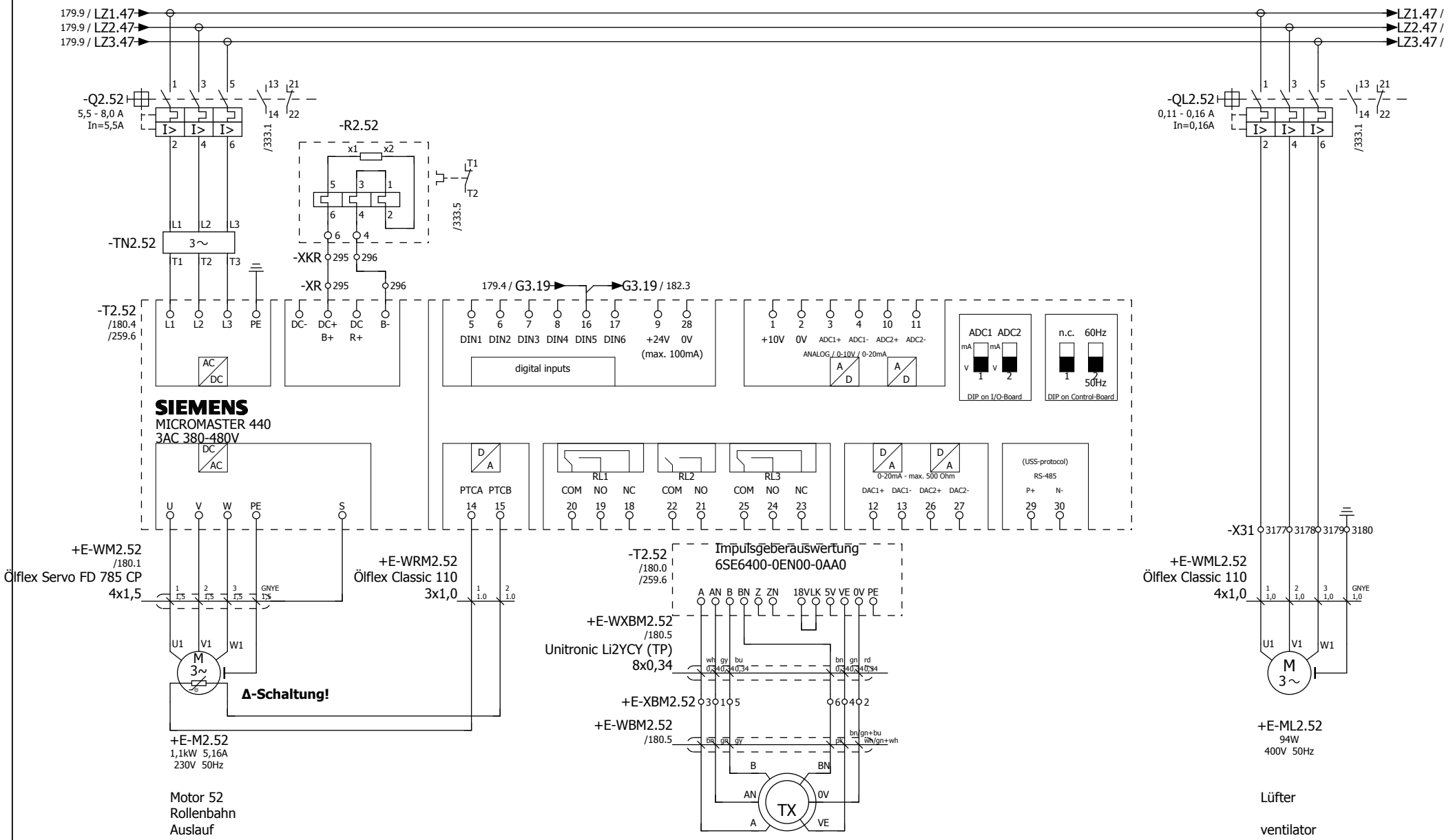

179

181

Management codes				Document identification				
5.3.0.0	CE	000	DW	QTPC	L04	ROSL	D	0049
System	Phase	Area	Typology	Project	Lot	Company	D/S	Number

Duferco Clabecq

Rev.	Date	Description	Prepared	Checked	Approved		
						Date	30.01.2012
						Dus	

Duferco (SBM 2) Schaltschrank

in place of | Replaced by

RÖSLER finding a better way ...

load circuit
roll conveyor outlet M52

= ES
+ S

01-130070 00

Page 180
from 565

Zuleitung
Frequenzumrichter
Auslauf M53 - M58

input lead
frequency converter
outlet M53 - M58

Duferco Clabecq

Management codes				Document identification				
5.3.0.0	CE	000	DW	QTPC	L04	ROSL	D	0049
System	Phase	Area	Typology	Project	Lot	Company	D/S	Number

Rev.	Date	Description	Prepared	Checked	Approved	Date 30.01.2012	Duferco (SBM 2) Schaltschrank	RÖSLER finding a better way ...	load circuit input lead FU M53 - M58	= ES	01-130070 00	Page 181
						Dus				+ S		from 565
							in place of	Replaced by				

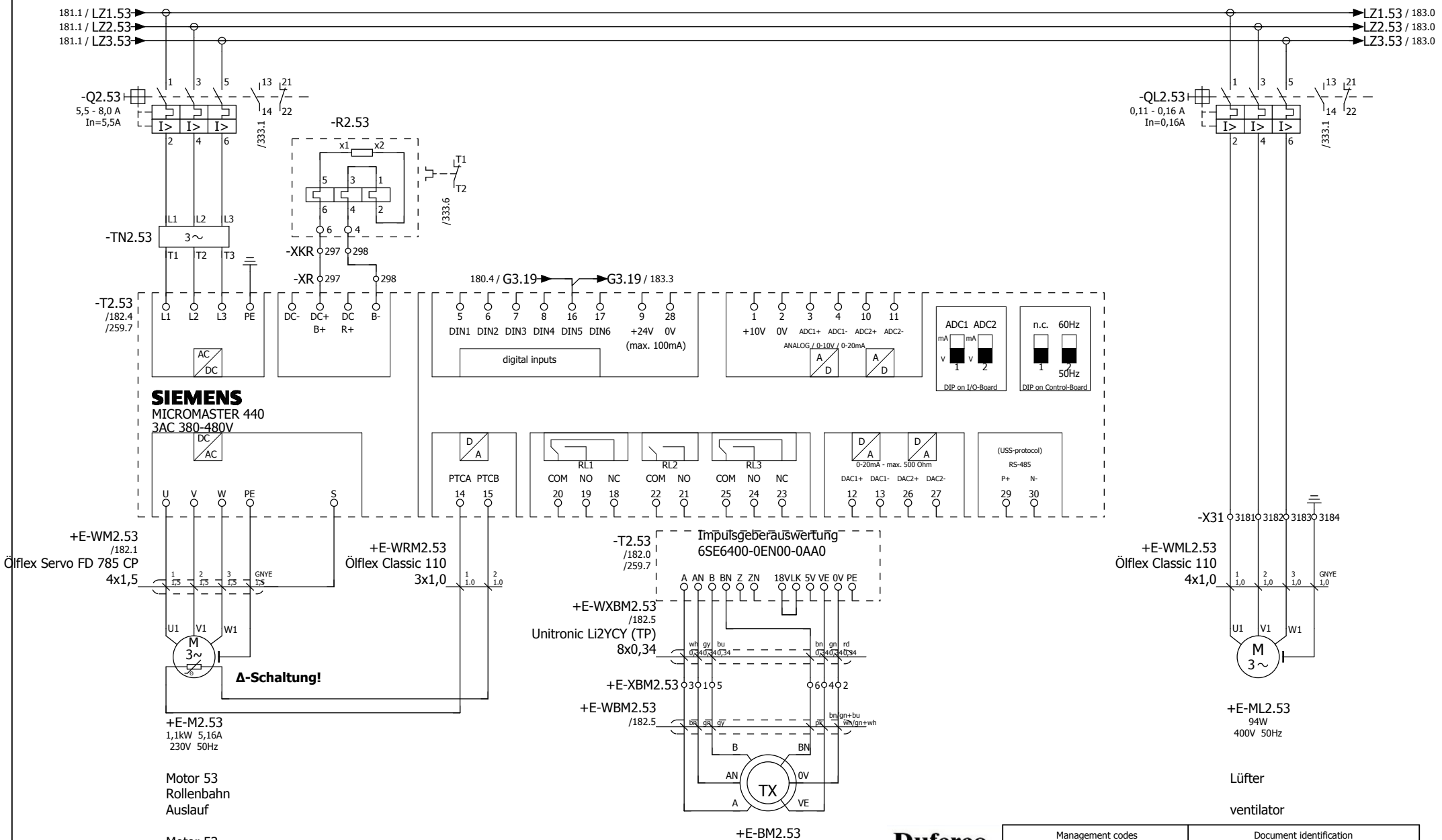

Management codes				Document identification				
5.3.0.0	CE	000	DW	QTPC	L04	ROSL	D	0049
System	Phase	Area	Typology	Project	Lot	Company	D/S	Number

181 183

Rev.	Date	Description	Prepared	Checked	Approved			
						Date	30.01.2012	
						Dus		

Duferco (SBM 2) Schaltschrank

in place of | Replaced by

RÖSLER finding a better way ...

load circuit
roll conveyor outlet M53

= ES
+ S

01-130070 00

Page 182
from 565

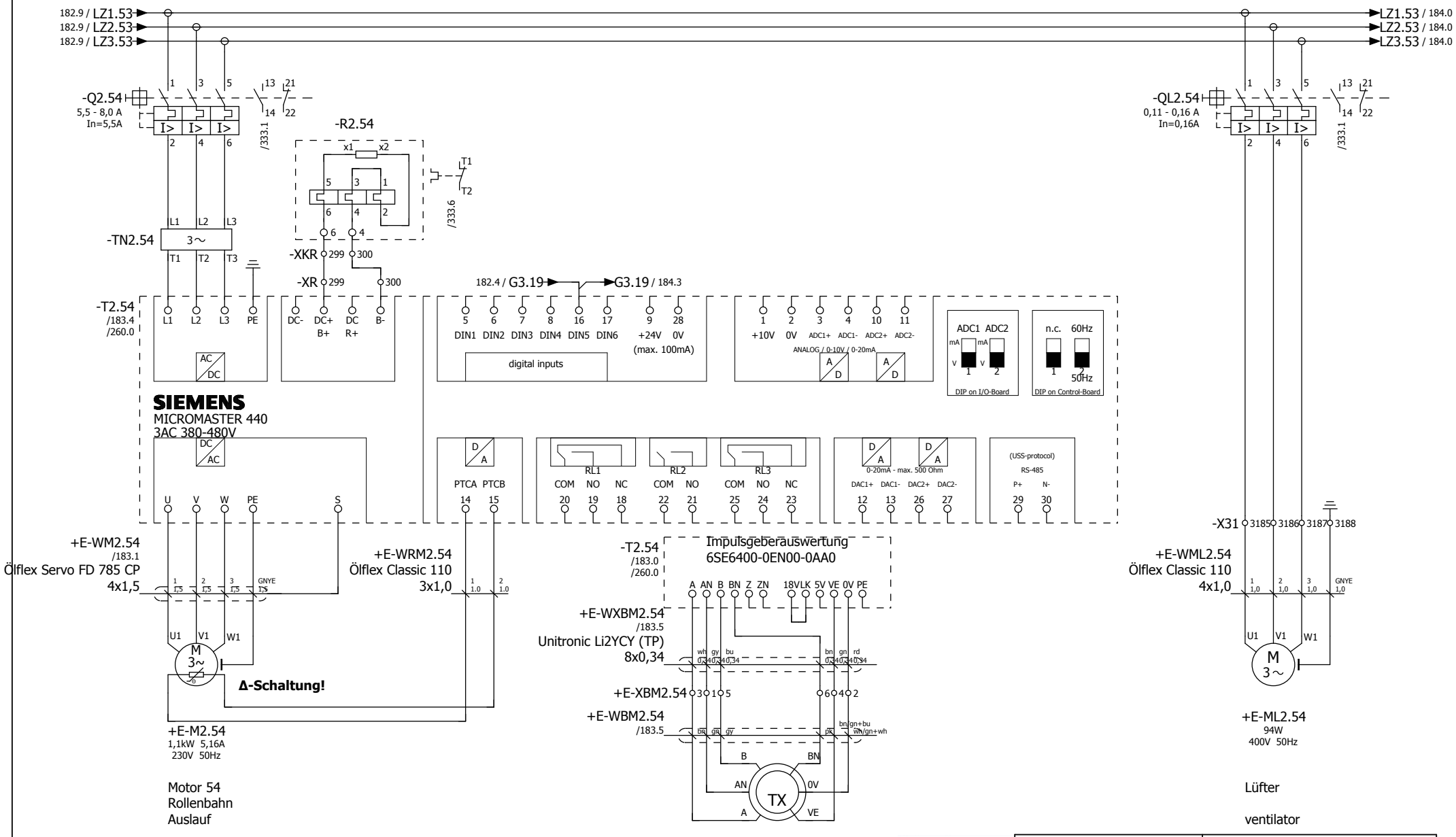

182

184

Management codes				Document identification				
5.3.0.0	CE	000	DW	QTPC	L04	ROSL	D	0049
System	Phase	Area	Typology	Project	Lot	Company	D/S	Number

						Date	30.01.2012	
						Dus		
Rev.	Date	Description	Prepared	Checked	Approved			

Duferco (SBM 2) Schaltschrank

in place of | Replaced by

RÖSLER finding a better way ...

load circuit
roll conveyor outlet M54

= ES
+ S

01-130070 00

Page 183
from 565

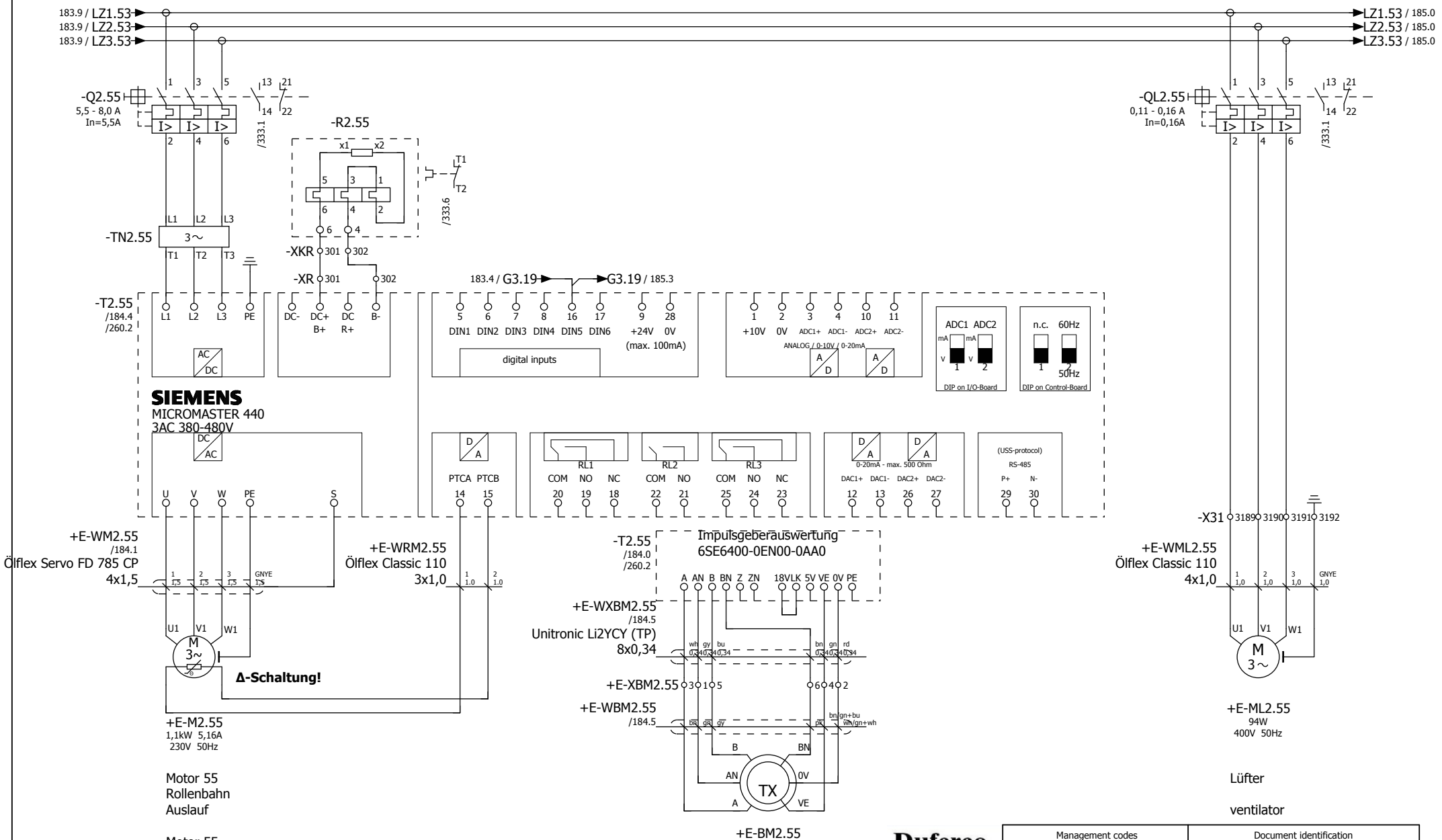

183

185

Management codes				Document identification				
5.3.0.0	CE	000	DW	QTPC	L04	ROSL	D	0049
System	Phase	Area	Typology	Project	Lot	Company	D/S	Number

Duferco Clabecq

Rev.	Date	Description	Prepared	Checked	Approved			
						Date	30.01.2012	
						Dus		

Duferco (SBM 2) Schaltschrank

in place of | Replaced by

RÖSLER finding a better way ...

load circuit
roll conveyor outlet M55

= ES
+ S

01-130070 00

Page 184
from 565

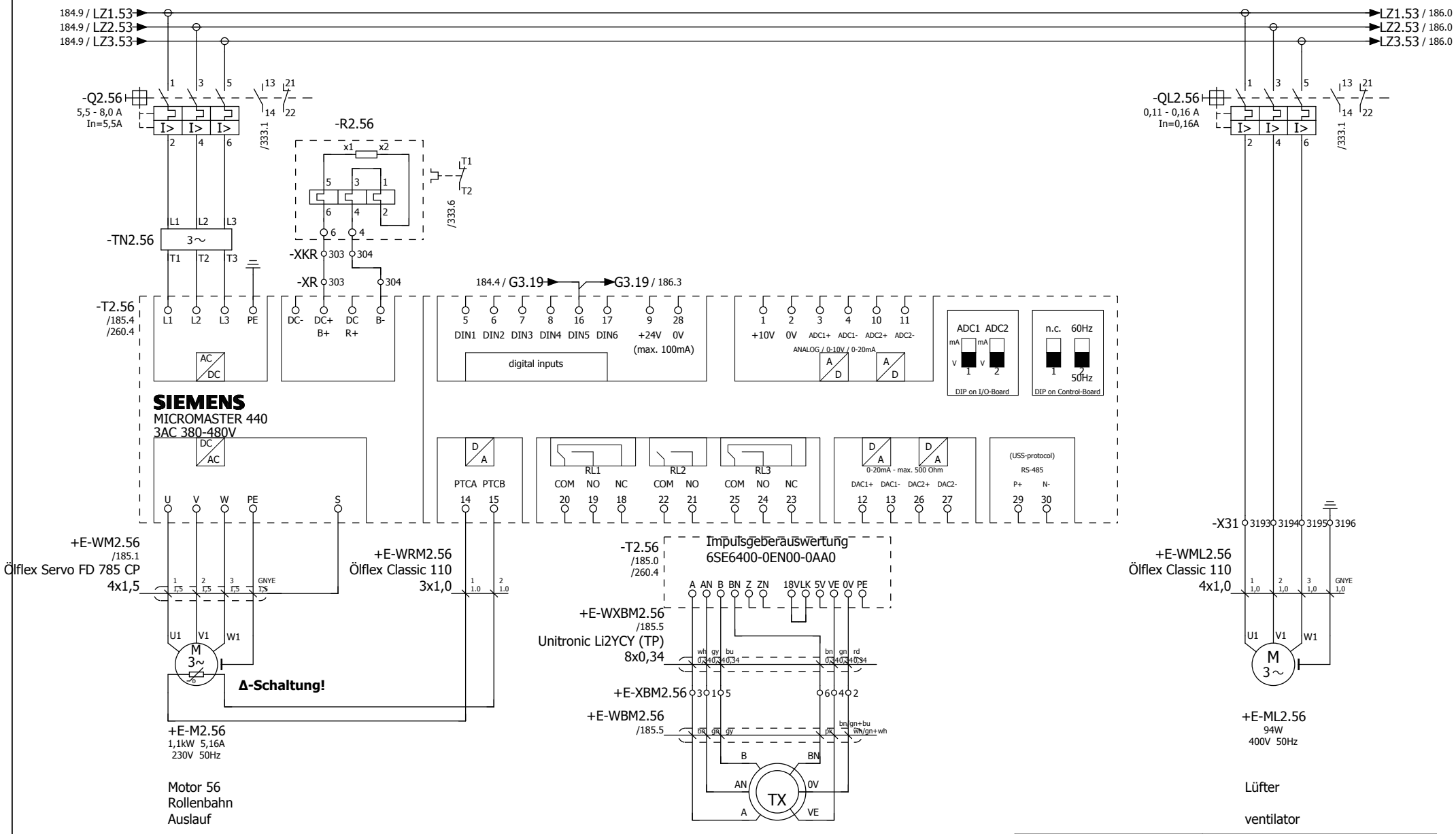

184

186

Management codes				Document identification				
5.3.0.0	CE	000	DW	QTPC	L04	ROSL	D	0049
System	Phase	Area	Typology	Project	Lot	Company	D/S	Number

Duferco Clabecq

Rev.	Date	Description	Prepared	Checked	Approved			
						Date	30.01.2012	
						Dus		

Duferco (SBM 2) Schaltschrank

in place of | Replaced by

RÖSLER finding a better way ...

load circuit
roll conveyor outlet M56

= ES
+ S

01-130070 00

Page 185
from 565

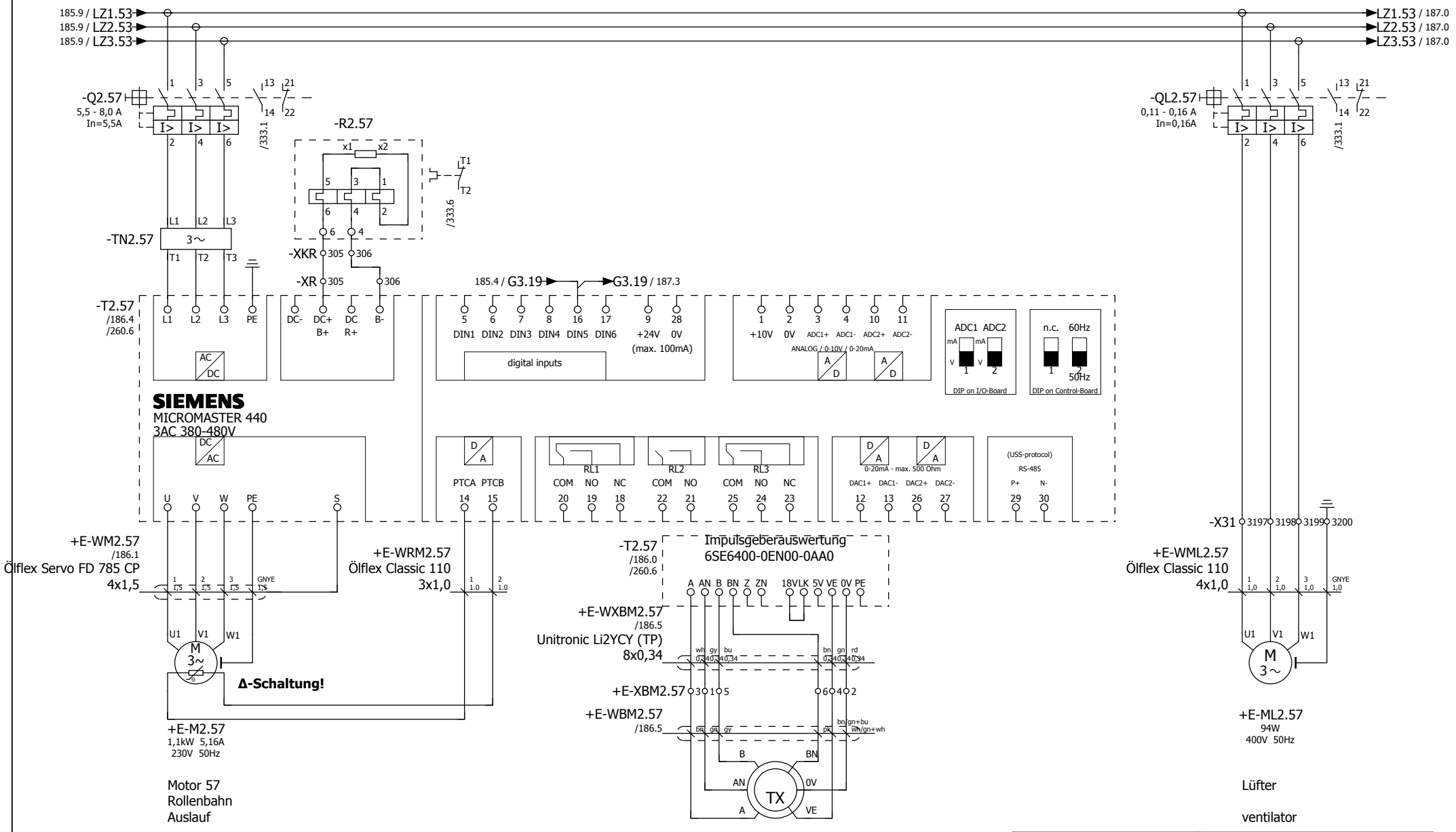

185

187

Management codes				Document identification				
5.3.0.0	CE	000	DW	QTPC	L04	ROSL	D	0049
System	Phase	Area	Typology	Project	Lot	Company	D/S	Number

Duferco Clabecq

Rev.	Date	Description	Prepared	Checked	Approved		
						Date	30.01.2012
						Dus	

Duferco (SBM 2) Schaltschrank

in place of | Replaced by

RÖSLER finding a better way ...

load circuit
roll conveyor outlet M57

= ES
+ S

01-130070 00

Page 186
from 565

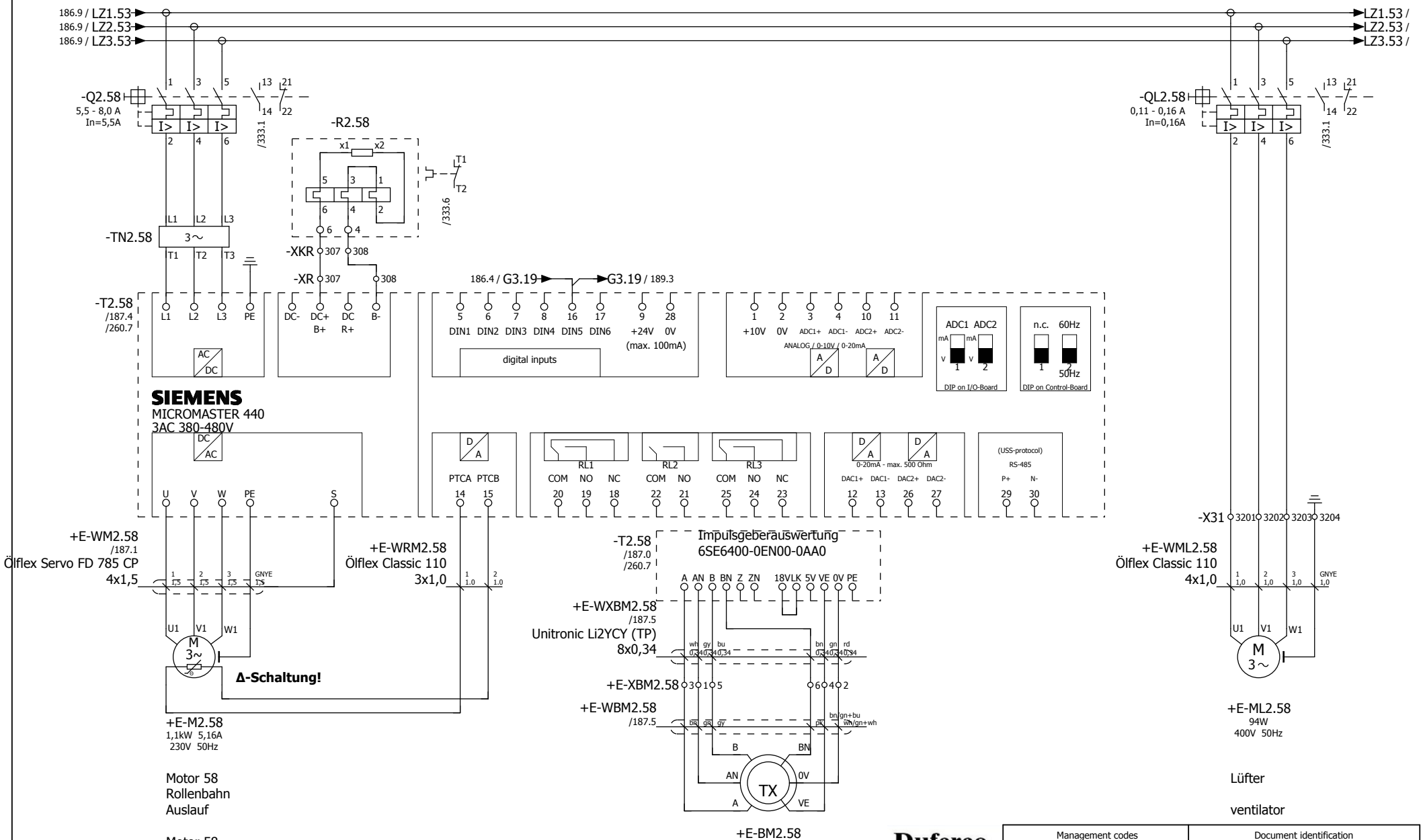

186

188

Management codes				Document identification				
5.3.0.0	CE	000	DW	QTPC	L04	ROSL	D	0049
System	Phase	Area	Typology	Project	Lot	Company	D/S	Number

Duferco Clabecq

Rev.	Date	Description	Prepared	Checked	Approved			
						Date	30.01.2012	
						Dus		

Duferco (SBM 2) Schaltschrank

in place of | Replaced by

RÖSLER finding a better way ...

load circuit
roll conveyor outlet M58

= ES
+ S

01-130070 00

Page 187
from 565

Zuleitung
Frequenzumrichter
Auslauf M59 - M63

input lead
frequency converter
outlet M59 - M63

Duferco Clabecq

Management codes				Document identification				
5.3.0.0	CE	000	DW	QTPC	L04	ROSL	D	0049
System	Phase	Area	Typology	Project	Lot	Company	D/S	Number

187 189

						Date	30.01.2012	
						Dus		
Rev.	Date	Description	Prepared	Checked	Approved			

Duferco (SBM 2) Schaltschrank
in place of | Replaced by

RÖSLER finding a better way ...

load circuit
input lead FU M59 - M63

= ES
+ S

01-130070 00

Page 188
from 565

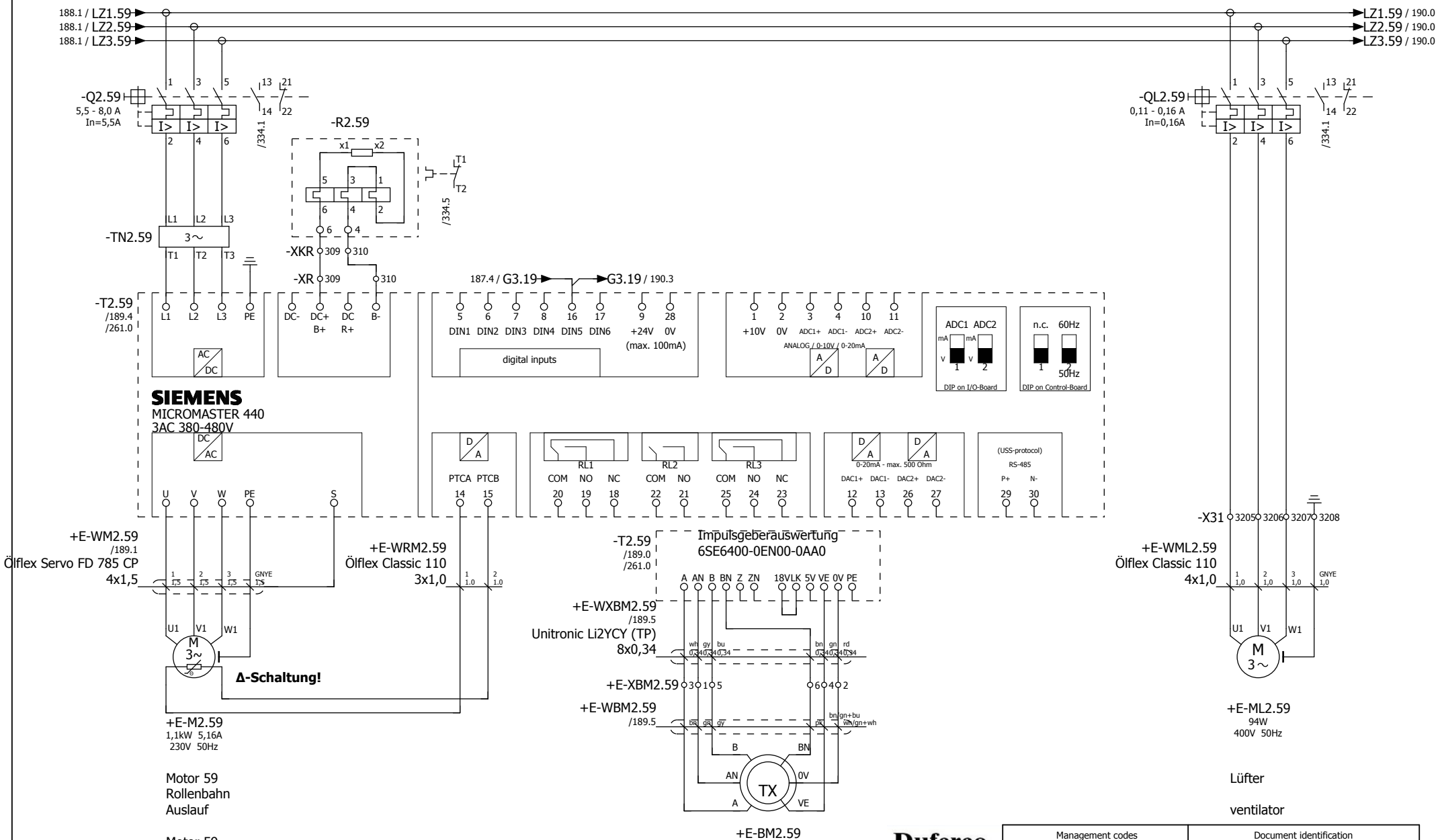

188

190

Management codes				Document identification				
5.3.0.0	CE	000	DW	QTPC	L04	ROSL	D	0049
System	Phase	Area	Typology	Project	Lot	Company	D/S	Number

Duferco Clabecq

Rev.	Date	Description	Prepared	Checked	Approved			
						Date	30.01.2012	
						Dus		

Duferco (SBM 2) Schaltschrank

in place of | Replaced by

RÖSLER finding a better way ...

load circuit
roll conveyor outlet M59

= ES
+ S

01-130070 00

Page 189
from 565

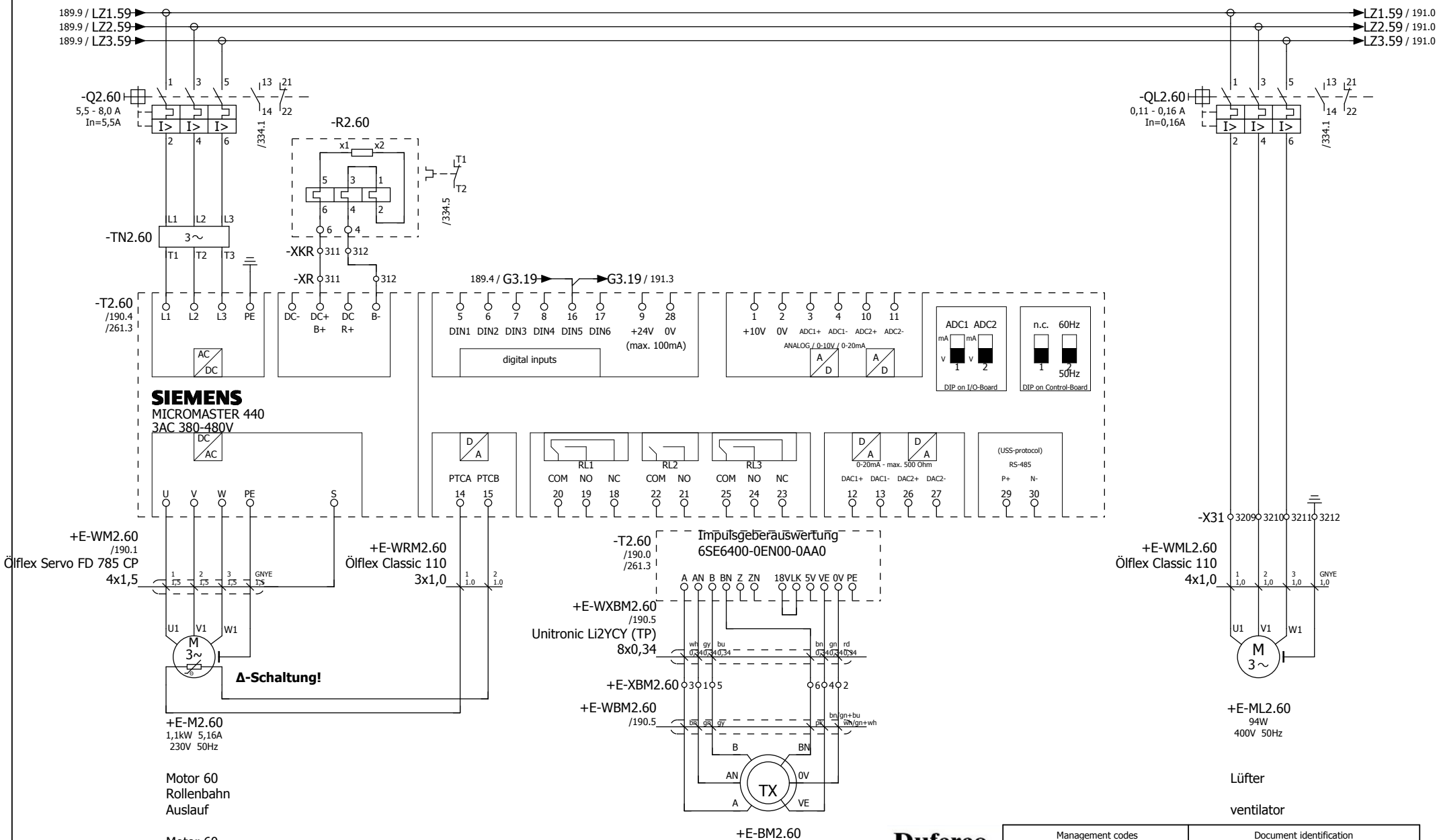

189

191

Management codes				Document identification				
5.3.0.0	CE	000	DW	QTPC	L04	ROSL	D	0049
System	Phase	Area	Typology	Project	Lot	Company	D/S	Number

Duferco Clabecq

Rev.	Date	Description	Prepared	Checked	Approved			
						Date	30.01.2012	
						Dus		

Duferco (SBM 2) Schaltschrank

in place of | Replaced by

RÖSLER finding a better way ...

load circuit
roll conveyor outlet M60

= ES
+ S

01-130070 00

Page 190
from 565

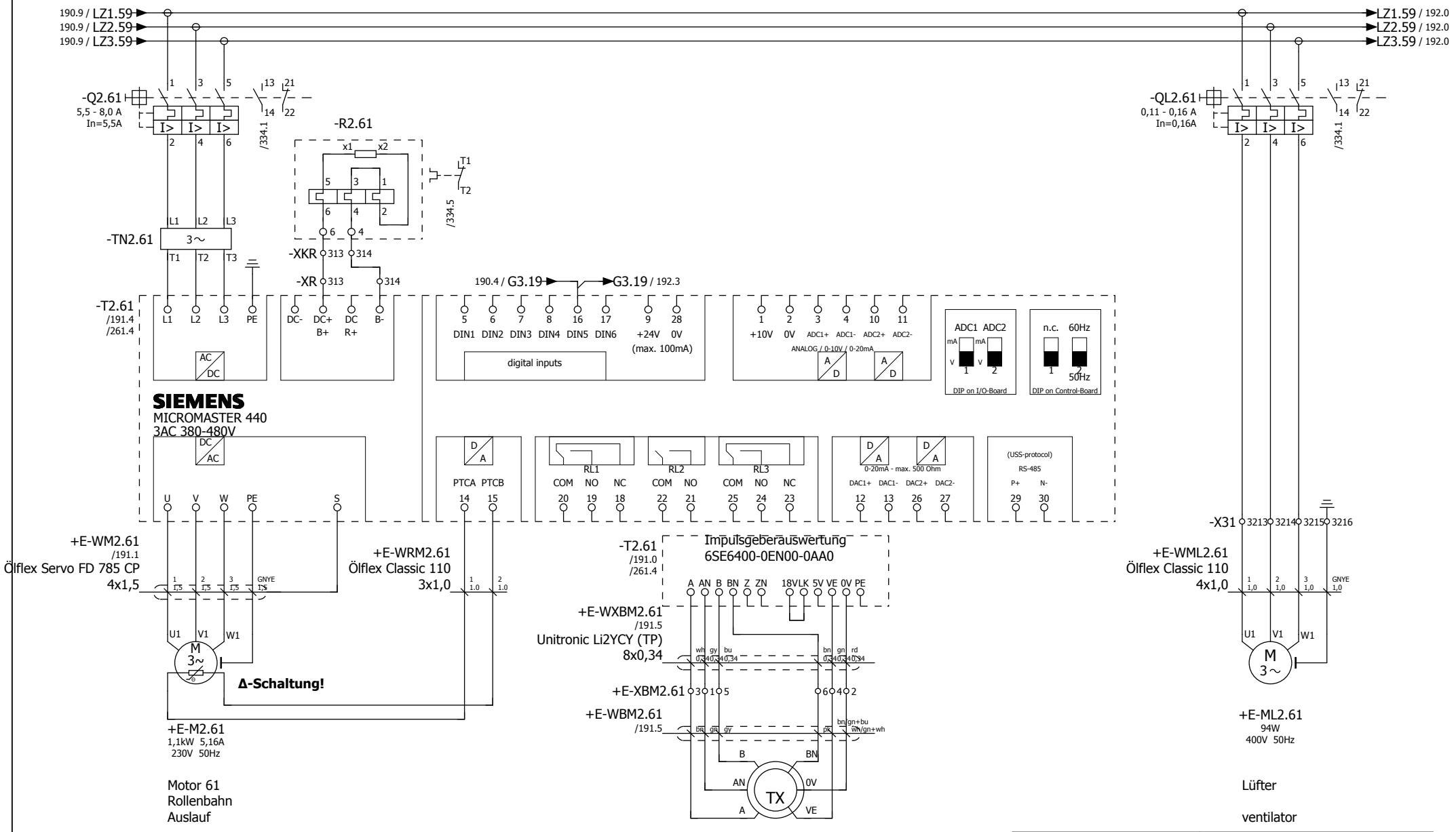

190

192

Management codes				Document identification				
5.3.0.0	CE	000	DW	QTPC	L04	ROSL	D	0049
System	Phase	Area	Typology	Project	Lot	Company	D/S	Number

Duferco Clabecq

Rev.	Date	Description	Prepared	Checked	Approved			
						Date	30.01.2012	
						Dus		

Duferco (SBM 2) Schaltschrank

in place of | Replaced by

RÖSLER finding a better way ...

load circuit
roll conveyor outlet M61

= ES
+ S

01-130070 00

Page 191
from 565

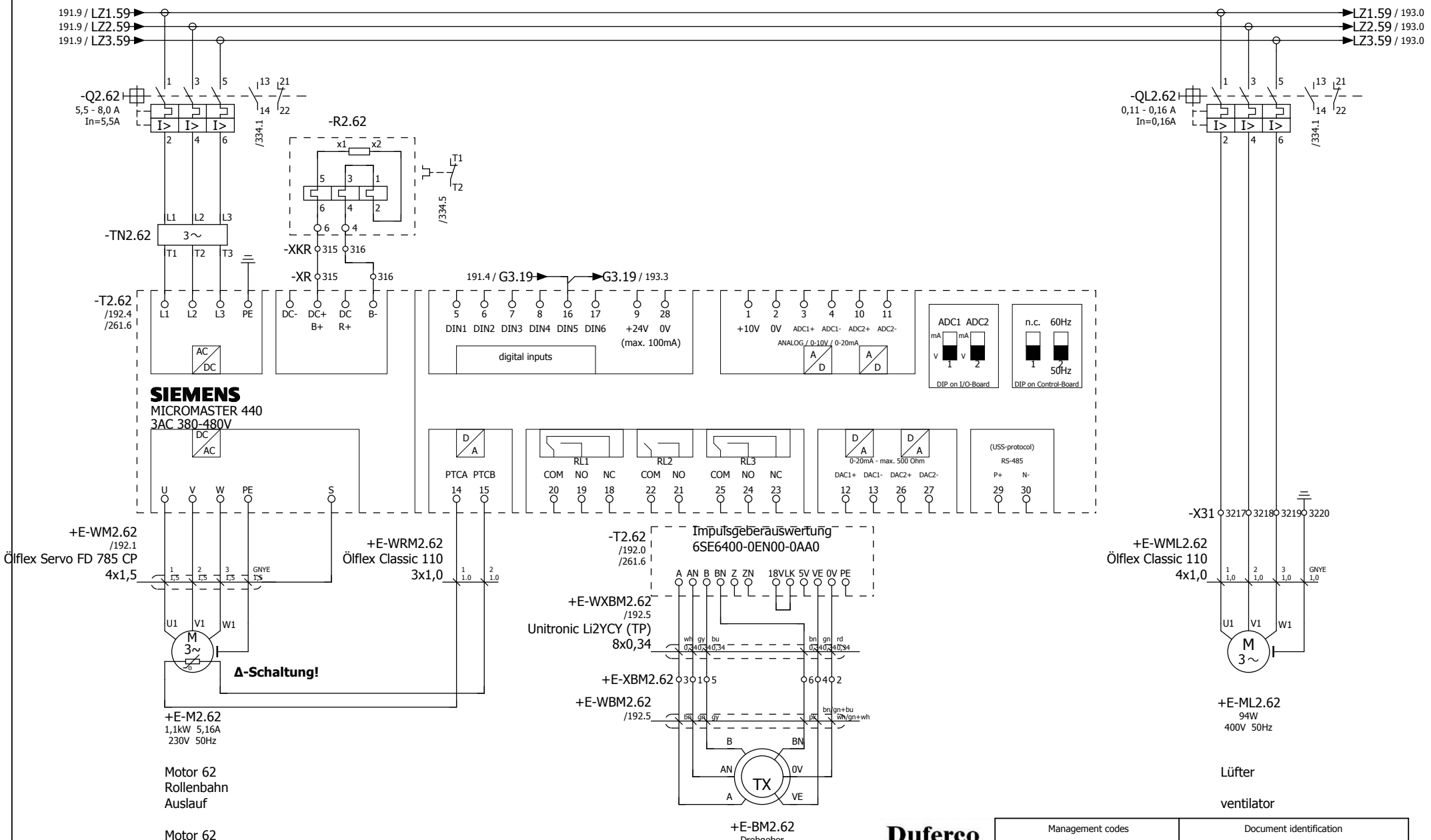

191

193

Duferco Clabecq

Management codes				Document identification				
5.3.0.0	CE	000	DW	QTPC	L04	ROSL	D	0049
System	Phase	Area	Typology	Project	Lot	Company	D/S	Number

Rev.	Date	Description	Prepared	Checked	Approved			
						Date	30.01.2012	
						Dus		

Duferco (SBM 2) Schaltschrank

in place of | Replaced by

RÖSLER finding a better way ...

load circuit
roll conveyor outlet M62

= ES
+ S

01-130070 00

Page 192
from 565

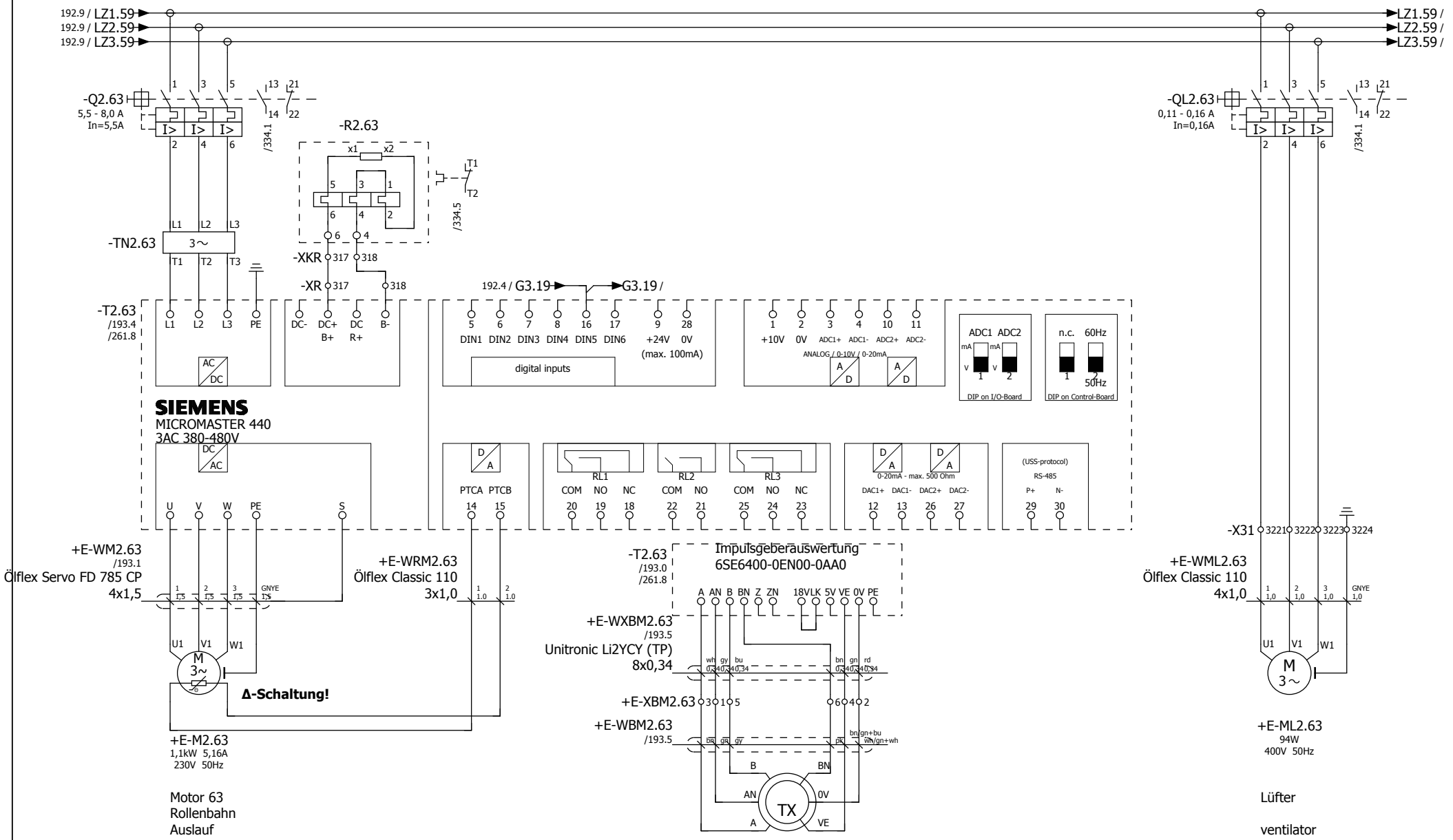

192

194

Duferco Clabecq

Management codes				Document identification				
5.3.0.0	CE	000	DW	QTPC	L04	ROSL	D	0049
System	Phase	Area	Typology	Project	Lot	Company	D/S	Number

						Date	30.01.2012	
						Dus		
Rev.	Date	Description	Prepared	Checked	Approved			

Duferco (SBM 2) Schaltschrank

in place of | Replaced by

RÖSLER finding a better way ...

load circuit
roll conveyor outlet M63

= ES
+ S

01-130070 00

Page 193
from 565

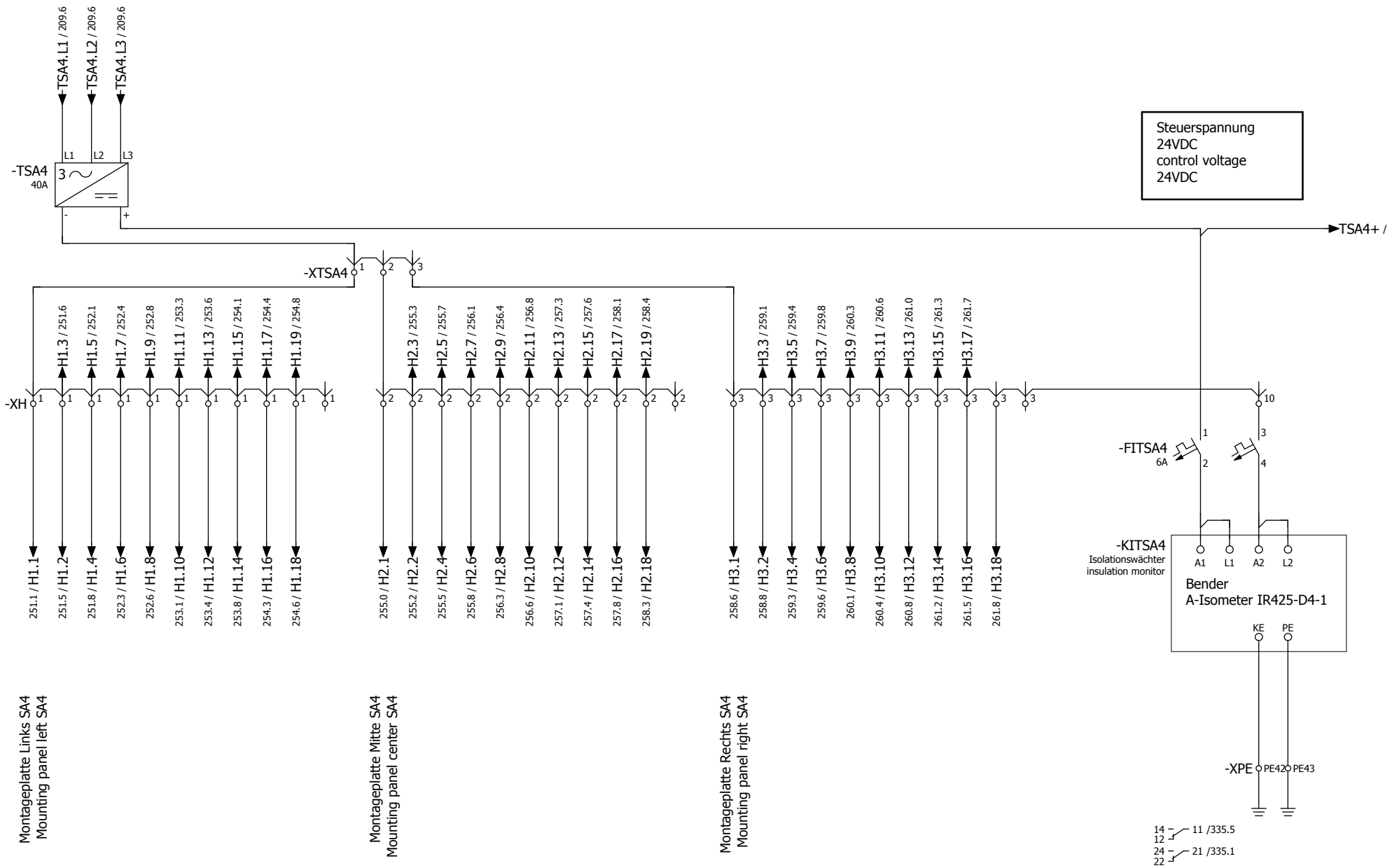

Duferco Clabecq

Management codes				Document identification				
5.3.0.0	CE	000	DW	QTPC	L04	ROSL	D	0049
System	Phase	Area	Typology	Project	Lot	Company	D/S	Number

193 195

Rev.	Date	Description	Prepared	Checked	Approved			
						Date	30.01.2012	
						Dus		
							Duferco (SBM 2) Schaltschrank	
							in place of	Replaced by

RÖSLER finding a better way ...

Control
Power supply unit SA4

= ES
+ S

01-130070 00

Page 194
from 565

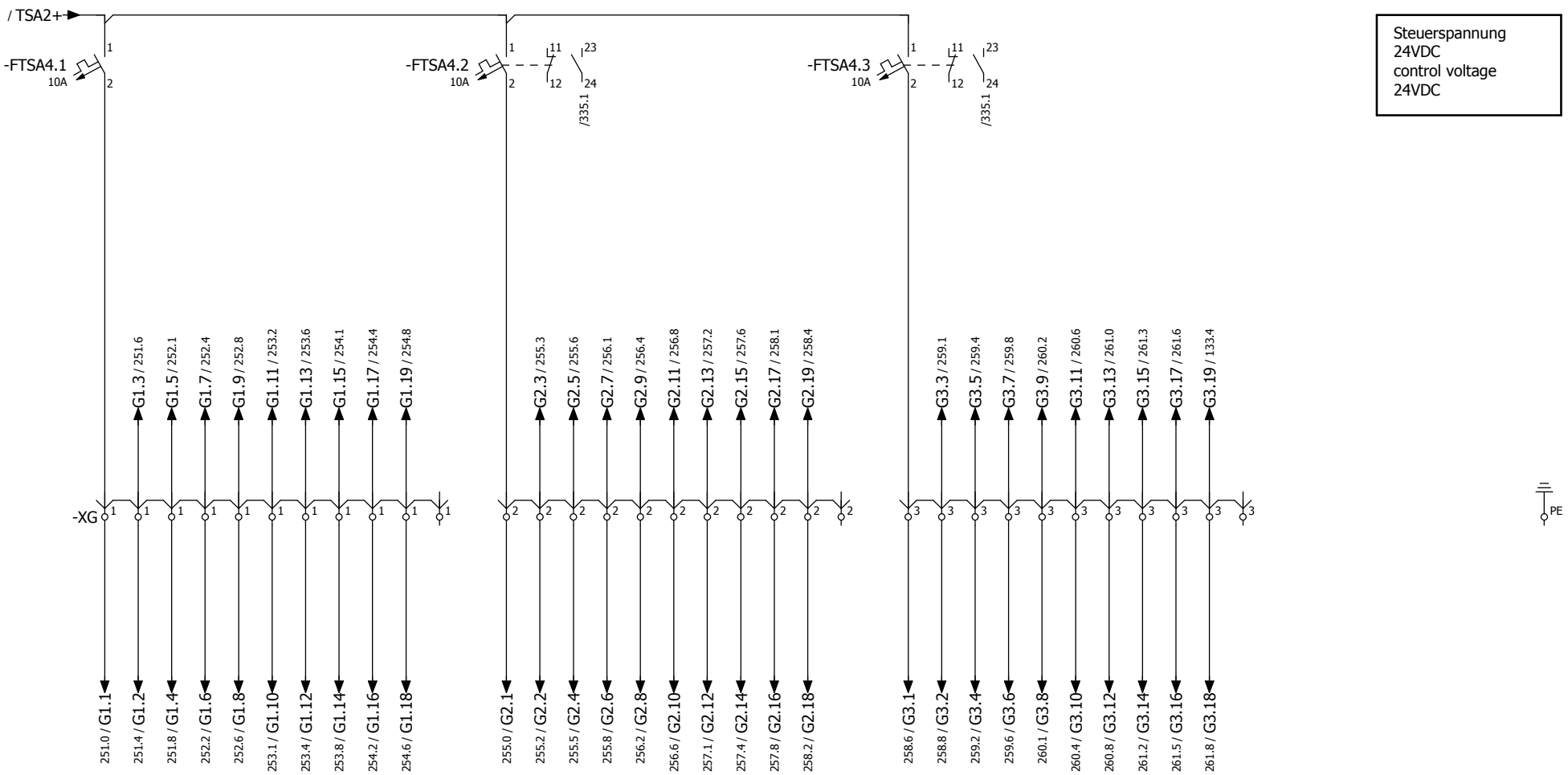

194

196

Management codes				Document identification				
5.3.0.0	CE	000	DW	QTPC	L04	ROSL	D	0049
System	Phase	Area	Typology	Project	Lot	Company	D/S	Number

Duferco Clabecq

Rev.	Date	Description	Prepared	Checked	Approved			
						Date	30.01.2012	
						Dus		

Duferco (SBM 2) Schaltschrank

in place of | Replaced by

RÖSLER finding a better way ...

Control
Power supply unit SA4

= ES
+ S

01-130070 00

Page 195
from 565

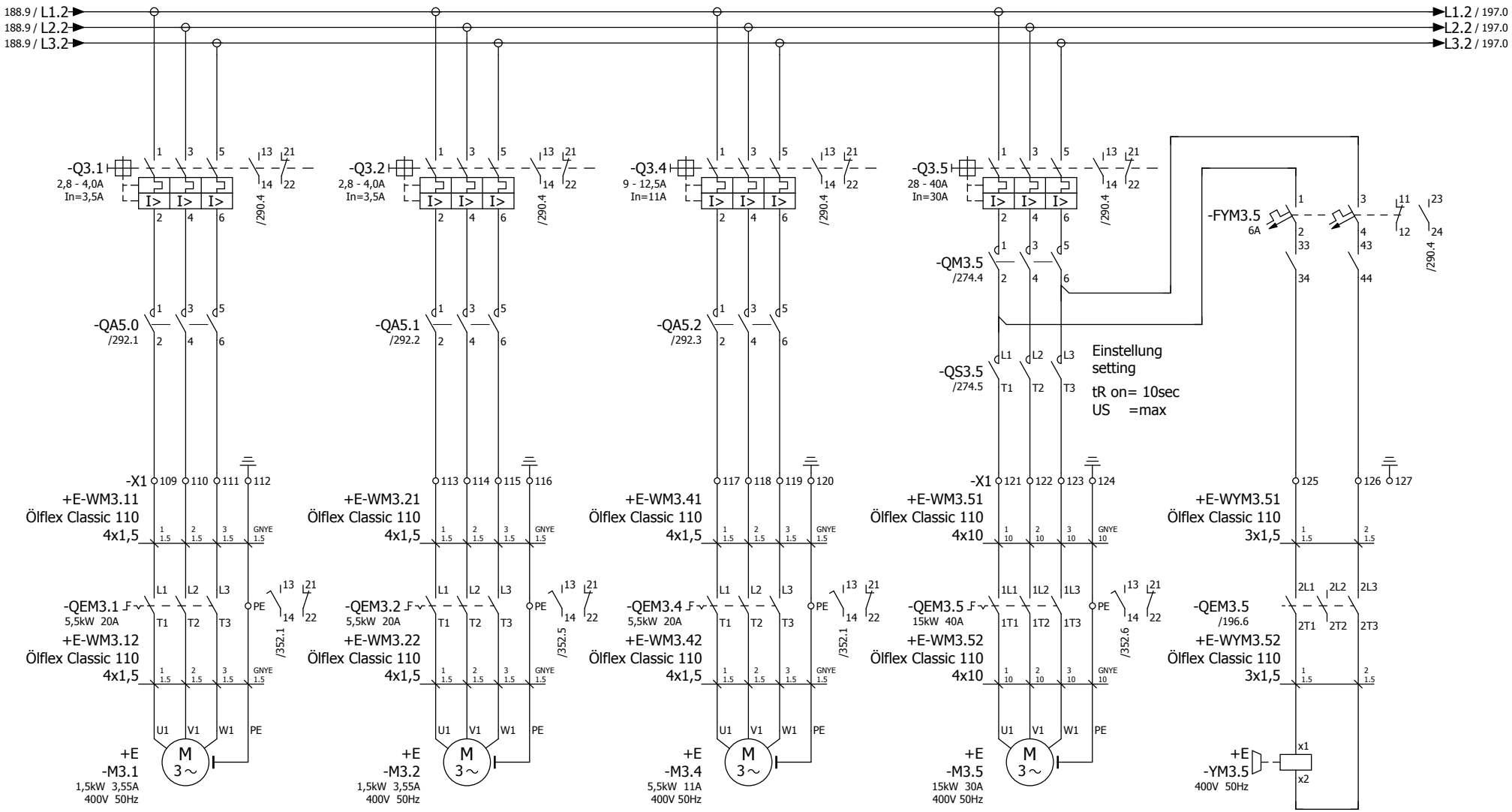

Förderschnecke 1
Strahlanlage längs

screw conveyor 1
Blasting installation
lengthwise

Förderschnecke 2
Strahlanlage längs

screw conveyor 2
Blasting installation
lengthwise

Förderschnecke
Strahlanlage quer unten

screw conveyor
blasting system across below

Becherwerk

bucket plant

Bremse

Brake

Duferco Clabecq

Management codes				Document identification				
5.3.0.0	CE	000	DW	QTPC	L04	ROSL	D	0049
System	Phase	Area	Typology	Project	Lot	Company	D/S	Number

195 197

Rev.	Date	Description	Prepared	Checked	Approved	Date 30.01.2012 Dus	Duferco (SBM 2) Schaltschrank	RÖSLER finding a better way ...	load circuit blast media	= ES + S	01-130070 00	Page 196 from 565
							in place of	Replaced by				

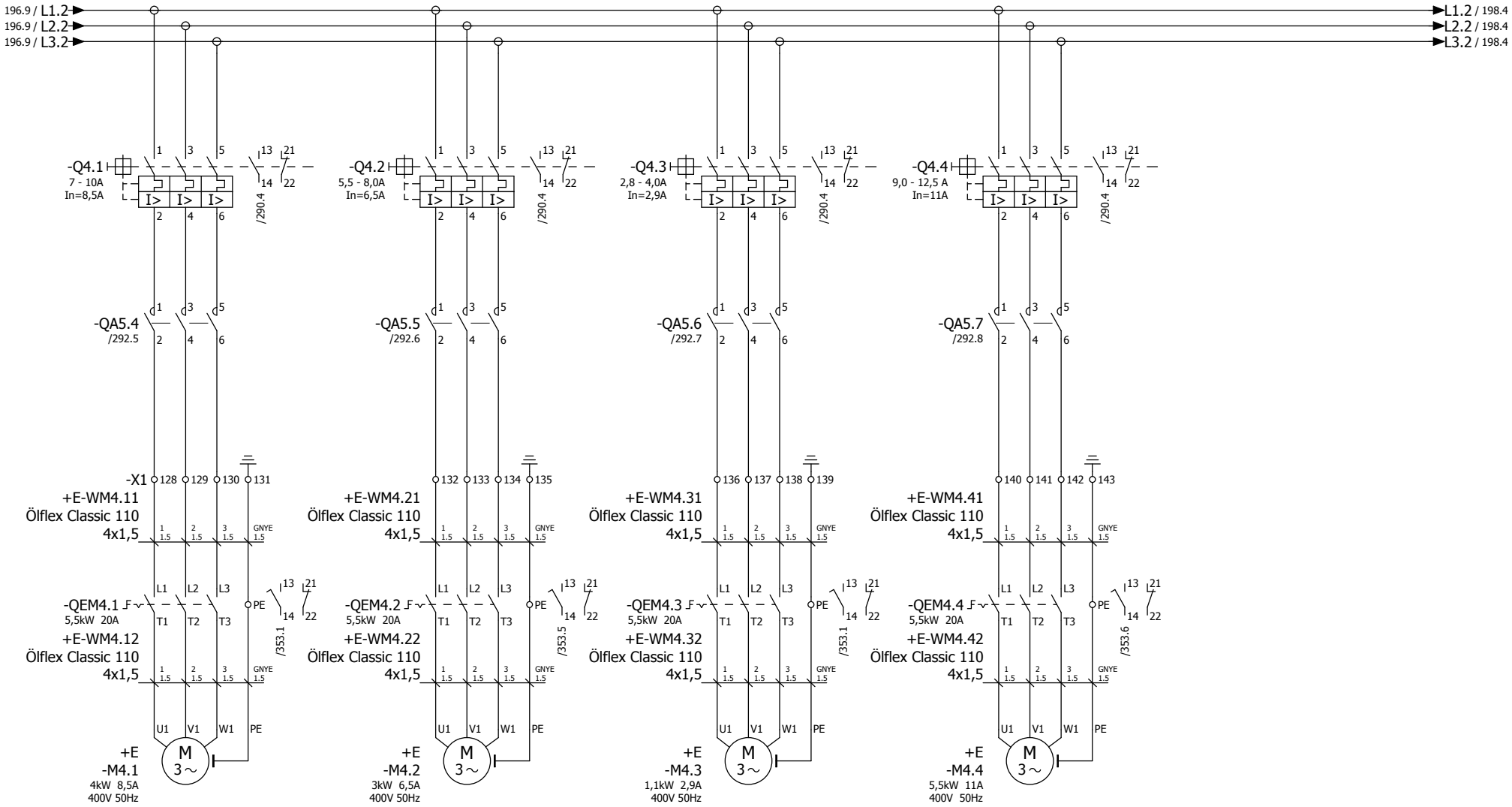

Förderschnecke
Strahlmittel Behälter

screw conveyor
blasting media vessel

Förderschnecke
Versorgung Schleuderrad unten

screw conveyor
supply blasting wheel below

Förderschnecke
Staub

screw conveyor
dust

Förderschnecke
Strahlanlage quer oben

screw conveyor
blasting system across above

Duferco Clabecq

Management codes				Document identification				
5.3.0.0	CE	000	DW	QTPC	L04	ROSL	D	0049
System	Phase	Area	Typology	Project	Lot	Company	D/S	Number

196 198

						Date	30.01.2012	
						Dus		
Rev.	Date	Description	Prepared	Checked	Approved			

Duferco (SBM 2) Schaltschrank
in place of | Replaced by

RÖSLER finding a better way ...

load circuit
blast media

= ES
+ S

01-130070 00

Page 197
from 565

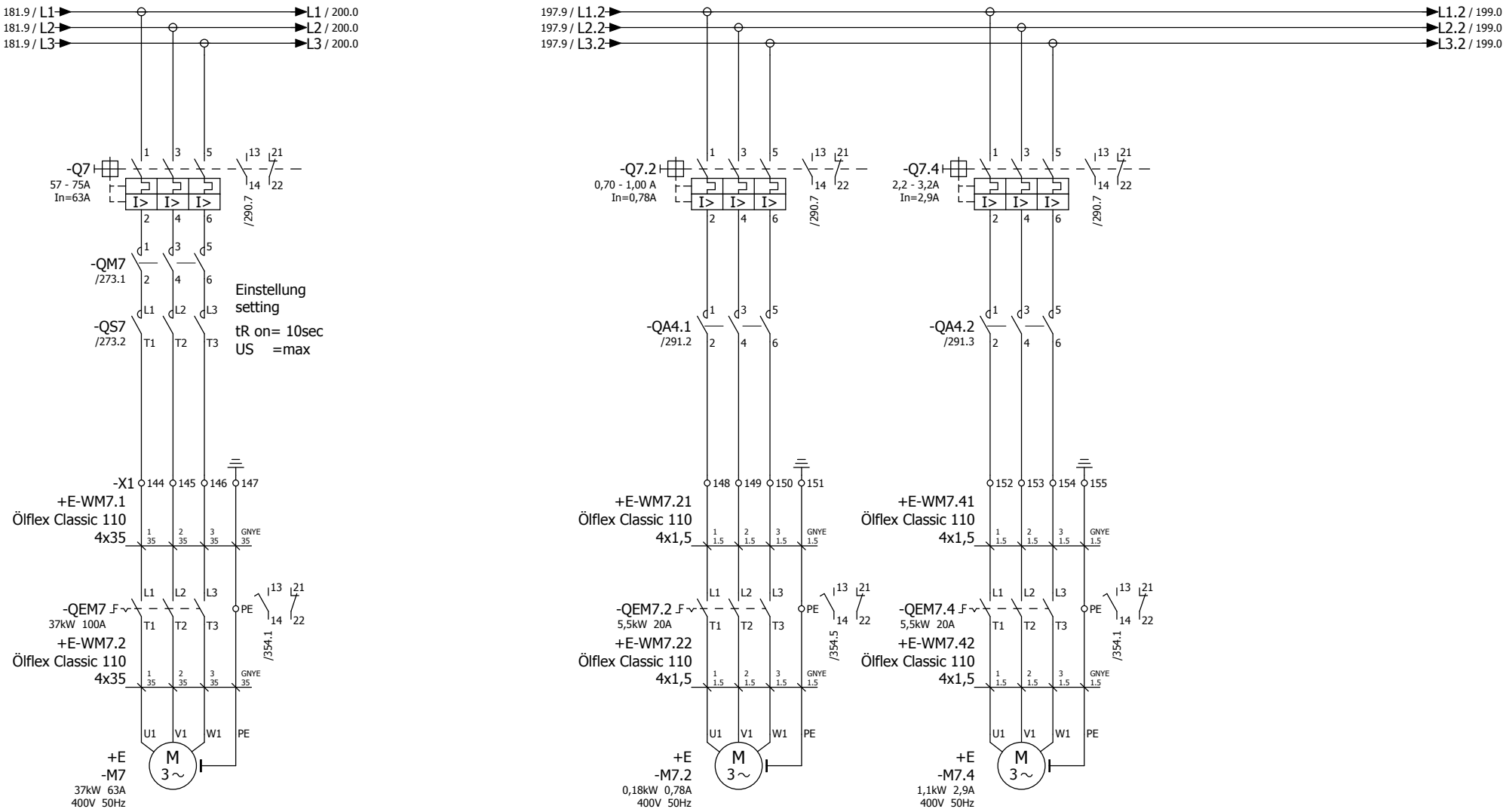

Motor
Filter

Motor
Filter

Zellenradschleuse

cell wheel gate

Förderschnecke
Filter entleeren

screw conveyor
Filter discharge

Duferco Clabecq

Management codes				Document identification				
5.3.0.0	CE	000	DW	QTPC	L04	ROSL	D	0049
System	Phase	Area	Typology	Project	Lot	Company	D/S	Number

197 199

Rev.	Date	Description	Prepared	Checked	Approved			
						Date	30.01.2012	
						Dus		

Duferco (SBM 2) Schaltschrank

in place of | Replaced by

RÖSLER finding a better way ...

load circuit
Filter

= ES
+ S

01-130070 00

Page 198
from 565

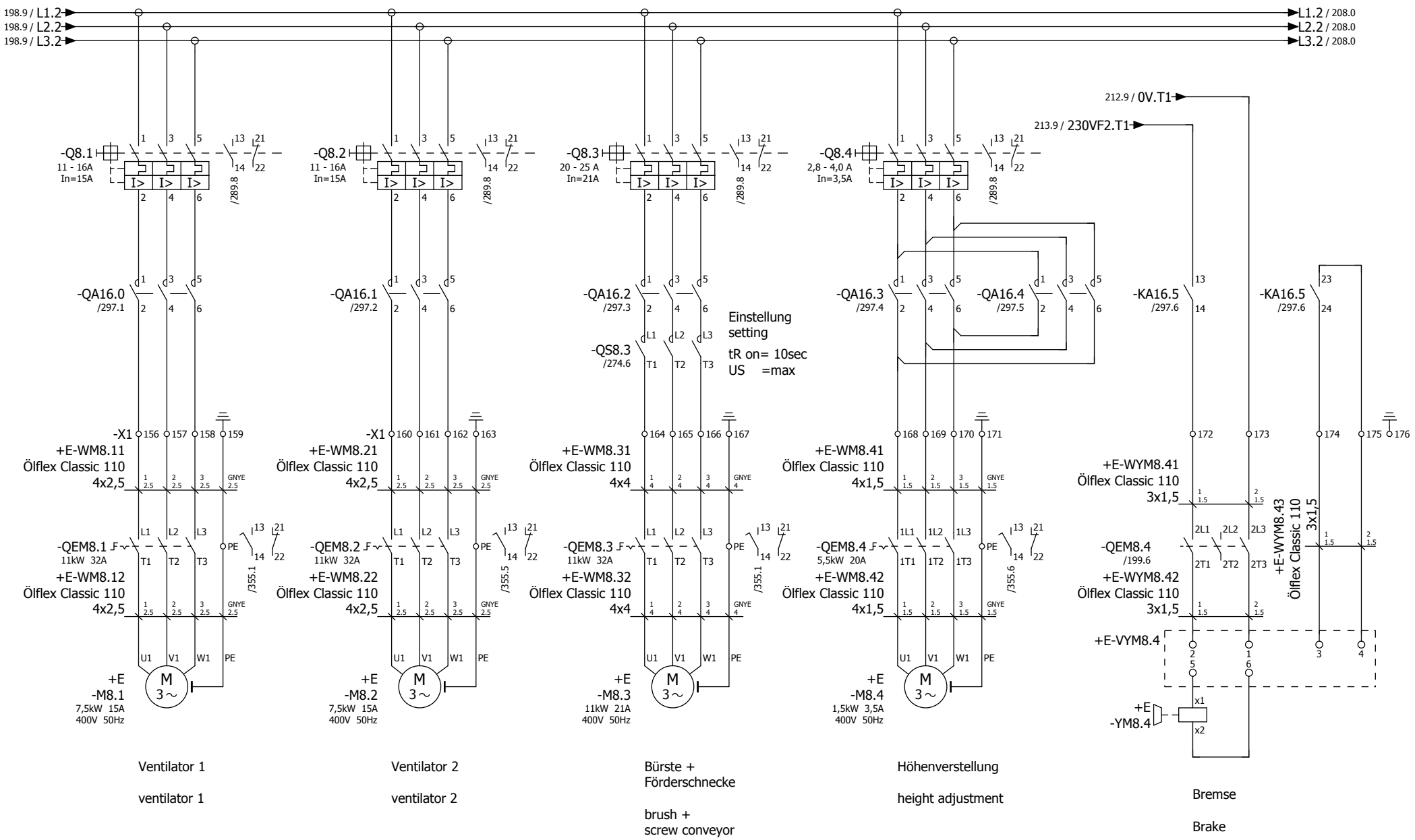

198

Duferco Clabecq

Management codes				Document identification				
5.3.0.0	CE	000	DW	QTPC	L04	ROSL	D	0049
System	Phase	Area	Typology	Project	Lot	Company	D/S	Number

200

						Date	30.01.2012	Duferco (SBM 2) Schaltschrank	
						Dus			
Rev.	Date	Description	Prepared	Checked	Approved			in place of	Replaced by

RÖSLER finding a better way ...

load circuit
cleaning station

= ES
+ S

01-130070 00

Page 199
from 565

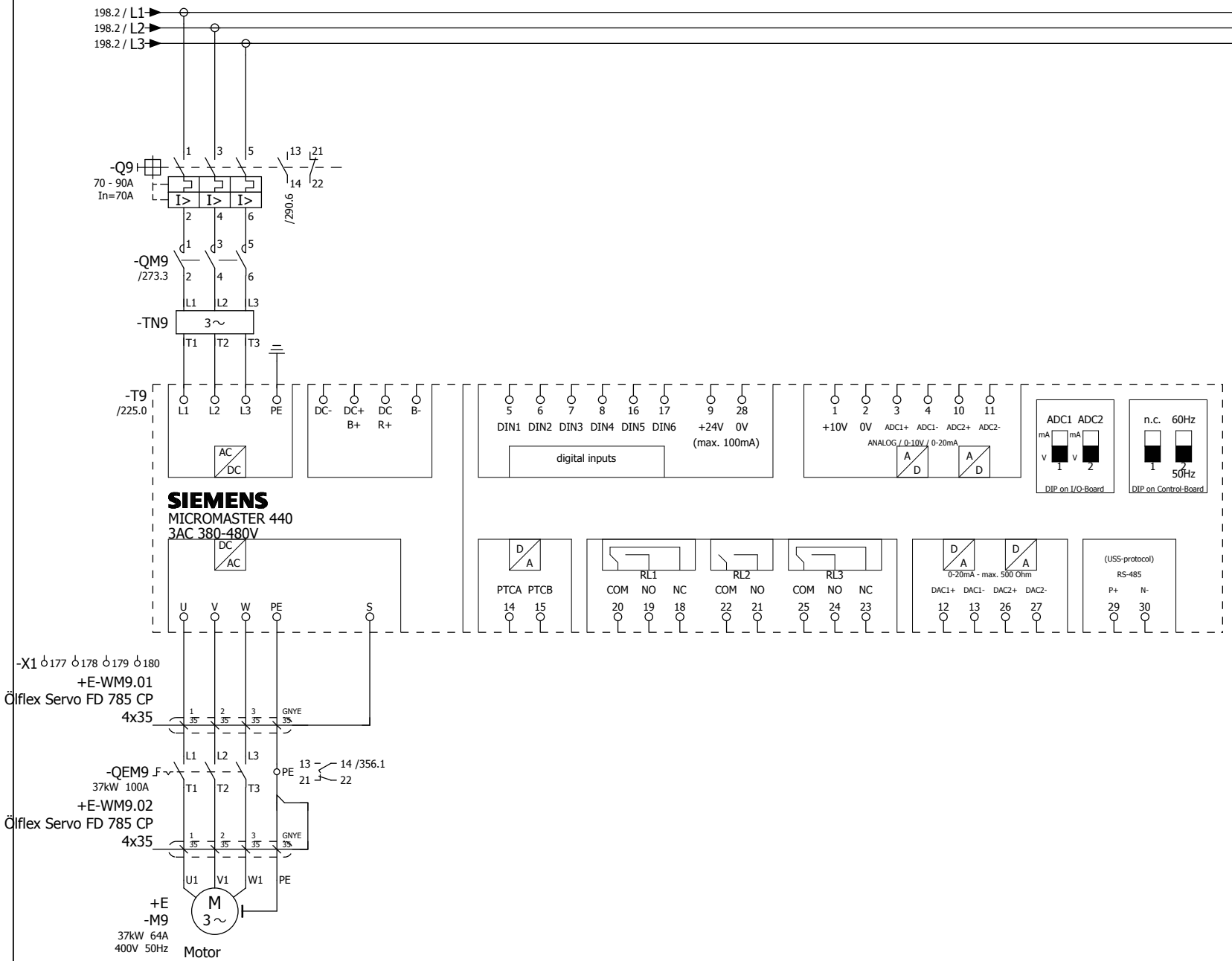

Parametereinstellungen parameter settings		
P0003	3	Zugriffsstufe User access level
P0005	22	Betriebsanzeige Display selection
P0010	1	Schnellinbetriebnahme Commissioning parameter
P0304	400	Motornennspannung Motor voltage rating
P0305	...	Motornennstrom Motor current rating
P0307	...	Motornennleistung Motor power rating
P0310	50	Motornennfrequenz Motor frequency rating
P0311	...	Motornenndrehzahl Motor speed rating
P1080	20	min. Frequenz min. frequency
P1082	50	max. Frequenz max. frequency
P1120	20	Hochlaufzeit run-up time
P1121	50	Bremszeit braking time
P2000	50	Bezugsfrequenz reference frequency
P3900	3	Ende Schnellinbetriebnahme End of quick commissioning
P0290	3	Umrichter-Überlastreaktion Inverter overload reaction
P0700	6	Wahl Befehlsquelle selcection of command source
P1000	6	Auswahl Frequenzsollwertquelle selection frequency set point source
P1210	5	Autom. Wiederanwahl automatic reselection
P0927	b::::::::	Eingabesperre lock entry

Duferco Clabecq

Management codes				Document identification				
5.3.0.0	CE	000	DW	QTPC	L04	ROSL	D	0049
System	Phase	Area	Typology	Project	Lot	Company	D/S	Number

Rev.	Date	Description	Prepared	Checked	Approved			
						Date	30.01.2012	
						Dus		

Duferco (SBM 2) Schaltschrank

in place of | Replaced by

RÖSLER finding a better way ...

load circuit
blasting wheel 1

= ES
+ S

01-130070 00

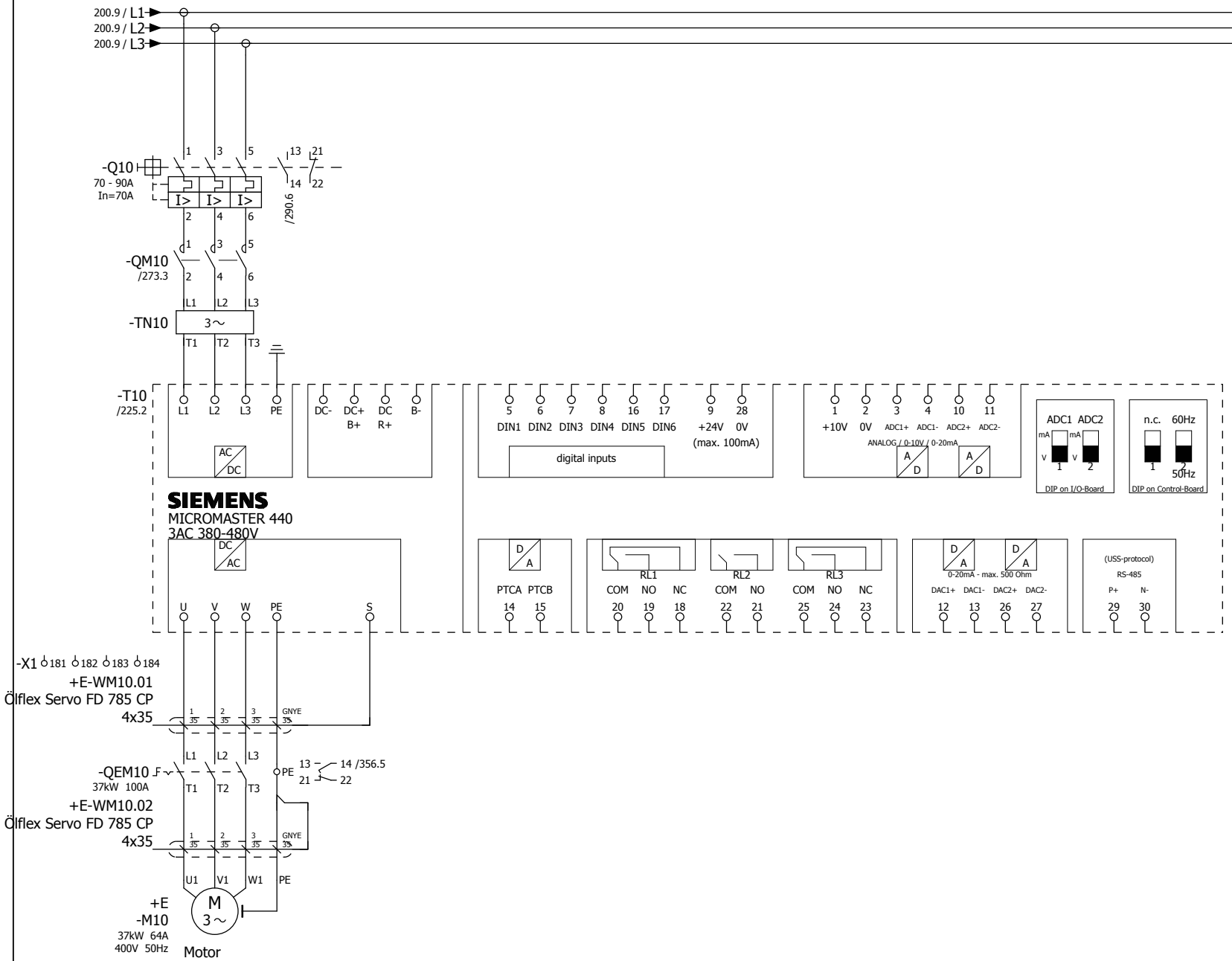

Parametereinstellungen parameter settings		
P0003	3	Zugriffsstufe User access level
P0005	22	Betriebsanzeige Display selection
P0010	1	Schnellinbetriebnahme Commissioning parameter
P0304	400	Motornennspannung Motor voltage rating
P0305	...	Motornennstrom Motor current rating
P0307	...	Motornennleistung Motor power rating
P0310	50	Motornennfrequenz Motor frequency rating
P0311	...	Motornenndrehzahl Motor speed rating
P1080	20	min. Frequenz min. frequency
P1082	50	max. Frequenz max. frequency
P1120	20	Hochlaufzeit run-up time
P1121	50	Bremszeit braking time
P2000	50	Bezugsfrequenz reference frequency
P3900	3	Ende Schnellinbetriebnahme End of quick commissioning
P0290	3	Umrichter-Überlastreaktion Inverter overload reaction
P0700	6	Wahl Befehlsquelle selcection of command source
P1000	6	Auswahl Frequenzsollwertquelle selection frequency set point source
P1210	5	Autom. Wiederanwahl automatic reselection
P0927	b::::::::	Eingabesperre lock entry

Duferco Clabecq

Management codes				Document identification				
5.3.0.0	CE	000	DW	QTPC	L04	ROSL	D	0049
System	Phase	Area	Typology	Project	Lot	Company	D/S	Number

200 202

Rev.	Date	Description	Prepared	Checked	Approved	Date 30.01.2012	Duferco (SBM 2) Schaltschrank	RÖSLER finding a better way ...	load circuit blasting wheel 2	= ES + S	01-130070 00	Page 201 from 565
						Dus	in place of	Replaced by				

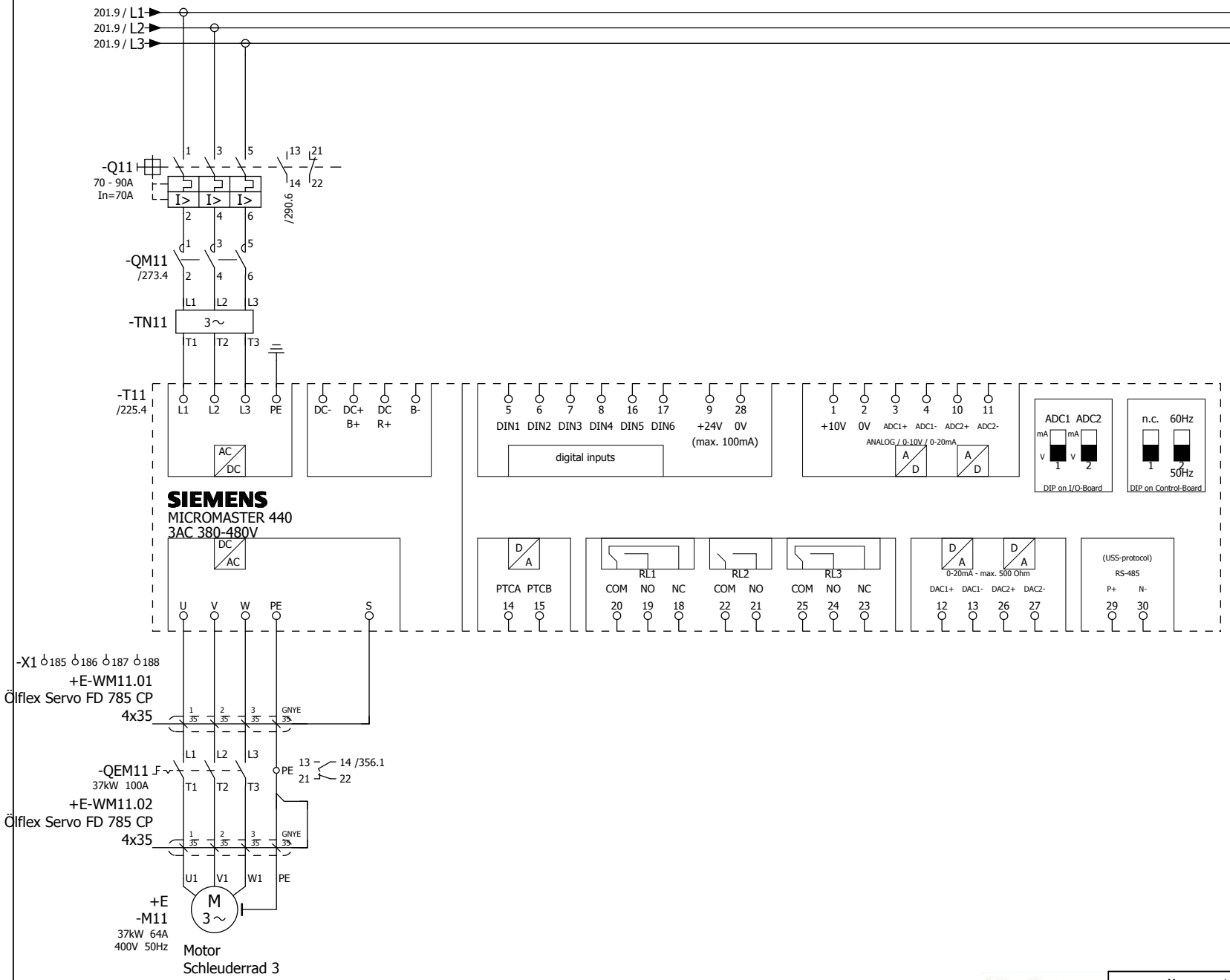

Parametereinstellungen parameter settings		
P0003	3	Zugriffsstufe User access level
P0005	22	Betriebsanzeige Display selection
P0010	1	Schnellinbetriebnahme Commissioning parameter
P0304	400	Motornennspannung Motor voltage rating
P0305	...	Motornennstrom Motor current rating
P0307	...	Motornennleistung Motor power rating
P0310	50	Motornennfrequenz Motor frequency rating
P0311	...	Motornenndrehzahl Motor speed rating
P1080	20	min. Frequenz min. frequency
P1082	50	max. Frequenz max. frequency
P1120	20	Hochlaufzeit run-up time
P1121	50	Bremszeit braking time
P2000	50	Bezugsfrequenz reference frequency
P3900	3	Ende Schnellinbetriebnahme End of quick commissioning
P0290	3	Umrichter-Überlastreaktion Inverter overload reaction
P0700	6	Wahl Befehlsquelle selcection of command source
P1000	6	Auswahl Frequenzsollwertquelle selection frequency set point source
P1210	5	Autom. Wiederanwahl automatic reselection
P0927	b::::::::	Eingabesperre lock entry

Duferco Clabecq

Management codes				Document identification				
5.3.0.0	CE	000	DW	QTPC	L04	ROSL	D	0049
System	Phase	Area	Typology	Project	Lot	Company	D/S	Number

201 203

Rev.	Date	Description	Prepared	Checked	Approved	Date 30.01.2012 Dus	Duferco (SBM 2) Schaltschrank in place of	Replaced by

RÖSLER finding a better way ...

load circuit
blasting wheel 3

= ES
+ S

01-130070 00

Page 202
from 565

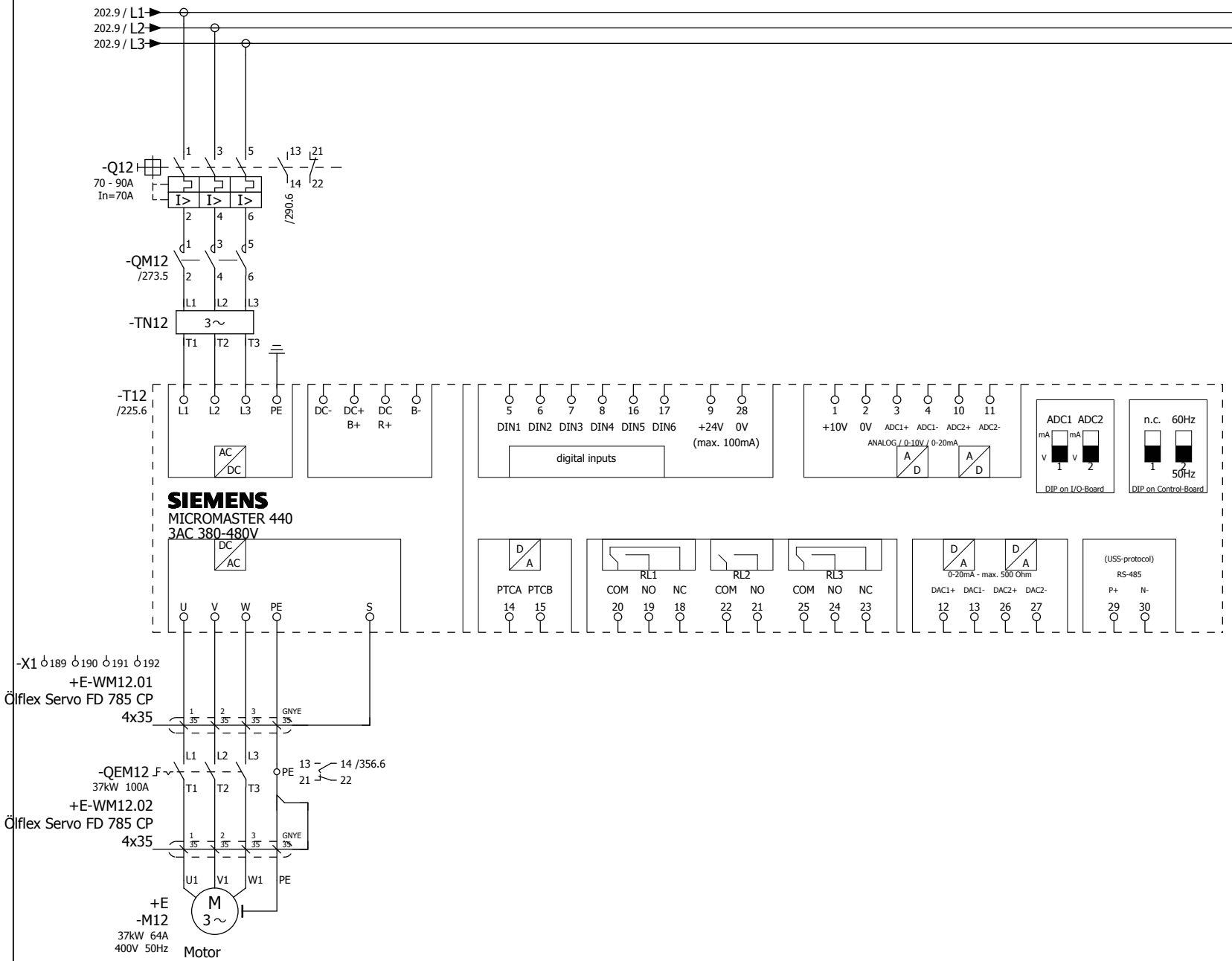

Parametereinstellungen parameter settings		
P0003	3	Zugriffsstufe User access level
P0005	22	Betriebsanzeige Display selection
P0010	1	Schnellinbetriebnahme Commissioning parameter
P0304	400	Motornennspannung Motor voltage rating
P0305	...	Motornennstrom Motor current rating
P0307	...	Motornennleistung Motor power rating
P0310	50	Motornennfrequenz Motor frequency rating
P0311	...	Motornenndrehzahl Motor speed rating
P1080	20	min. Frequenz min. frequency
P1082	50	max. Frequenz max. frequency
P1120	20	Hochlaufzeit run-up time
P1121	50	Bremszeit braking time
P2000	50	Bezugsfrequenz reference frequency
P3900	3	Ende Schnellinbetriebnahme End of quick commissioning
P0290	3	Umrichter-Überlastreaktion Inverter overload reaction
P0700	6	Wahl Befehlsquelle selcection of command source
P1000	6	Auswahl Frequenzsollwertquelle selection frequency set point source
P1210	5	Autom. Wiederanwahl automatic reselection
P0927	b::::::::	Eingabesperre lock entry

Duferco Clabecq

Management codes				Document identification				
5.3.0.0	CE	000	DW	QTPC	L04	ROSL	D	0049
System	Phase	Area	Typology	Project	Lot	Company	D/S	Number

Rev.	Date	Description	Prepared	Checked	Approved			
						Date	30.01.2012	
						Dus		

Duferco (SBM 2) Schaltschrank
in place of | Replaced by

RÖSLER finding a better way ...

load circuit
blasting wheel 4

= ES
+ S

01-130070 00

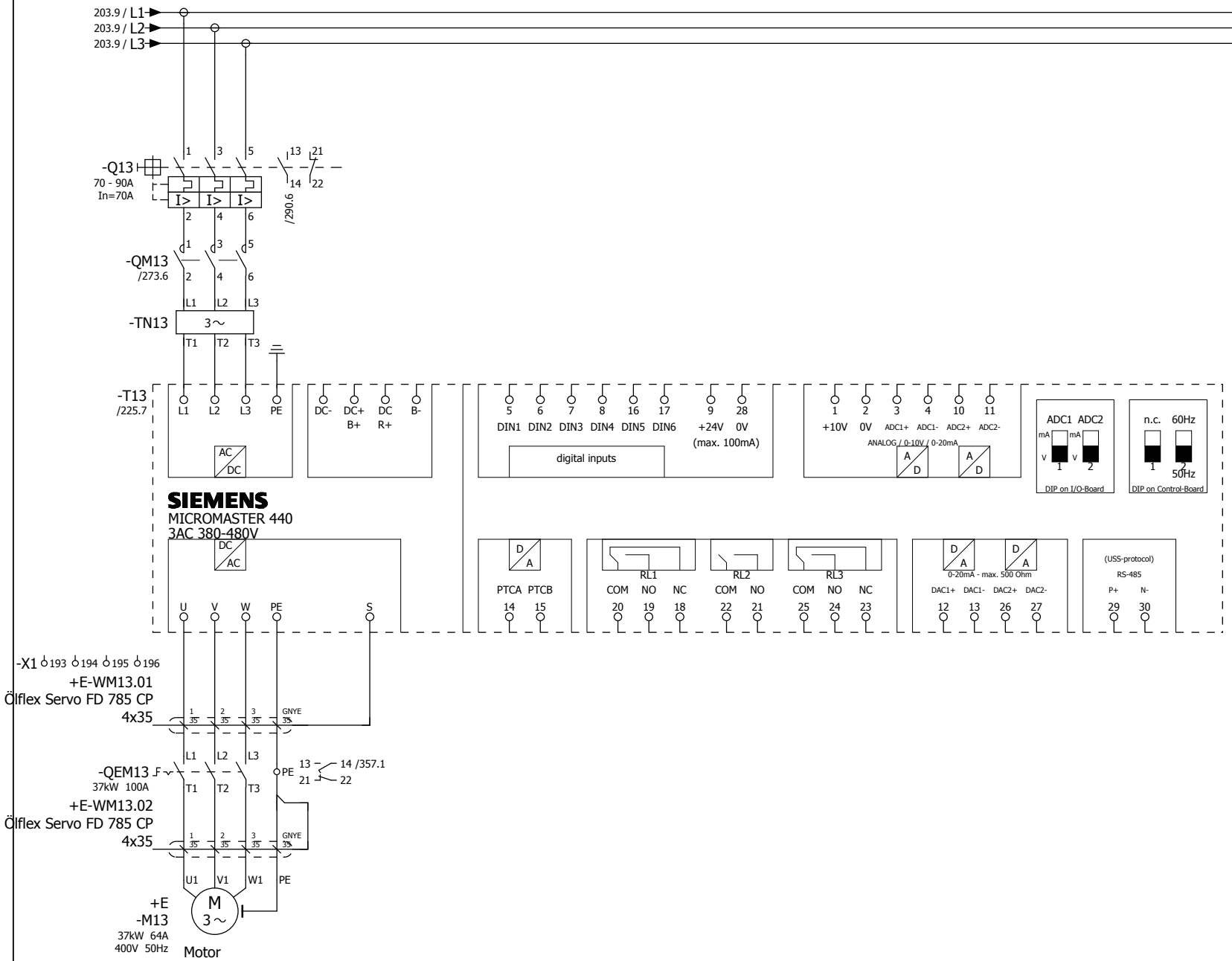

Parametereinstellungen parameter settings		
P0003	3	Zugriffsstufe User access level
P0005	22	Betriebsanzeige Display selection
P0010	1	Schnellinbetriebnahme Commissioning parameter
P0304	400	Motornennspannung Motor voltage rating
P0305	...	Motornennstrom Motor current rating
P0307	...	Motornennleistung Motor power rating
P0310	50	Motornennfrequenz Motor frequency rating
P0311	...	Motornenndrehzahl Motor speed rating
P1080	20	min. Frequenz min. frequency
P1082	50	max. Frequenz max. frequency
P1120	20	Hochlaufzeit run-up time
P1121	50	Bremszeit braking time
P2000	50	Bezugsfrequenz reference frequency
P3900	3	Ende Schnellinbetriebnahme End of quick commissioning
P0290	3	Umrichter-Überlastreaktion Inverter overload reaction
P0700	6	Wahl Befehlsquelle selcection of command source
P1000	6	Auswahl Frequenzsollwertquelle selection frequency set point source
P1210	5	Autom. Wiederanwahl automatic reselection
P0927	b::::::::	Eingabesperre lock entry

Duferco Clabecq

Management codes				Document identification				
5.3.0.0	CE	000	DW	QTPC	L04	ROSL	D	0049
System	Phase	Area	Typology	Project	Lot	Company	D/S	Number

Rev.	Date	Description	Prepared	Checked	Approved			
						Date	30.01.2012	
						Dus		

Duferco (SBM 2) Schaltschrank
in place of | Replaced by

RÖSLER finding a better way ...

load circuit
blasting wheel 5

= ES
+ S

01-130070 00

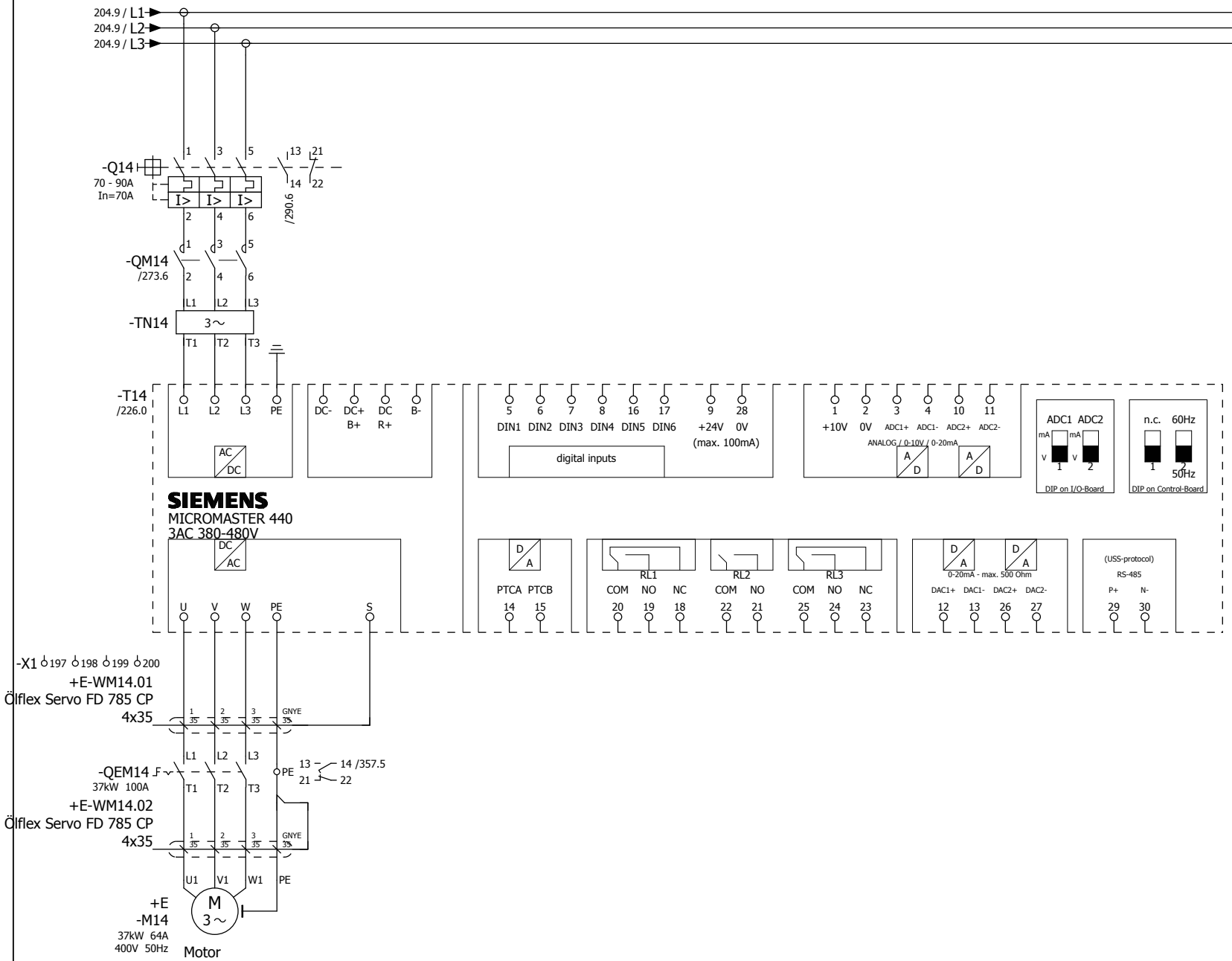

Parametereinstellungen parameter settings		
P0003	3	Zugriffsstufe User access level
P0005	22	Betriebsanzeige Display selection
P0010	1	Schnellinbetriebnahme Commissioning parameter
P0304	400	Motornennspannung Motor voltage rating
P0305	...	Motornennstrom Motor current rating
P0307	...	Motornennleistung Motor power rating
P0310	50	Motornennfrequenz Motor frequency rating
P0311	...	Motornenndrehzahl Motor speed rating
P1080	20	min. Frequenz min. frequency
P1082	50	max. Frequenz max. frequency
P1120	20	Hochlaufzeit run-up time
P1121	50	Bremszeit braking time
P2000	50	Bezugsfrequenz reference frequency
P3900	3	Ende Schnellinbetriebnahme End of quick commissioning
P0290	3	Umrichter-Überlastreaktion Inverter overload reaction
P0700	6	Wahl Befehlsquelle selcection of command source
P1000	6	Auswahl Frequenzsollwertquelle selection frequency set point source
P1210	5	Autom. Wiederanwahl automatic reselection
P0927	b::::::::	Eingabesperre lock entry

Duferco Clabecq

Management codes				Document identification				
5.3.0.0	CE	000	DW	QTPC	L04	ROSL	D	0049
System	Phase	Area	Typology	Project	Lot	Company	D/S	Number

Rev.	Date	Description	Prepared	Checked	Approved	Date 30.01.2012 Dus	Duferco (SBM 2) Schaltschrank	RÖSLER finding a better way ...	load circuit blasting wheel 6	= ES + S	01-130070 00	Page 205 from 565
							in place of	Replaced by				

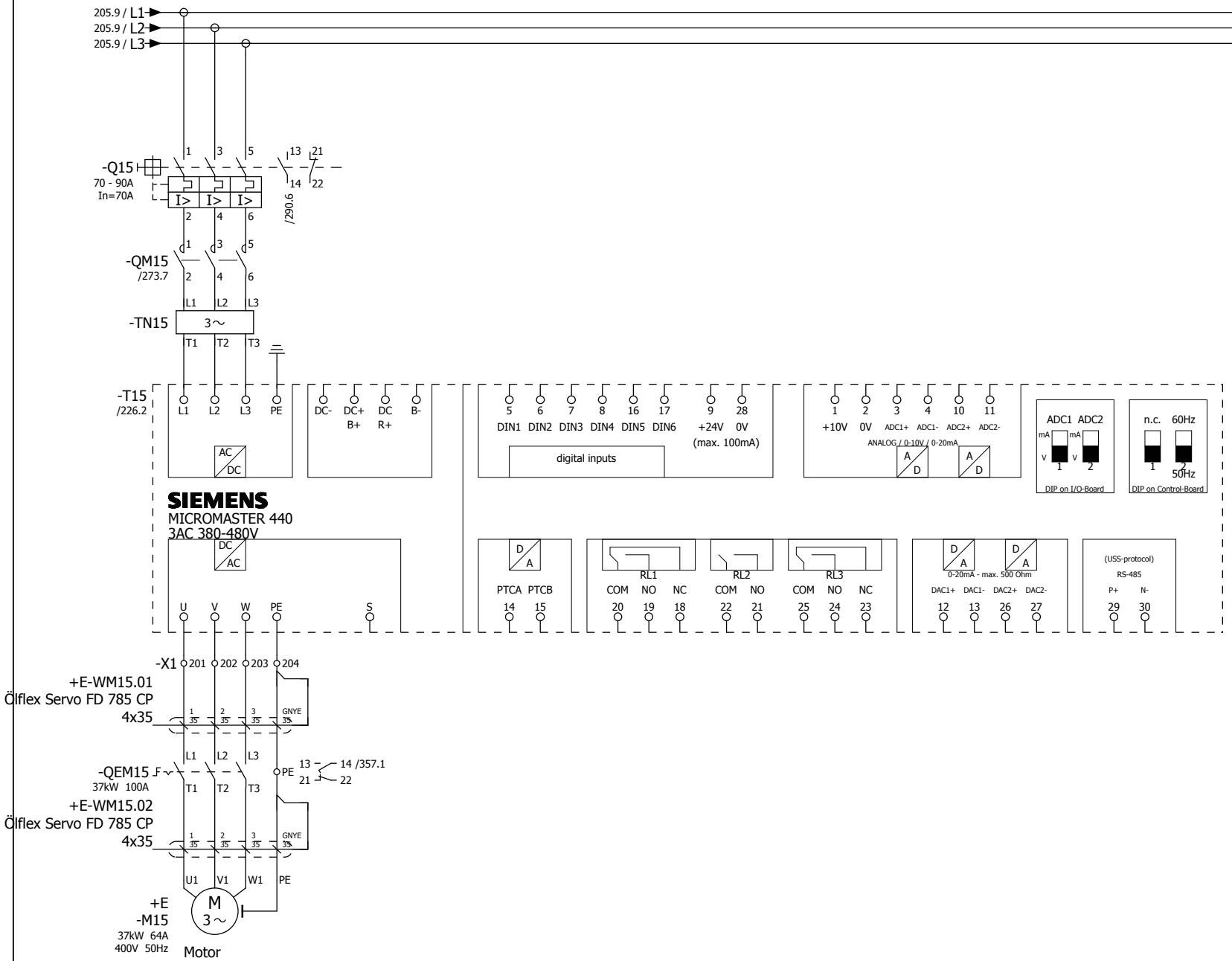

Parametereinstellungen parameter settings		
P0003	3	Zugriffsstufe User access level
P0005	22	Betriebsanzeige Display selection
P0010	1	Schnellinbetriebnahme Commissioning parameter
P0304	400	Motornennspannung Motor voltage rating
P0305	...	Motornennstrom Motor current rating
P0307	...	Motornennleistung Motor power rating
P0310	50	Motornennfrequenz Motor frequency rating
P0311	...	Motornenndrehzahl Motor speed rating
P1080	20	min. Frequenz min. frequency
P1082	50	max. Frequenz max. frequency
P1120	20	Hochlaufzeit run-up time
P1121	50	Bremszeit braking time
P2000	50	Bezugsfrequenz reference frequency
P3900	3	Ende Schnellinbetriebnahme End of quick commissioning
P0290	3	Umrichter-Überlastreaktion Inverter overload reaction
P0700	6	Wahl Befehlsquelle selcection of command source
P1000	6	Auswahl Frequenzsollwertquelle selection frequency set point source
P1210	5	Autom. Wiederanwahl automatic reselection
P0927	b::::::::	Eingabesperre lock entry

Duferco Clabecq

Management codes				Document identification				
5.3.0.0	CE	000	DW	QTPC	L04	ROSL	D	0049
System	Phase	Area	Typology	Project	Lot	Company	D/S	Number

Rev.	Date	Description	Prepared	Checked	Approved			
						Date	30.01.2012	
						Dus		
							Duferco (SBM 2) Schaltschrank	
						in place of		Replaced by

RÖSLER finding a better way ...

load circuit
blasting wheel 7

= ES
+ S

01-130070 00

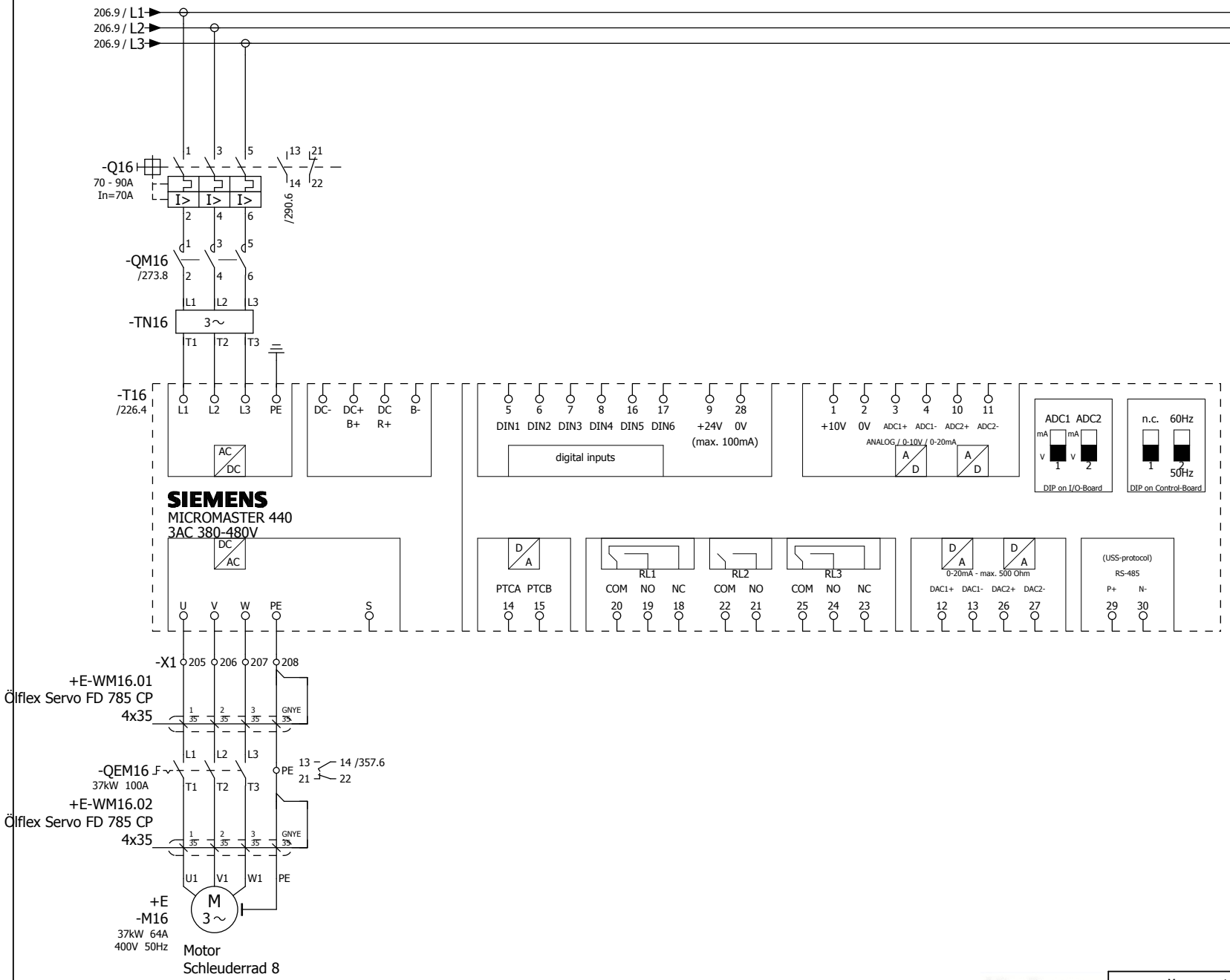

Parametereinstellungen parameter settings		
P0003	3	Zugriffsstufe User access level
P0005	22	Betriebsanzeige Display selection
P0010	1	Schnellinbetriebnahme Commissioning parameter
P0304	400	Motornennspannung Motor voltage rating
P0305	...	Motornennstrom Motor current rating
P0307	...	Motornennleistung Motor power rating
P0310	50	Motornennfrequenz Motor frequency rating
P0311	...	Motornenndrehzahl Motor speed rating
P1080	20	min. Frequenz min. frequency
P1082	50	max. Frequenz max. frequency
P1120	20	Hochlaufzeit run-up time
P1121	50	Bremszeit braking time
P2000	50	Bezugsfrequenz reference frequency
P3900	3	Ende Schnellinbetriebnahme End of quick commissioning
P0290	3	Umrichter-Überlastreaktion Inverter overload reaction
P0700	6	Wahl Befehlsquelle selcection of command source
P1000	6	Auswahl Frequenzsollwertquelle selection frequency set point source
P1210	5	Autom. Wiederanwahl automatic reselection
P0927	b::::::::	Eingabesperre lock entry

Duferco Clabecq

Management codes				Document identification				
5.3.0.0	CE	000	DW	QTPC	L04	ROSL	D	0049
System	Phase	Area	Typology	Project	Lot	Company	D/S	Number

Rev.	Date	Description	Prepared	Checked	Approved	Date 30.01.2012 Dus	Duferco (SBM 2) Schaltschrank	RÖSLER finding a better way ...	load circuit blasting wheel 8	= ES + S	01-130070 00	Page 207 from 565
							in place of	Replaced by				

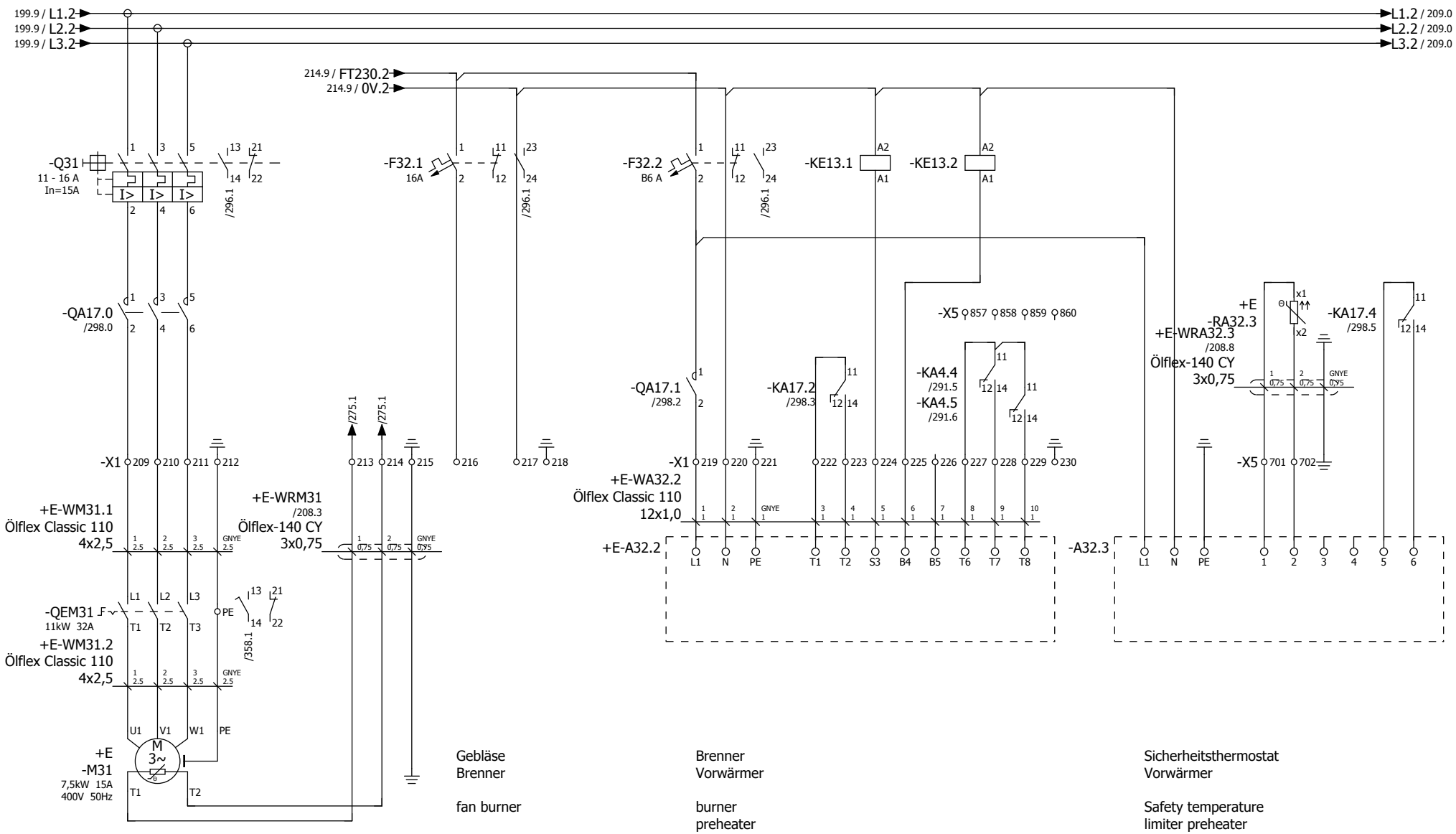

207

209

Duferco Clabecq

Management codes				Document identification				
5.3.0.0	CE	000	DW	QTPC	L04	ROSL	D	0049
System	Phase	Area	Typology	Project	Lot	Company	D/S	Number

						Date	30.01.2012	
						Dus		
Rev.	Date	Description	Prepared	Checked	Approved			

Duferco (SBM 2) Schaltschrank

in place of | Replaced by

RÖSLER finding a better way ...

load circuit preheater

= ES
+ S

01-130070 00

Page 208
from 565

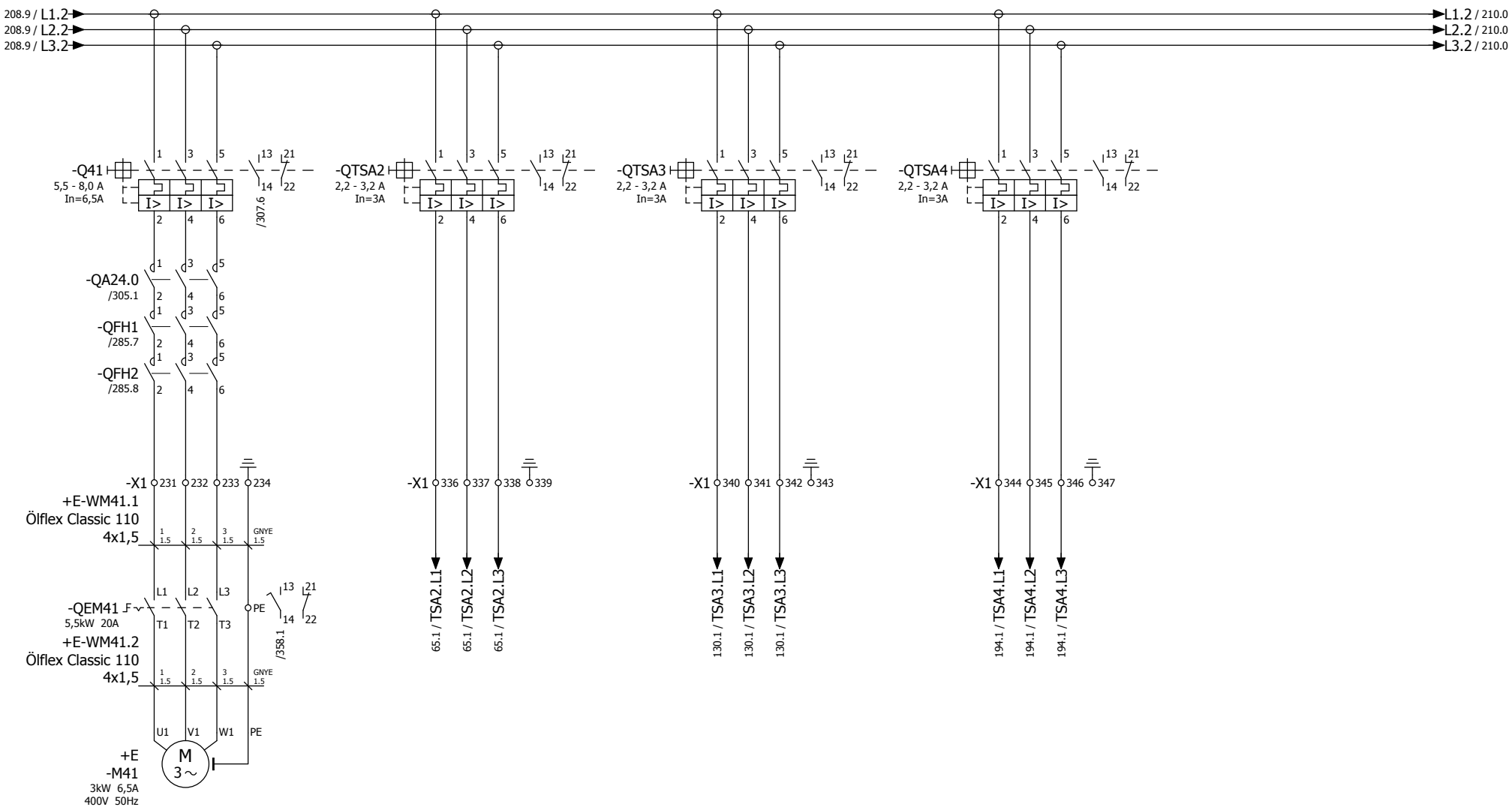

Hydraulikaggregat

hydraulic aggregate

TSA2

TSA3

TSA4

Duferco Clabecq

Management codes				Document identification				
5.3.0.0	CE	000	DW	QTPC	L04	ROSL	D	0049
System	Phase	Area	Typology	Project	Lot	Company	D/S	Number

208 210

						Date	30.01.2012	
						Dus		
Rev.	Date	Description	Prepared	Checked	Approved			

Duferco (SBM 2) Schaltschrank

in place of | Replaced by

RÖSLER finding a better way ...

load circuit
hydraulic aggregate

= ES
+ S

01-130070 00

Page 209
from 565

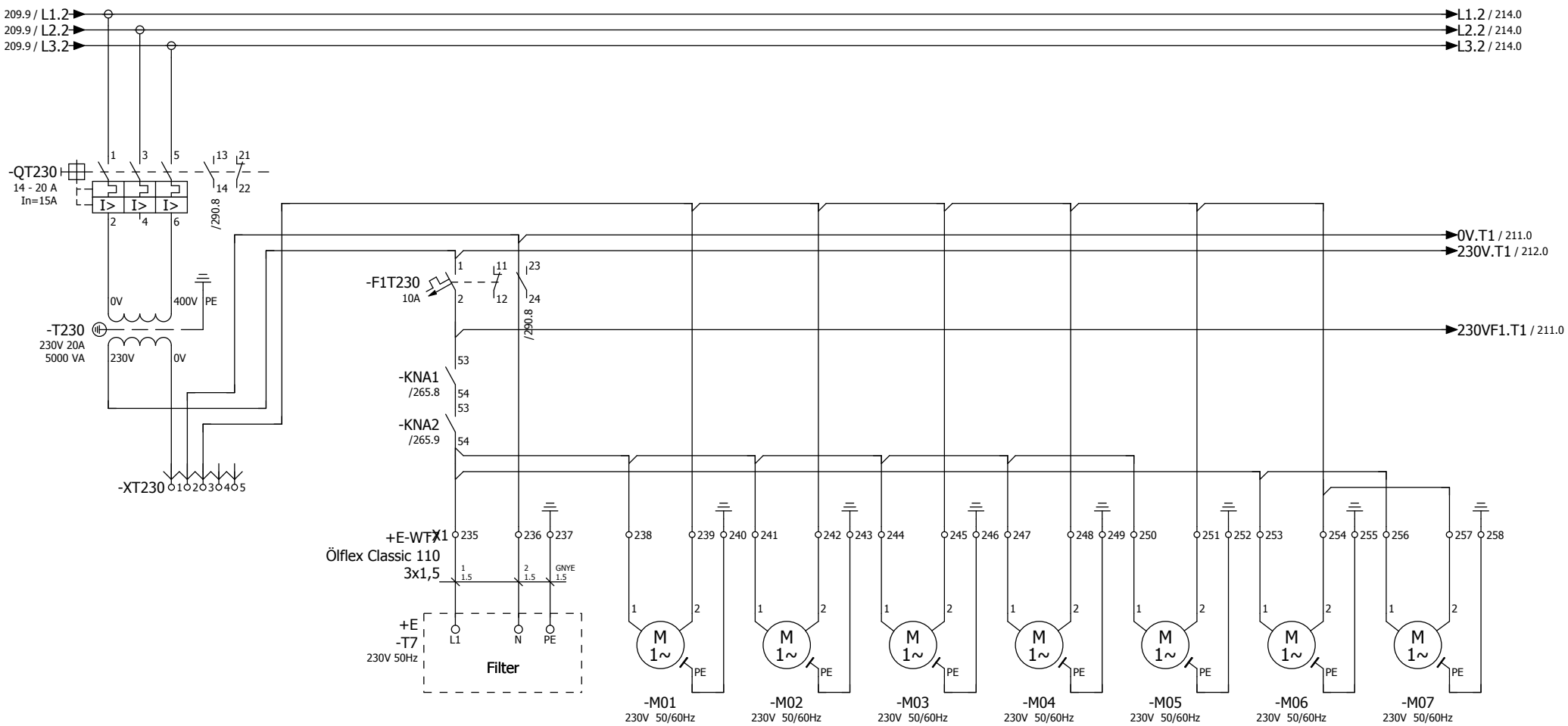

Steuerung Filter	Lüfter 1 Schaltschrank	Lüfter 2 Schaltschrank	Lüfter 3 Schaltschrank	Lüfter 4 Schaltschrank	Lüfter 5 Schaltschrank	Lüfter 6 Schaltschrank	Lüfter 7 Schaltschrank
Control Filter	ventilator 1 Enclosure	ventilator 2 Enclosure	ventilator 3 Enclosure	ventilator 4 Enclosure	ventilator 5 Enclosure	ventilator 6 Enclosure	ventilator 7 Enclosure

Duferco Clabecq

Management codes				Document identification				
5.3.0.0	CE	000	DW	QTPC	L04	ROSL	D	0049
System	Phase	Area	Typology	Project	Lot	Company	D/S	Number

Rev.	Date	Description	Prepared	Checked	Approved	Date 30.01.2012	Duferco (SBM 2) Schaltschrank	RÖSLER finding a better way ...	load circuit 230V transformer 1	= ES	01-130070 00	Page 210
						Dus				+ S		from 565
							in place of	Replaced by				

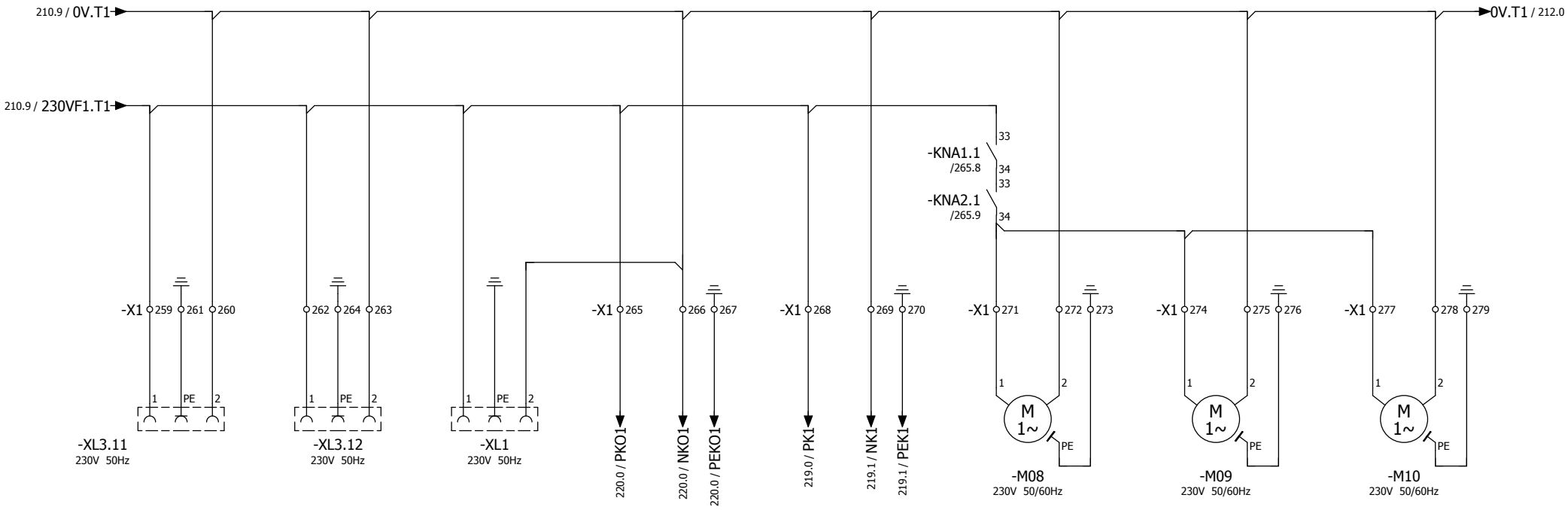

Reserve reserve	Steckdose Schaltschrank socket switch box	Steckdosenleiste Kontrollraum multiple socket control room	Versorgung Kamera 1+2 supply camera 1+2
Lüfter 1 Schaltschrank SA0 ventilator 1 Enclosure SA0	Lüfter 2 Schaltschrank SA0 ventilator 2 Enclosure SA0	Lüfter 3 Schaltschrank SA0 ventilator 3 Enclosure SA0	

Duferco Clabecq

Management codes				Document identification				
5.3.0.0	CE	000	DW	QTPC	L04	ROSL	D	0049
System	Phase	Area	Typology	Project	Lot	Company	D/S	Number

210 212

						Date	30.01.2012	
						Dus		
Rev.	Date	Description	Prepared	Checked	Approved			

Duferco (SBM 2) Schaltschrank

in place of | Replaced by

RÖSLER finding a better way ...

load circuit
230V transformer 1

= ES
+ S

01-130070 00

Page 211
from 565

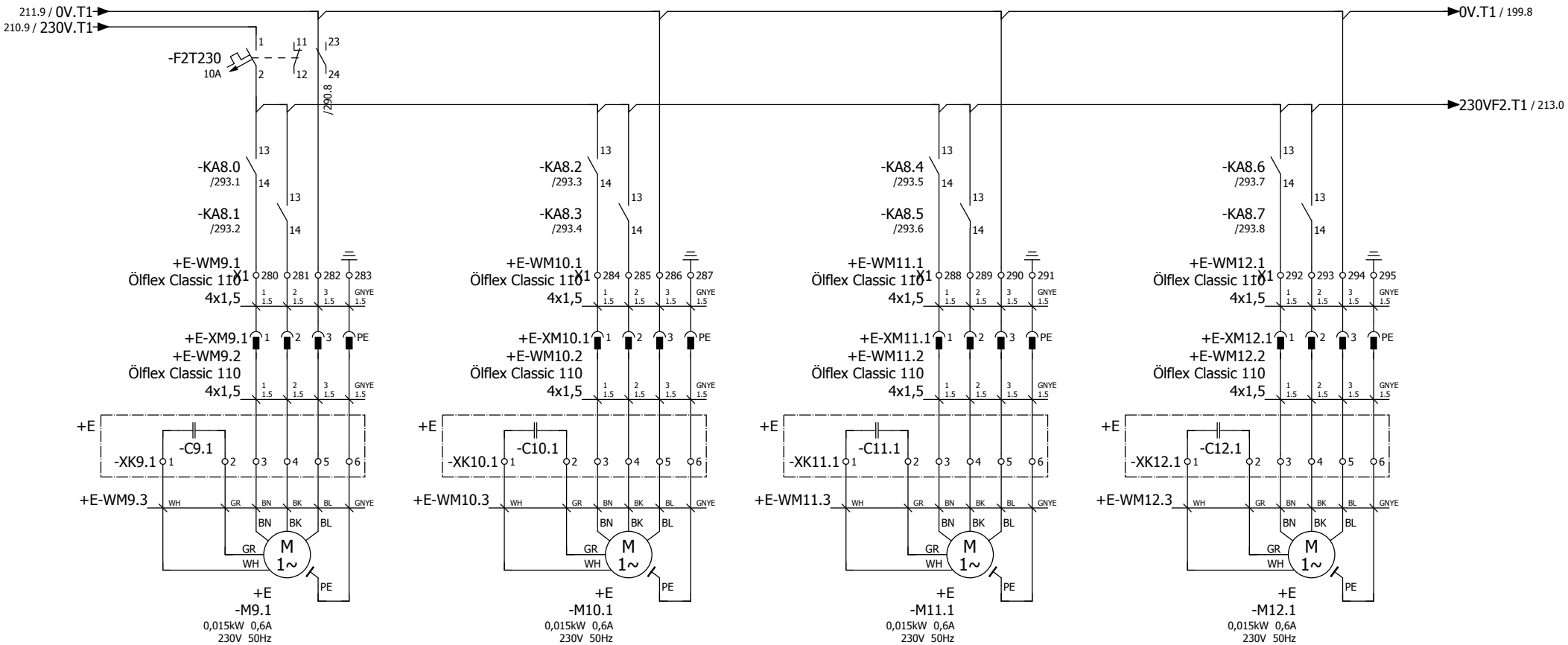

Duferco Clabecq

Management codes				Document identification				
5.3.0.0	CE	000	DW	QTPC	L04	ROSL	D	0049
System	Phase	Area	Typology	Project	Lot	Company	D/S	Number

211 213

Rev.	Date	Description	Prepared	Checked	Approved			
						Date	30.01.2012	
						Dus		

Duferco (SBM 2) Schaltschrank

in place of | Replaced by

RÖSLER finding a better way ...

load circuit
230V transformer 1

= ES
+ S

01-130070 00

Page 212
from 565

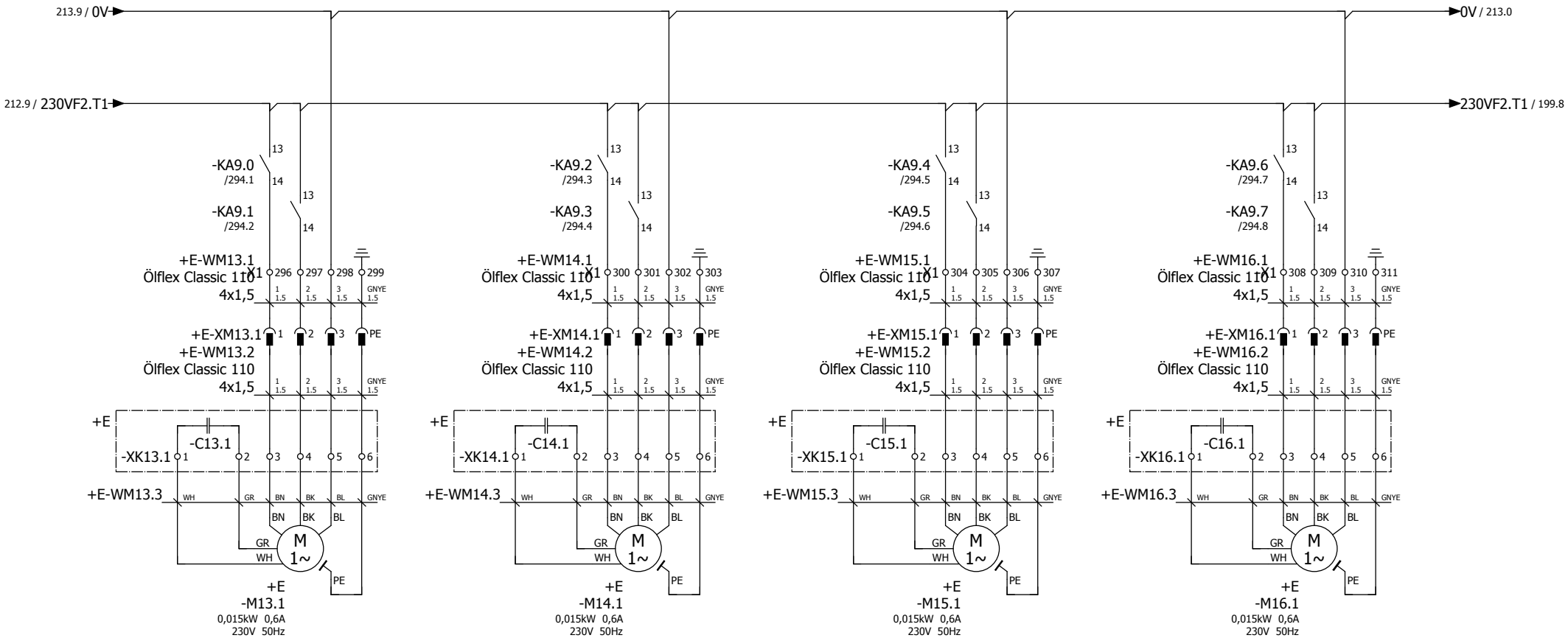

Stellantriebsmotor
Schleuderrad 5

Actuator motor
blasting wheel 5

Stellantriebsmotor
Schleuderrad 6

Actuator motor
blasting wheel 6

Stellantriebsmotor
Schleuderrad 7

Actuator motor
blasting wheel 7

Stellantriebsmotor
Schleuderrad 8

Actuator motor
blasting wheel 8

Duferco Clabecq

Management codes				Document identification				
5.3.0.0	CE	000	DW	QTPC	L04	ROSL	D	0049
System	Phase	Area	Typology	Project	Lot	Company	D/S	Number

212 214

Rev.	Date	Description	Prepared	Checked	Approved			
						Date	30.01.2012	
						Dus		

Duferco (SBM 2) Schaltschrank

in place of | Replaced by

RÖSLER finding a better way ...

load circuit
230V transformer 1

= ES
+ S

01-130070 00

Page 213
from 565

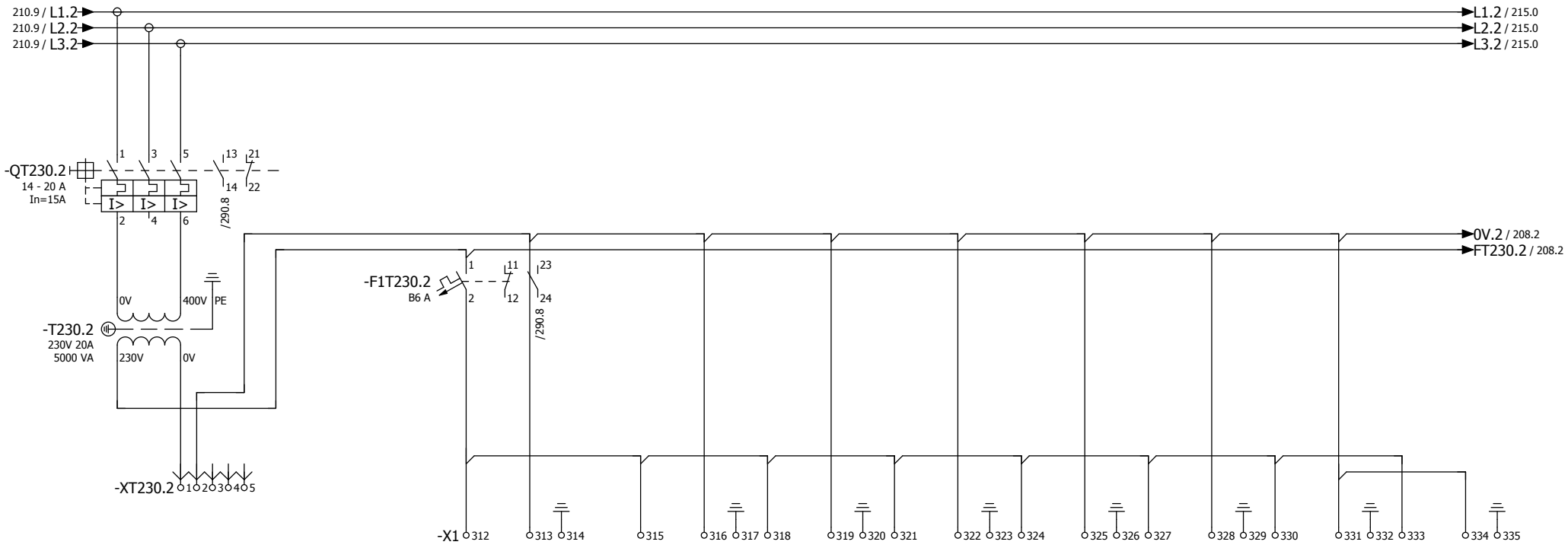

Reserve	Reserve	Reserve	Reserve	Reserve	Reserve	Reserve	Reserve
reserve	reserve	reserve	reserve	reserve	reserve	reserve	reserve

Duferco Clabecq

Management codes				Document identification				
5.3.0.0	CE	000	DW	QTPC	L04	ROSL	D	0049
System	Phase	Area	Typology	Project	Lot	Company	D/S	Number

213 215

Rev.	Date	Description	Prepared	Checked	Approved			
						Date	30.01.2012	
						Dus		

Duferco (SBM 2) Schaltschrank

in place of | Replaced by

RÖSLER finding a better way ...

load circuit
230V transformer 2

= ES
+ S

01-130070 00

Page 214
from 565

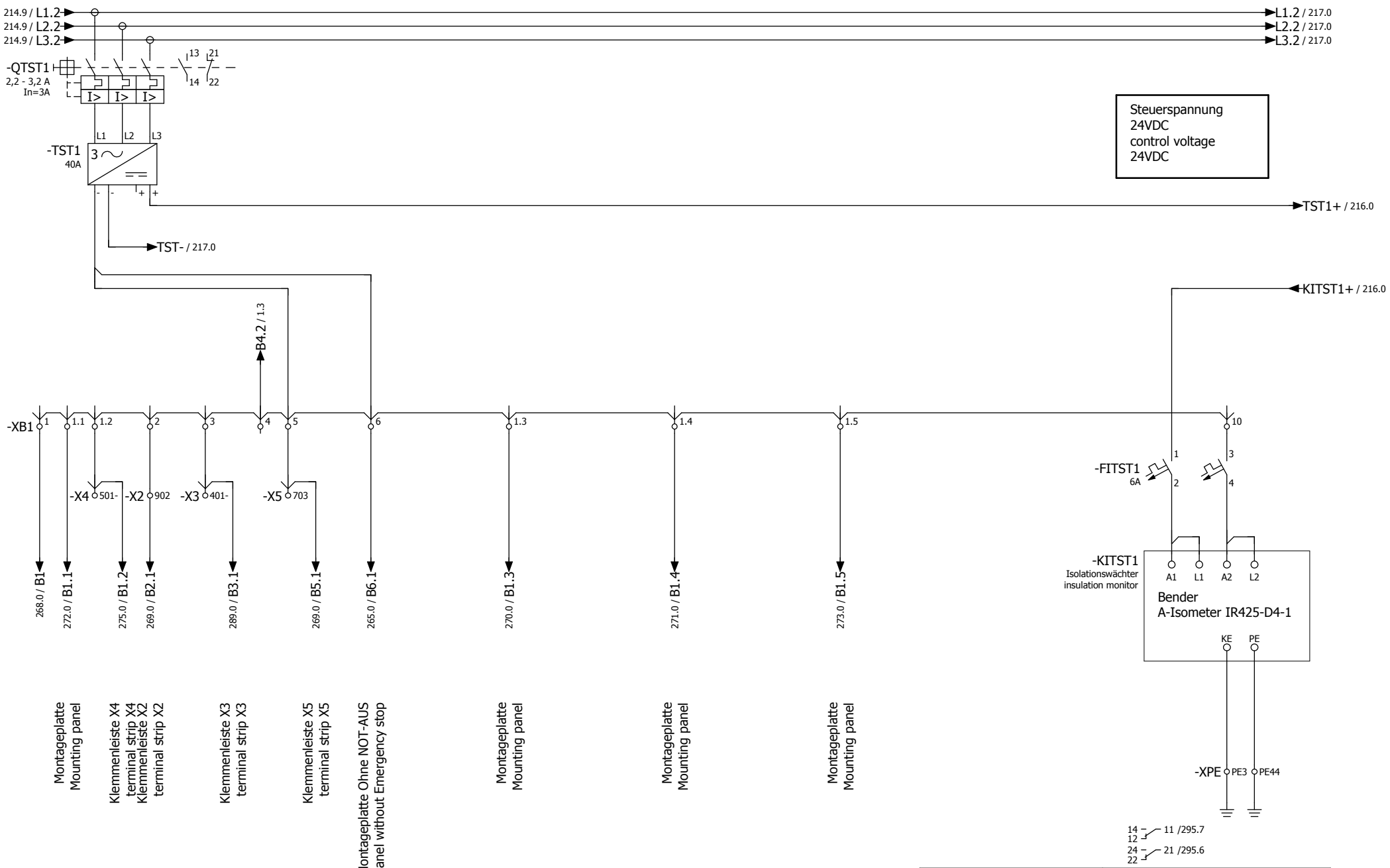

Management codes				Document identification				
5.3.0.0	CE	000	DW	QTPC	L04	ROSL	D	0049
System	Phase	Area	Typology	Project	Lot	Company	D/S	Number

Duferco Clabecq

Rev.	Date	Description	Prepared	Checked	Approved			
						Date	30.01.2012	
						Dus		

Duferco (SBM 2) Schaltschrank

in place of | Replaced by

RÖSLER finding a better way ...

Control
Power supply unit 1

= ES
+ S

01-130070 00

Page 215
from 565

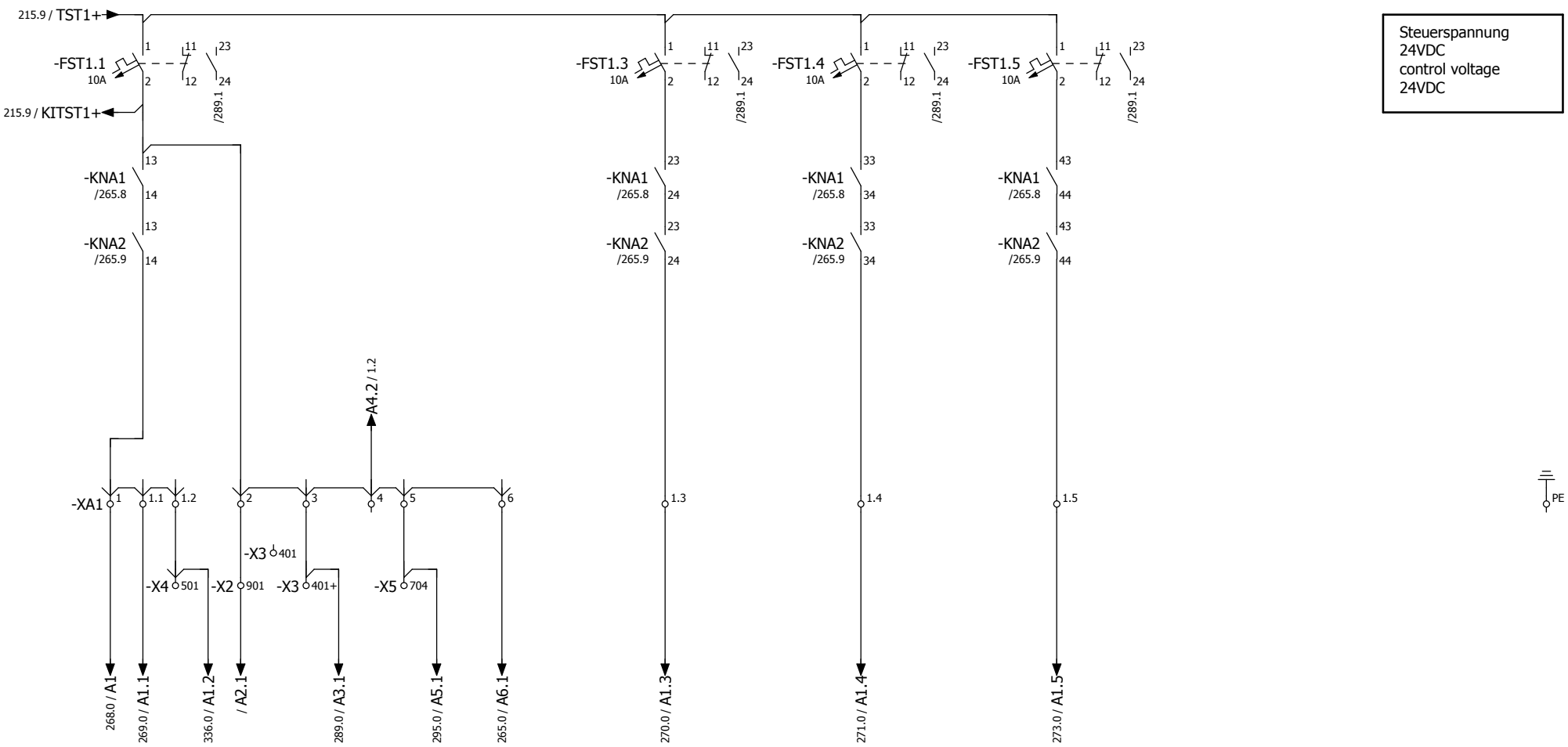

Montageplatte
Mounting panel

Klemmenleiste X4
terminal strip X4
Klemmenleiste X2
terminal strip X2

Klemmenleiste X3
terminal strip X3

Klemmenleiste X5
terminal strip X5

Montageplatte Ohne NOT-AUS
Mounting panel without Emergency stop

Montageplatte
Mounting panel

Montageplatte
Mounting panel

Montageplatte
Mounting panel

Duferco Clabecq

Management codes				Document identification				
5.3.0.0	CE	000	DW	QTPC	L04	ROSL	D	0049
System	Phase	Area	Typology	Project	Lot	Company	D/S	Number

215 217

Rev.	Date	Description	Prepared	Checked	Approved	Date 30.01.2012	Dus	Duferco (SBM 2) Schaltschrank	RÖSLER finding a better way ...	Control Power supply unit 1	= ES	+ S	01-130070 00	Page 216 from 565
								in place of	Replaced by					

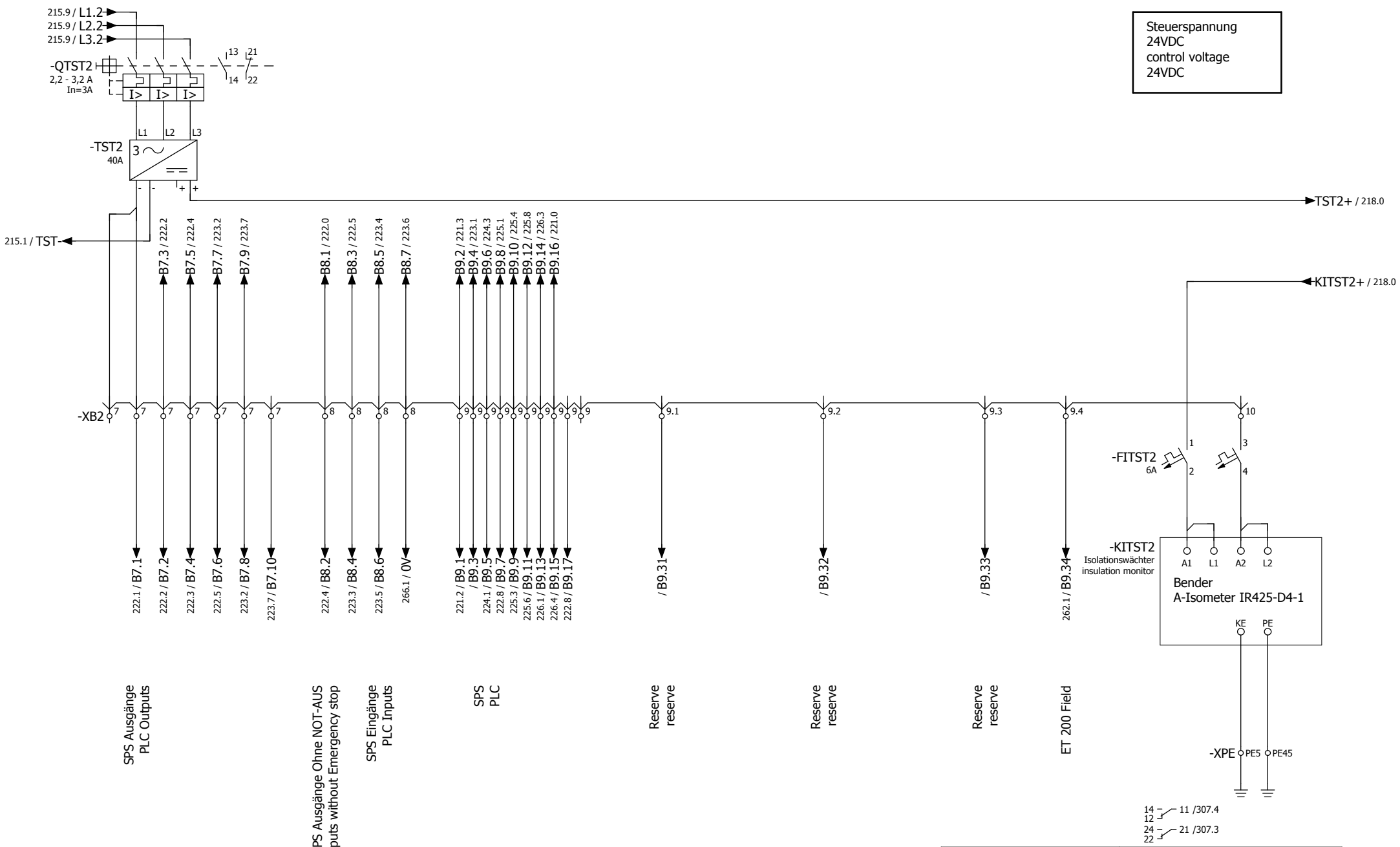

Steuerspannung
24VDC
control voltage
24VDC

216

218

Duferco Clabecq

Management codes				Document identification				
5.3.0.0	CE	000	DW	QTPC	L04	ROSL	D	0049
System	Phase	Area	Typology	Project	Lot	Company	D/S	Number

Rev.	Date	Description	Prepared	Checked	Approved			
						Date	30.01.2012	
						Dus		

Duferco (SBM 2) Schaltschrank

in place of | Replaced by

RÖSLER finding a better way ...

Control
Power supply unit 2

= ES
+ S

01-130070 00

Page 217
from 565

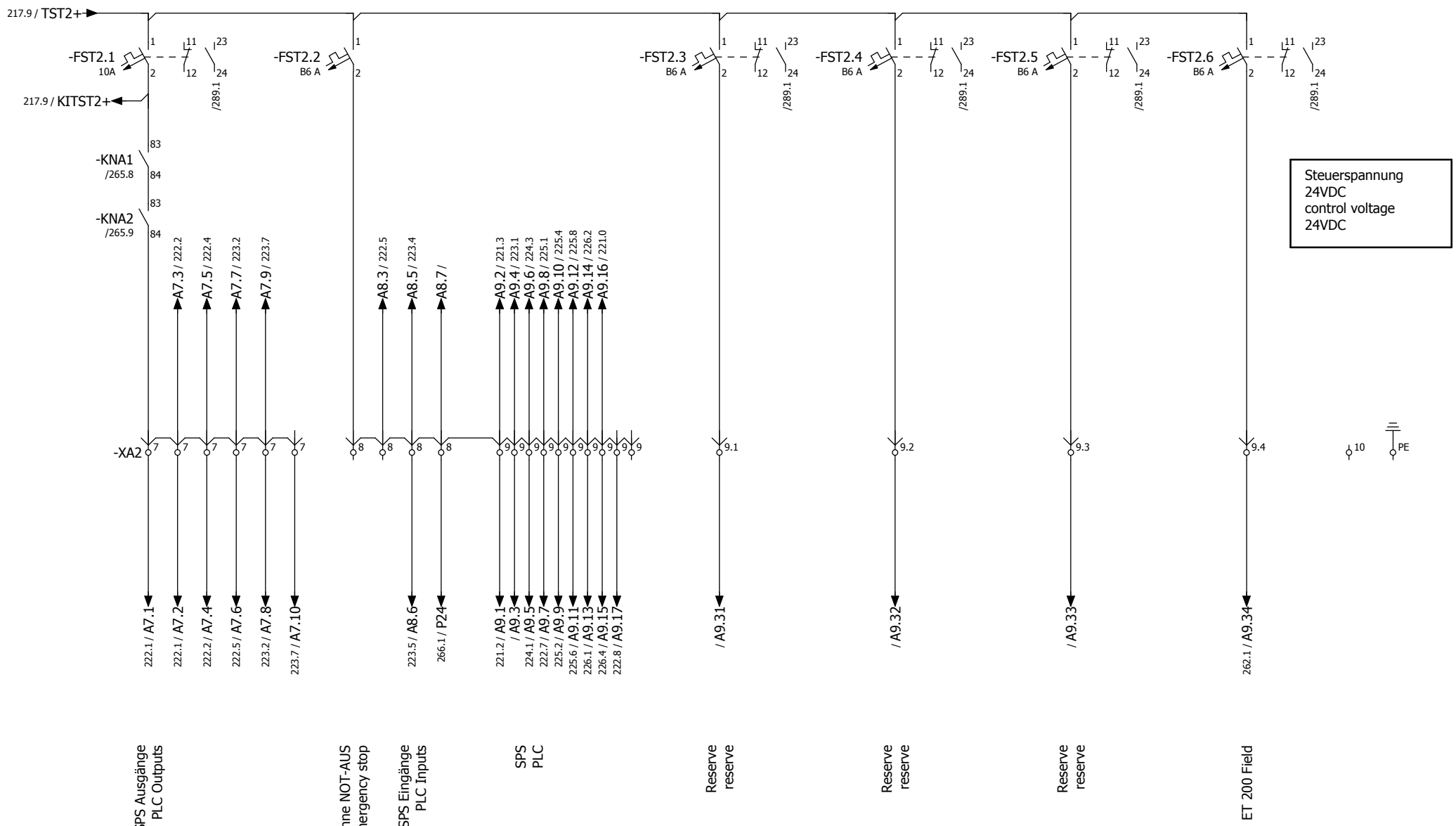

Steuerspannung
24VDC
control voltage
24VDC

217

219

Duferco Clabecq

Management codes				Document identification				
5.3.0.0	CE	000	DW	QTPC	L04	ROSL	D	0049
System	Phase	Area	Typology	Project	Lot	Company	D/S	Number

Rev.	Date	Description	Prepared	Checked	Approved			
						Date	30.01.2012	
						Dus		

Duferco (SBM 2) Schaltschrank

in place of | Replaced by

RÖSLER finding a better way ...

Control
Power supply unit 2

= ES
+ S

01-130070 00

Page 218
from 565

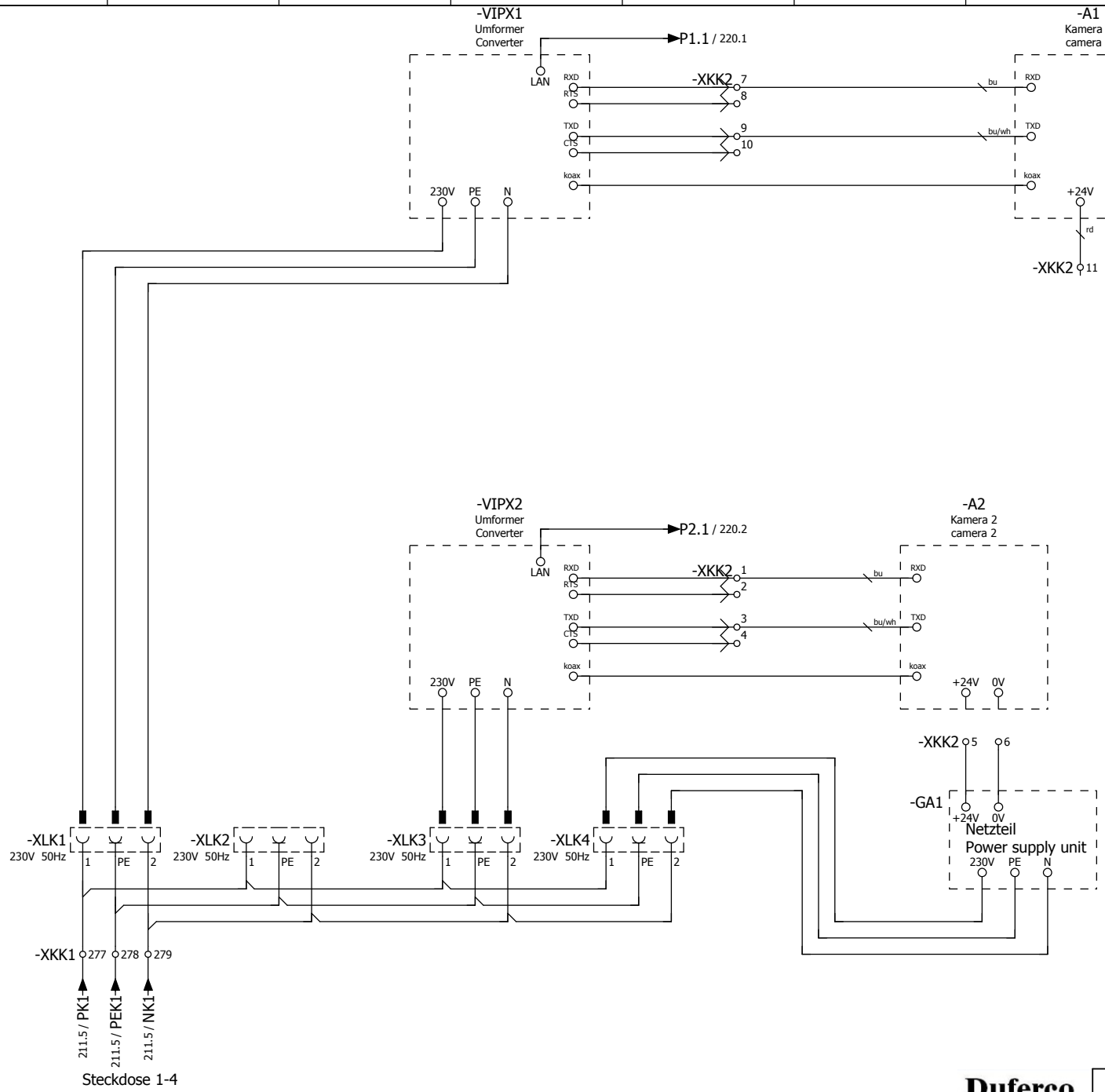

Duferco Clabecq

Management codes				Document identification				
5.3.0.0	CE	000	DW	QTPC	L04	ROSL	D	0049
System	Phase	Area	Typology	Project	Lot	Company	D/S	Number

Rev.	Date	Description	Prepared	Checked	Approved			
						Date	30.01.2012	
						Dus		
							Duferco (SBM 2) Schaltschrank	
						in place of		Replaced by

RÖSLER finding a better way ...

Control camera 1+2

= ES
+ S

01-130070 00

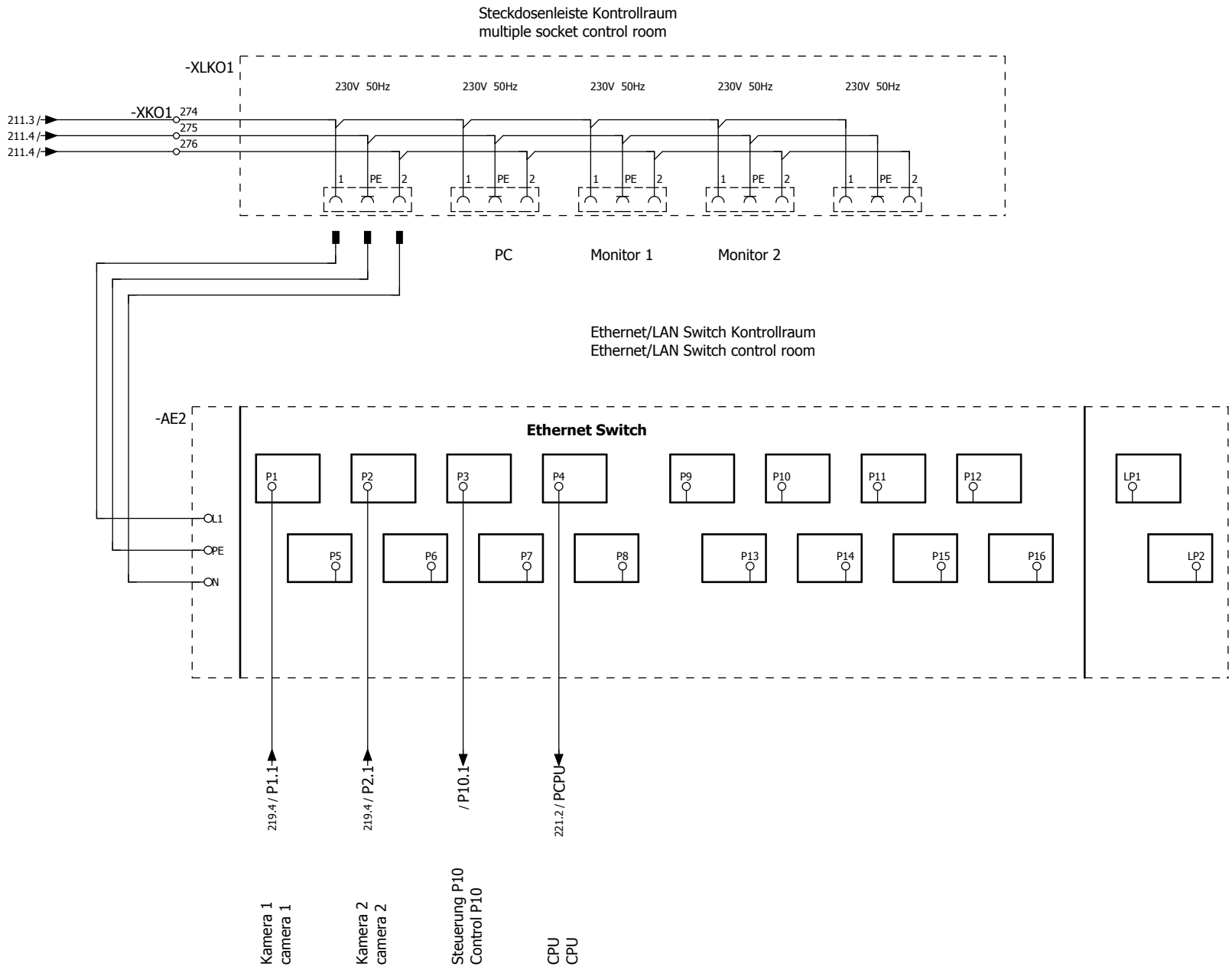

Duferco Clabecq

Management codes				Document identification				
5.3.0.0	CE	000	DW	QTPC	L04	ROSL	D	0049
System	Phase	Area	Typology	Project	Lot	Company	D/S	Number

219 221

						Date	30.01.2012	Duferco (SBM 2) Schaltschrank	
						Dus			
Rev.	Date	Description	Prepared	Checked	Approved			in place of	Replaced by

RÖSLER finding a better way ...

Control
Ethernet/LAN control room

= ES
+ S

01-130070 00

Page 220
from 565

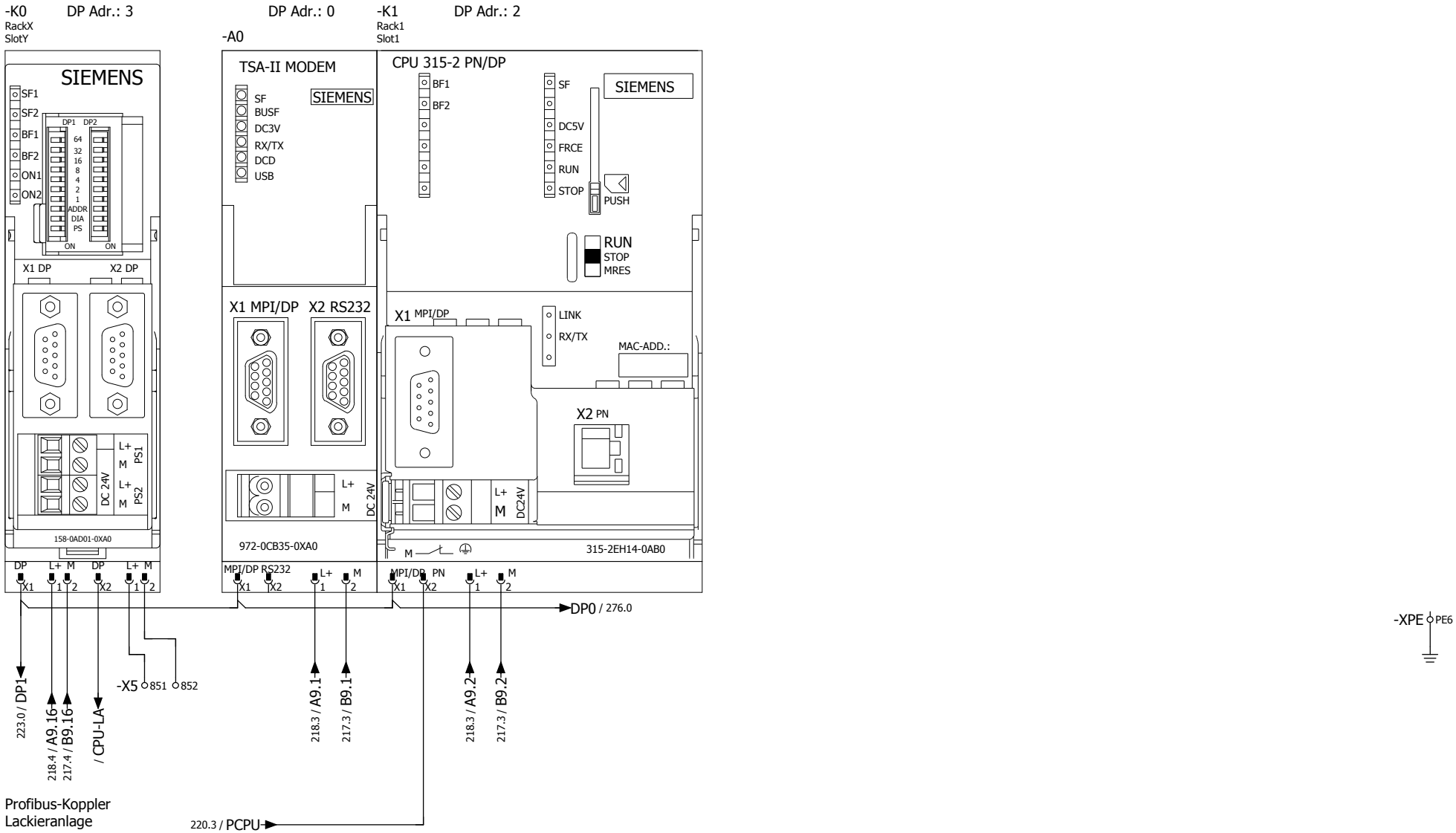

Profibus-Koppler
Lackieranlage

Profibus coupler
painting installation

Duferco Clabecq

Management codes				Document identification				
5.3.0.0	CE	000	DW	QTPC	L04	ROSL	D	0049
System	Phase	Area	Typology	Project	Lot	Company	D/S	Number

220 222

						Date	30.01.2012	
						Dus		
Rev.	Date	Description	Prepared	Checked	Approved			

Duferco (SBM 2) Schaltschrank
in place of | Replaced by

RÖSLER finding a better way ...

Control
erection PLC
CPU + OP

= ES
+ S

01-130070 00

Page 221
from 565

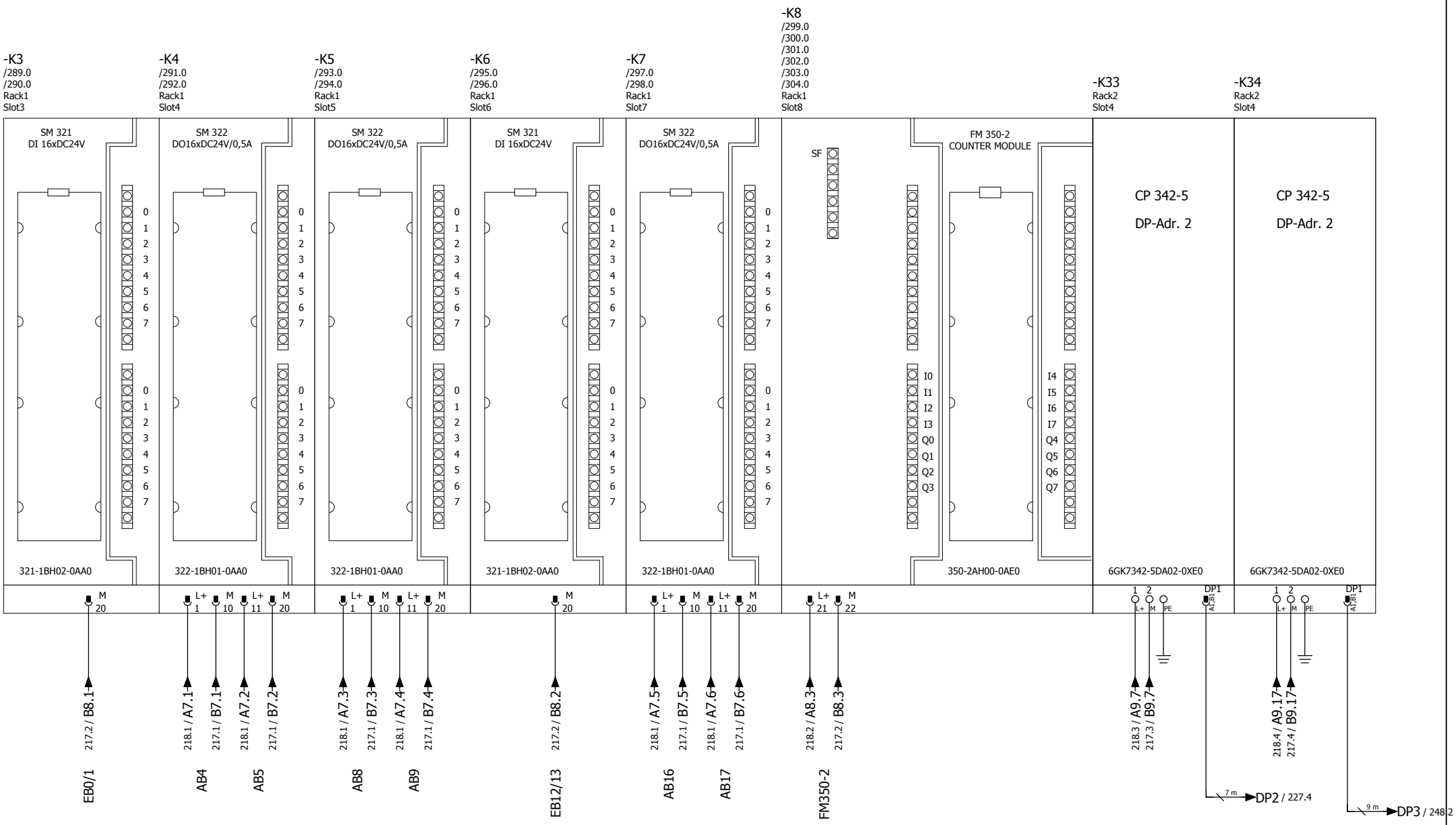

Duferco Clabecq

Management codes				Document identification				
5.3.0.0	CE	000	DW	QTPC	L04	ROSL	D	0049
System	Phase	Area	Typology	Project	Lot	Company	D/S	Number

221 223

						Date	30.01.2012	
						Dus		
Rev.	Date	Description	Prepared	Checked	Approved			

Duferco (SBM 2) Schaltschrank

in place of | Replaced by

RÖSLER finding a better way ...

Control
erection PLC
Rack 1

= ES
+ S

01-130070 00

Page 222
from 565

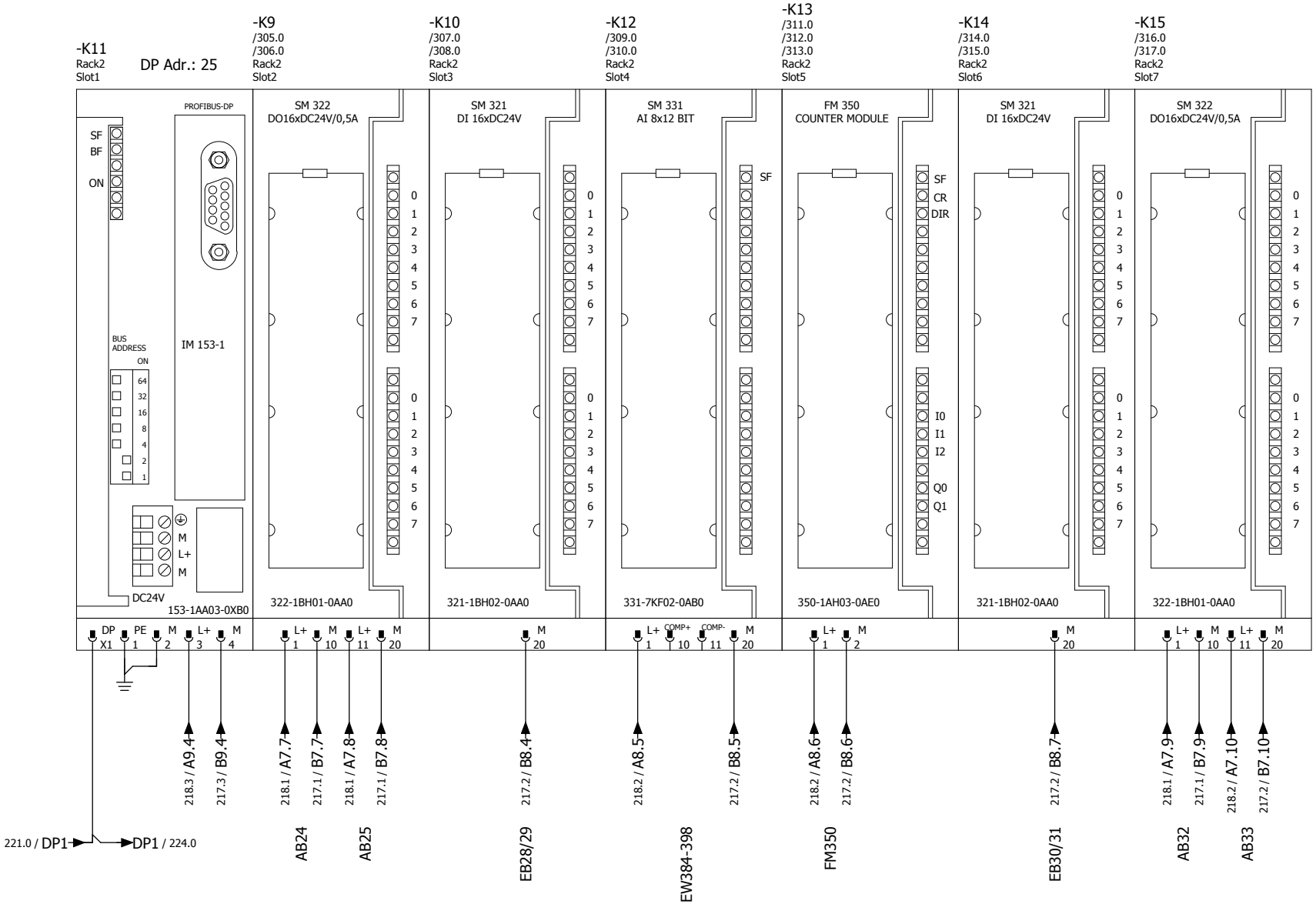

Duferco Clabecq

Management codes				Document identification				
5.3.0.0	CE	000	DW	QTPC	L04	ROSL	D	0049
System	Phase	Area	Typology	Project	Lot	Company	D/S	Number

222 224

Rev.	Date	Description	Prepared	Checked	Approved	Date 30.01.2012	Dus	Duferco (SBM 2) Schaltschrank	in place of	Replaced by

RÖSLER finding a better way ...

Control erection PLC Rack 2

= ES
+ S

01-130070 00

Page 223 from 565

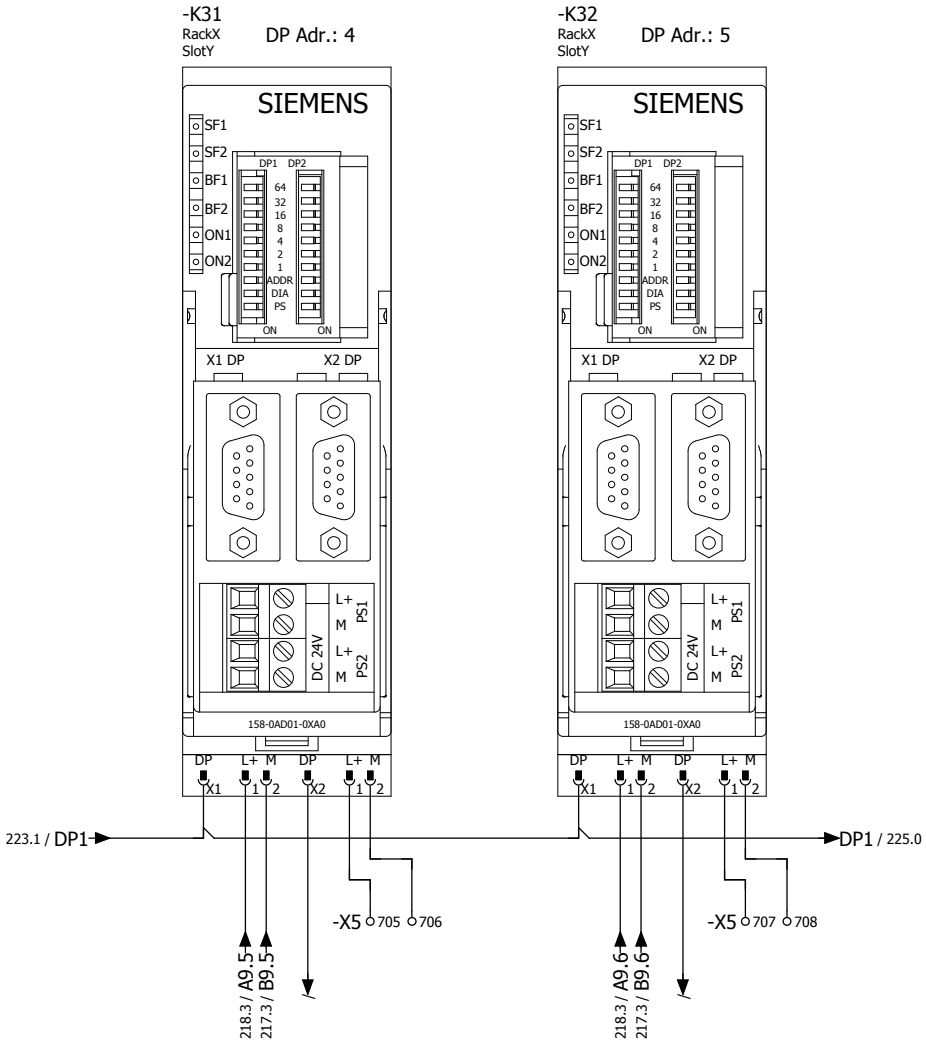

Profibus-Koppler 1
Zuführung

Profibus coupler 1
feeding

Profibus-Koppler 2
Abgabeseite

Profibus coupler 2
discharge side

Duferco Clabecq

Management codes				Document identification				
5.3.0.0	CE	000	DW	QTPC	L04	ROSL	D	0049
System	Phase	Area	Typology	Project	Lot	Company	D/S	Number

223 225

						Date	30.01.2012	Duferco (SBM 2) Schaltschrank	
						Dus			
Rev.	Date	Description	Prepared	Checked	Approved			in place of	Replaced by

RÖSLER finding a better way ...

Control DP

= ES
+ S

01-130070 00

Page 224
from 565

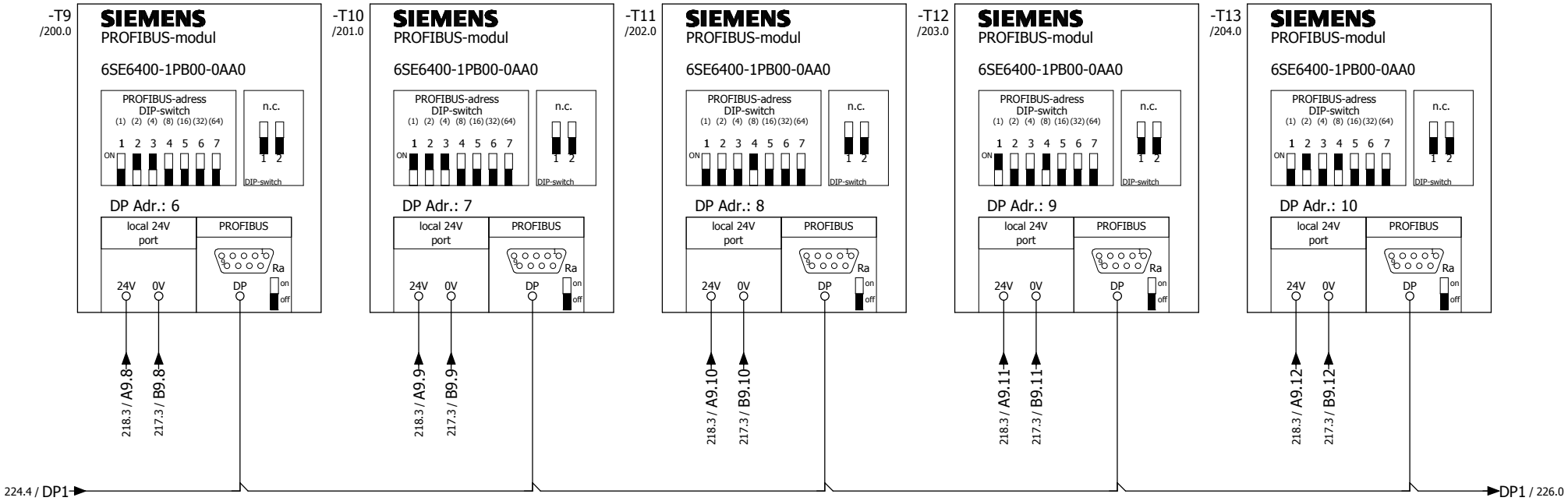

Frequenzwandler
Schleuderrad 1

frequency converter
blasting wheel 1

Frequenzwandler
Schleuderrad 2

frequency converter
blasting wheel 2

Frequenzwandler
Schleuderrad 3

frequency converter
blasting wheel 3

Frequenzwandler
Schleuderrad 4

frequency converter
blasting wheel 4

Frequenzwandler
Schleuderrad 5

frequency converter
blasting wheel 5

Duferco Clabecq

Management codes				Document identification				
5.3.0.0	CE	000	DW	QTPC	L04	ROSL	D	0049
System	Phase	Area	Typology	Project	Lot	Company	D/S	Number

Rev.	Date	Description	Prepared	Checked	Approved	Date 30.01.2012	Duferco (SBM 2) Schaltschrank	RÖSLER finding a better way ...	Control DP blasting wheel	= ES	Page 225
						Dus				+ S	
							in place of	Replaced by		01-130070 00	from 565

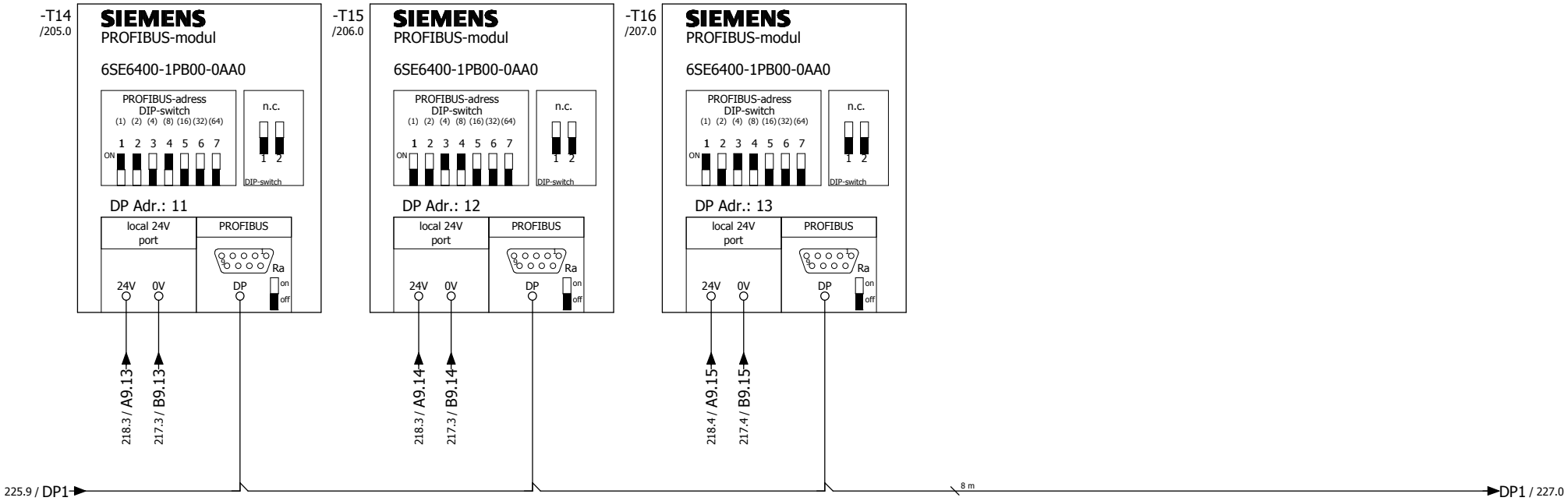

Frequenzwandler
Schleuderrad 6

frequency converter
blasting wheel 6

Frequenzwandler
Schleuderrad 7

frequency converter
blasting wheel 7

Frequenzwandler
Schleuderrad 8

frequency converter
blasting wheel 8

Duferco Clabecq

Management codes				Document identification				
5.3.0.0	CE	000	DW	QTPC	L04	ROSL	D	0049
System	Phase	Area	Typology	Project	Lot	Company	D/S	Number

Rev.	Date	Description	Prepared	Checked	Approved			
						Date	30.01.2012	
						Dus		

Duferco (SBM 2) Schaltschrank

in place of | Replaced by

RÖSLER finding a better way ...

Control DP blasting wheel

= ES
+ S

01-130070 00

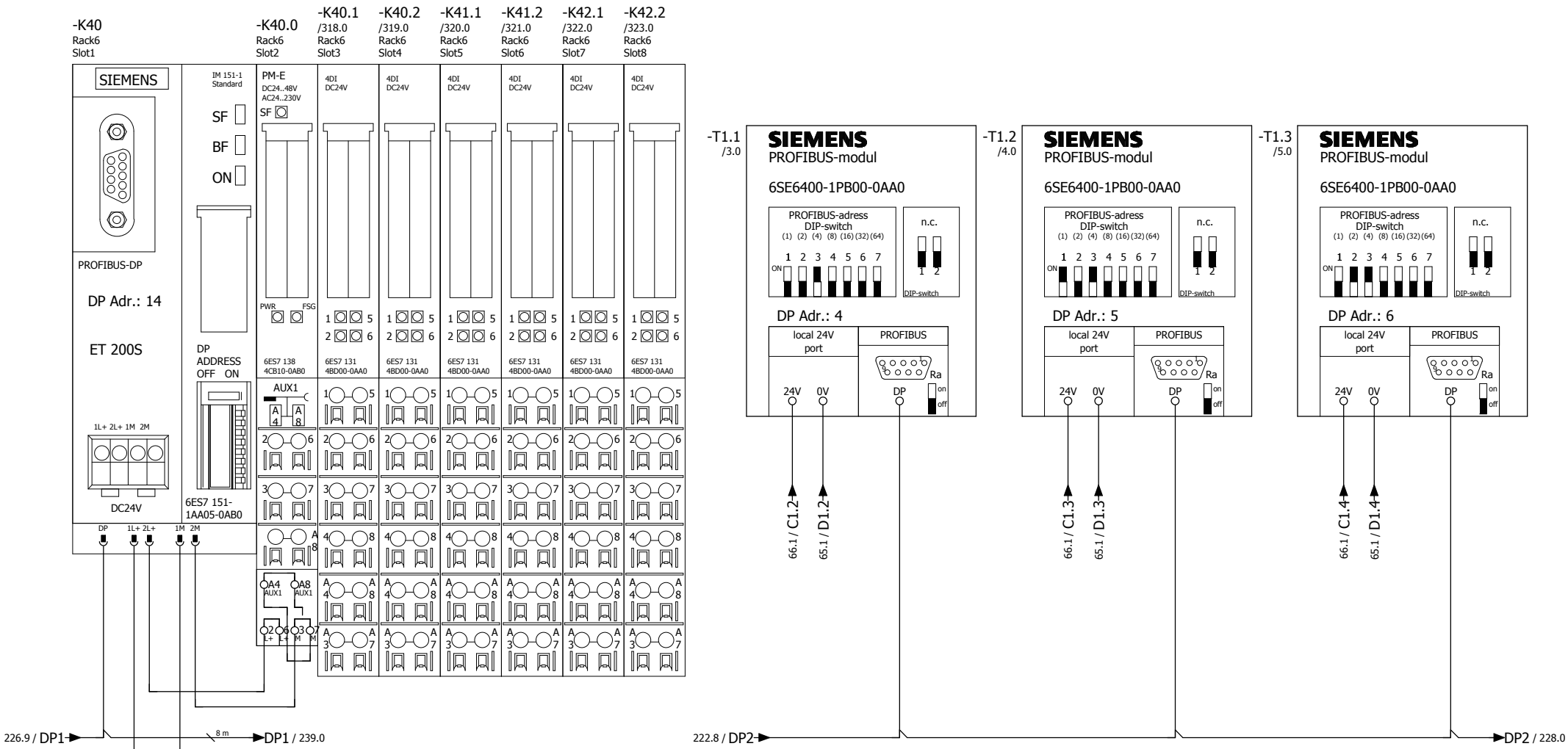

226

228

Duferco Clabecq

Management codes				Document identification				
5.3.0.0	CE	000	DW	QTPC	L04	ROSL	D	0049
System	Phase	Area	Typology	Project	Lot	Company	D/S	Number

						Date	30.01.2012	
						Dus		
Rev.	Date	Description	Prepared	Checked	Approved			

Duferco (SBM 2) Schaltschrank

in place of | Replaced by

RÖSLER finding a better way ...

Control DP ET 200S + FU SA2

= ES
+ S

01-130070 00

Page 227
from 565

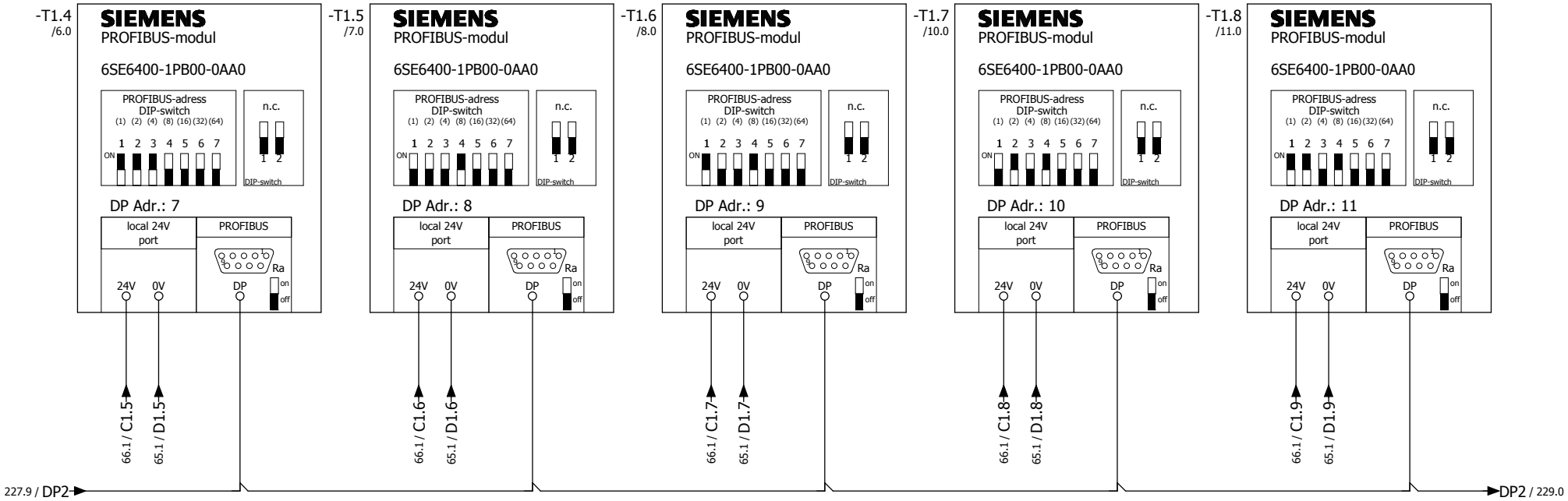

Frequenzwandler Rollenbahn Einlauf M4	Frequenzwandler Rollenbahn Einlauf M5	Frequenzwandler Rollenbahn Einlauf M6	Frequenzwandler Rollenbahn Einlauf M7	Frequenzwandler Rollenbahn Einlauf M8
frequency converter roll conveyor inlet M4	frequency converter roll conveyor inlet M5	frequency converter roll conveyor inlet M6	frequency converter roll conveyor inlet M7	frequency converter roll conveyor inlet M8

Duferco Clabecq

Management codes				Document identification				
5.3.0.0	CE	000	DW	QTPC	L04	ROSL	D	0049
System	Phase	Area	Typology	Project	Lot	Company	D/S	Number

Rev.	Date	Description	Prepared	Checked	Approved			
						Date	30.01.2012	
						Dus		

Duferco (SBM 2) Schaltschrank

in place of | Replaced by

RÖSLER finding a better way ...

Control DP SA2

= ES
+ S

01-130070 00

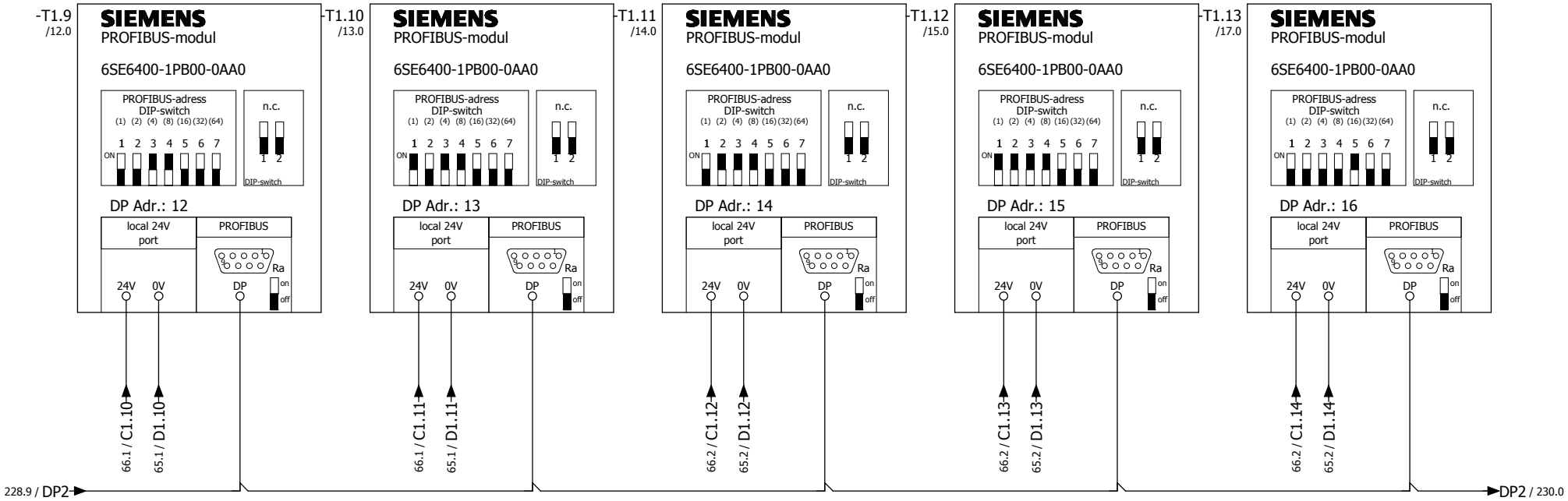

Frequenzwandler Rollenbahn Einlauf M9	Frequenzwandler Rollenbahn Einlauf M10	Frequenzwandler Rollenbahn Einlauf M11	Frequenzwandler Rollenbahn Einlauf M12	Frequenzwandler Rollenbahn Einlauf M13
frequency converter roll conveyor inlet M9	frequency converter roll conveyor inlet M10	frequency converter roll conveyor inlet M11	frequency converter roll conveyor inlet M12	frequency converter roll conveyor inlet M13

Duferco Clabecq

Management codes				Document identification				
5.3.0.0	CE	000	DW	QTPC	L04	ROSL	D	0049
System	Phase	Area	Typology	Project	Lot	Company	D/S	Number

Rev.	Date	Description	Prepared	Checked	Approved			
						Date	30.01.2012	
						Dus		
							Duferco (SBM 2) Schaltschrank	
							in place of	Replaced by

RÖSLER finding a better way ...

Control DP SA2

= ES
+ S

01-130070 00

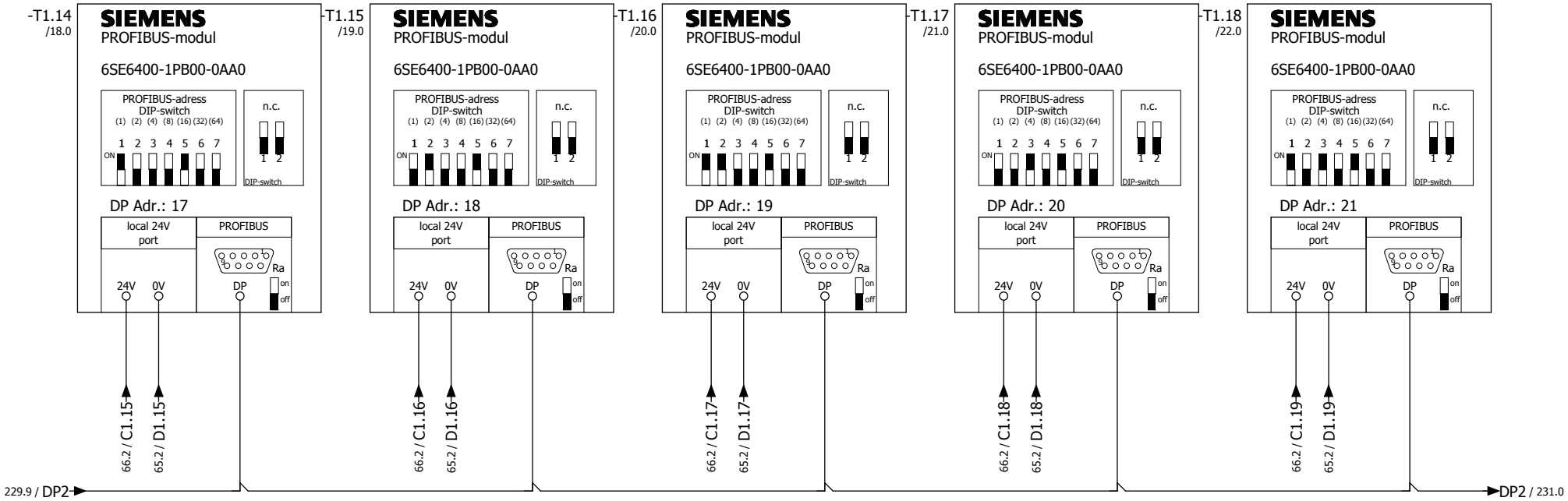

Frequenzwandler Rollenbahn Einlauf M14	Frequenzwandler Rollenbahn Einlauf M15	Frequenzwandler Rollenbahn Einlauf M16	Frequenzwandler Rollenbahn Einlauf M17	Frequenzwandler Rollenbahn Einlauf M18
frequency converter roll conveyor inlet M14	frequency converter roll conveyor inlet M15	frequency converter roll conveyor inlet M16	frequency converter roll conveyor inlet M17	frequency converter roll conveyor inlet M18

Duferco Clabecq

Management codes				Document identification				
5.3.0.0	CE	000	DW	QTPC	L04	ROSL	D	0049
System	Phase	Area	Typology	Project	Lot	Company	D/S	Number

Rev.	Date	Description	Prepared	Checked	Approved			
						Date	30.01.2012	
						Dus		

Duferco (SBM 2) Schaltschrank

in place of | Replaced by

RÖSLER finding a better way ...

Control DP SA2

= ES
+ S

01-130070 00

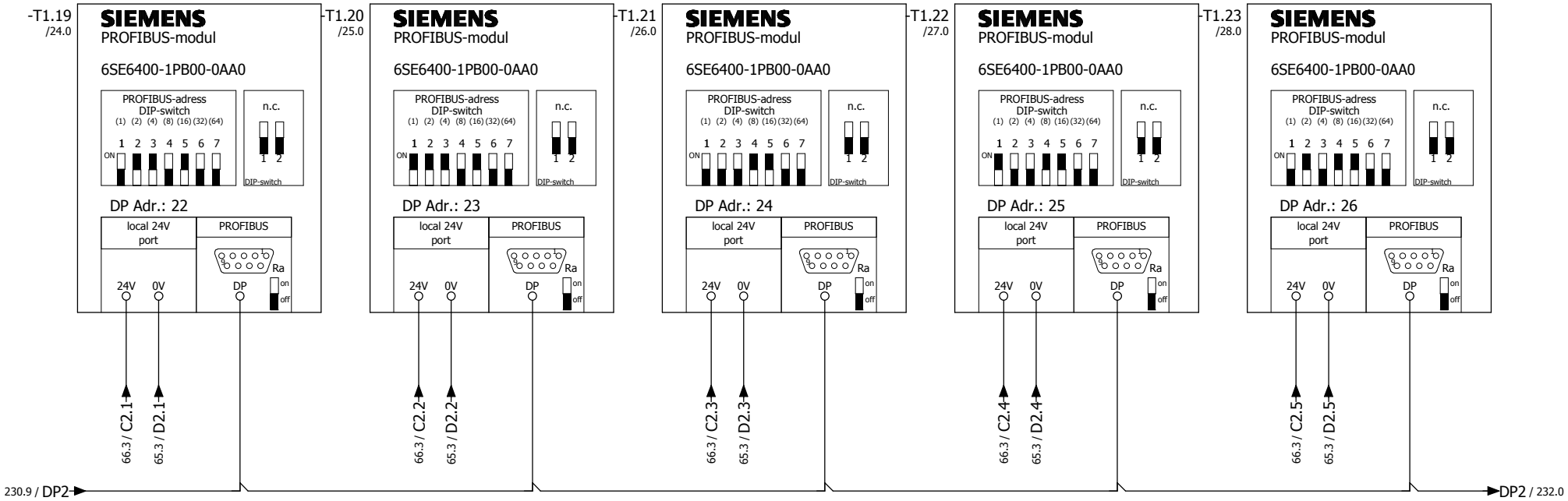

Frequenzwandler Rollenbahn Einlauf M19	Frequenzwandler Rollenbahn Einlauf M20	Frequenzwandler Rollenbahn Einlauf M21	Frequenzwandler Rollenbahn Einlauf M22	Frequenzwandler Rollenbahn Einlauf M23
frequency converter roll conveyor inlet M19	frequency converter roll conveyor inlet M20	frequency converter roll conveyor inlet M21	frequency converter roll conveyor inlet M22	frequency converter roll conveyor inlet M23

Duferco Clabecq

Management codes				Document identification				
5.3.0.0	CE	000	DW	QTPC	L04	ROSL	D	0049
System	Phase	Area	Typology	Project	Lot	Company	D/S	Number

Rev.	Date	Description	Prepared	Checked	Approved			
						Date	30.01.2012	
						Dus		
							Duferco (SBM 2) Schaltschrank	
							in place of	Replaced by

RÖSLER finding a better way ...

Control DP SA2

= ES
+ S

01-130070 00

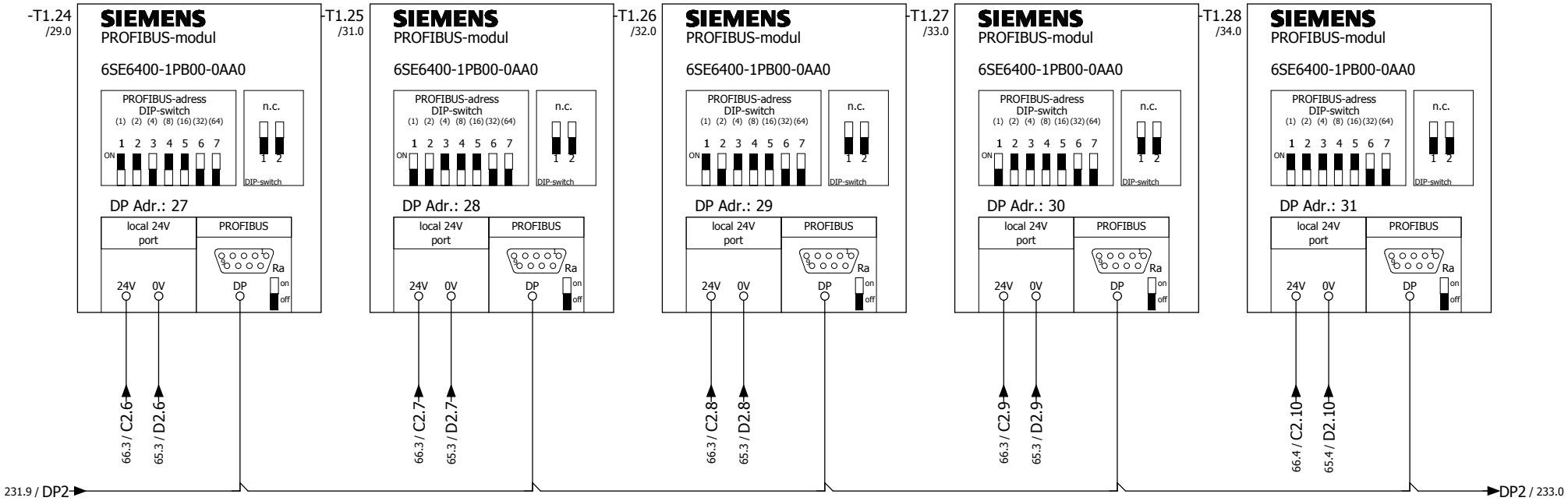

Frequenzwandler Rollenbahn Einlauf M24	Frequenzwandler Rollenbahn Einlauf M25	Frequenzwandler Rollenbahn Einlauf M26	Frequenzwandler Rollenbahn Einlauf M27	Frequenzwandler Rollenbahn Einlauf M28
frequency converter roll conveyor inlet M24	frequency converter roll conveyor inlet M25	frequency converter roll conveyor inlet M26	frequency converter roll conveyor inlet M27	frequency converter roll conveyor inlet M28

Duferco Clabecq

Management codes				Document identification				
5.3.0.0	CE	000	DW	QTPC	L04	ROSL	D	0049
System	Phase	Area	Typology	Project	Lot	Company	D/S	Number

Rev.	Date	Description	Prepared	Checked	Approved	Date 30.01.2012	Duferco (SBM 2) Schaltschrank	RÖSLER finding a better way ...	Control DP SA2	= ES	01-130070 00	Page 232
						Dus				+ S		from 565
							in place of	Replaced by				

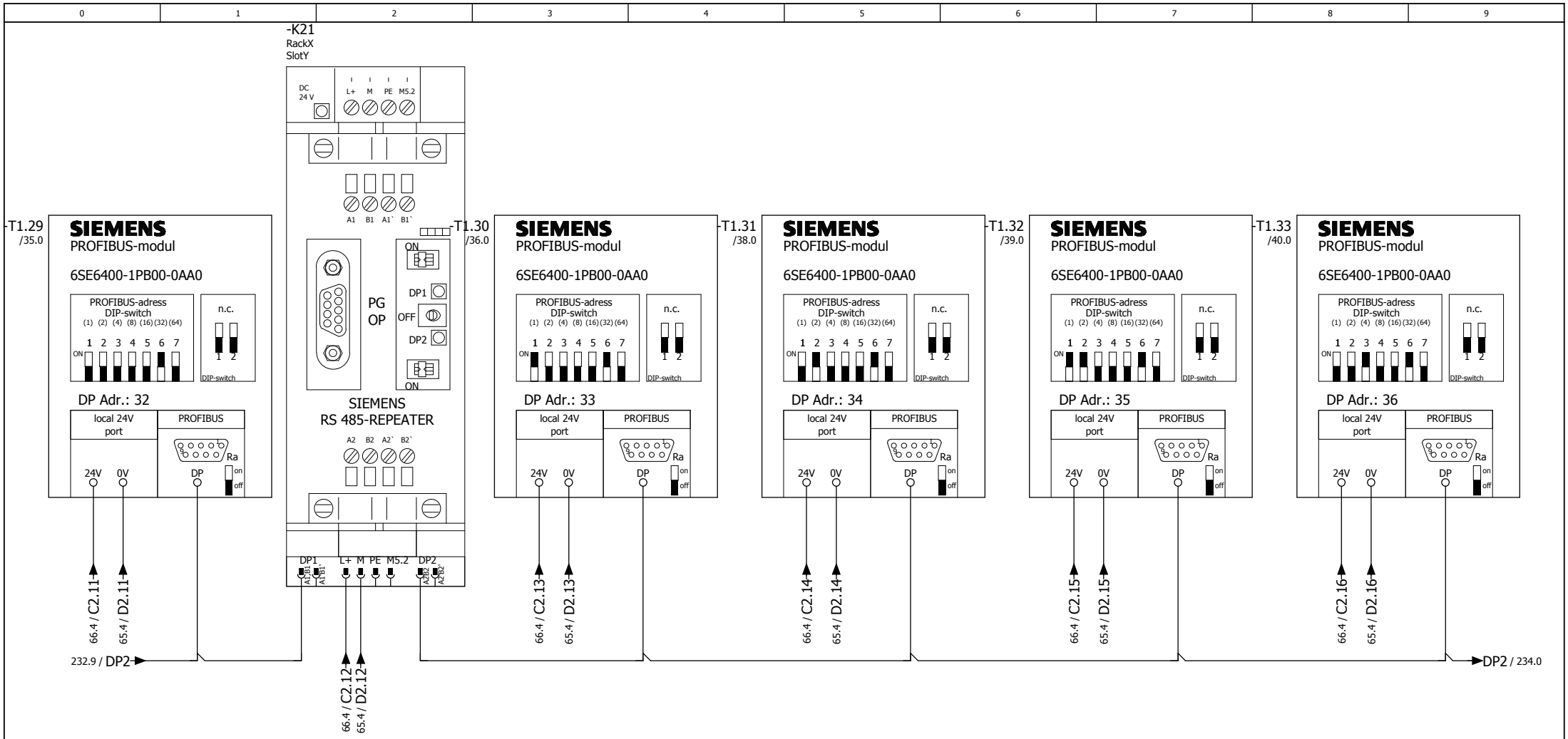

Frequenzwandler
Rollenbahn
Einlauf
M29

frequency converter
roll
conveyor
inlet M29

Frequenzwandler
Rollenbahn
Einlauf
M30

frequency converter
roll
conveyor
inlet M30

Frequenzwandler
Rollenbahn
Einlauf
M31

frequency converter
roll
conveyor
inlet M31

Frequenzwandler
Rollenbahn
Einlauf
M32

frequency converter
roll
conveyor
inlet M32

Frequenzwandler
Rollenbahn
Einlauf
M33

frequency converter
roll
conveyor
inlet M33

Duferco Clabecq

Management codes				Document identification				
5.3.0.0	CE	000	DW	QTPC	L04	ROSL	D	0049
System	Phase	Area	Typology	Project	Lot	Company	D/S	Number

Rev.	Date	Description	Prepared	Checked	Approved			
						Date	30.01.2012	
						Dus		

Duferco (SBM 2) Schaltschrank

in place of | Replaced by

RÖSLER finding a better way ...

Control DP SA2

= ES
+ S

01-130070 00

Page 233
from 565

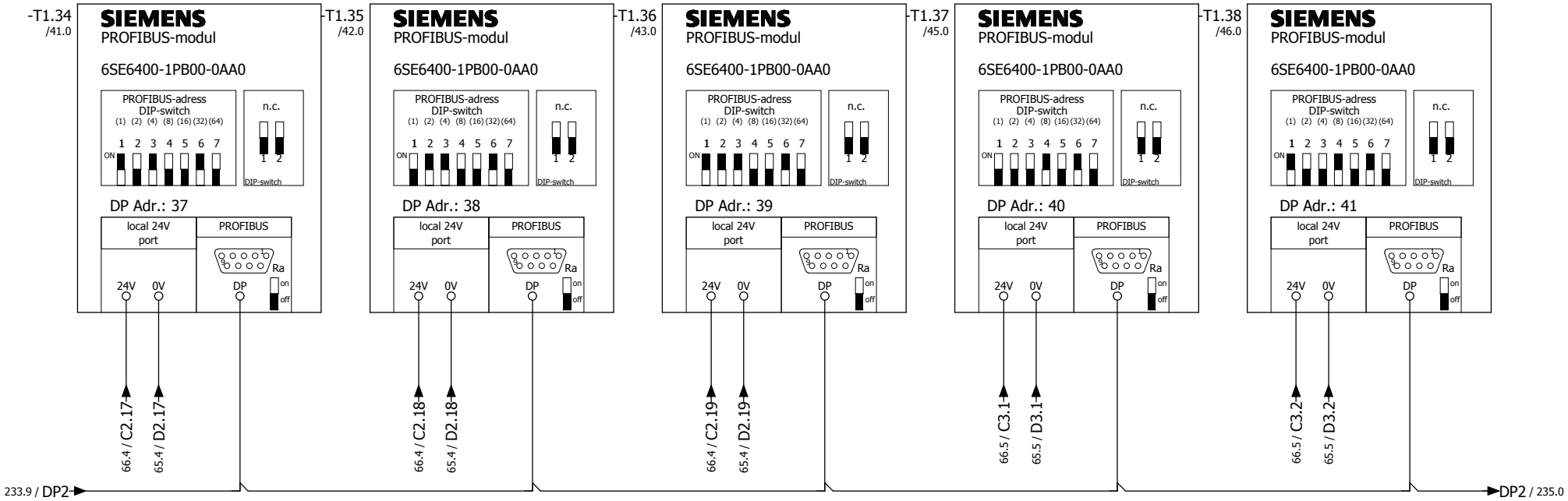

Frequenzwandler
Rollenbahn
Einlauf
M34

frequency converter
roll
conveyor
inlet M34

Frequenzwandler
Rollenbahn
Einlauf
M35

frequency converter
roll
conveyor
inlet M35

Frequenzwandler
Rollenbahn
Einlauf
M36

frequency converter
roll
conveyor
inlet M36

Frequenzwandler
Rollenbahn
Einlauf
M37

frequency converter
roll
conveyor
inlet M37

Frequenzwandler
Rollenbahn
Einlauf
M38

frequency converter
roll
conveyor
inlet M38

Duferco Clabecq

Management codes				Document identification				
5.3.0.0	CE	000	DW	QTPC	L04	ROSL	D	0049
System	Phase	Area	Typology	Project	Lot	Company	D/S	Number

Rev.	Date	Description	Prepared	Checked	Approved			
						Date	30.01.2012	
						Dus		
							Duferco (SBM 2) Schaltschrank	
							in place of	Replaced by

RÖSLER finding a better way ...

Control DP SA2

= ES
+ S

01-130070 00

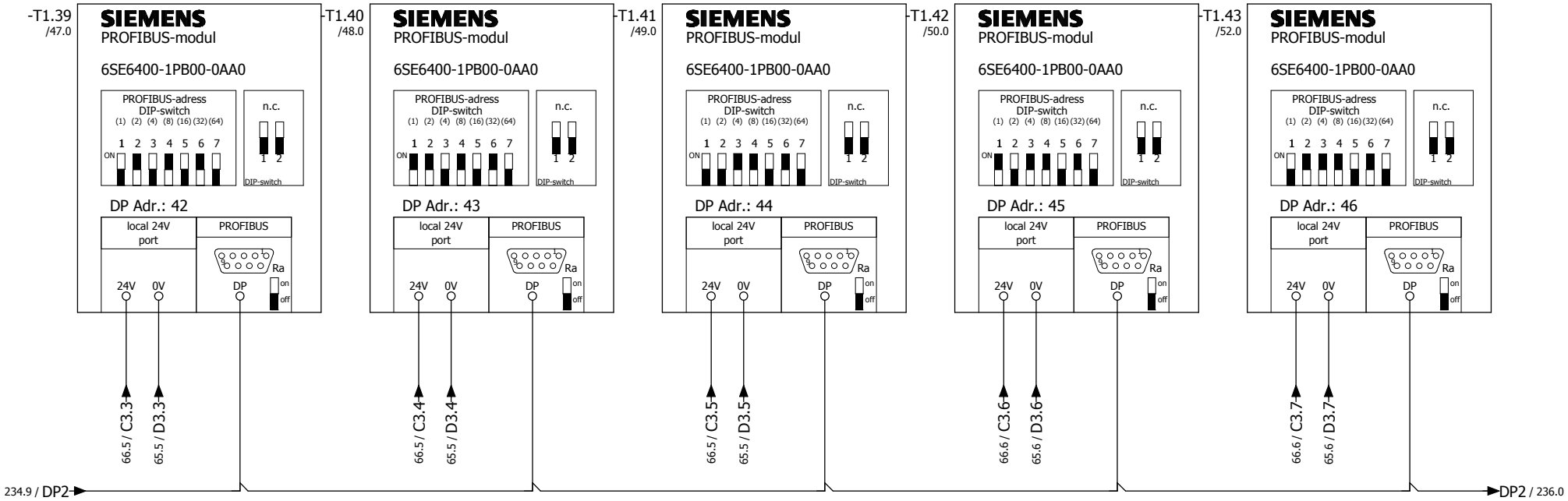

Frequenzwandler Rollenbahn Einlauf M39	Frequenzwandler Rollenbahn Einlauf M40	Frequenzwandler Rollenbahn Einlauf M41	Frequenzwandler Rollenbahn Einlauf M42	Frequenzwandler Rollenbahn Einlauf M43
frequency converter roll conveyor inlet M39	frequency converter roll conveyor inlet M40	frequency converter roll conveyor inlet M41	frequency converter roll conveyor inlet M42	frequency converter roll conveyor inlet M43

Duferco Clabecq

Management codes				Document identification				
5.3.0.0	CE	000	DW	QTPC	L04	ROSL	D	0049
System	Phase	Area	Typology	Project	Lot	Company	D/S	Number

Rev.	Date	Description	Prepared	Checked	Approved	Date 30.01.2012	Duferco (SBM 2) Schaltschrank	RÖSLER finding a better way ...	Control DP SA2	= ES	01-130070 00	Page 235
						Dus				+ S		from 565
							in place of	Replaced by				

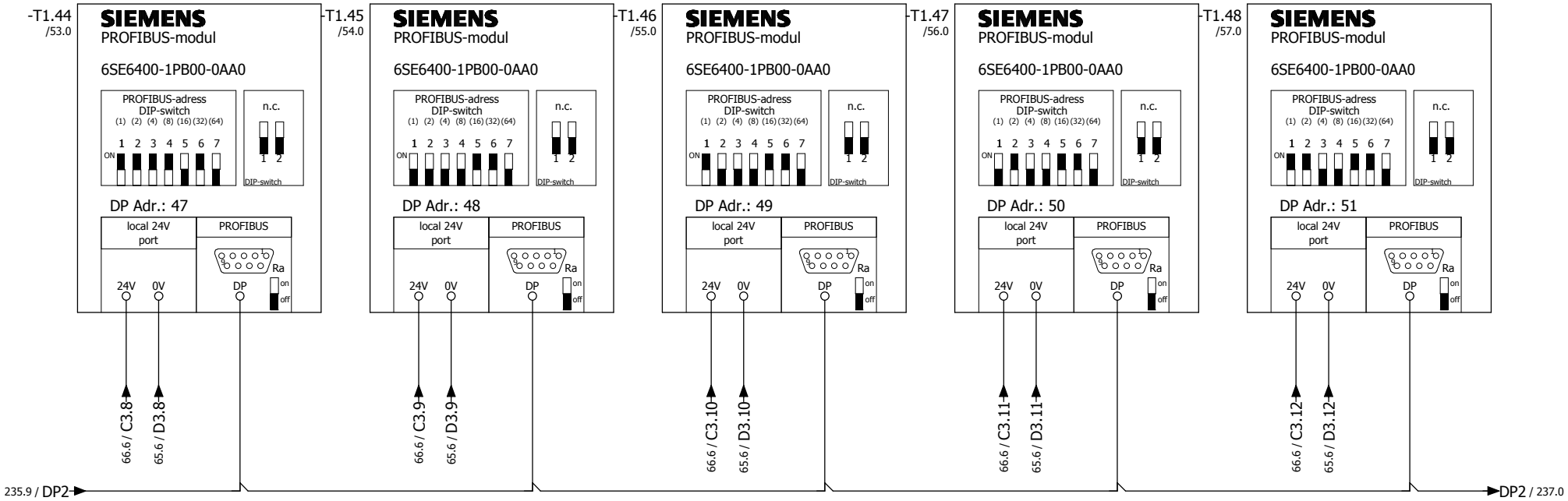

Frequenzwandler Rollenbahn Einlauf M44	Frequenzwandler Rollenbahn Einlauf M45	Frequenzwandler Rollenbahn Einlauf M46	Frequenzwandler Rollenbahn Einlauf M47	Frequenzwandler Rollenbahn Einlauf M48
frequency converter roll conveyor inlet M44	frequency converter roll conveyor inlet M45	frequency converter roll conveyor inlet M46	frequency converter roll conveyor inlet M47	frequency converter roll conveyor inlet M48

Duferco Clabecq

Management codes				Document identification				
5.3.0.0	CE	000	DW	QTPC	L04	ROSL	D	0049
System	Phase	Area	Typology	Project	Lot	Company	D/S	Number

Rev.	Date	Description	Prepared	Checked	Approved	Date 30.01.2012	Duferco (SBM 2) Schaltschrank	RÖSLER finding a better way ...	Control DP SA2	= ES	01-130070 00	Page 236
						Dus				+ S		from 565
							in place of	Replaced by				

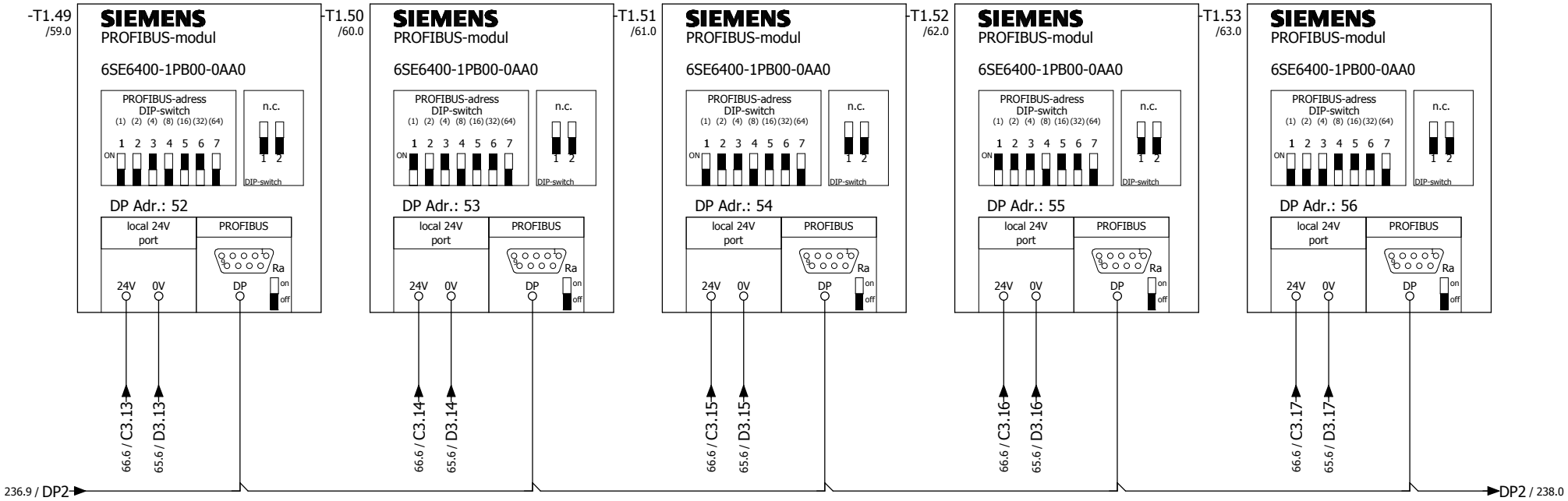

Frequenzwandler
Rollenbahn
Einlauf
M49

frequency converter
roll
conveyor
inlet M49

Frequenzwandler
Rollenbahn
Einlauf
M50

frequency converter
roll
conveyor
inlet M50

Frequenzwandler
Rollenbahn
Einlauf
M51

frequency converter
roll
conveyor
inlet M51

Frequenzwandler
Rollenbahn
Einlauf
M52

frequency converter
roll
conveyor
inlet M52

Frequenzwandler
Rollenbahn
Einlauf
M53

frequency converter
roll
conveyor
inlet M53

Duferco Clabecq

Management codes				Document identification				
5.3.0.0	CE	000	DW	QTPC	L04	ROSL	D	0049
System	Phase	Area	Typology	Project	Lot	Company	D/S	Number

Rev.	Date	Description	Prepared	Checked	Approved			
						Date	30.01.2012	
						Dus		

Duferco (SBM 2) Schaltschrank

in place of | Replaced by

RÖSLER finding a better way ...

Control DP SA2

= ES
+ S

01-130070 00

Page 237
from 565

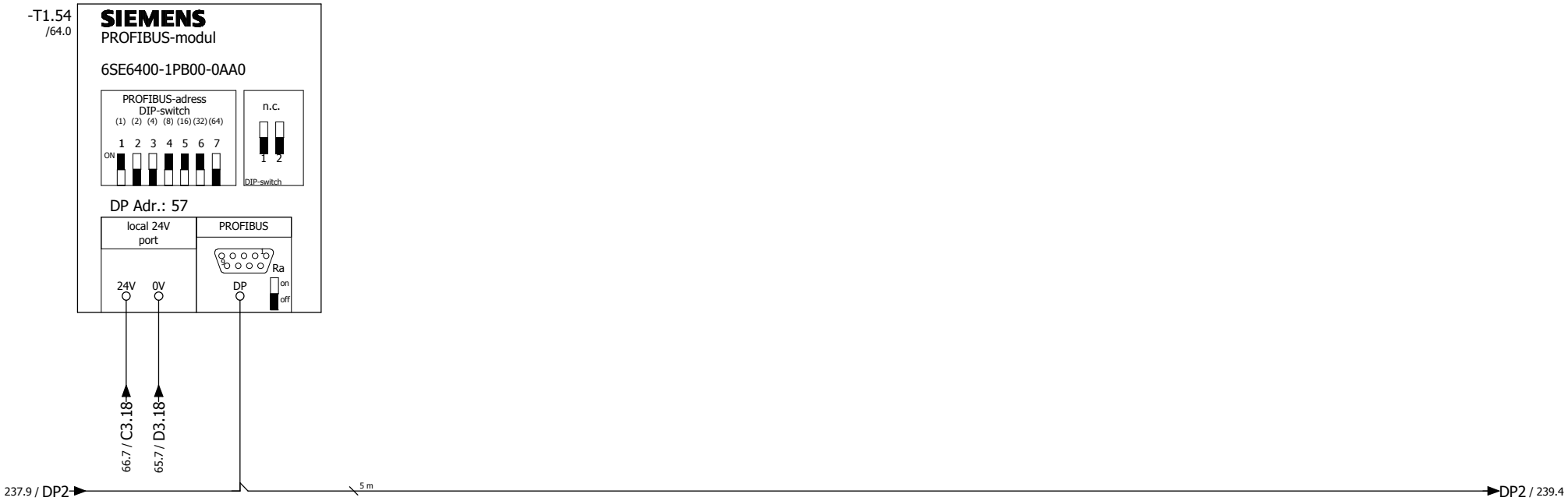

Frequenzwandler
Rollenbahn
Einlauf
M54

frequency converter
roll
conveyor
inlet M54

Duferco Clabecq

Management codes				Document identification				
5.3.0.0	CE	000	DW	QTPC	L04	ROSL	D	0049
System	Phase	Area	Typology	Project	Lot	Company	D/S	Number

Rev.	Date	Description	Prepared	Checked	Approved			
						Date	30.01.2012	
						Dus		
							Duferco (SBM 2) Schaltschrank	
							in place of	Replaced by

RÖSLER finding a better way ...

Control DP SA2

= ES
+ S

01-130070 00

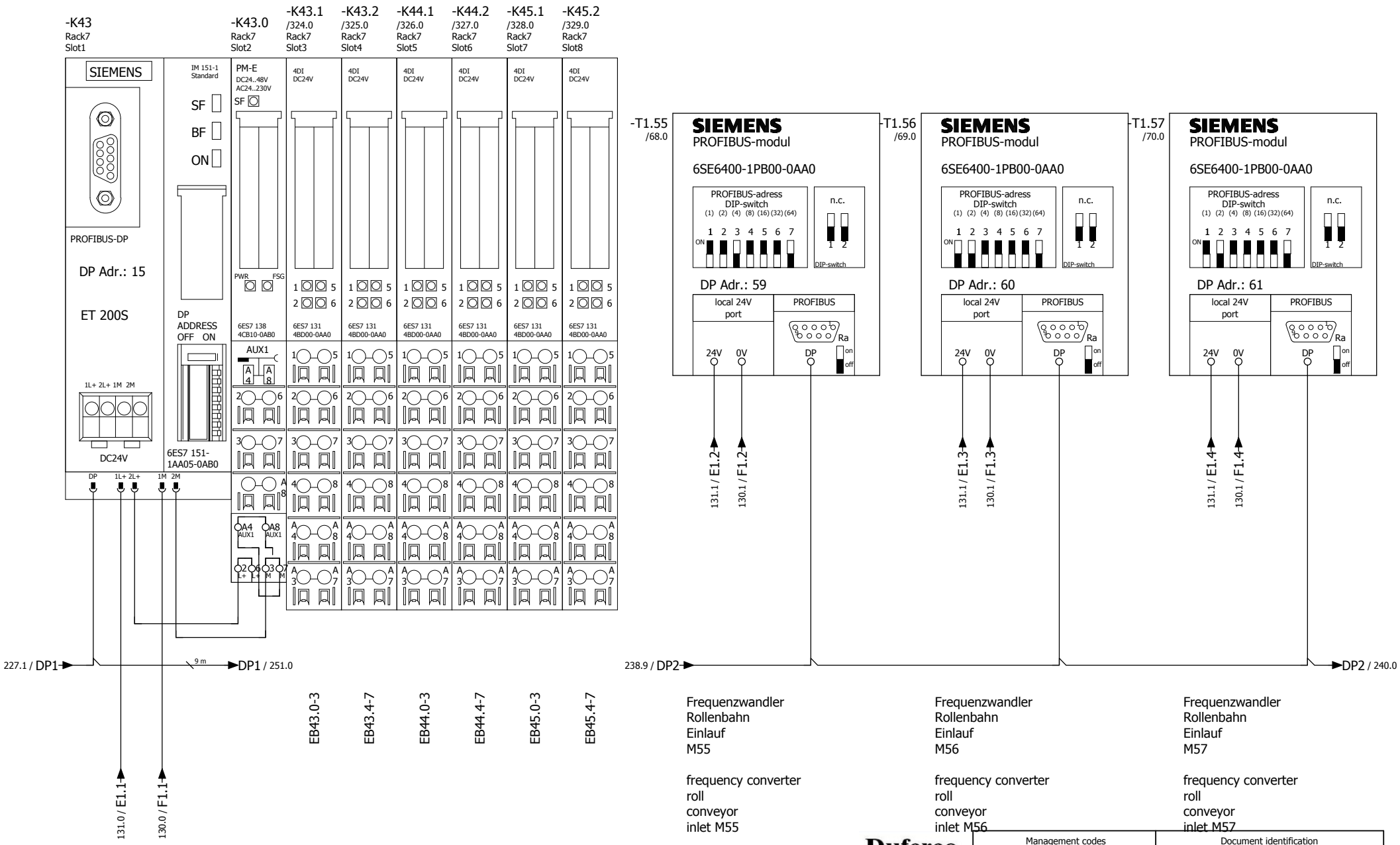

Duferco Clabecq

Management codes				Document identification				
5.3.0.0	CE	000	DW	QTPC	L04	ROSL	D	0049
System	Phase	Area	Typology	Project	Lot	Company	D/S	Number

238 240

Rev.	Date	Description	Prepared	Checked	Approved			
						Date	30.01.2012	
						Dus		

Duferco (SBM 2) Schaltschrank

in place of | Replaced by

RÖSLER finding a better way ...

Control DP ET 200S + FU SA3

= ES
+ S

01-130070 00

Page 239
from 565

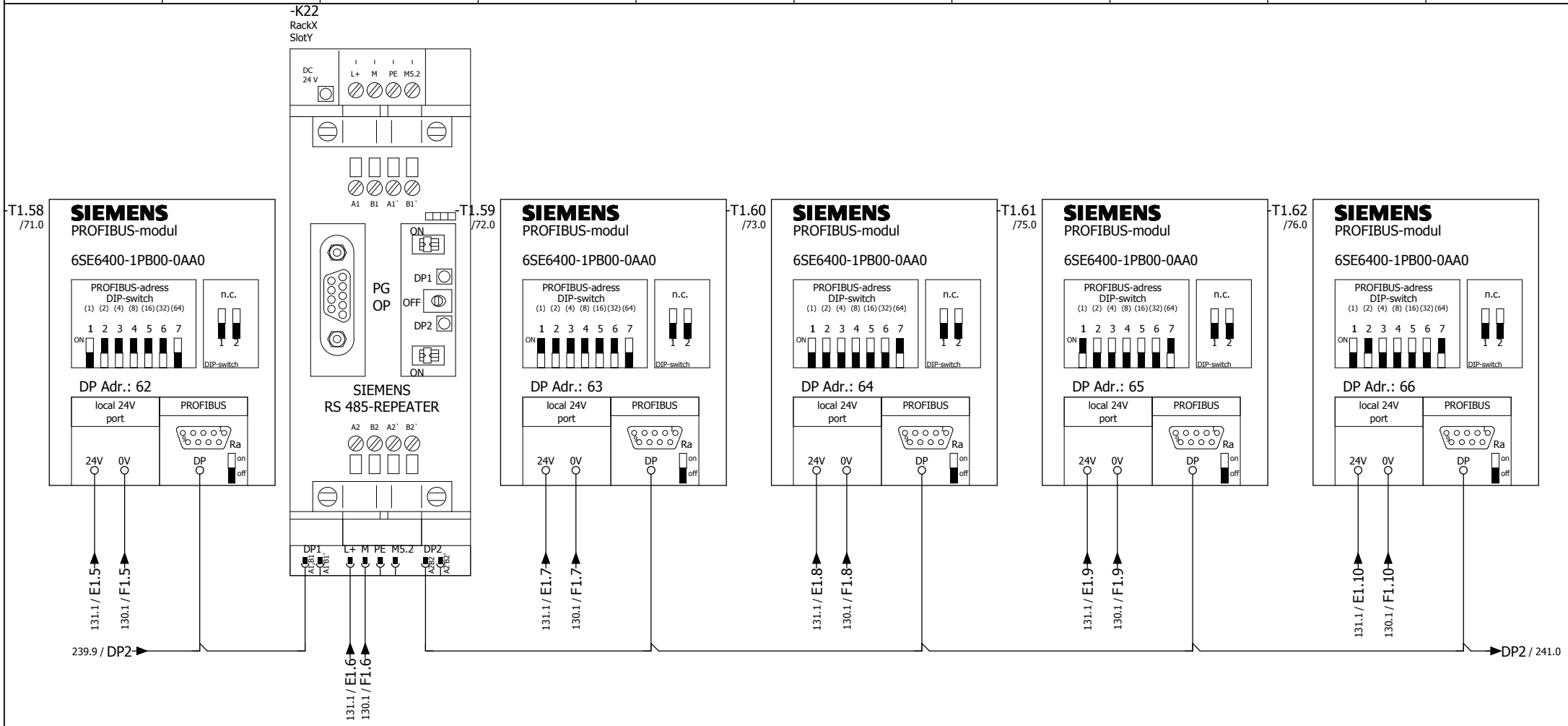

Frequenzwandler
Rollenbahn
Einlauf
M58

frequency converter
roll
conveyor
inlet M58

Frequenzwandler
Rollenbahn
Einlauf
M59

frequency converter
roll
conveyor
inlet M59

Frequenzwandler
Rollenbahn
Einlauf
M60

frequency converter
roll
conveyor
inlet M60

Frequenzwandler
Rollenbahn
Einlauf
M61

frequency converter
roll
conveyor
inlet M61

Frequenzwandler
Rollenbahn
Einlauf
M62

frequency converter
roll
conveyor
inlet M62

Duferco Clabecq

Management codes				Document identification				
5.3.0.0	CE	000	DW	QTPC	L04	ROSL	D	0049
System	Phase	Area	Typology	Project	Lot	Company	D/S	Number

Rev.	Date	Description	Prepared	Checked	Approved			
						Date	30.01.2012	
						Dus		
							in place of	Replaced by

Duferco (SBM 2) Schaltschrank

RÖSLER finding a better way ...

Control DP SA3

= ES
+ S

01-130070 00

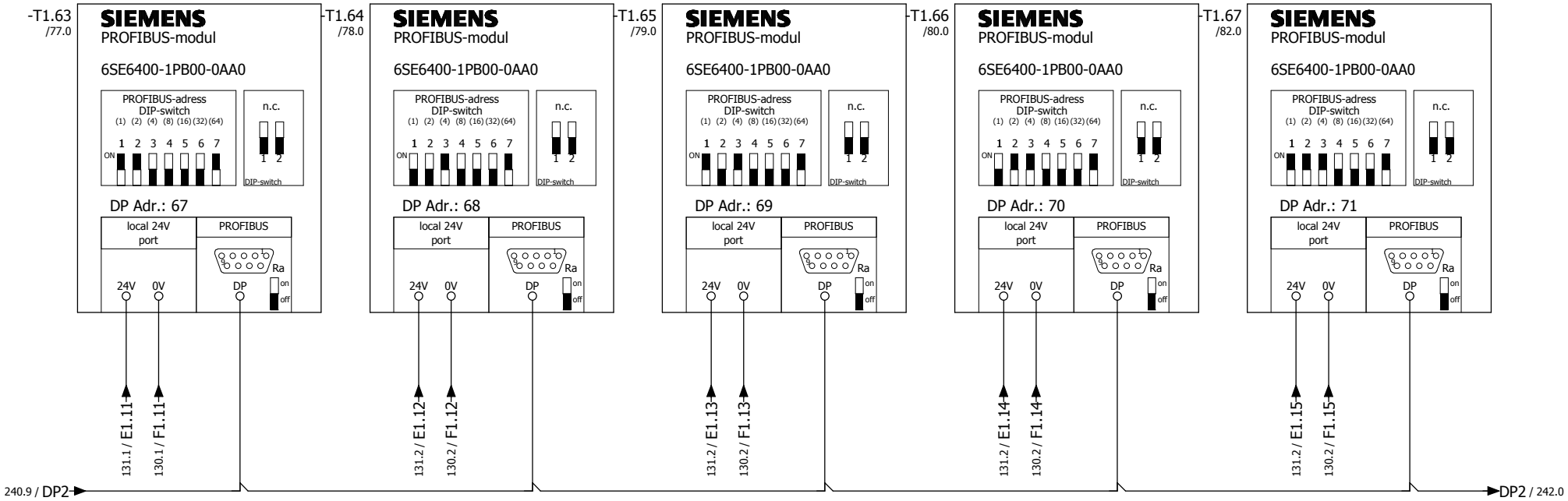

Frequenzwandler Rollenbahn Einlauf M63	Frequenzwandler Rollenbahn Einlauf M64	Frequenzwandler Rollenbahn Einlauf M65	Frequenzwandler Rollenbahn Einlauf M66	Frequenzwandler Rollenbahn Einlauf M67
frequency converter roll conveyor inlet M63	frequency converter roll conveyor inlet M64	frequency converter roll conveyor inlet M65	frequency converter roll conveyor inlet M66	frequency converter roll conveyor inlet M67

Duferco Clabecq

Management codes				Document identification				
5.3.0.0	CE	000	DW	QTPC	L04	ROSL	D	0049
System	Phase	Area	Typology	Project	Lot	Company	D/S	Number

Rev.	Date	Description	Prepared	Checked	Approved			
						Date	30.01.2012	
						Dus		

Duferco (SBM 2) Schaltschrank

in place of | Replaced by

RÖSLER finding a better way ...

Control DP SA3

= ES
+ S

01-130070 00

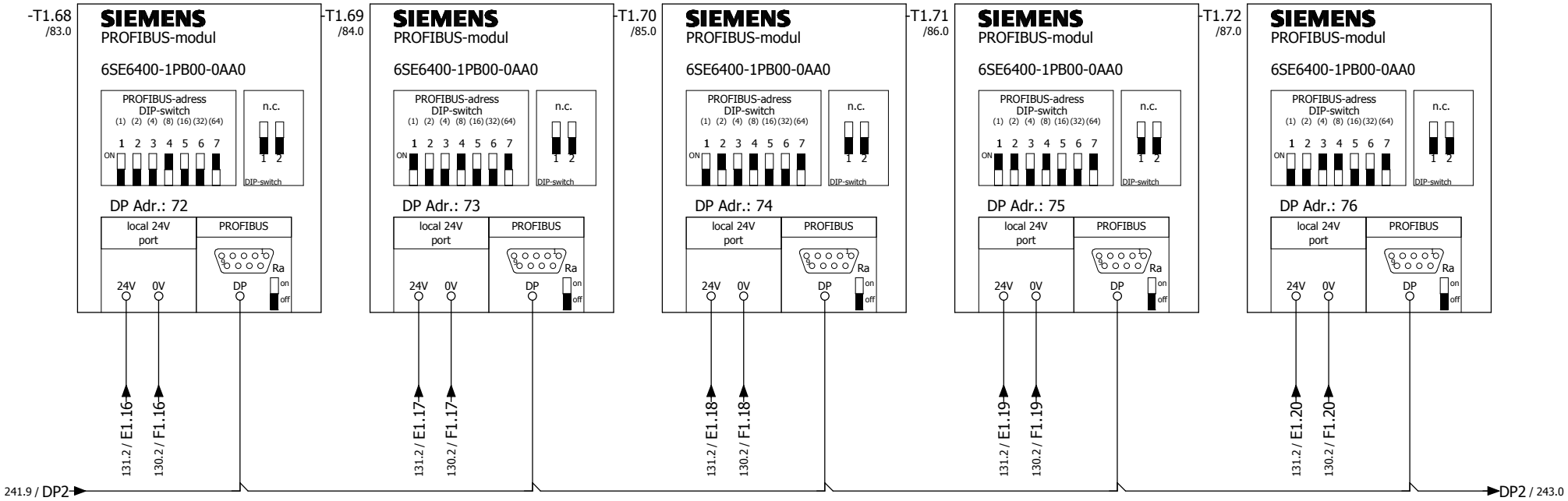

Frequenzwandler
Rollenbahn
Einlauf
M68

frequency converter
roll
conveyor
inlet M68

Frequenzwandler
Rollenbahn
Einlauf
M69

frequency converter
roll
conveyor
inlet M69

Frequenzwandler
Rollenbahn
Einlauf
M70

frequency converter
roll
conveyor
inlet M70

Frequenzwandler
Rollenbahn
Einlauf
M71

frequency converter
roll
conveyor
inlet M71

Frequenzwandler
Rollenbahn
Einlauf
M72

frequency converter
roll
conveyor
inlet M72

Duferco Clabecq

Management codes				Document identification				
5.3.0.0	CE	000	DW	QTPC	L04	ROSL	D	0049
System	Phase	Area	Typology	Project	Lot	Company	D/S	Number

Rev.	Date	Description	Prepared	Checked	Approved			
						Date	30.01.2012	
						Dus		

Duferco (SBM 2) Schaltschrank

in place of | Replaced by

RÖSLER finding a better way ...

Control DP SA3

= ES
+ S

01-130070 00

Page 242
from 565

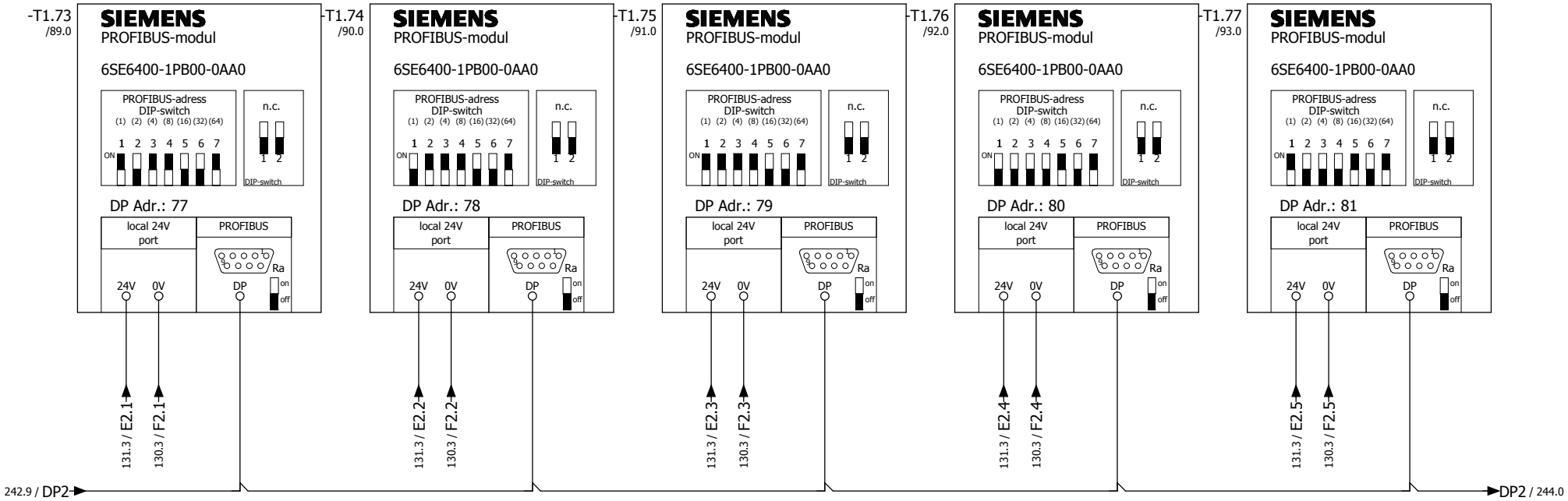

Frequenzwandler Rollenbahn Einlauf M73	Frequenzwandler Rollenbahn Einlauf M74	Frequenzwandler Rollenbahn Einlauf M75	Frequenzwandler Rollenbahn Einlauf M76	Frequenzwandler Rollenbahn Einlauf M77
frequency converter roll conveyor inlet M73	frequency converter roll conveyor inlet M74	frequency converter roll conveyor inlet M75	frequency converter roll conveyor inlet M76	frequency converter roll conveyor inlet M77

Duferco Clabecq

Management codes				Document identification				
5.3.0.0	CE	000	DW	QTPC	L04	ROSL	D	0049
System	Phase	Area	Typology	Project	Lot	Company	D/S	Number

Rev.	Date	Description	Prepared	Checked	Approved			
						Date	30.01.2012	
						Dus		

Duferco (SBM 2) Schaltschrank

in place of | Replaced by

RÖSLER finding a better way ...

Control DP SA3

= ES
+ S

01-130070 00

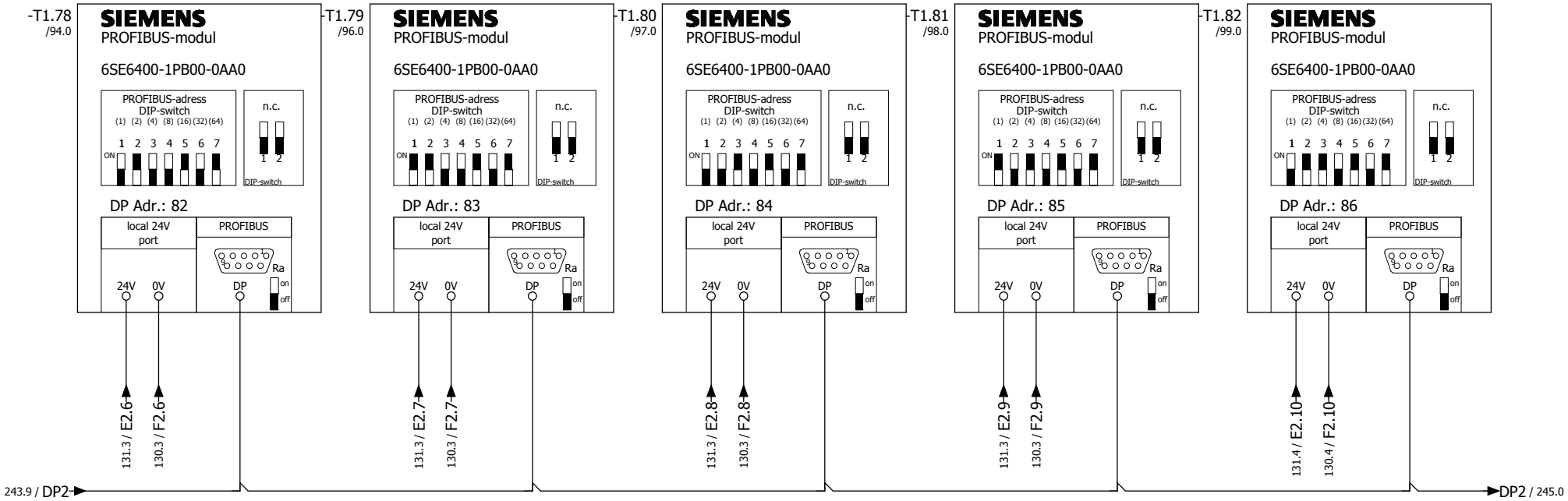

Frequenzwandler
Rollenbahn
Einlauf
M78

frequency converter
roll
conveyor
inlet M78

Frequenzwandler
Rollenbahn
Einlauf
M79

frequency converter
roll
conveyor
inlet M79

Frequenzwandler
Rollenbahn
Einlauf
M80

frequency converter
roll
conveyor
inlet M80

Frequenzwandler
Rollenbahn
Einlauf
M81

frequency converter
roll
conveyor
inlet M81

Frequenzwandler
Rollenbahn
Einlauf
M82

frequency converter
roll
conveyor
inlet M82

Duferco Clabecq

Management codes				Document identification				
5.3.0.0	CE	000	DW	QTPC	L04	ROSL	D	0049
System	Phase	Area	Typology	Project	Lot	Company	D/S	Number

Rev.	Date	Description	Prepared	Checked	Approved			
						Date	30.01.2012	
						Dus		

Duferco (SBM 2) Schaltschrank

in place of | Replaced by

RÖSLER finding a better way ...

Control DP SA3

= ES
+ S

01-130070 00

Page 244
from 565

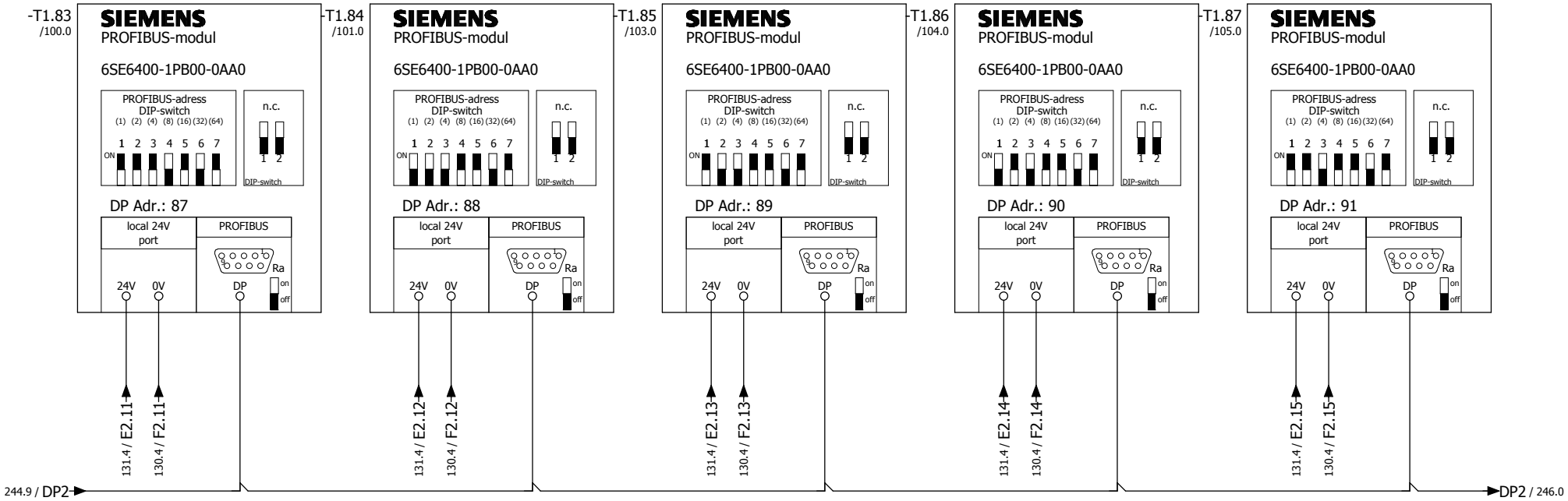

Frequenzwandler Rollenbahn Einlauf M83	Frequenzwandler Rollenbahn Einlauf M84	Frequenzwandler Rollenbahn Einlauf M85	Frequenzwandler Rollenbahn Einlauf M86	Frequenzwandler Rollenbahn Einlauf M87
frequency converter roll conveyor inlet M83	frequency converter roll conveyor inlet M84	frequency converter roll conveyor inlet M85	frequency converter roll conveyor inlet M86	frequency converter roll conveyor inlet M87

Duferco Clabecq

Management codes				Document identification				
5.3.0.0	CE	000	DW	QTPC	L04	ROSL	D	0049
System	Phase	Area	Typology	Project	Lot	Company	D/S	Number

Rev.	Date	Description	Prepared	Checked	Approved			
						Date	30.01.2012	
						Dus		
							Duferco (SBM 2) Schaltschrank	
							in place of	Replaced by

RÖSLER finding a better way ...

Control DP SA3

= ES
+ S

01-130070 00

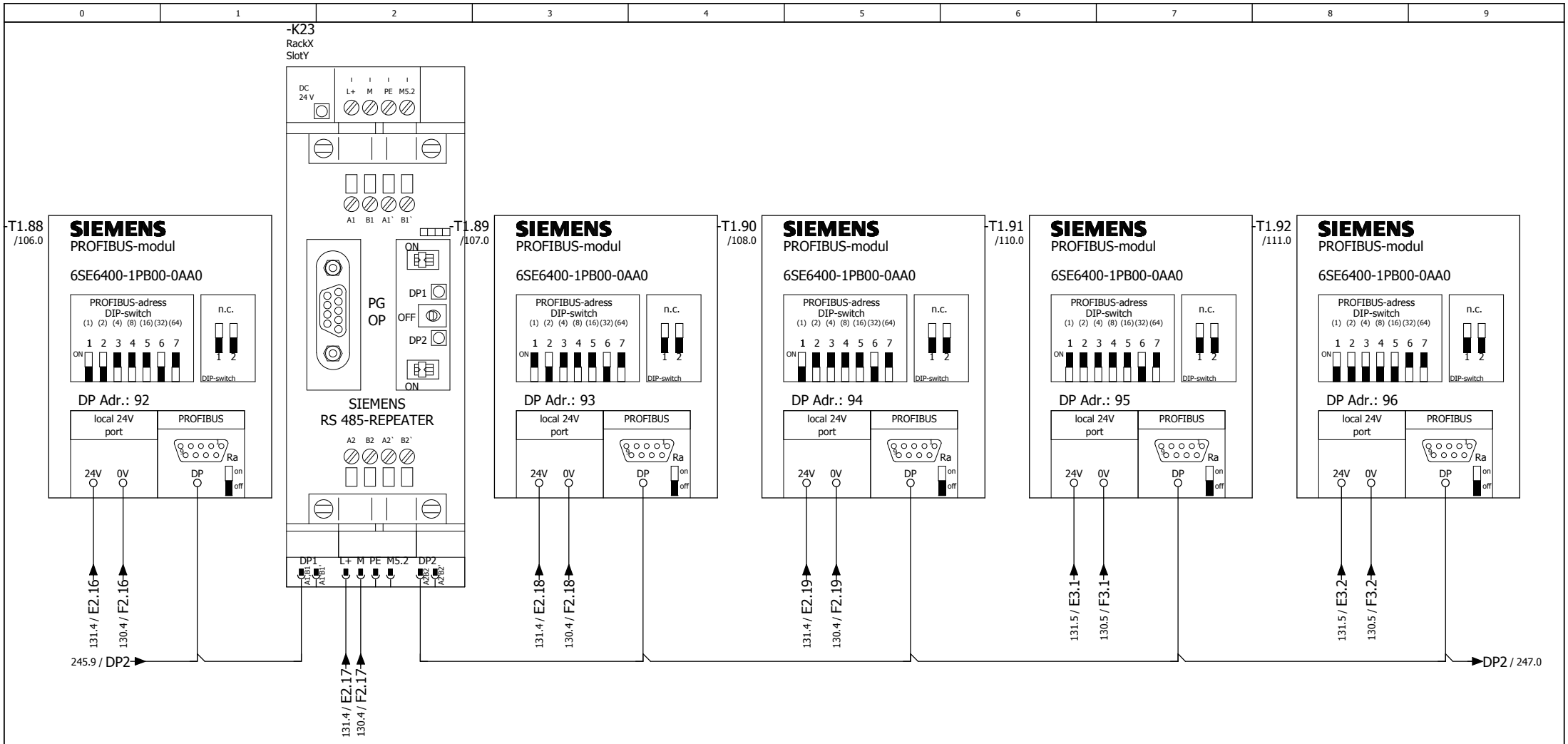

Frequenzwandler
Rollenbahn
Einlauf
M88

frequency converter
roll
conveyor
inlet M88

Frequenzwandler
Rollenbahn
Einlauf
M89

frequency converter
roll
conveyor
inlet M89

Frequenzwandler
Rollenbahn
Einlauf
M90

frequency converter
roll
conveyor
inlet M90

Frequenzwandler
Rollenbahn
Einlauf
M91

frequency converter
roll
conveyor
inlet M91

Frequenzwandler
Rollenbahn
Einlauf
M92

frequency converter
roll
conveyor
inlet M92

Duferco Clabecq

Management codes				Document identification				
5.3.0.0	CE	000	DW	QTPC	L04	ROSL	D	0049
System	Phase	Area	Typology	Project	Lot	Company	D/S	Number

Rev.	Date	Description	Prepared	Checked	Approved			
						Date	30.01.2012	
						Dus		

Duferco (SBM 2) Schaltschrank

in place of | Replaced by

RÖSLER finding a better way ...

Control DP SA3

= ES
+ S

01-130070 00

Page 246
from 565

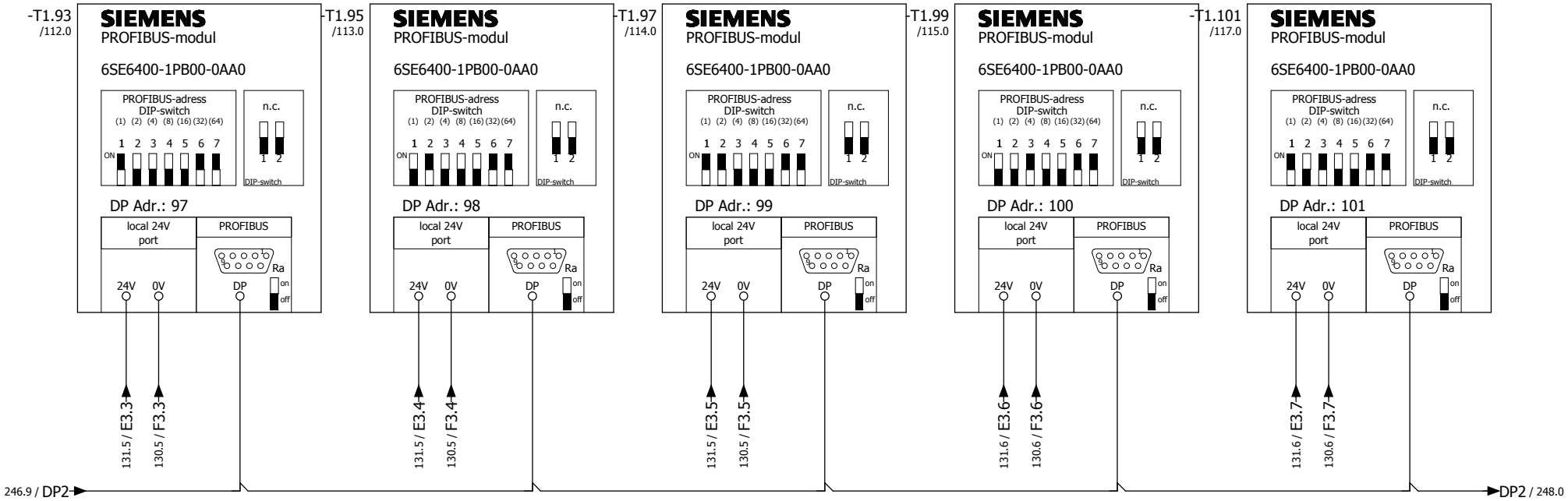

Frequenzwandler
Rollenbahn
Einlauf
M93

frequency converter
roll
conveyor
inlet M93

Frequenzwandler
Zwischenrollgang
zu Vorwärmer

frequency converter
roll conveyor
inside closed preheater

Frequenzwandler
Rollenbahn
Strahlanlage

frequency converter
roll
conveyor blasting system

Frequenzwandler
Zwischenrollgang
zu Lackieranlage

frequency converter
roll conveyor
inside closed painting installation

Frequenzwandler
Motor 1
Kettenförderer

frequency converter
Motor
1 chain conveyor

Duferco Clabecq

Management codes				Document identification				
5.3.0.0	CE	000	DW	QTPC	L04	ROSL	D	0049
System	Phase	Area	Typology	Project	Lot	Company	D/S	Number

Rev.	Date	Description	Prepared	Checked	Approved			
						Date	30.01.2012	
						Dus		

Duferco (SBM 2) Schaltschrank

in place of | Replaced by

RÖSLER finding a better way ...

Control DP SA3

= ES
+ S

01-130070 00

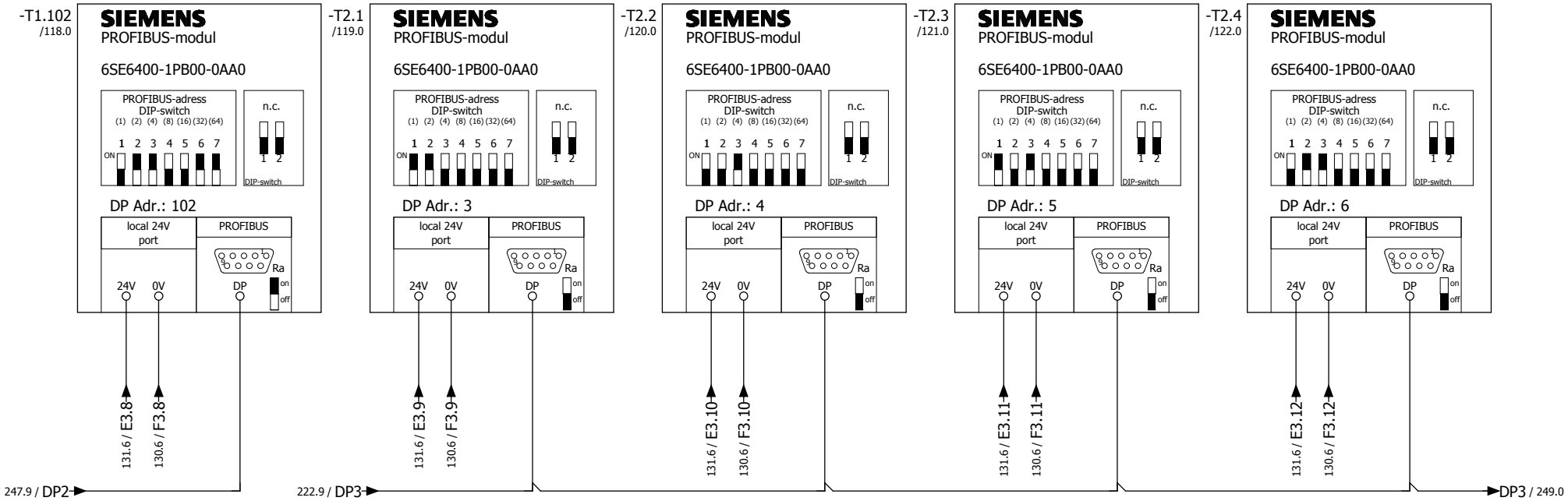

Frequenzwandler
Motor 2
Kettenförderer

frequency converter
Motor
2 chain conveyor

Frequenzwandler
Rollenbahn
Auslauf
M1

frequency converter
roll
conveyor
outlet M1

Frequenzwandler
Rollenbahn
Auslauf
M2

frequency converter
roll
conveyor
outlet M2

Frequenzwandler
Rollenbahn
Auslauf
M3

frequency converter
roll
conveyor
outlet M3

Frequenzwandler
Rollenbahn
Auslauf
M4

frequency converter
roll
conveyor
outlet M4

Duferco Clabecq

Management codes				Document identification				
5.3.0.0	CE	000	DW	QTPC	L04	ROSL	D	0049
System	Phase	Area	Typology	Project	Lot	Company	D/S	Number

Rev.	Date	Description	Prepared	Checked	Approved			
						Date	30.01.2012	
						Dus		

Duferco (SBM 2) Schaltschrank

in place of | Replaced by

RÖSLER finding a better way ...

Control DP SA3

= ES
+ S

01-130070 00

Page 248
from 565

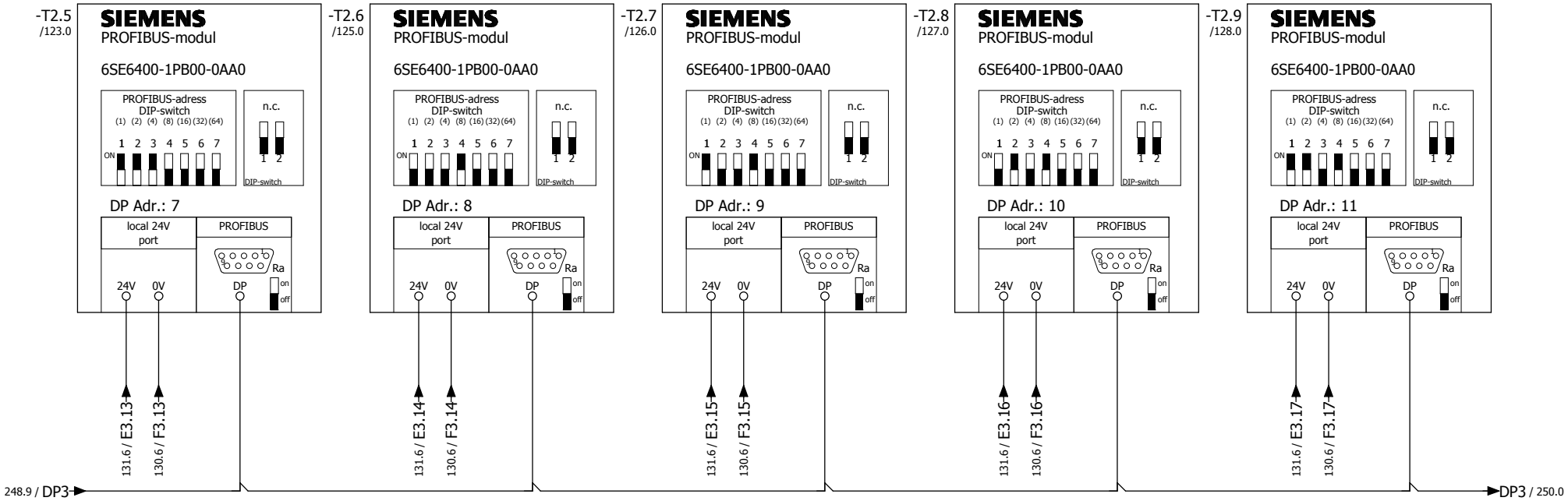

Frequenzwandler
Rollenbahn
Auslauf
M5

frequency converter
roll
conveyor
outlet M5

Frequenzwandler
Rollenbahn
Auslauf
M6

frequency converter
roll
conveyor
outlet M6

Frequenzwandler
Rollenbahn
Auslauf
M7

frequency converter
roll
conveyor
outlet M7

Frequenzwandler
Rollenbahn
Auslauf
M8

frequency converter
roll
conveyor
outlet M8

Frequenzwandler
Rollenbahn
Auslauf
M9

frequency converter
roll
conveyor
outlet M9

Duferco Clabecq

Management codes				Document identification				
5.3.0.0	CE	000	DW	QTPC	L04	ROSL	D	0049
System	Phase	Area	Typology	Project	Lot	Company	D/S	Number

Rev.	Date	Description	Prepared	Checked	Approved			
						Date	30.01.2012	
						Dus		

Duferco (SBM 2) Schaltschrank

in place of | Replaced by

RÖSLER finding a better way ...

Control DP SA3

= ES
+ S

01-130070 00

Page 249
from 565

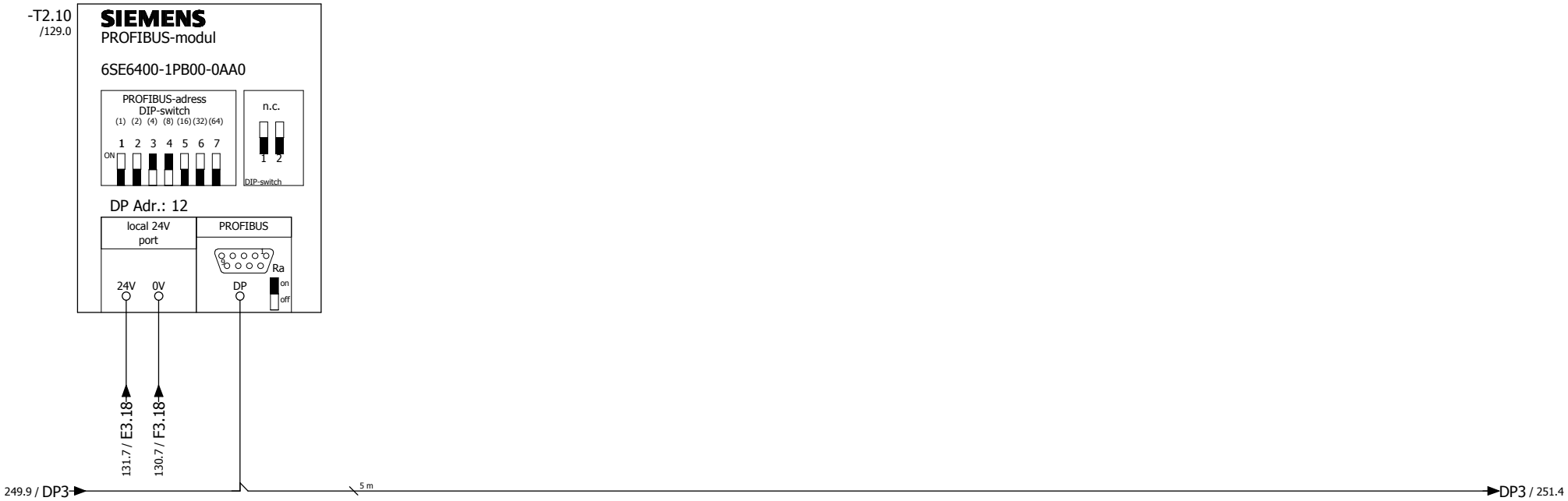

Frequenzwandler
Rollenbahn
Auslauf
M10

frequency converter
roll
conveyor
outlet M10

Duferco Clabecq

Management codes				Document identification				
5.3.0.0	CE	000	DW	QTPC	L04	ROSL	D	0049
System	Phase	Area	Typology	Project	Lot	Company	D/S	Number

Rev.	Date	Description	Prepared	Checked	Approved	Date 30.01.2012	Duferco (SBM 2) Schaltschrank	RÖSLER finding a better way ...	Control DP SA3	= ES	Page 250
						Dus				+ S	
							in place of	Replaced by		01-130070 00	from 565

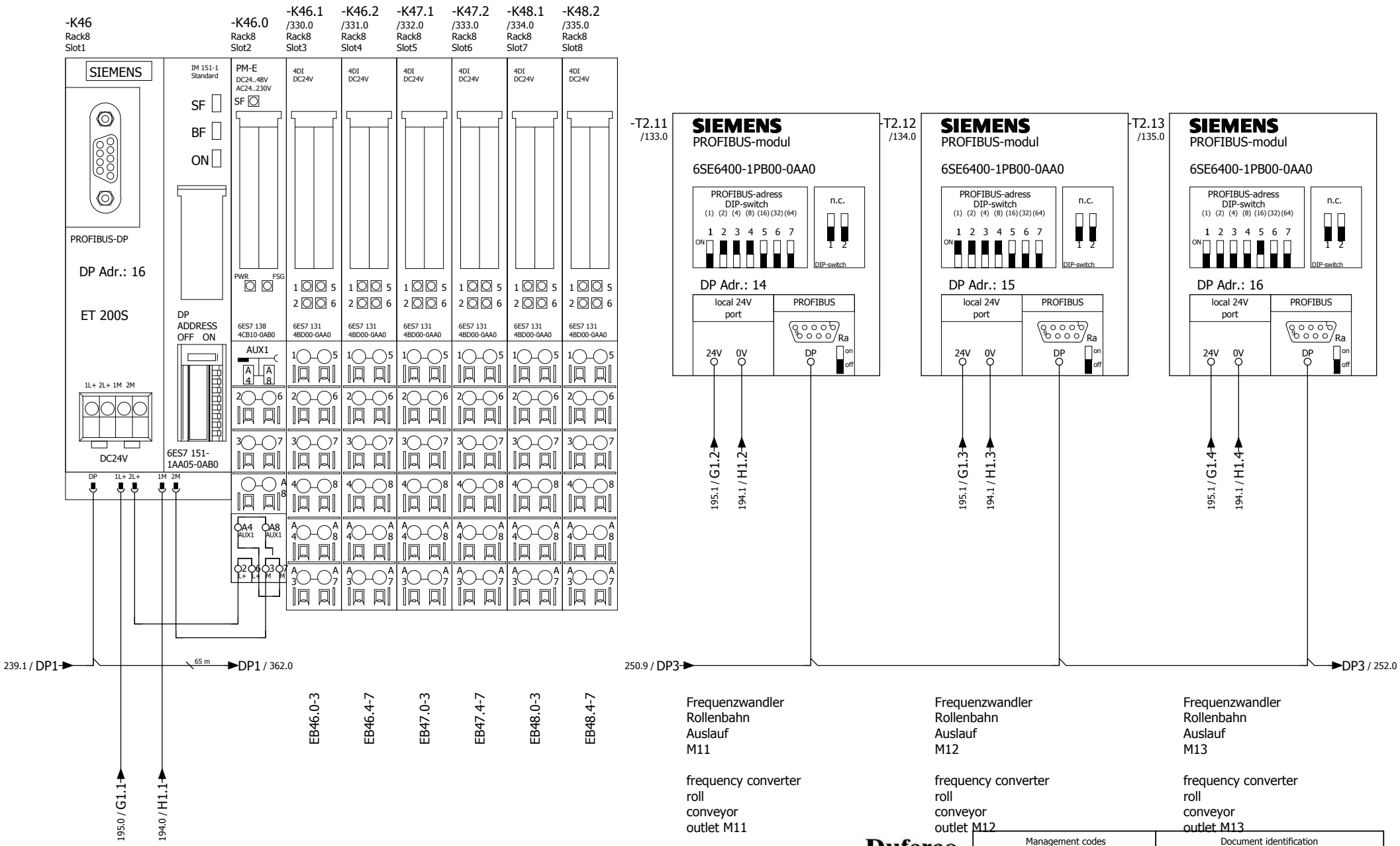

Duferco Clabecq

Management codes				Document identification				
5.3.0.0	CE	000	DW	QTPC	L04	ROSL	D	0049
System	Phase	Area	Typology	Project	Lot	Company	D/S	Number

250 252

Rev.	Date	Description	Prepared	Checked	Approved			
						Date	30.01.2012	
						Dus		

Duferco (SBM 2) Schaltschrank

in place of | Replaced by

RÖSLER finding a better way ...

Control DP ET 200S + FU SA4

= ES
+ S

01-130070 00

Page 251
from 565

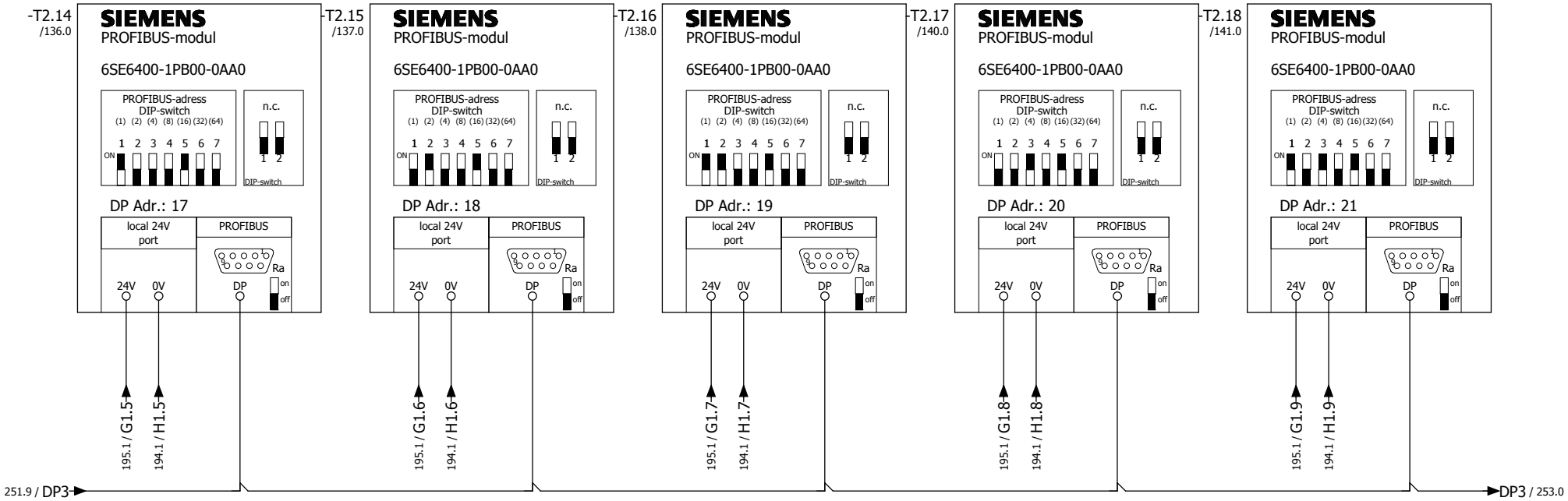

Frequenzwandler Rollenbahn Auslauf M14	Frequenzwandler Rollenbahn Auslauf M15	Frequenzwandler Rollenbahn Auslauf M16	Frequenzwandler Rollenbahn Auslauf M17	Frequenzwandler Rollenbahn Auslauf M18
frequency converter roll conveyor outlet M14	frequency converter roll conveyor outlet M15	frequency converter roll conveyor outlet M16	frequency converter roll conveyor outlet M17	frequency converter roll conveyor outlet M18

Duferco Clabecq

Management codes				Document identification				
5.3.0.0	CE	000	DW	QTPC	L04	ROSL	D	0049
System	Phase	Area	Typology	Project	Lot	Company	D/S	Number

Rev.	Date	Description	Prepared	Checked	Approved			
						Date	30.01.2012	
						Dus		

Duferco (SBM 2) Schaltschrank

in place of | Replaced by

RÖSLER finding a better way ...

Control DP SA4

= ES
+ S

01-130070 00

Page 252
from 565

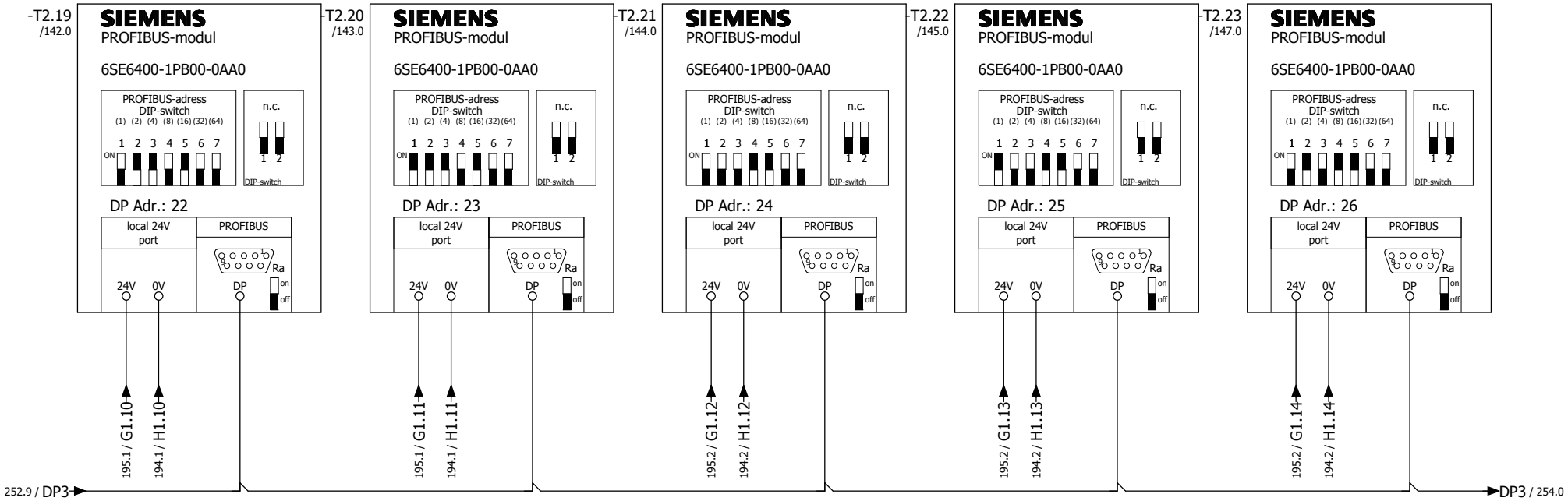

Frequenzwandler
Rollenbahn
Auslauf
M19

frequency converter
roll
conveyor
outlet M19

Frequenzwandler
Rollenbahn
Auslauf
M20

frequency converter
roll
conveyor
outlet M20

Frequenzwandler
Rollenbahn
Auslauf
M21

frequency converter
roll
conveyor
outlet M21

Frequenzwandler
Rollenbahn
Auslauf
M22

frequency converter
roll
conveyor
outlet M22

Frequenzwandler
Rollenbahn
Auslauf
M23

frequency converter
roll
conveyor
outlet M23

Duferco Clabecq

Management codes				Document identification				
5.3.0.0	CE	000	DW	QTPC	L04	ROSL	D	0049
System	Phase	Area	Typology	Project	Lot	Company	D/S	Number

Rev.	Date	Description	Prepared	Checked	Approved			
						Date	30.01.2012	
						Dus		

Duferco (SBM 2) Schaltschrank

in place of | Replaced by

RÖSLER finding a better way ...

Control DP SA4

= ES
+ S

01-130070 00

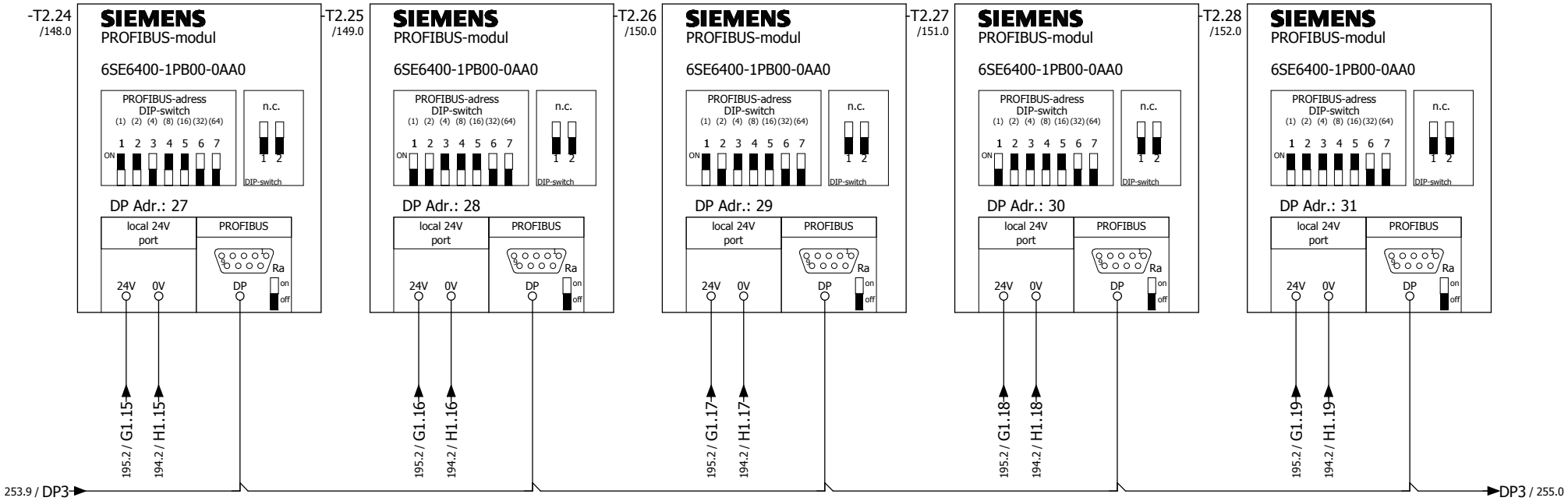

Frequenzwandler
Rollenbahn
Auslauf
M24

frequency converter
roll
conveyor
outlet M24

Frequenzwandler
Rollenbahn
Auslauf
M25

frequency converter
roll
conveyor
outlet M25

Frequenzwandler
Rollenbahn
Auslauf
M26

frequency converter
roll
conveyor
outlet M26

Frequenzwandler
Rollenbahn
Auslauf
M27

frequency converter
roll
conveyor
outlet M27

Frequenzwandler
Rollenbahn
Auslauf
M28

frequency converter
roll
conveyor
outlet M28

Duferco Clabecq

Management codes				Document identification				
5.3.0.0	CE	000	DW	QTPC	L04	ROSL	D	0049
System	Phase	Area	Typology	Project	Lot	Company	D/S	Number

Rev.	Date	Description	Prepared	Checked	Approved			
						Date	30.01.2012	
						Dus		

Duferco (SBM 2) Schaltschrank

in place of | Replaced by

RÖSLER finding a better way ...

Control DP SA4

= ES
+ S

01-130070 00

Page 254
from 565

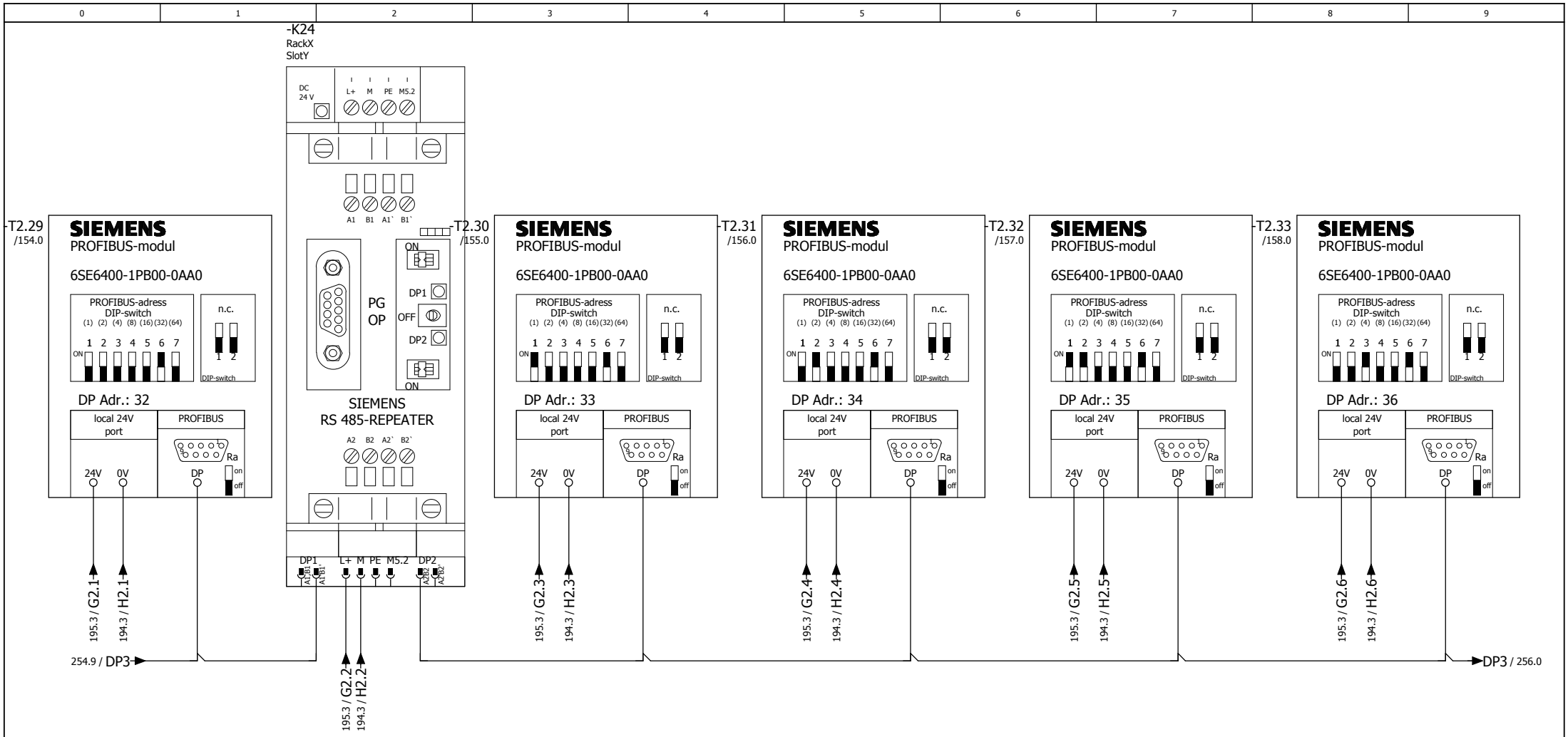

Frequenzwandler
Rollenbahn
Auslauf
M29

frequency converter
roll
conveyor
outlet M29

Frequenzwandler
Rollenbahn
Auslauf
M30

frequency converter
roll
conveyor
outlet M30

Frequenzwandler
Rollenbahn
Auslauf
M31

frequency converter
roll
conveyor
outlet M31

Frequenzwandler
Rollenbahn
Auslauf
M32

frequency converter
roll
conveyor
outlet M32

Frequenzwandler
Rollenbahn
Auslauf
M33

frequency converter
roll
conveyor
outlet M33

Duferco Clabecq

Management codes				Document identification				
5.3.0.0	CE	000	DW	QTPC	L04	ROSL	D	0049
System	Phase	Area	Typology	Project	Lot	Company	D/S	Number

Rev.	Date	Description	Prepared	Checked	Approved			
						Date	30.01.2012	
						Dus		
							Duferco (SBM 2) Schaltschrank	
							in place of	Replaced by

RÖSLER finding a better way ...

Control DP SA4

= ES
+ S

01-130070 00

Page 255
from 565

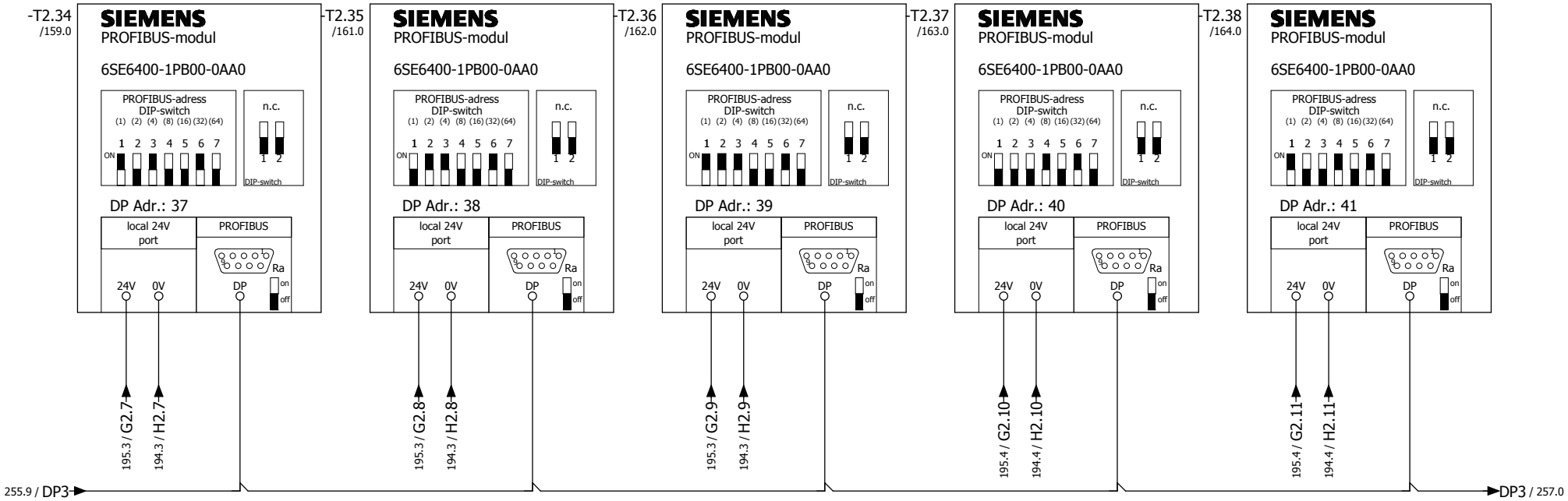

Frequenzwandler
Rollenbahn
Auslauf
M34

frequency converter
roll
conveyor
outlet M34

Frequenzwandler
Rollenbahn
Auslauf
M35

frequency converter
roll
conveyor
outlet M35

Frequenzwandler
Rollenbahn
Auslauf
M36

frequency converter
roll
conveyor
outlet M36

Frequenzwandler
Rollenbahn
Auslauf
M37

frequency converter
roll
conveyor
outlet M37

Frequenzwandler
Rollenbahn
Auslauf
M38

frequency converter
roll
conveyor
outlet M38

Duferco Clabecq

Management codes				Document identification				
5.3.0.0	CE	000	DW	QTPC	L04	ROSL	D	0049
System	Phase	Area	Typology	Project	Lot	Company	D/S	Number

Rev.	Date	Description	Prepared	Checked	Approved			
						Date	30.01.2012	
						Dus		

Duferco (SBM 2) Schaltschrank

in place of | Replaced by

RÖSLER finding a better way ...

Control DP SA4

= ES
+ S

01-130070 00

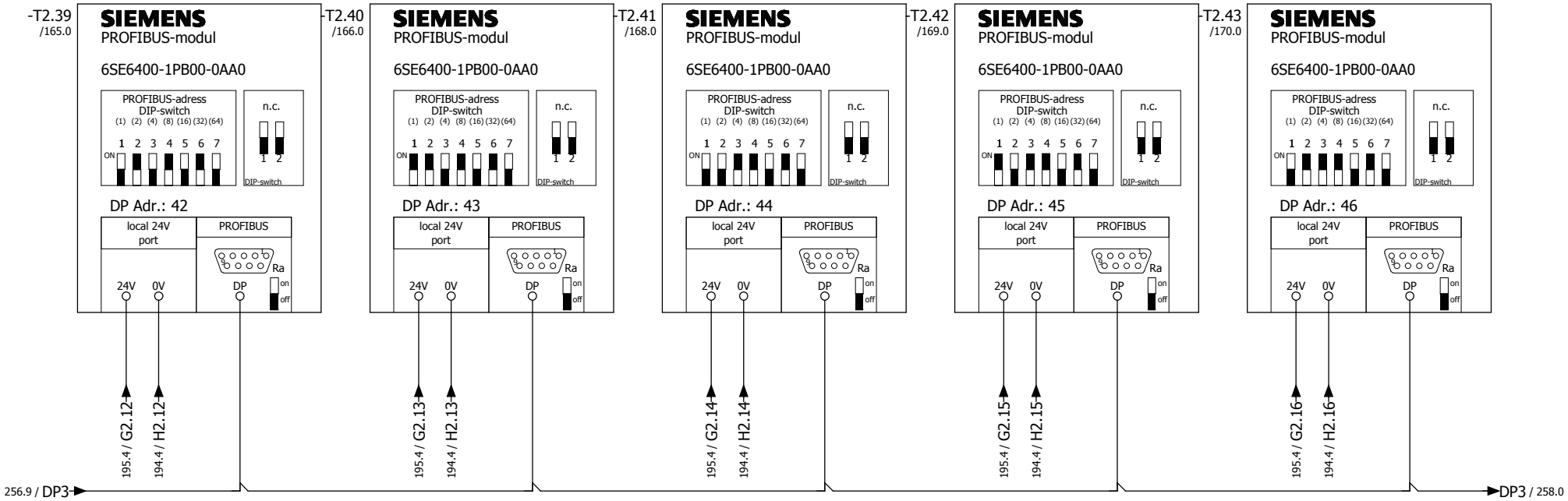

Frequenzwandler
Rollenbahn
Auslauf
M39

frequency converter
roll
conveyor
outlet M39

Frequenzwandler
Rollenbahn
Auslauf
M40

frequency converter
roll
conveyor
outlet M40

Frequenzwandler
Rollenbahn
Auslauf
M41

frequency converter
roll
conveyor
outlet M41

Frequenzwandler
Rollenbahn
Auslauf
M42

frequency converter
roll
conveyor
outlet M42

Frequenzwandler
Rollenbahn
Auslauf
M43

frequency converter
roll
conveyor
outlet M43

Duferco Clabecq

Management codes				Document identification				
5.3.0.0	CE	000	DW	QTPC	L04	ROSL	D	0049
System	Phase	Area	Typology	Project	Lot	Company	D/S	Number

Rev.	Date	Description	Prepared	Checked	Approved			
						Date	30.01.2012	
						Dus		

Duferco (SBM 2) Schaltschrank

in place of | Replaced by

RÖSLER finding a better way ...

Control DP SA4

= ES
+ S

01-130070 00

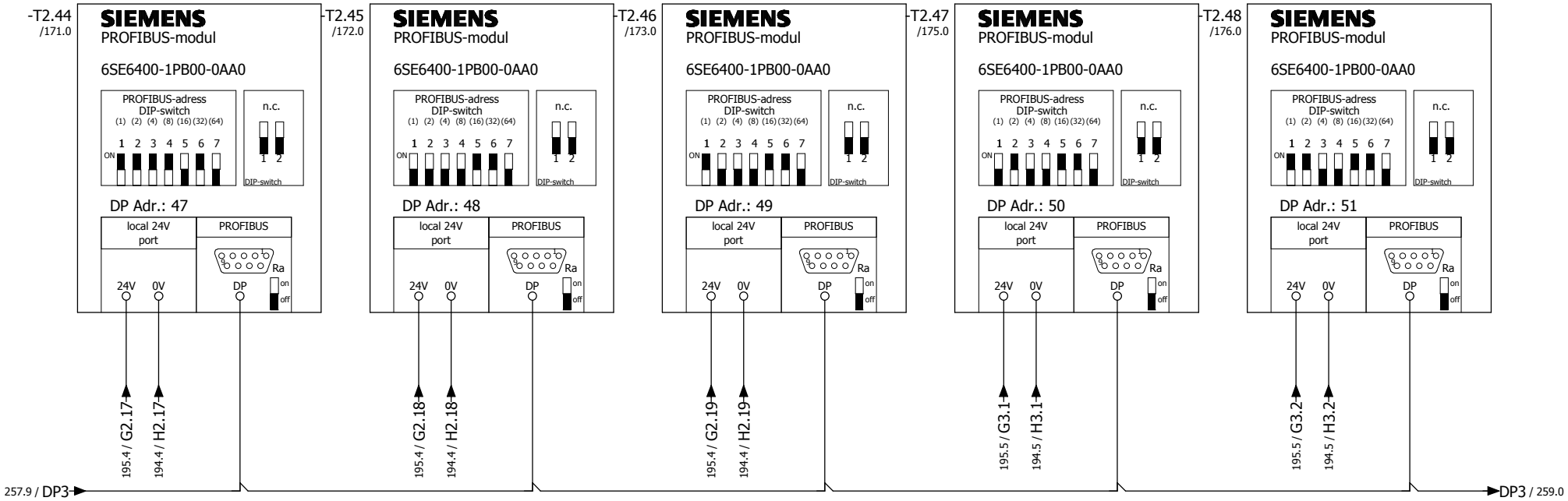

Frequenzwandler Rollenbahn Auslauf M44	Frequenzwandler Rollenbahn Auslauf M45	Frequenzwandler Rollenbahn Auslauf M46	Frequenzwandler Rollenbahn Auslauf M47	Frequenzwandler Rollenbahn Auslauf M48
frequency converter roll conveyor outlet M44	frequency converter roll conveyor outlet M45	frequency converter roll conveyor outlet M46	frequency converter roll conveyor outlet M47	frequency converter roll conveyor outlet M48

Duferco Clabecq

Management codes				Document identification				
5.3.0.0	CE	000	DW	QTPC	L04	ROSL	D	0049
System	Phase	Area	Typology	Project	Lot	Company	D/S	Number

Rev.	Date	Description	Prepared	Checked	Approved			
						Date	30.01.2012	
						Dus		
							Duferco (SBM 2) Schaltschrank	
							in place of	Replaced by

RÖSLER finding a better way ...

Control DP SA4

= ES
+ S

01-130070 00

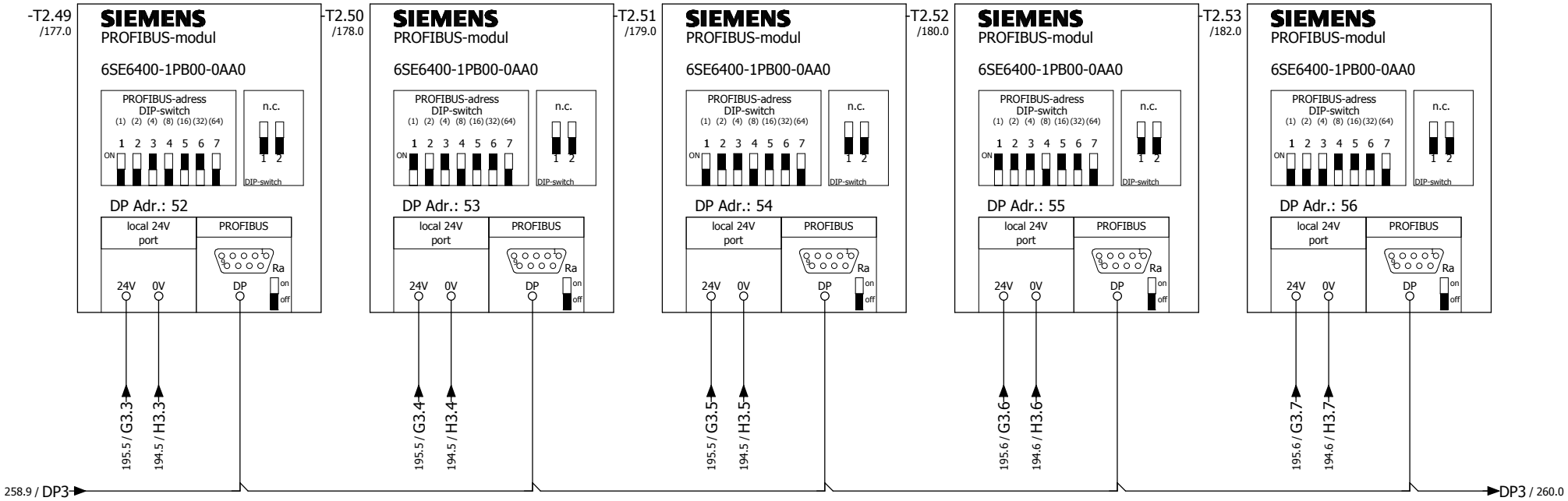

Frequenzwandler
Rollenbahn
Auslauf
M49

frequency converter
roll
conveyor
outlet M49

Frequenzwandler
Rollenbahn
Auslauf
M50

frequency converter
roll
conveyor
outlet M50

Frequenzwandler
Rollenbahn
Auslauf
M51

frequency converter
roll
conveyor
outlet M51

Frequenzwandler
Rollenbahn
Auslauf
M52

frequency converter
roll
conveyor
outlet M52

Frequenzwandler
Rollenbahn
Auslauf
M53

frequency converter
roll
conveyor
outlet M53

Duferco Clabecq

Management codes				Document identification				
5.3.0.0	CE	000	DW	QTPC	L04	ROSL	D	0049
System	Phase	Area	Typology	Project	Lot	Company	D/S	Number

Rev.	Date	Description	Prepared	Checked	Approved			
						Date	30.01.2012	
						Dus		

Duferco (SBM 2) Schaltschrank

in place of | Replaced by

RÖSLER finding a better way ...

Control DP SA4

= ES
+ S

01-130070 00

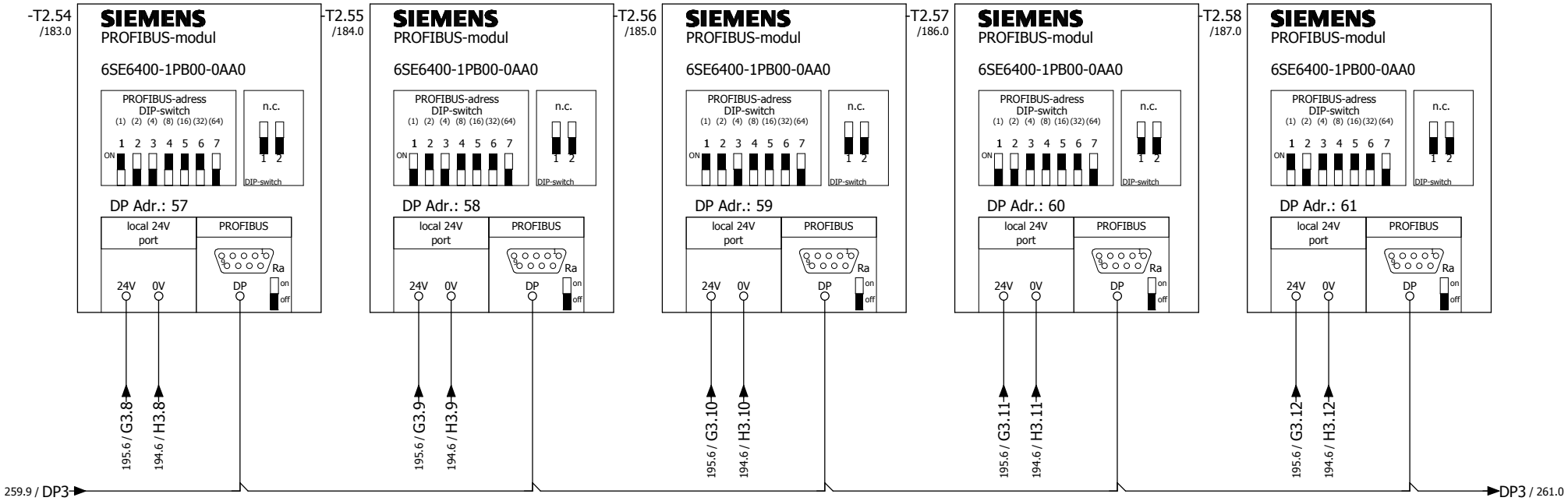

Frequenzwandler
Rollenbahn
Auslauf
M54

frequency converter
roll
conveyor
outlet M54

Frequenzwandler
Rollenbahn
Auslauf
M55

frequency converter
roll
conveyor
outlet M55

Frequenzwandler
Rollenbahn
Auslauf
M56

frequency converter
roll
conveyor
outlet M56

Frequenzwandler
Rollenbahn
Auslauf
M57

frequency converter
roll
conveyor
outlet M57

Frequenzwandler
Rollenbahn
Auslauf
M58

frequency converter
roll
conveyor
outlet M58

Duferco Clabecq

Management codes				Document identification				
5.3.0.0	CE	000	DW	QTPC	L04	ROSL	D	0049
System	Phase	Area	Typology	Project	Lot	Company	D/S	Number

Rev.	Date	Description	Prepared	Checked	Approved			
						Date	30.01.2012	
						Dus		

Duferco (SBM 2) Schaltschrank

in place of | Replaced by

RÖSLER finding a better way ...

Control DP SA4

= ES
+ S

01-130070 00

Page 260
from 565

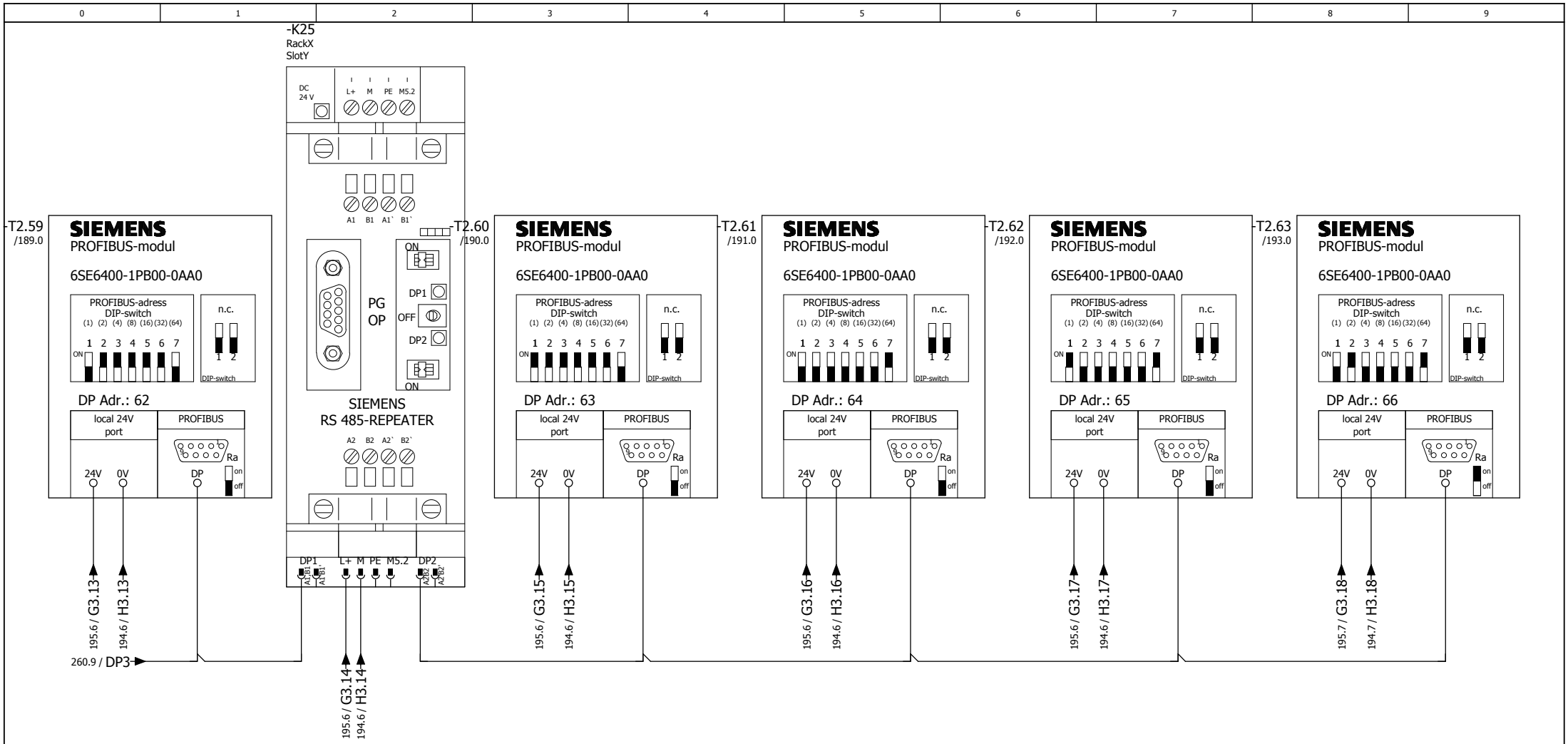

Frequenzwandler
Rollenbahn
Auslauf
M59

frequency converter
roll
conveyor
outlet M59

Frequenzwandler
Rollenbahn
Auslauf
M60

frequency converter
roll
conveyor
outlet M60

Frequenzwandler
Rollenbahn
Auslauf
M61

frequency converter
roll
conveyor
outlet M61

Frequenzwandler
Rollenbahn
Auslauf
M62

frequency converter
roll
conveyor
outlet M62

Frequenzwandler
Rollenbahn
Auslauf
M63

frequency converter
roll
conveyor
outlet M63

Duferco Clabecq

Management codes				Document identification				
5.3.0.0	CE	000	DW	QTPC	L04	ROSL	D	0049
System	Phase	Area	Typology	Project	Lot	Company	D/S	Number

Rev.	Date	Description	Prepared	Checked	Approved			
						Date	30.01.2012	
						Dus		
							Duferco (SBM 2) Schaltschrank	
							in place of	Replaced by

RÖSLER finding a better way ...

Control DP SA4

= ES
+ S

01-130070 00

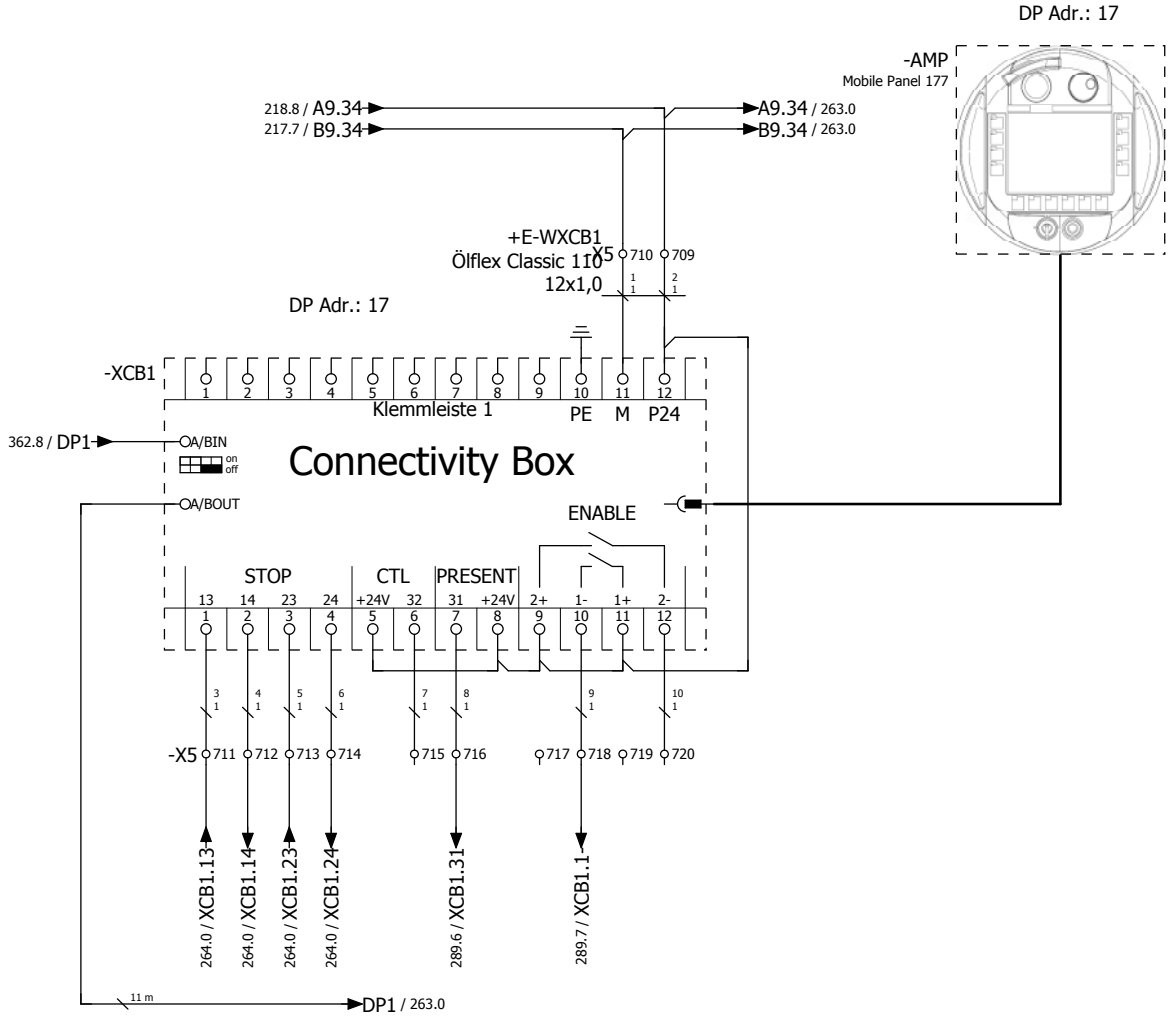

Anschlussbox
für Mobile Panel

connection box
for Mobile Panel

Duferco Clabecq

Management codes				Document identification				
5.3.0.0	CE	000	DW	QTPC	L04	ROSL	D	0049
System	Phase	Area	Typology	Project	Lot	Company	D/S	Number

Rev.	Date	Description	Prepared	Checked	Approved			
						Date	30.01.2012	
						Dus		
							Duferco (SBM 2) Schaltschrank	
							in place of	Replaced by

RÖSLER finding a better way ...

Control Mobile Panel 177

= ES
+ S

01-130070 00

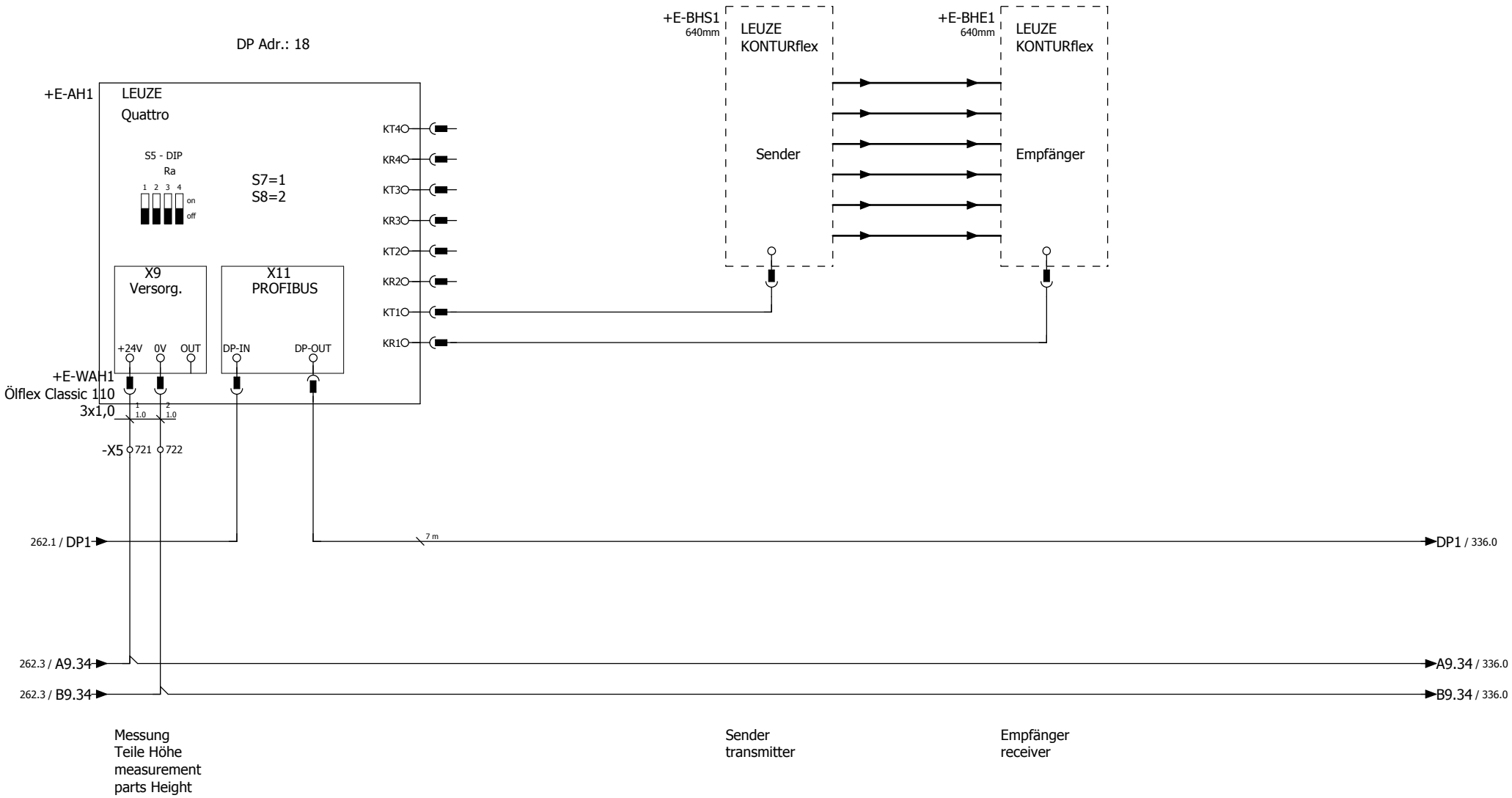

Duferco Clabecq

Management codes				Document identification				
5.3.0.0	CE	000	DW	QTPC	L04	ROSL	D	0049
System	Phase	Area	Typology	Project	Lot	Company	D/S	Number

Rev.	Date	Description	Prepared	Checked	Approved			
						Date	30.01.2012	
						Dus		
							Duferco (SBM 2) Schaltschrank	
							in place of	Replaced by

RÖSLER finding a better way ...

Control DP
measurement parts Height

= ES
+ S

01-130070 00

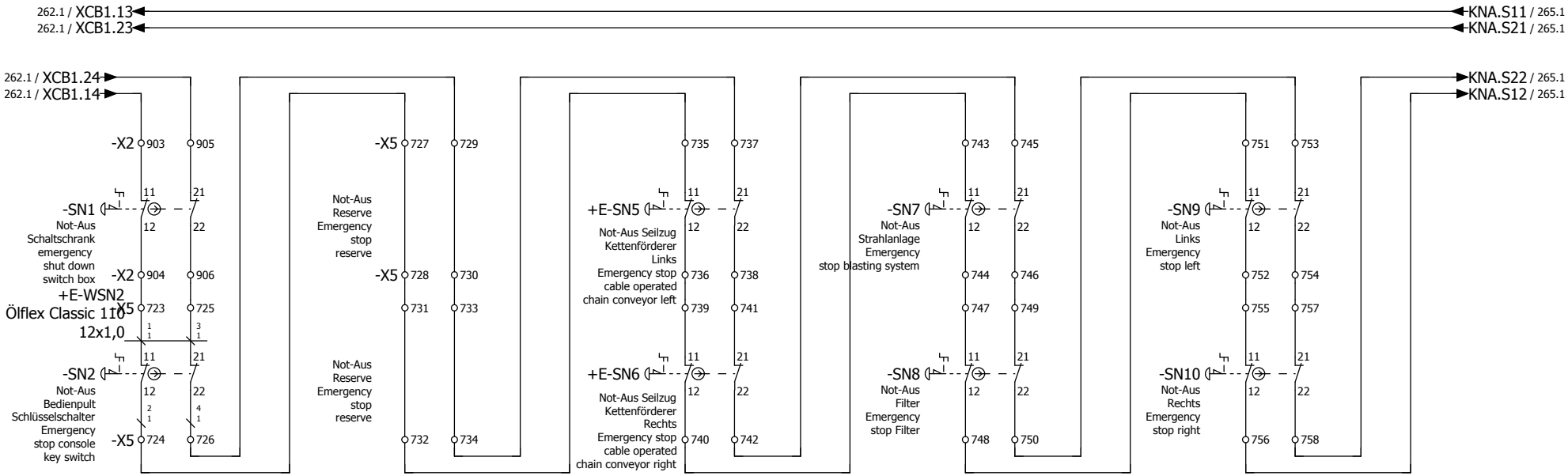

Duferco Clabecq

Management codes				Document identification				
5.3.0.0	CE	000	DW	QTPC	L04	ROSL	D	0049
System	Phase	Area	Typology	Project	Lot	Company	D/S	Number

Rev.	Date	Description	Prepared	Checked	Approved			
						Date	30.01.2012	
						Dus		

Duferco (SBM 2) Schaltschrank

in place of | Replaced by

RÖSLER finding a better way ...

control
emergency shut down

= ES
+ S

01-130070 00

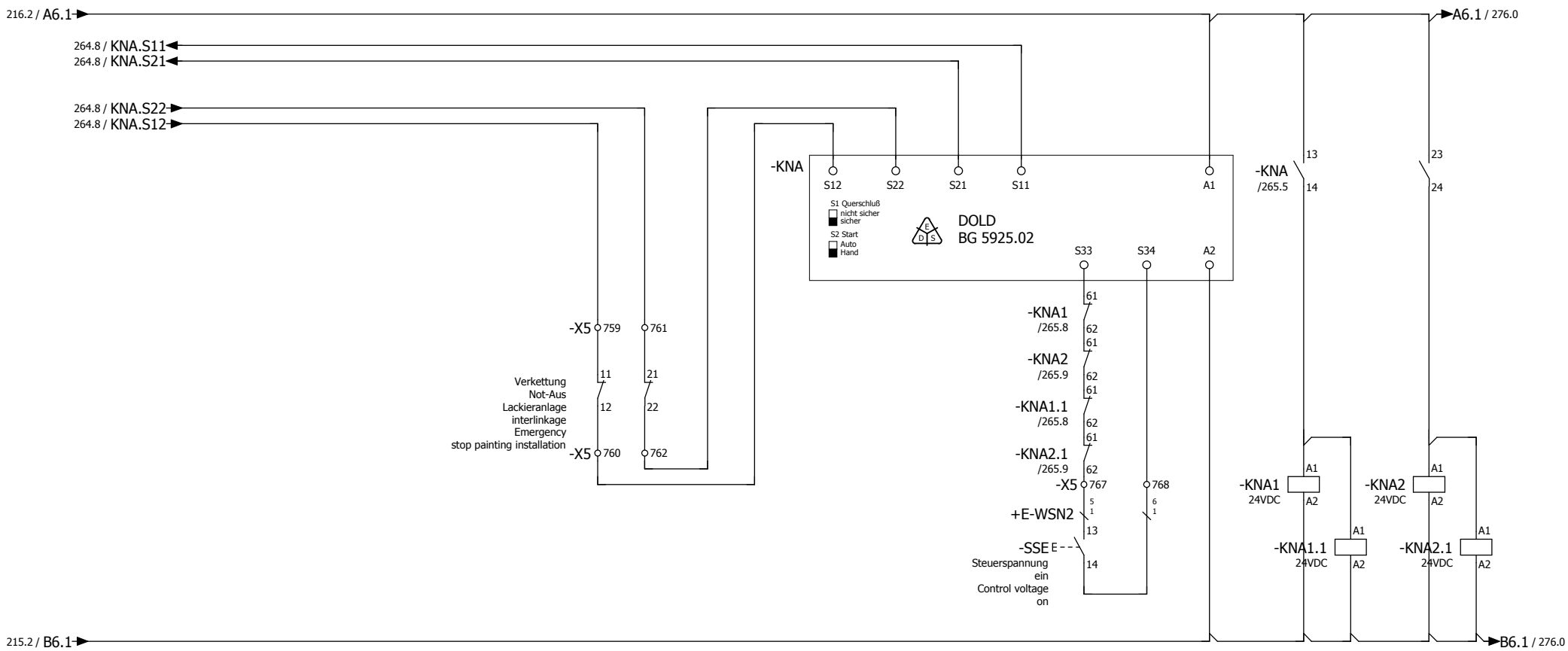

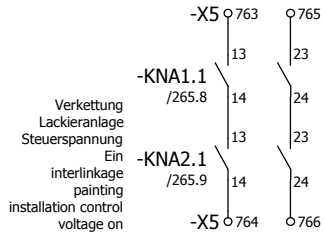

NOT-AUS

Emergency stop

13 — 14 /265.8
23 — 24 /265.9

13 — 14 /216.0
23 — 24 /216.3
33 — 34 /216.5
43 — 44 /216.6
53 — 54 /210.3
61 — 62 /265.6
71 — 72
83 — 84 /218.1

13 — 14 /265.4
23 — 24 /265.4
33 — 34 /211.6
43 — 44 /266.2
53 — 54 /266.8
61 — 62 /265.6
71 — 72
83 — 84

13 — 14 /216.0
23 — 24 /216.3
33 — 34 /216.5
43 — 44 /216.6
53 — 54 /210.3
61 — 62 /265.6
71 — 72
83 — 84 /218.1

13 — 14 /265.4
23 — 24 /265.4
33 — 34 /211.6
43 — 44
53 — 54
61 — 62 /265.6
71 — 72
83 — 84

Duferco Clabecq

Management codes				Document identification				
5.3.0.0	CE	000	DW	QTPC	L04	ROSL	D	0049
System	Phase	Area	Typology	Project	Lot	Company	D/S	Number

Rev.	Date	Description	Prepared	Checked	Approved			
						Date	30.01.2012	
						Dus		

Duferco (SBM 2) Schaltschrank

in place of | Replaced by

RÖSLER finding a better way ...

control
emergency shut down

= ES
+ S

01-130070 00

Page 265
from 565

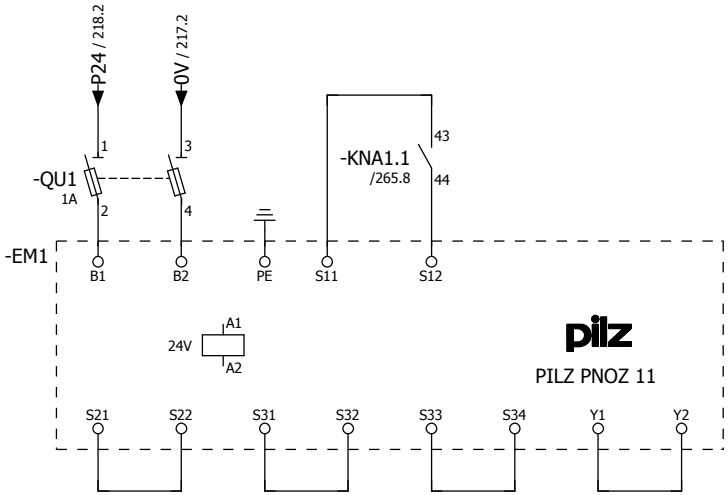

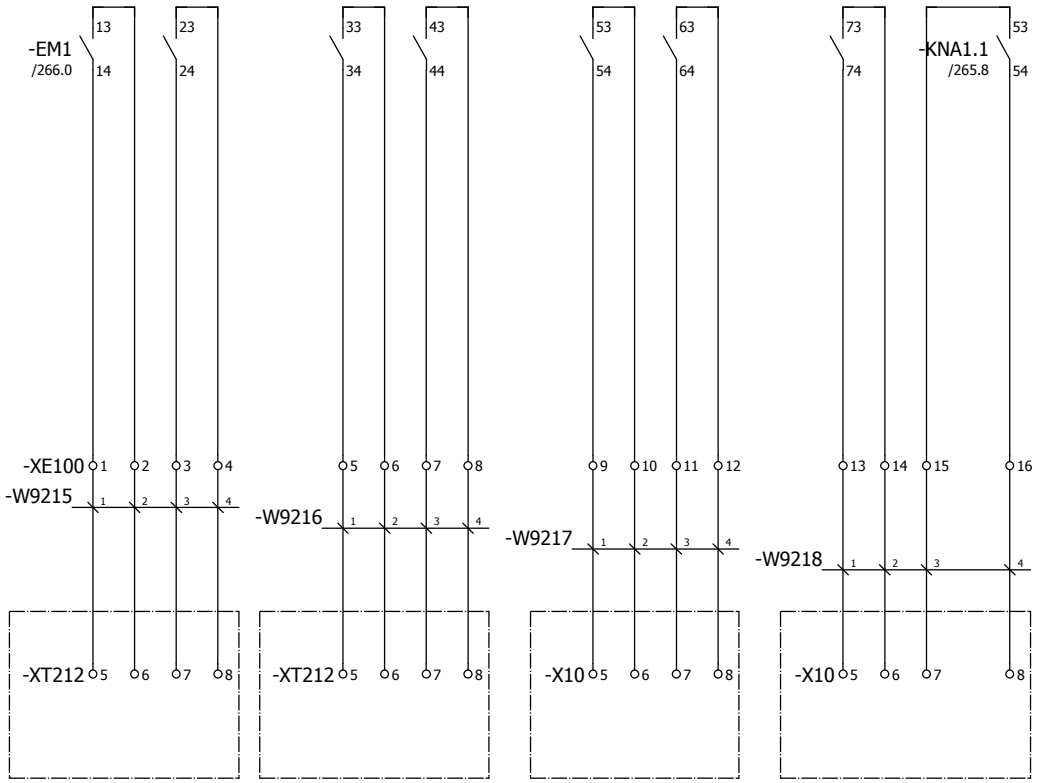

NOT-AUS

Emergency stop

PILZ.787 750
13 — 14 /266.4
23 — 24 /266.5
33 — 34 /266.5
43 — 44 /266.6
53 — 54 /266.6
63 — 64 /266.7
73 — 74 /266.8

Duferco Clabecq

Management codes				Document identification				
5.3.0.0	CE	000	DW	QTPC	L04	ROSL	D	0049
System	Phase	Area	Typology	Project	Lot	Company	D/S	Number

Rev.	Date	Description	Prepared	Checked	Approved			
						Date	30.01.2012	
						Dus		
							Duferco (SBM 2) Schaltschrank	
							in place of	Replaced by

RÖSLER finding a better way ...

Control
Emergency stop Duferco

= ES
+ S

01-130070 00

Page 266
from 565

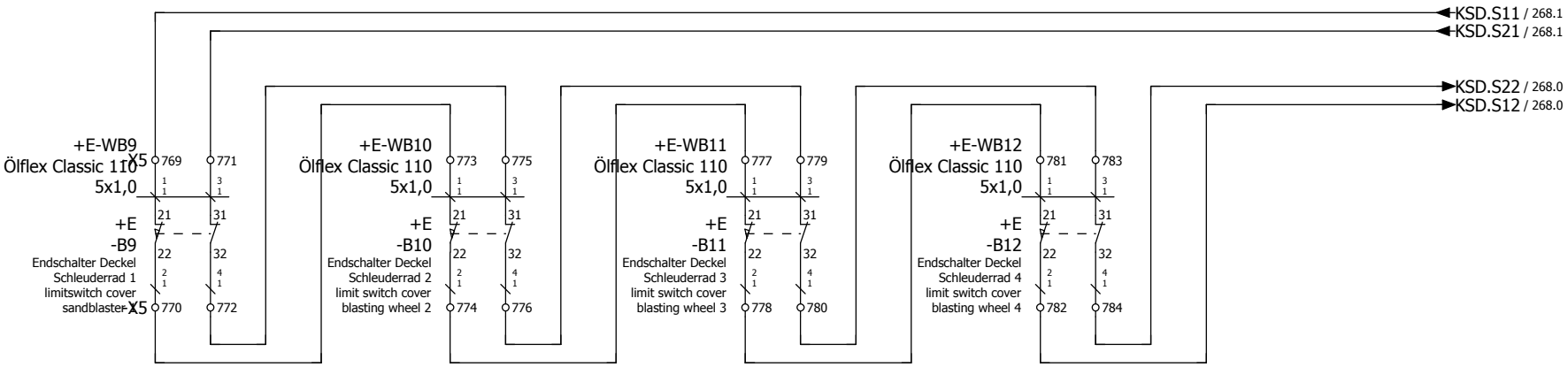

Duferco Clabecq

Management codes				Document identification				
5.3.0.0	CE	000	DW	QTPC	L04	ROSL	D	0049
System	Phase	Area	Typology	Project	Lot	Company	D/S	Number

266 268

Rev.	Date	Description	Prepared	Checked	Approved			
						Date	30.01.2012	
						Dus		
							Duferco (SBM 2) Schaltschrank	
							in place of	Replaced by

RÖSLER finding a better way ...

Control monitoring blasting wheel cover

= ES
+ S

01-130070 00

Page 267
from 565

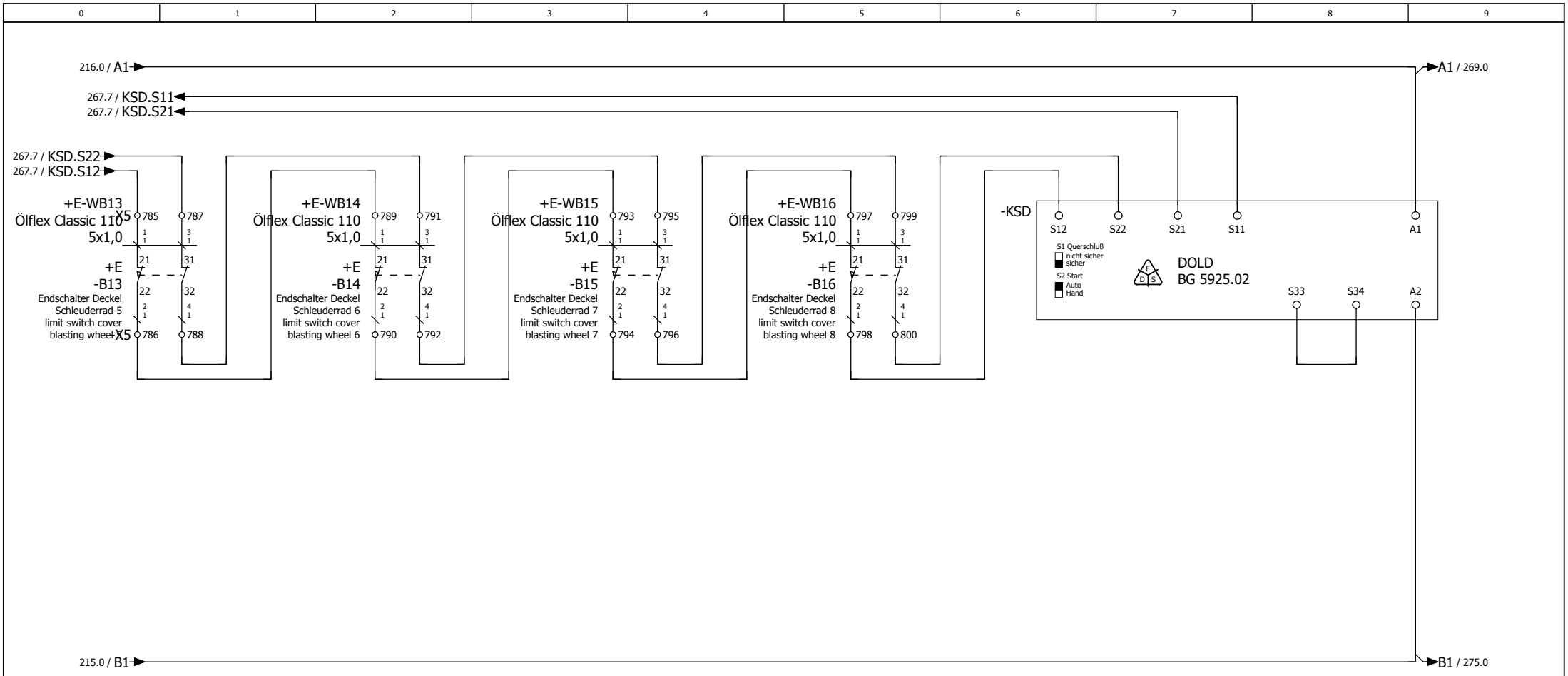

Überwachung
Schleuderrad Deckel

monitoring
blasting wheel cover

13 — 14 /273.3
23 — 24 /289.5

Duferco Clabecq

Management codes				Document identification				
5.3.0.0	CE	000	DW	QTPC	L04	ROSL	D	0049
System	Phase	Area	Typology	Project	Lot	Company	D/S	Number

Rev.	Date	Description	Prepared	Checked	Approved			
						Date	30.01.2012	
						Dus		
							Duferco (SBM 2) Schaltschrank	
							in place of	Replaced by

RÖSLER finding a better way ...

Control
monitoring
blasting wheel cover

= ES
+ S

01-130070 00

Page 268
from 565

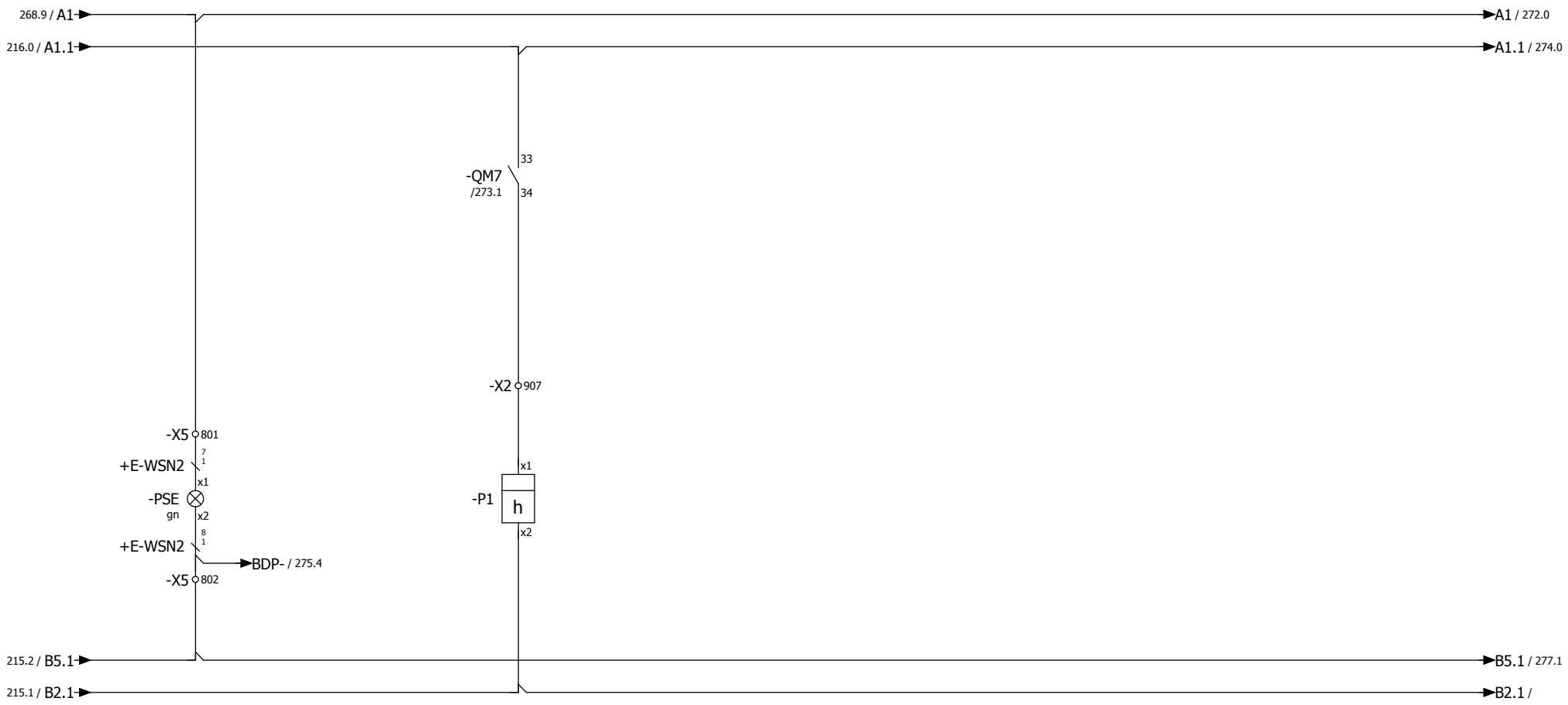

Steuerspannung
Ein

control voltage
on

Betriebsstundenzähler

Operating hours counter

Duferco Clabecq

Management codes				Document identification				
5.3.0.0	CE	000	DW	QTPC	L04	ROSL	D	0049
System	Phase	Area	Typology	Project	Lot	Company	D/S	Number

Rev.	Date	Description	Prepared	Checked	Approved			
						Date	30.01.2012	
						Dus		
							Duferco (SBM 2) Schaltschrank	
							in place of	Replaced by

RÖSLER finding a better way ...

control
operating hours counter

= ES
+ S

01-130070 00

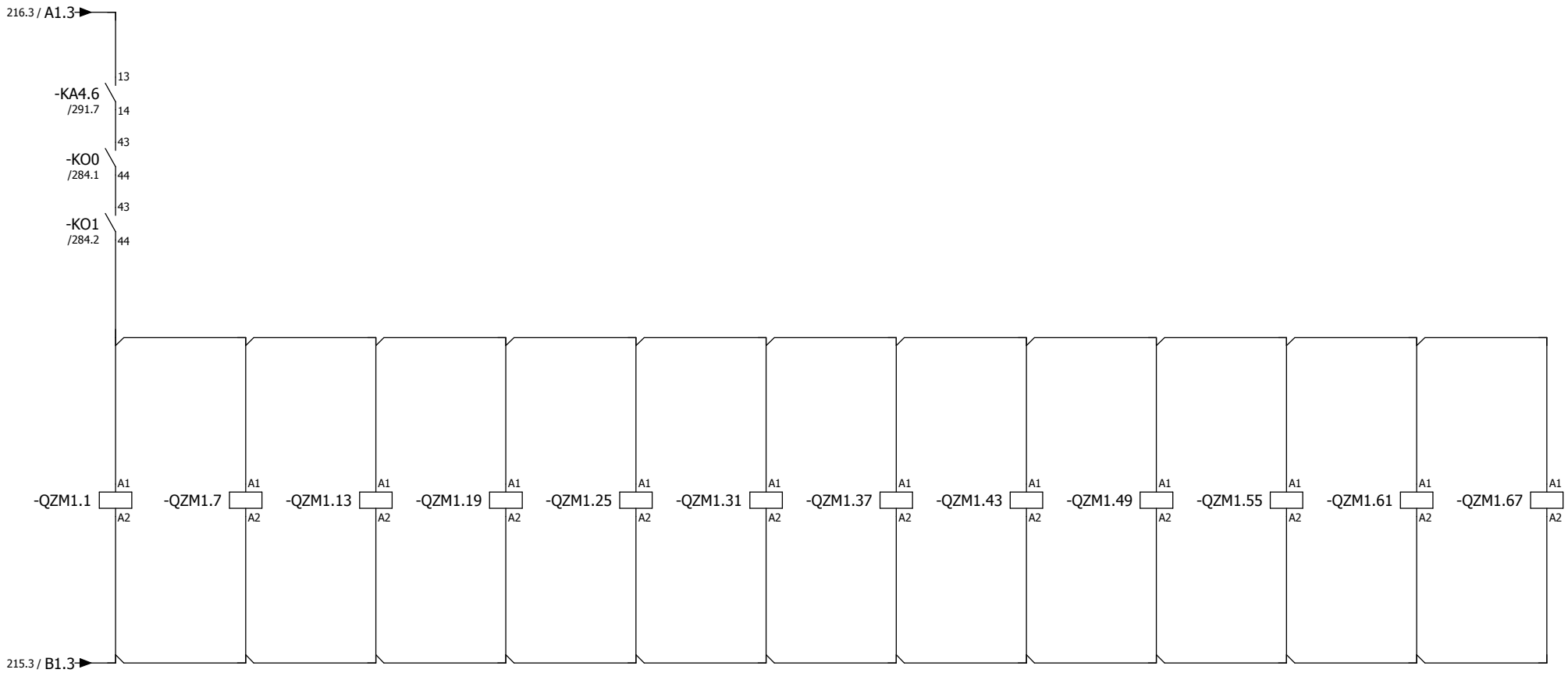

Zuleitung
Frequenzwandler
Rollenbahn

input lead
frequency converter
roll conveyor

1 2 /2.1	1 2 /9.1	1 2 /16.1	1 2 /23.1	1 2 /30.1	1 2 /37.1	1 2 /44.1	1 2 /51.1	1 2 /58.1	1 2 /67.1	1 2 /74.1	1 2 /81.1
3 4 /2.1	3 4 /9.1	3 4 /16.1	3 4 /23.1	3 4 /30.1	3 4 /37.1	3 4 /44.1	3 4 /51.1	3 4 /58.1	3 4 /67.1	3 4 /74.1	3 4 /81.1
5 6 /2.1	5 6 /9.1	5 6 /16.1	5 6 /23.1	5 6 /30.1	5 6 /37.1	5 6 /44.1	5 6 /51.1	5 6 /58.1	5 6 /67.1	5 6 /74.1	5 6 /81.1

Duferco Clabecq

Management codes				Document identification				
5.3.0.0	CE	000	DW	QTPC	L04	ROSL	D	0049
System	Phase	Area	Typology	Project	Lot	Company	D/S	Number

Rev.	Date	Description	Prepared	Checked	Approved	Date 30.01.2012	Duferco (SBM 2) Schaltschrank	
						Dus		
							in place of	Replaced by

RÖSLER finding a better way ...

Control
input lead frequency converter roll conveyor

= ES
+ S

01-130070 00

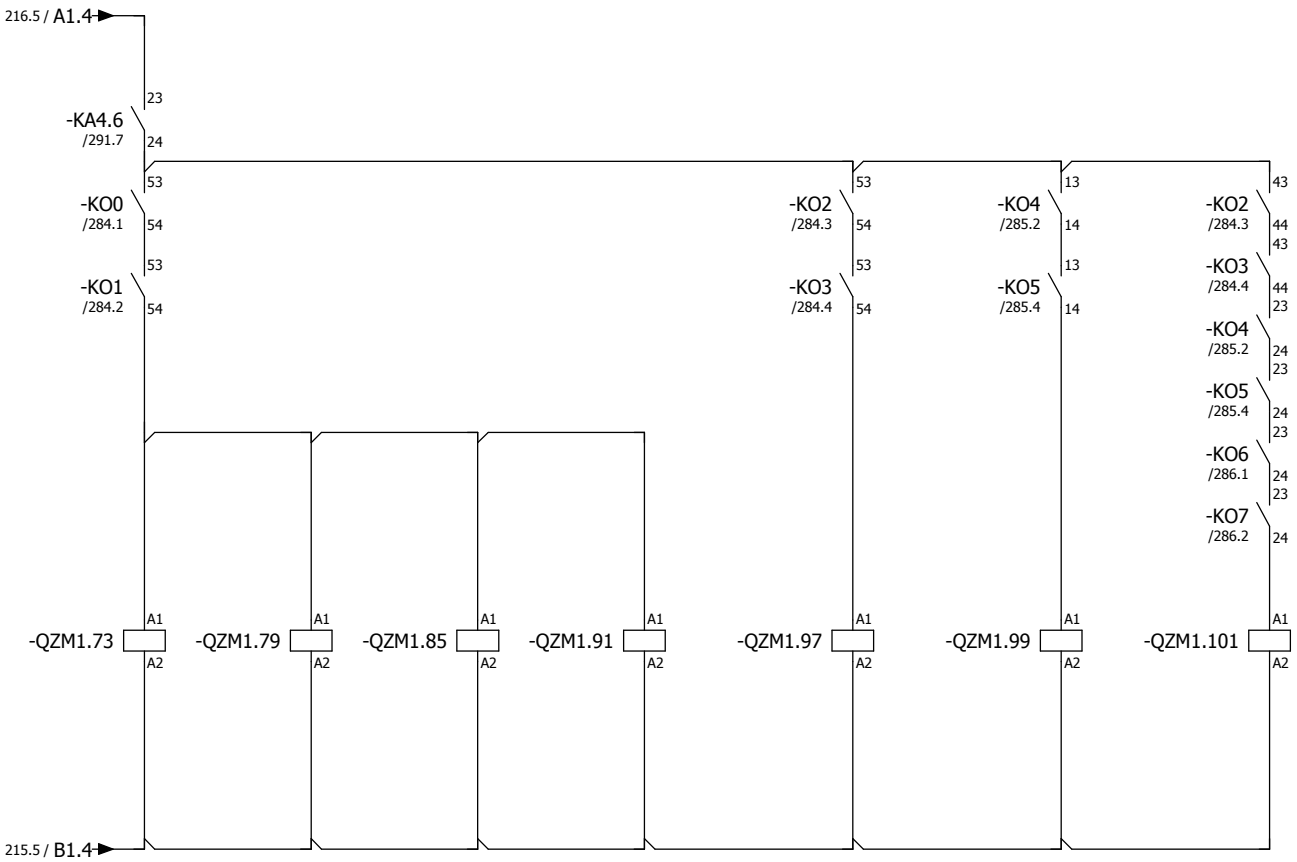

Zuleitung Frequenzwandler Rollenbahn Einlauf input lead frequency converter roll conveyor inlet				Zuleitung Frequenzwandler Rollenbahn Strahlanlage input lead frequency converter roll conveyor blasting system	Zuleitung Frequenzwandler Zwischenrollgang Lackieranlage input lead frequency converter roll conveyor inside painting installation	Zuleitung Frequenzwandler Kettenförderer input lead frequency converter chain conveyor
1 2 /88.1	1 2 /95.1	1 2 /102.1	1 2 /109.1	1 2 /109.6	1 2 /109.7	1 2 /116.1
3 4 /88.1	3 4 /95.1	3 4 /102.1	3 4 /109.1	3 4 /109.6	3 4 /109.8	3 4 /116.1
5 6 /88.1	5 6 /95.1	5 6 /102.1	5 6 /109.1	5 6 /109.6	5 6 /109.8	5 6 /116.1

Duferco Clabecq

Management codes				Document identification				
5.3.0.0	CE	000	DW	QTPC	L04	ROSL	D	0049
System	Phase	Area	Typology	Project	Lot	Company	D/S	Number

Rev.	Date	Description	Prepared	Checked	Approved			
						Date	30.01.2012	
						Dus		
							Duferco (SBM 2) Schaltschrank	
							in place of	Replaced by

RÖSLER finding a better way ...

Control
input lead frequency converter roll conveyor

= ES
+ S

01-130070 00

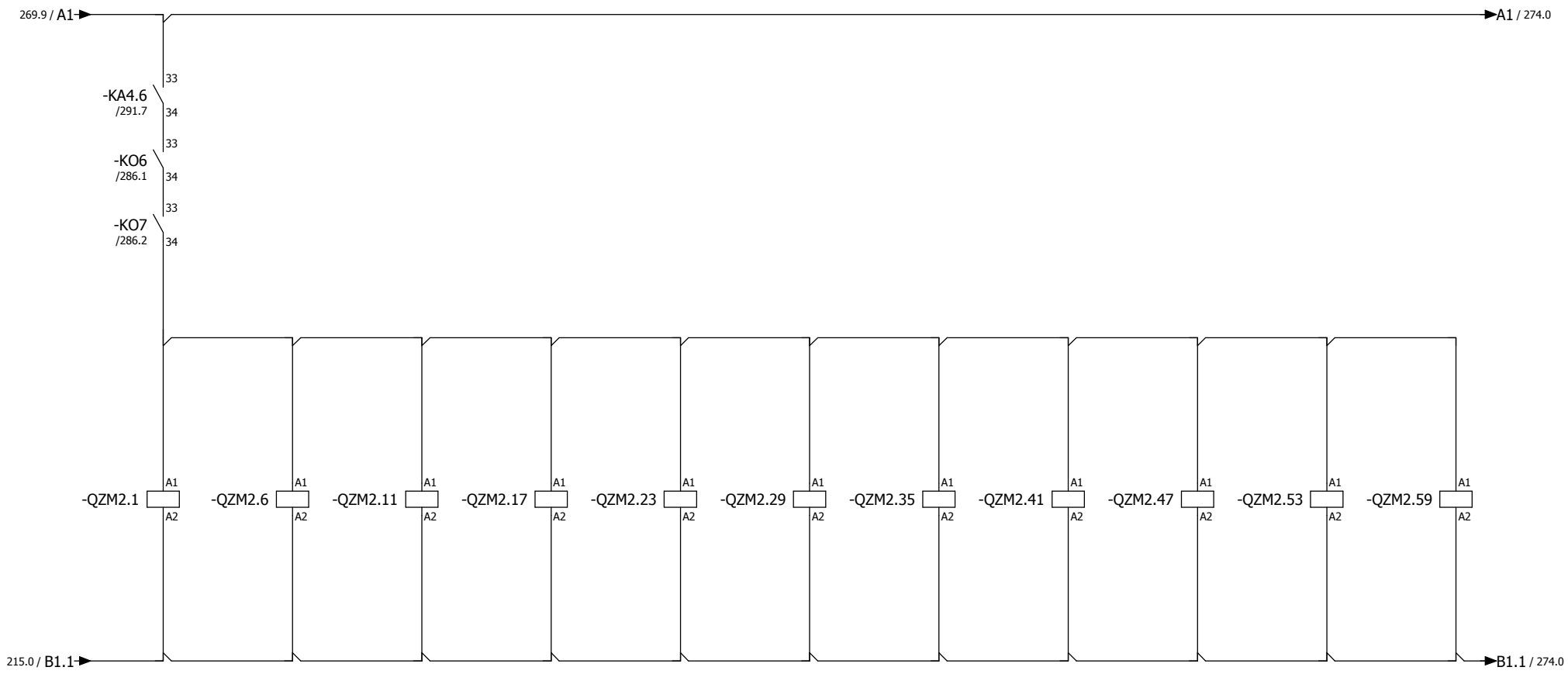

Zuleitung
Frequenzwandler
Rollenbahn
Auslauf

input lead
frequency converter
roll
conveyor outlet

1 2 /116.3
3 4 /116.4
5 6 /116.4

1 2 /124.1
3 4 /124.1
5 6 /124.1

1 2 /132.1
3 4 /132.1
5 6 /132.1

1 2 /139.1
3 4 /139.1
5 6 /139.1

1 2 /146.1
3 4 /146.1
5 6 /146.1

1 2 /153.1
3 4 /153.1
5 6 /153.1

1 2 /160.1
3 4 /160.1
5 6 /160.1

1 2 /167.1
3 4 /167.1
5 6 /167.1

1 2 /174.1
3 4 /174.1
5 6 /174.1

1 2 /181.1
3 4 /181.1
5 6 /181.1

1 2 /188.1
3 4 /188.1
5 6 /188.1

Duferco Clabecq

Management codes				Document identification				
5.3.0.0	CE	000	DW	QTPC	L04	ROSL	D	0049
System	Phase	Area	Typology	Project	Lot	Company	D/S	Number

Rev.	Date	Description	Prepared	Checked	Approved			
						Date	30.01.2012	
						Dus		

Duferco (SBM 2) Schaltschrank
in place of | Replaced by

RÖSLER finding a better way ...

Control
input lead frequency converter roll conveyor

= ES
+ S

01-130070 00

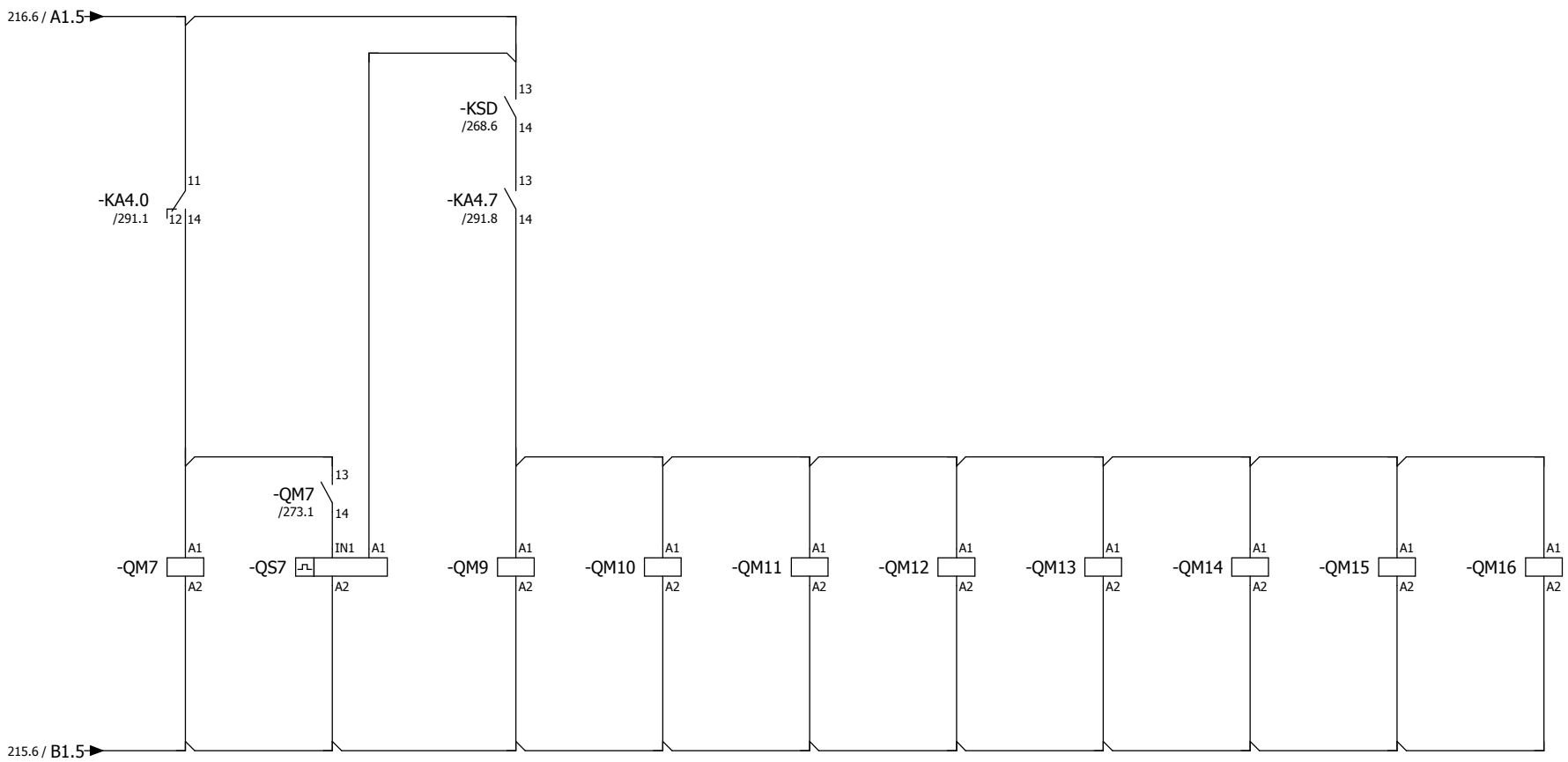

Filter	Schleuderrad 1	Schleuderrad 2	Schleuderrad 3	Schleuderrad 4	Schleuderrad 5	Schleuderrad 6	Schleuderrad 7	Schleuderrad 8
Filter	blasting wheel 1	blasting wheel 2	blasting wheel 3	blasting wheel 4	blasting wheel 5	blasting wheel 6	blasting wheel 7	blasting wheel 8

1 2 /198.1
3 4 /198.1
5 6 /198.1
13 14 /273.2
21 22
33 34 /269.3
43 44

L1 T1 /198.1
L3 T3 /198.1
13 14
23 24
L2 T2 /198.1

1 2 /200.1
3 4 /200.1
5 6 /200.1

1 2 /201.1
3 4 /201.1
5 6 /201.1

1 2 /202.1
3 4 /202.1
5 6 /202.1

1 2 /203.1
3 4 /203.1
5 6 /203.1

1 2 /204.1
3 4 /204.1
5 6 /204.1

1 2 /205.1
3 4 /205.1
5 6 /205.1

1 2 /206.1
3 4 /206.1
5 6 /206.1

1 2 /207.1
3 4 /207.1
5 6 /207.1

Duferco Clabecq

Management codes				Document identification				
5.3.0.0	CE	000	DW	QTPC	L04	ROSL	D	0049
System	Phase	Area	Typology	Project	Lot	Company	D/S	Number

Rev.	Date	Description	Prepared	Checked	Approved			
						Date	30.01.2012	
						Dus		
							in place of	Replaced by

Duferco (SBM 2) Schaltschrank

RÖSLER finding a better way ...

Control
input lead frequency converter
blast wheels

= ES
+ S

01-130070 00

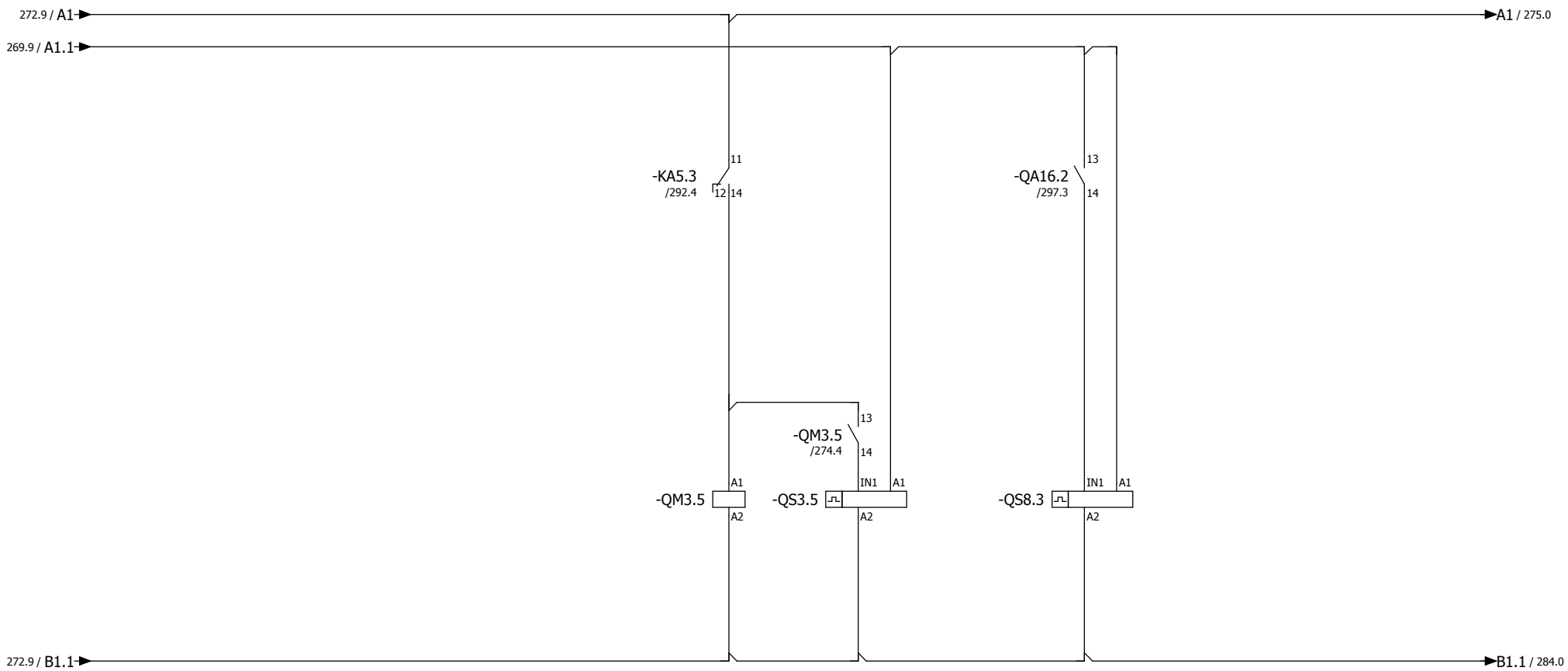

Becherwerk

bucket plant

1 — 2 /196.6
3 — 4 /196.6
5 — 6 /196.6
13 — 14 /274.5
21 — 22
33 — 34 /196.8
43 — 44 /196.8

L1 — T1 /196.6
L3 — T3 /196.6
13 — 14
23 — 24
L2 — T2 /196.6

Bürste +
Förderschnecke

brush +
screw conveyor

L1 — T1 /199.4
L3 — T3 /199.5
13 — 14
23 — 24
L2 — T2 /199.4

Duferco Clabecq

Management codes				Document identification				
5.3.0.0	CE	000	DW	QTPC	L04	ROSL	D	0049
System	Phase	Area	Typology	Project	Lot	Company	D/S	Number

Rev.	Date	Description	Prepared	Checked	Approved			
						Date	30.01.2012	
						Dus		

Duferco (SBM 2) Schaltschrank

in place of | Replaced by

RÖSLER finding a better way ...

Control
Filter bucket plant

= ES
+ S

01-130070 00

Page 274
from 565

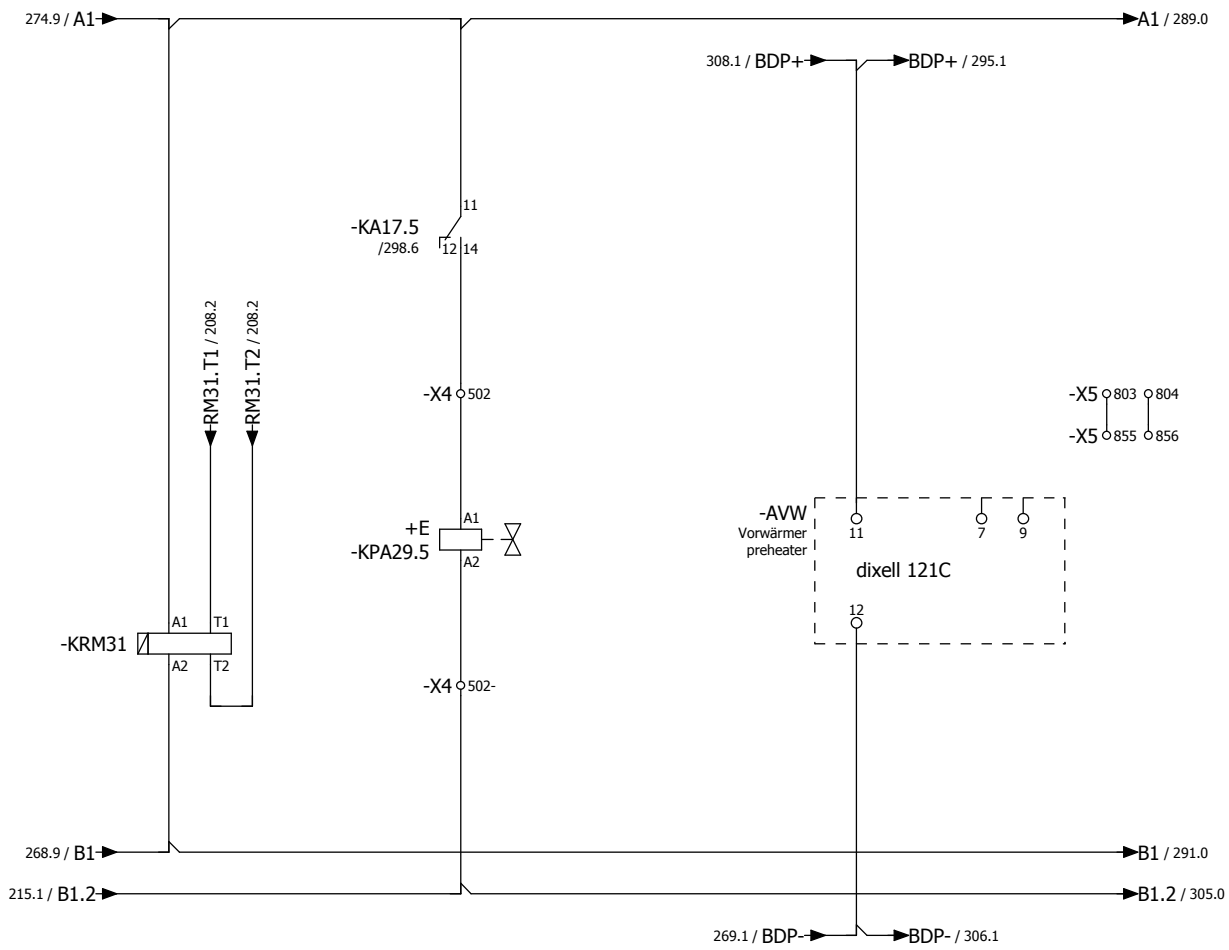

Parametereinstellungen parameter settings		
Set1	200°C	Sollwert 1 setpoint 1
Set2	0°C	Sollwert 2 setpoint 2
Hy1	-5°C	Hysterese 1 hysteresis 1
Hy2	+5°C	Hysterese 2 hysteresis 2
LS1	100°C	min. Sollwert 1 min. setpoint 1
LS2	0°C	min. Sollwert 2 min. setpoint 2
US1	220°C	max. Sollwert 1 max. setpoint 1
US2	0°C	max. Sollwert 2 max. setpoint 2
S1C	in	Wirkung Relais 1 operation relay 1
S2C	dir	Wirkung Relais 2 operation relay 2
ALL	400°C	tief Alarm low alarm
ALU	15°C	hoch Alarm high alarm
ALH	5°C	Alarm Hysterese alarm hysteresis
ALd	0min	Alarm Verzögerungszeit In Betrieb alarm delay time in operation
dAO	0min	Alarm Verzögerungszeit nach Inbetriebnahme alarm delay time to starting up
AS	CL	Polarität Alarm Relais polarity alarm relay
OPb	-10	Kalibrierung Analogeingang calibration analog input
UdM	°C	Maßeinheit measuring unit
Pbc	Pt	Fühler Typ feeler Type
P3F	no	3 Leiter Fühler 3 conductor feeler
ouc	dip	Relais 1 - Relais 2 relay 1 - relay 2

Kaltleiter
Ventilator
Vorwärmer

thermistor
ventilator
preheater

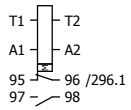

Hauptventil
Gas

main valve
gas

Thermostat
Vorwärmer

thermostat
preheater

274

Duferco Clabecq

Management codes				Document identification				
5.3.0.0	CE	000	DW	QTPC	L04	ROSL	D	0049
System	Phase	Area	Typology	Project	Lot	Company	D/S	Number

276

						Date	30.01.2012	
						Dus		
Rev.	Date	Description	Prepared	Checked	Approved			

Duferco (SBM 2) Schaltschrank

in place of | Replaced by

RÖSLER finding a better way ...

Control preheater

= ES
+ S

01-130070 00

Page 275
from 565

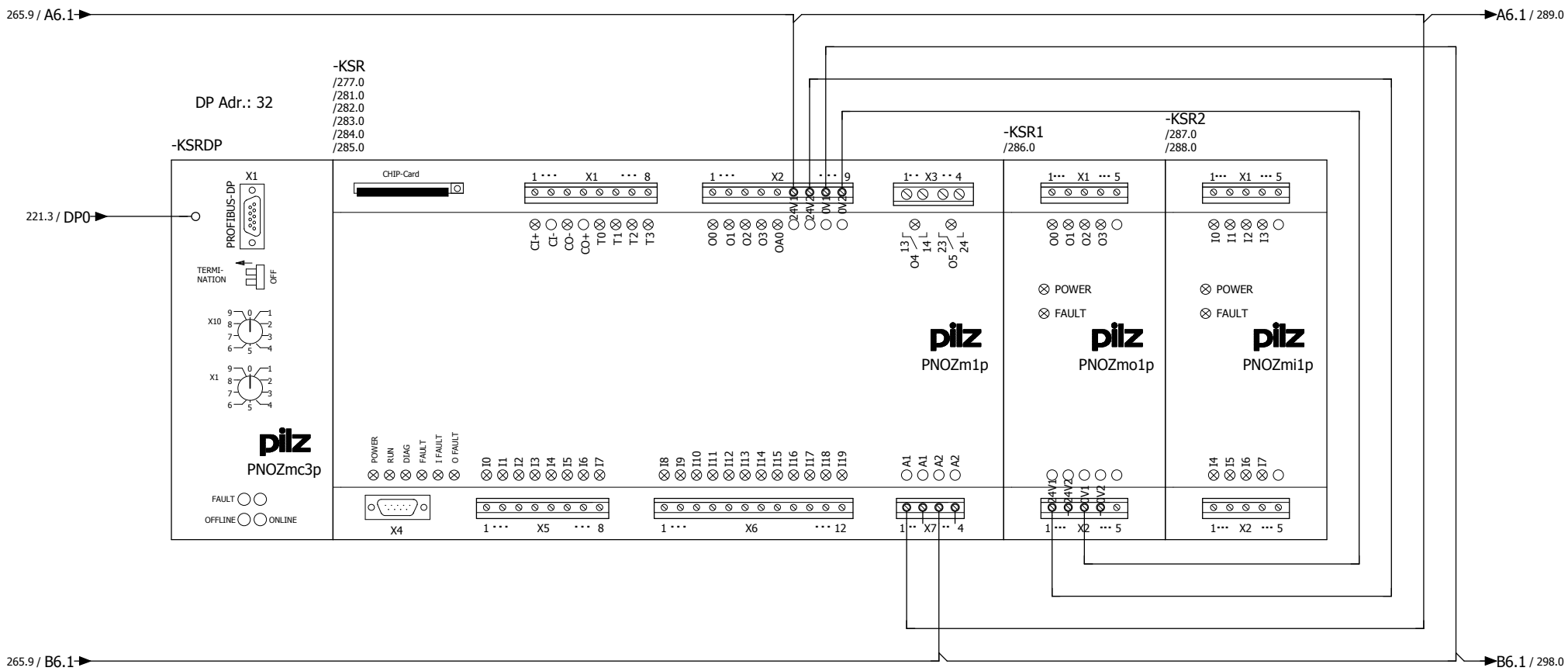

PNOZ mc3p
773721
PNOZ mc3p
773721

PNOZ m1p
773100
PNOZ m1p
773100

PNOZ mo1p
773500

PNOZ mi1p
773400

Duferco Clabecq

Management codes				Document identification				
5.3.0.0	CE	000	DW	QTPC	L04	ROSL	D	0049
System	Phase	Area	Typology	Project	Lot	Company	D/S	Number

275 277

						Date	30.01.2012	Duferco (SBM 2) Schaltschrank	
						Dus			
Rev.	Date	Description	Prepared	Checked	Approved			in place of	Replaced by

RÖSLER finding a better way ...

Control
saftey function PNOZ multi

= ES
+ S

01-130070 00

Page 276
from 565

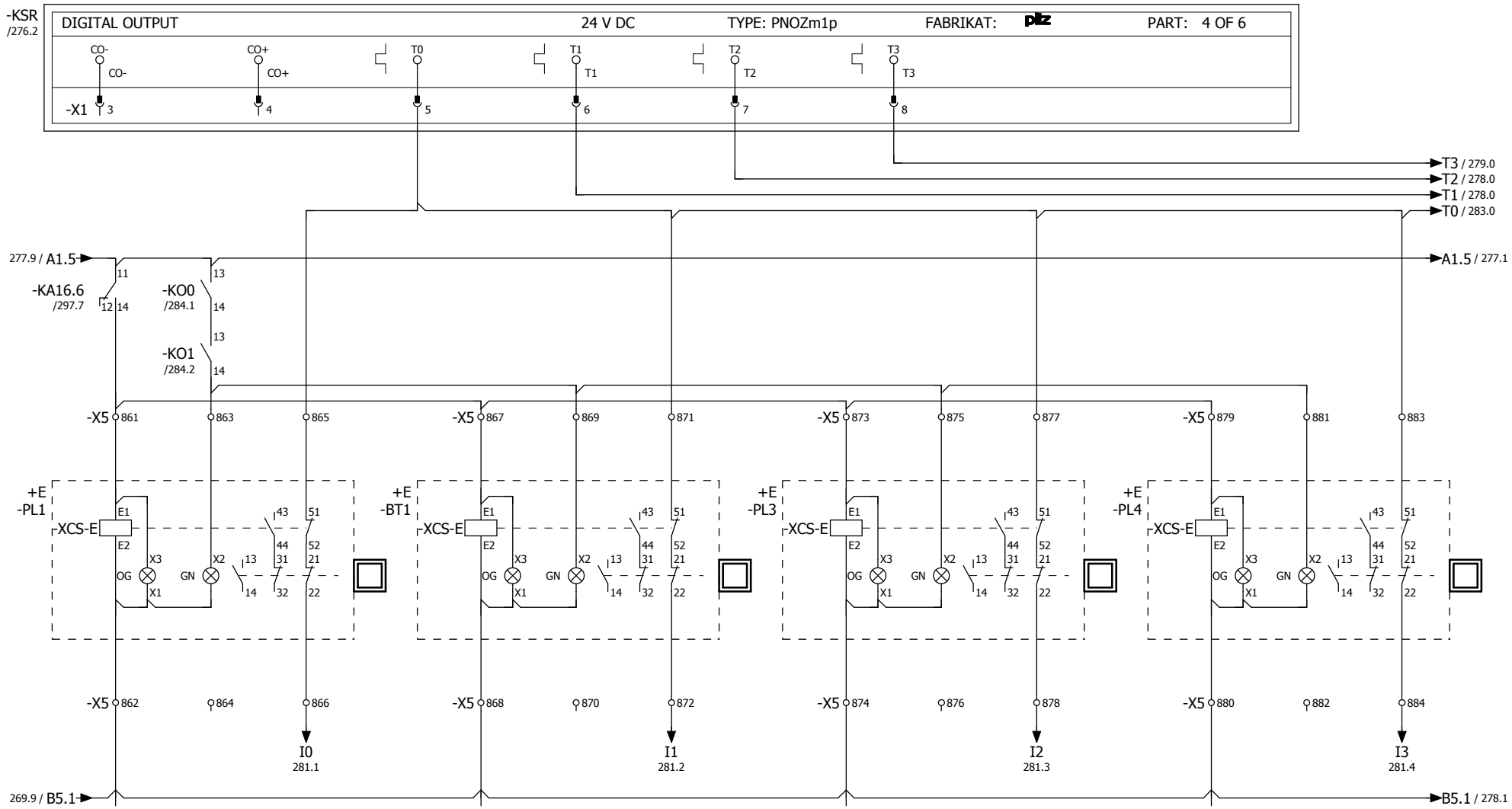

PL1

Endschalter 1
Tür Schutzgitter
Einlauf Duferco

limit switch 1
door safety fence
inlet Duferco

ROS1

Endschalter 1
Tür Schutzgitter
Einlauf SBM2

limit switch 1
door safety fence
inlet SBM2

PL3

Endschalter 3
Tür Schutzgitter
Einlauf Duferco

limit switch 3
door safety fence
inlet Duferco

PL4

Endschalter 4
Tür Schutzgitter
Einlauf Duferco

limit switch 4
door safety fence
inlet Duferco

Duferco Clabecq

Management codes				Document identification				
5.3.0.0	CE	000	DW	QTPC	L04	ROSL	D	0049
System	Phase	Area	Typology	Project	Lot	Company	D/S	Number

Rev.	Date	Description	Prepared	Checked	Approved			
						Date	30.01.2012	
						Dus		

Duferco (SBM 2) Schaltschrank

in place of | Replaced by

RÖSLER finding a better way ...

Control
door safety fence range 1

= ES
+ S

01-130070 00

Page 277
from 565

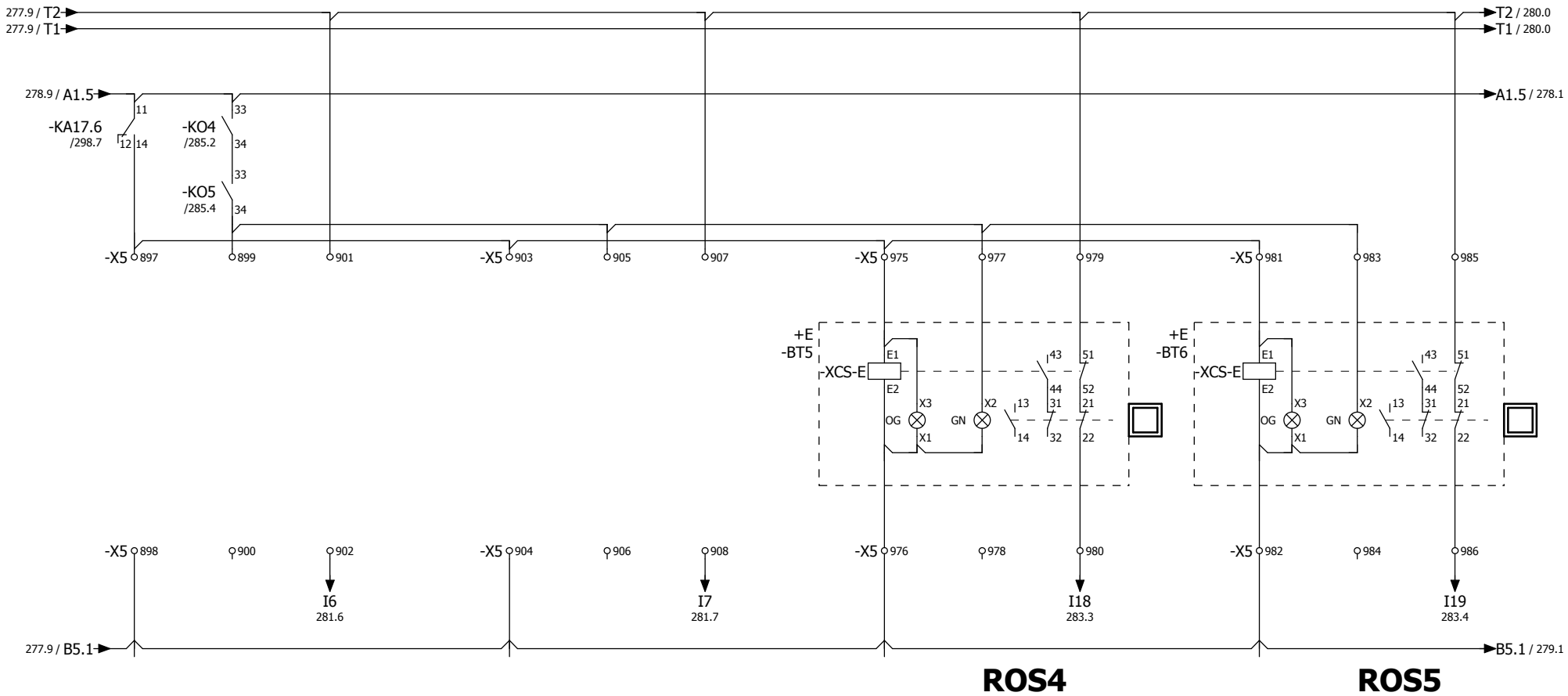

ROS4

Reserve

reserve

Reserve

reserve

Endschalter 1
Tür Farbtrockner
SBM2

limit switch 1
door paint drier
SBM2

ROS5

Endschalter 2
Tür Farbtrockner
SBM2

limit switch 2
door paint drier
SBM2

Duferco Clabecq

Management codes				Document identification				
5.3.0.0	CE	000	DW	QTPC	L04	ROSL	D	0049
System	Phase	Area	Typology	Project	Lot	Company	D/S	Number

Rev.	Date	Description	Prepared	Checked	Approved			
						Date	30.01.2012	
						Dus		

Duferco (SBM 2) Schaltschrank

in place of | Replaced by

RÖSLER finding a better way ...

Control
door safety fence range 3

= ES
+ S

01-130070 00

Page 278
from 565

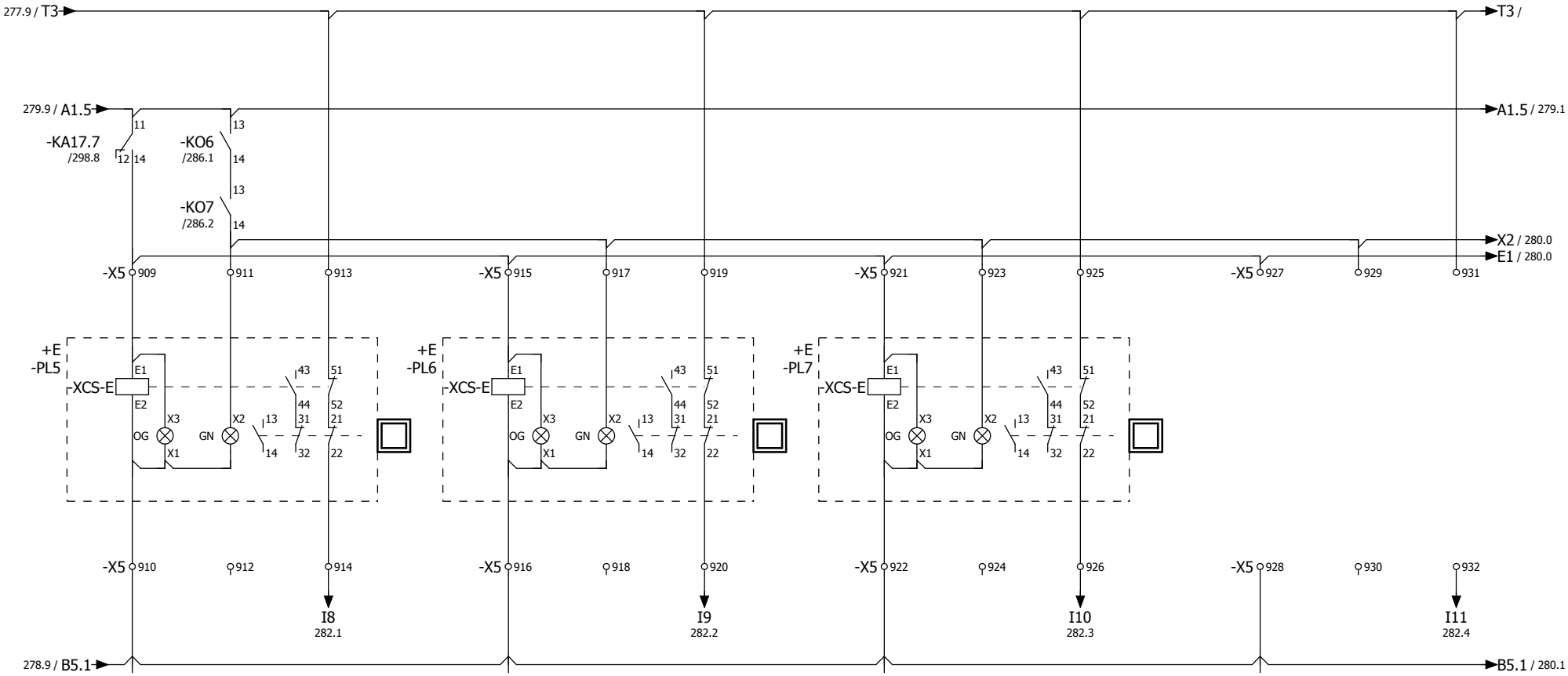

PL5

Endschalter 1
Tür Schutzgitter
Auslauf Duferco

limit switch 1
door safety fence
outlet Duferco

PL6

Endschalter 2
Tür Schutzgitter
Auslauf Duferco

limit switch 2
door safety fence
outlet Duferco

PL7

Endschalter 3
Tür Schutzgitter
Auslauf Duferco

limit switch 3
door safety fence
outlet Duferco

Reserve

reserve

Duferco Clabecq

Management codes				Document identification				
5.3.0.0	CE	000	DW	QTPC	L04	ROSL	D	0049
System	Phase	Area	Typology	Project	Lot	Company	D/S	Number

278 280

Rev.	Date	Description	Prepared	Checked	Approved			
						Date	30.01.2012	
						Dus		

Duferco (SBM 2) Schaltschrank

in place of | Replaced by

RÖSLER finding a better way ...

= ES
+ S

01-130070 00

Page 279
from 565

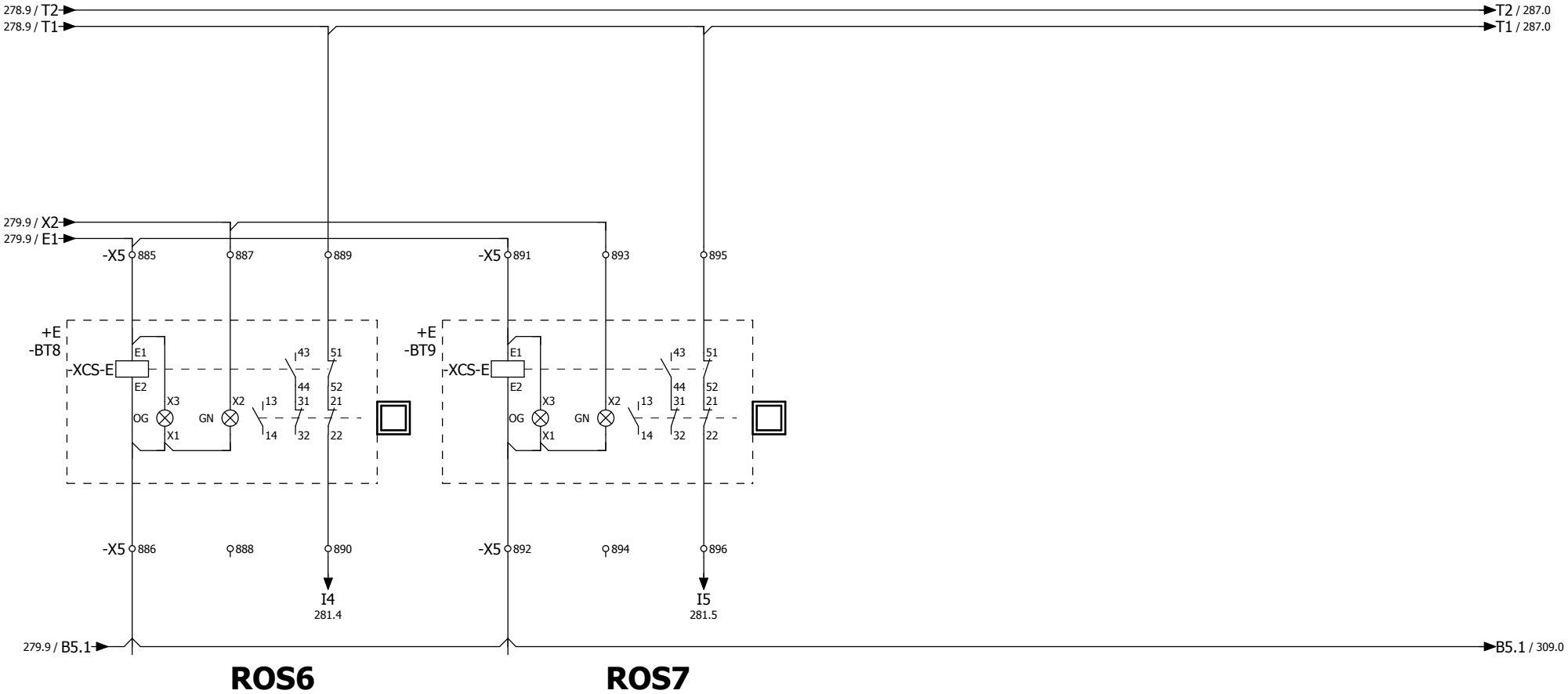

ROS6

Endschalter 1
Tür Schutzgitter
Auslauf SBM2

limit switch 1
door safety fence
outlet SBM2

ROS7

Endschalter 2
Tür Schutzgitter
Auslauf SBM2

limit switch 2
door safety fence
outlet SBM2

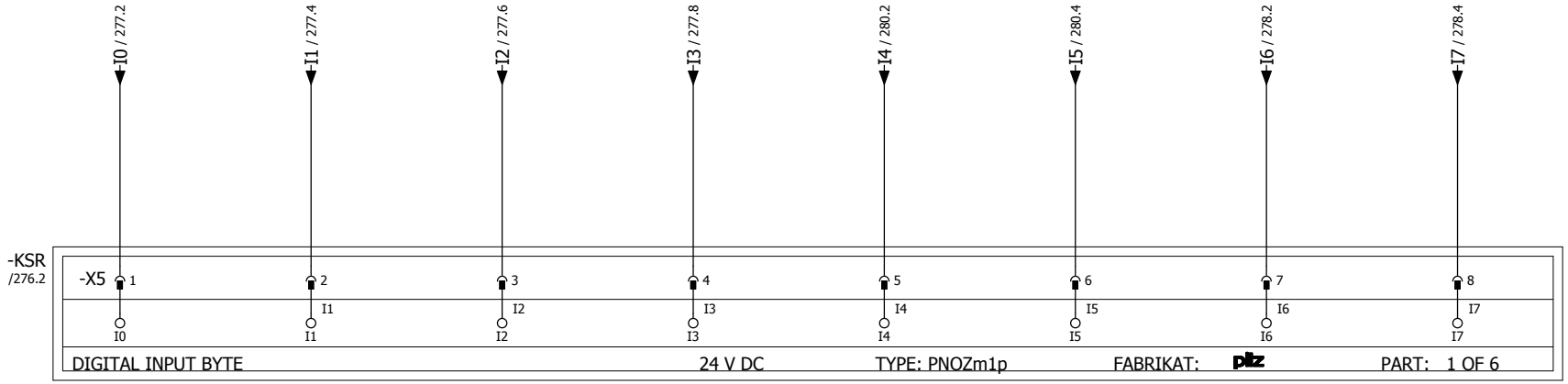

Endschalter 1 Tür Schutzgitter Einlauf Duferco	Endschalter 1 Tür Schutzgitter Einlauf SBM2	Endschalter 3 Tür Schutzgitter Einlauf Duferco	Endschalter 4 Tür Schutzgitter Einlauf Duferco	Endschalter 1 Tür Schutzgitter Auslauf SBM2	Endschalter 2 Tür Schutzgitter Auslauf SBM2	Reserve reserve	Reserve reserve
limit switch 1 door safety fence inlet Duferco	limit switch 1 door safety fence inlet SBM2	limit switch 3 door safety fence inlet Duferco	limit switch 4 door safety fence inlet Duferco	limit switch 1 door safety fence outlet SBM2	limit switch 2 door safety fence outlet SBM2		

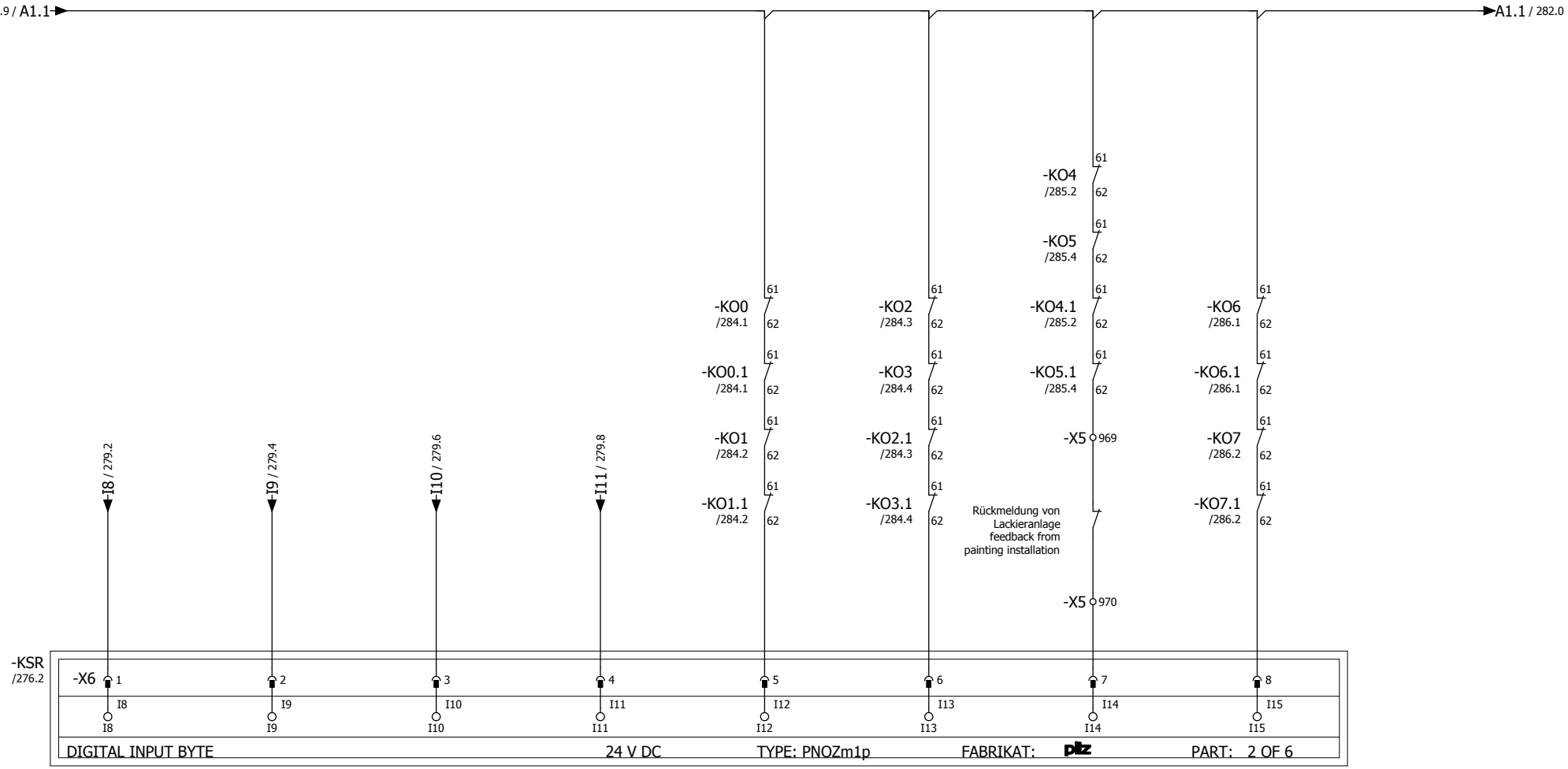

Endschalter 1 Tür Schutzgitter Auslauf Duferco	Endschalter 2 Tür Schutzgitter Auslauf Duferco	Endschalter 3 Tür Schutzgitter Auslauf Duferco	Reserve	Rückmeldung Freigabe Einlauf Duferco	Rückmeldung Freigabe SBM2	Rückmeldung Freigabe Lackieranlage	Rückmeldung Tür Schutzgitter Auslauf Duferco
limit switch 1 door safety fence outlet Duferco	limit switch 2 door safety fence outlet Duferco	limit switch 3 door safety fence outlet Duferco	reserve	feedback release inlet Duferco	feedback release SBM2	feedback release painting installation	feedback door safety fence outlet Duferco

Duferco Clabecq

Management codes				Document identification				
5.3.0.0	CE	000	DW	QTPC	L04	ROSL	D	0049
System	Phase	Area	Typology	Project	Lot	Company	D/S	Number

Rev.	Date	Description	Prepared	Checked	Approved			
						Date	30.01.2012	
						Dus		
							Duferco (SBM 2) Schaltschrank	
							in place of	Replaced by

RÖSLER finding a better way ...

Control
saftey function I8-15

= ES
+ S

01-130070 00

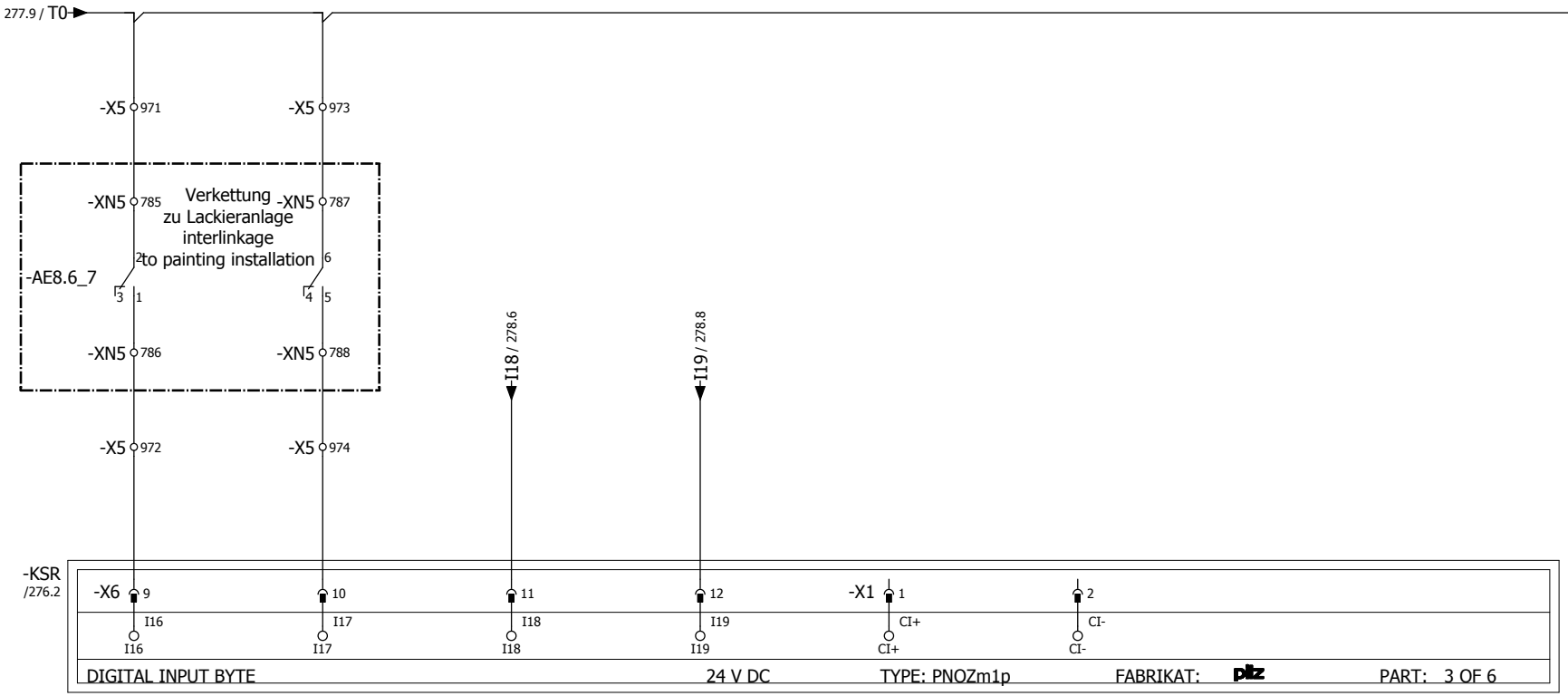

Lackieranlage Tür 1 geschlossen painting installation door 1 closed	Lackieranlage Tür 2 geschlossen painting installation door 2 closed	Endschalter 1 Tür Farbtrockner SBM2 limit switch 1 door paint drier SBM2	Endschalter 2 Tür Farbtrockner SBM2 limit switch 2 door paint drier SBM2

Duferco Clabecq

Management codes				Document identification				
5.3.0.0	CE	000	DW	QTPC	L04	ROSL	D	0049
System	Phase	Area	Typology	Project	Lot	Company	D/S	Number

Rev.	Date	Description	Prepared	Checked	Approved			
						Date	30.01.2012	
						Dus		
							Duferco (SBM 2) Schaltschrank	
							in place of	Replaced by

RÖSLER finding a better way ...

Control
saftey function I16-19

= ES
+ S

01-130070 00

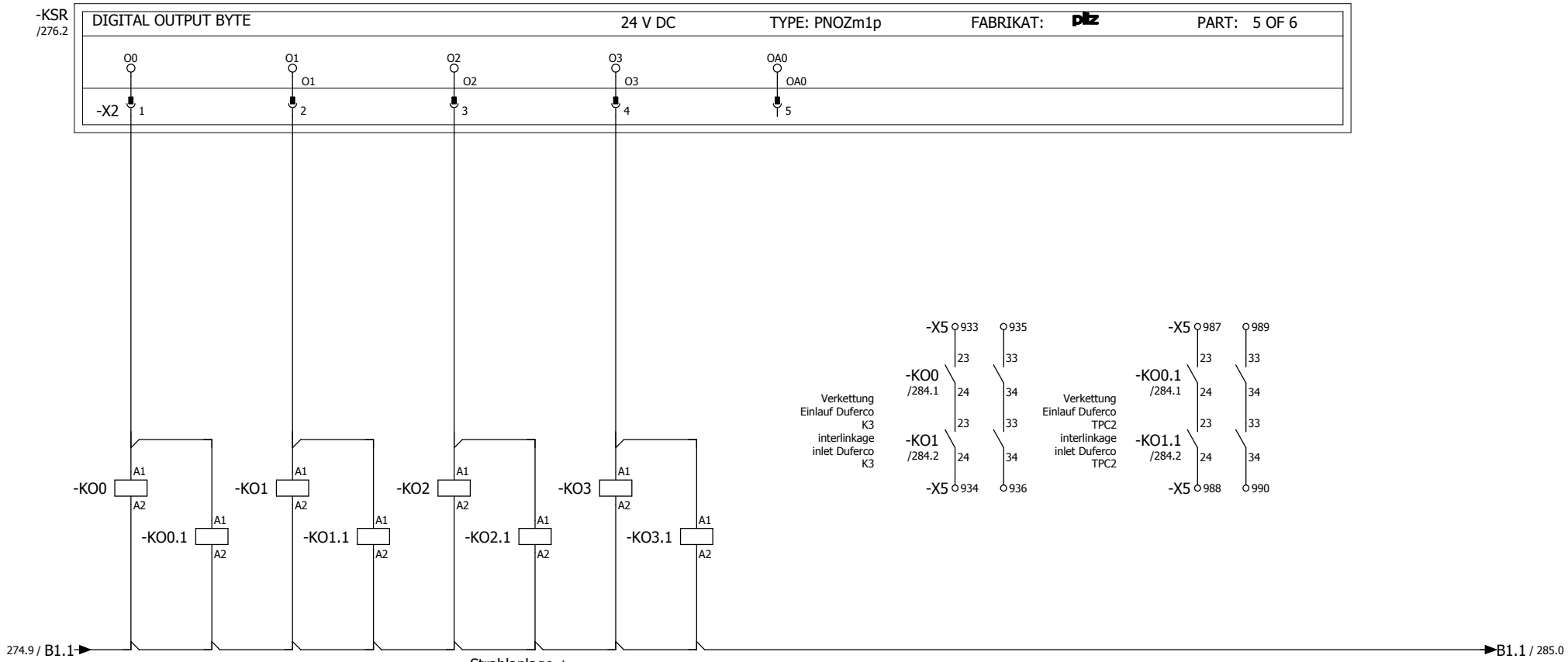

Einlauf +
Zwischenrollgang
Vorwärmer

Strahlanlage +
Zwischenrollgang
Lackieranlage +
Kettenförderer +
Hydraulik

Freigabe
Bereich 1

release
range 1

Freigabe
Bereich 2

release
range 2

13 — 14 /277.1
23 — 24 /284.6
33 — 34 /284.6
43 — 44 /270.1
53 — 54 /271.0
61 — 62 /282.4
71 — 72
83 — 84 /3.3

13 — 14 /68.3
23 — 24 /284.7
33 — 34 /284.7
43 — 44
53 — 54
61 — 62 /282.4
71 — 72
83 — 84

13 — 14 /277.1
23 — 24 /284.6
33 — 34 /284.6
43 — 44 /270.1
53 — 54 /271.0
61 — 62 /282.4
71 — 72
83 — 84 /3.3

13 — 14 /68.3
23 — 24 /284.7
33 — 34 /284.7
43 — 44
53 — 54
61 — 62 /282.4
71 — 72
83 — 84

13 — 14 /114.3
23 — 24 /285.7
33 — 34 /285.8
43 — 44 /271.6
53 — 54 /271.4
61 — 62 /282.5
71 — 72
83 — 84 /117.2

13 — 14 /285.6
23 — 24 /285.6
33 — 34
43 — 44
53 — 54
61 — 62 /282.5
71 — 72
83 — 84

13 — 14 /114.3
23 — 24 /285.7
33 — 34 /285.8
43 — 44 /271.6
53 — 54 /271.4
61 — 62 /282.5
71 — 72
83 — 84 /117.2

13 — 14 /285.6
23 — 24 /285.6
33 — 34
43 — 44
53 — 54
61 — 62 /282.5
71 — 72
83 — 84

283

Duferco Clabecq

Management codes				Document identification				
5.3.0.0	CE	000	DW	QTPC	L04	ROSL	D	0049
System	Phase	Area	Typology	Project	Lot	Company	D/S	Number

285

Rev.	Date	Description	Prepared	Checked	Approved			
						Date	30.01.2012	
						Dus		

Duferco (SBM 2) Schaltschrank

in place of | Replaced by

RÖSLER finding a better way ...

Control
saftey function O0-3

= ES
+ S

01-130070 00

Page 284
from 565

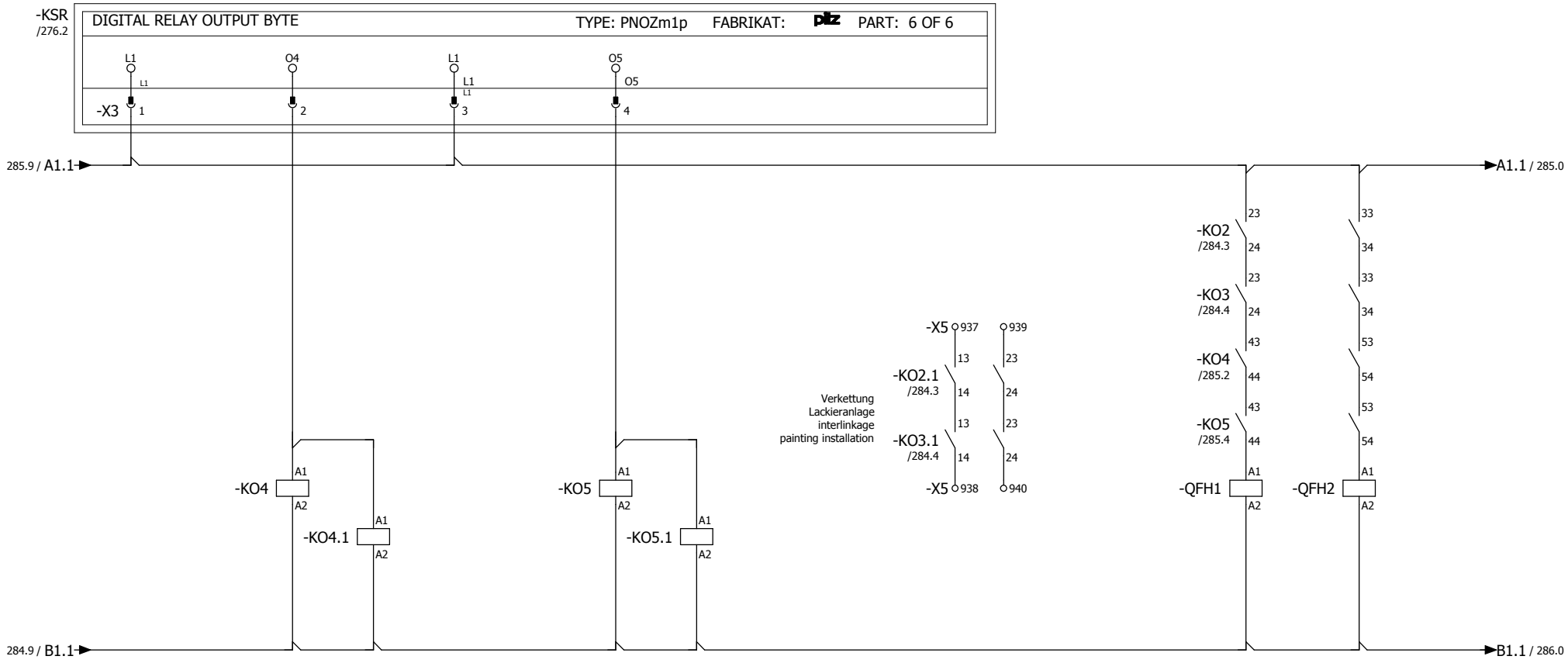

Zwischenrollgang
Lackieranlage +
Kettenförderer +
Hydraulik

Freigabe
Bereich 3

release
range 3

13 — 14 /271.5
23 — 24 /271.6
33 — 34 /278.1
43 — 44 /285.7
53 — 54 /285.8
61 — 62 /282.6
71 — 72
83 — 84 /115.3

13 — 14 /117.3
23 — 24
33 — 34
43 — 44
53 — 54
61 — 62 /282.6
71 — 72
83 — 84

13 — 14 /271.5
23 — 24 /271.6
33 — 34 /278.1
43 — 44 /285.7
53 — 54 /285.8
61 — 62 /282.6
71 — 72
83 — 84 /115.3

13 — 14 /117.3
23 — 24
33 — 34
43 — 44
53 — 54
61 — 62 /282.6
71 — 72
83 — 84

Freigabe
Hydraulikaggregat

release
hydraulic aggregate

1 — 2 /209.1
3 — 4 /209.1
5 — 6 /209.1
13 — 14

1 — 2 /209.1
3 — 4 /209.1
5 — 6 /209.1
13 — 14

Duferco
Clabecq

Management codes				Document identification				
5.3.0.0	CE	000	DW	QTPC	L04	ROSL	D	0049
System	Phase	Area	Typology	Project	Lot	Company	D/S	Number

Rev.	Date	Description	Prepared	Checked	Approved			
						Date	30.01.2012	
						Dus		

Duferco (SBM 2) Schaltschrank

in place of | Replaced by

RÖSLER finding a better way ...

Control
saftey function O4-5

= ES
+ S

01-130070 00

Page 285
from 565

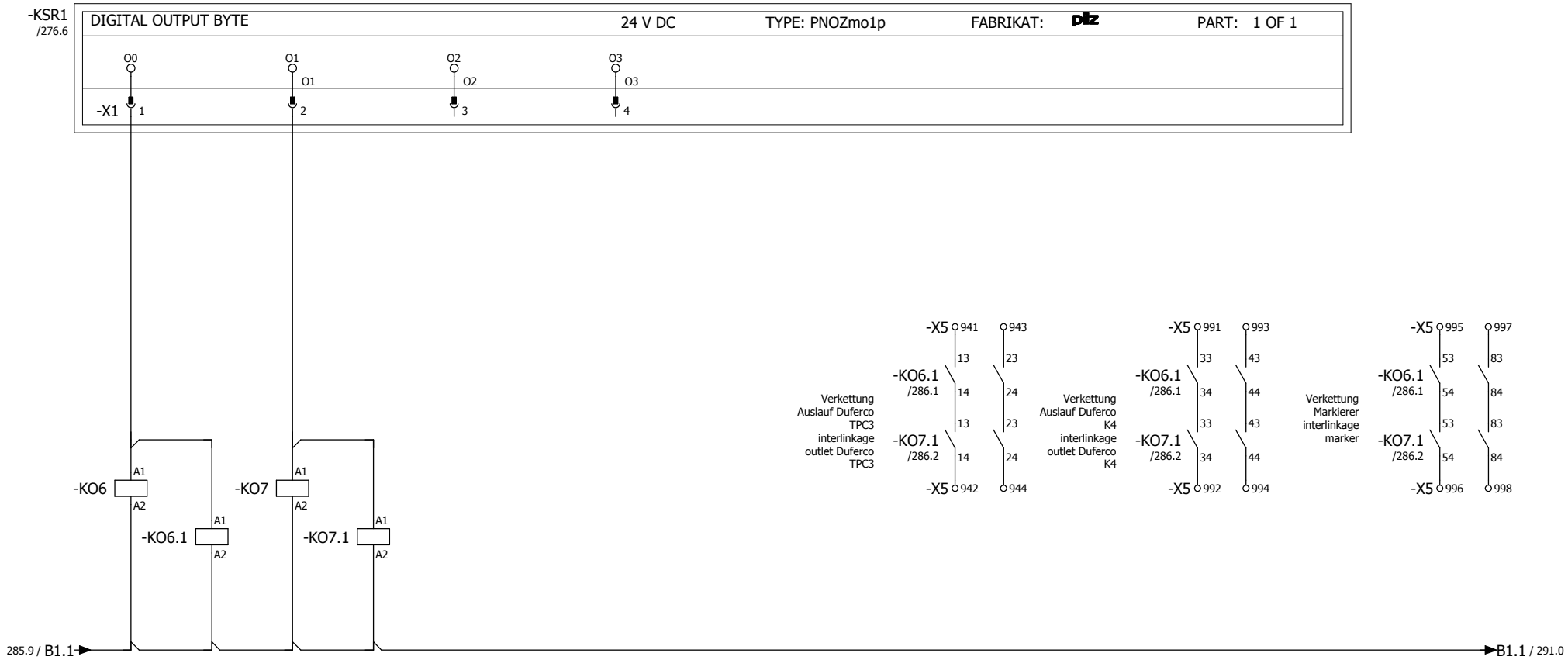

Kettenförderer +
Auslauf

Freigabe
Bereich 4

release
range 4

13 — 14 /279.1	13 — 14 /286.6	13 — 14 /279.1	13 — 14 /286.6
23 — 24 /271.6	23 — 24 /286.6	23 — 24 /271.6	23 — 24 /286.6
33 — 34 /272.1	33 — 34 /286.7	33 — 34 /272.1	33 — 34 /286.7
43 — 44 /117.3	43 — 44 /286.7	43 — 44 /117.3	43 — 44 /286.7
53 — 54 /133.3	53 — 54 /286.8	53 — 54 /133.3	53 — 54 /286.8
61 — 62 /282.7	61 — 62 /282.7	61 — 62 /282.7	61 — 62 /282.7
71 — 72	71 — 72	71 — 72	71 — 72
83 — 84 /119.3	83 — 84 /286.9	83 — 84 /119.3	83 — 84 /286.9

Duferco Clabecq

Management codes				Document identification				
5.3.0.0	CE	000	DW	QTPC	L04	ROSL	D	0049
System	Phase	Area	Typology	Project	Lot	Company	D/S	Number

Rev.	Date	Description	Prepared	Checked	Approved	Date 30.01.2012	Duferco (SBM 2) Schaltschrank	
						Dus		
							in place of	Replaced by

RÖSLER finding a better way ...

Control
saftey function O6-9

= ES
+ S

01-130070 00

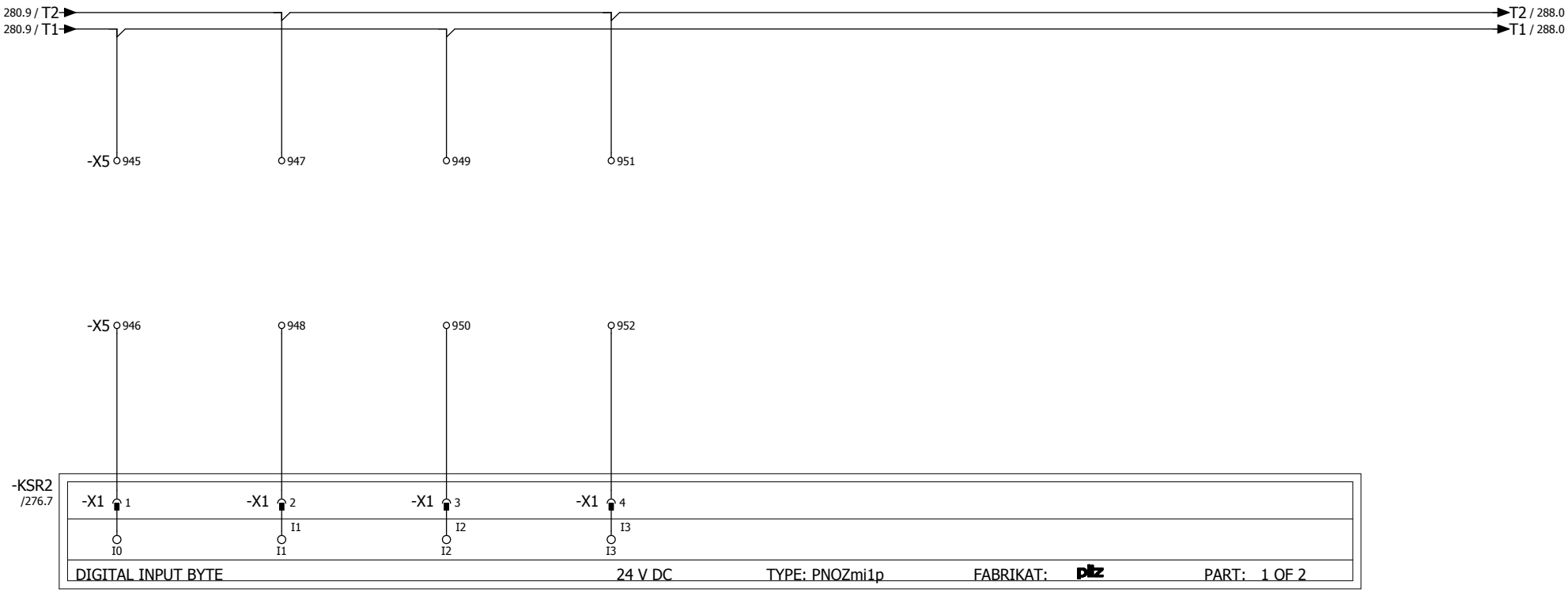

Schlüsselschalter Kontrollraum Schutzgitter Einlauf Duferco	Schlüsselschalter Kontrollraum Schutzgitter Einlauf Duferco	Schlüsselschalter Kontrollraum Schutzgitter SBM2 Kanal 1	Schlüsselschalter Kontrollraum Schutzgitter SBM2 Kanal 2
key switch control room safety fence inlet Duferco	key switch control room safety fence inlet Duferco	key switch control room safety fence SBM2 channel 1	key switch control room safety fence SBM2 channel 2

Duferco Clabecq

Management codes				Document identification				
5.3.0.0	CE	000	DW	QTPC	L04	ROSL	D	0049
System	Phase	Area	Typology	Project	Lot	Company	D/S	Number

Rev.	Date	Description	Prepared	Checked	Approved			
						Date	30.01.2012	
						Dus		
							Duferco (SBM 2) Schaltschrank	
							in place of	Replaced by

RÖSLER finding a better way ...

Control
saftey function I20-23

= ES
+ S

01-130070 00

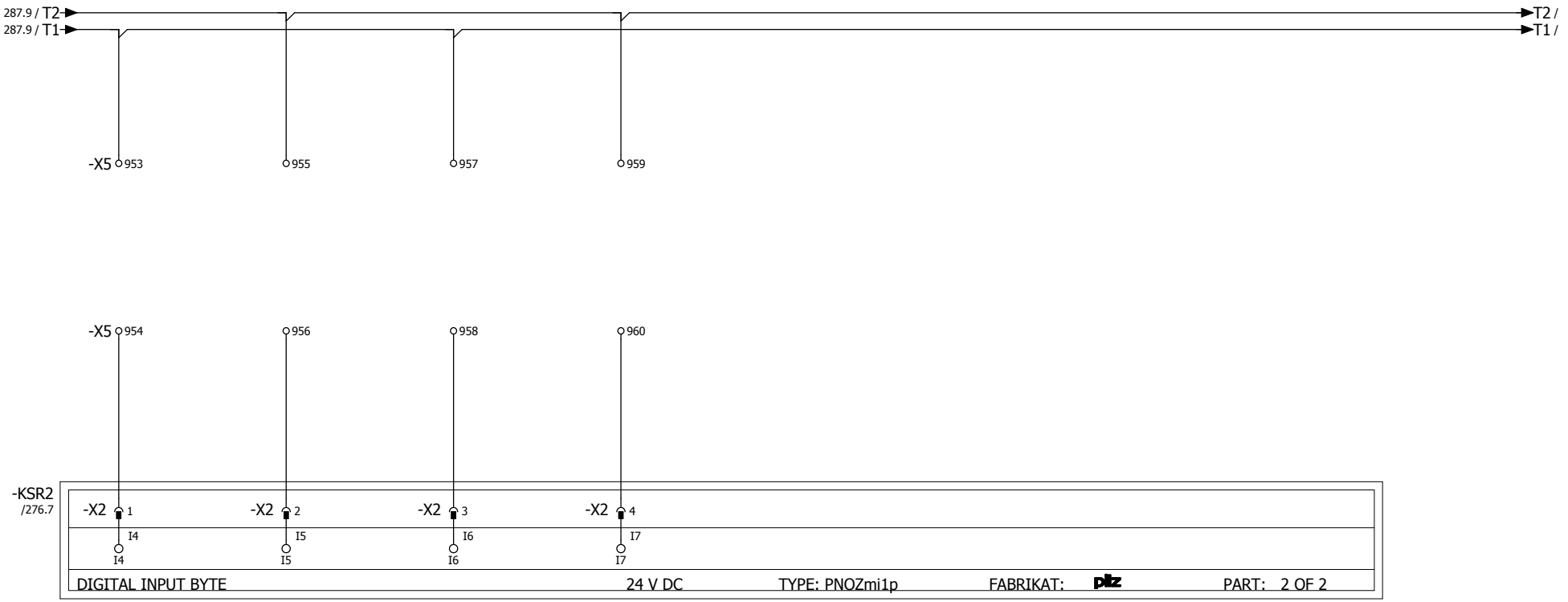

Schlüsselschalter Kontrollraum Schutzgitter Auslauf Duferco	Schlüsselschalter Kontrollraum Schutzgitter Auslauf Duferco	Schlüsselschalter Kontrollraum Schutzgitter Linie Komplett	Schlüsselschalter Kontrollraum Schutzgitter Linie Komplett
key switch control room safety fence outlet Duferco	key switch control room safety fence outlet Duferco	key switch control room safety fence line Complete	key switch control room safety fence line Complete

Duferco Clabecq

Management codes				Document identification				
5.3.0.0	CE	000	DW	QTPC	L04	ROSL	D	0049
System	Phase	Area	Typology	Project	Lot	Company	D/S	Number

						Date 30.01.2012	Duferco (SBM 2) Schaltschrank	
						Dus		
Rev.	Date	Description	Prepared	Checked	Approved		in place of	Replaced by

RÖSLER finding a better way ...

Control
saftey function I24-27

= ES
+ S

01-130070 00

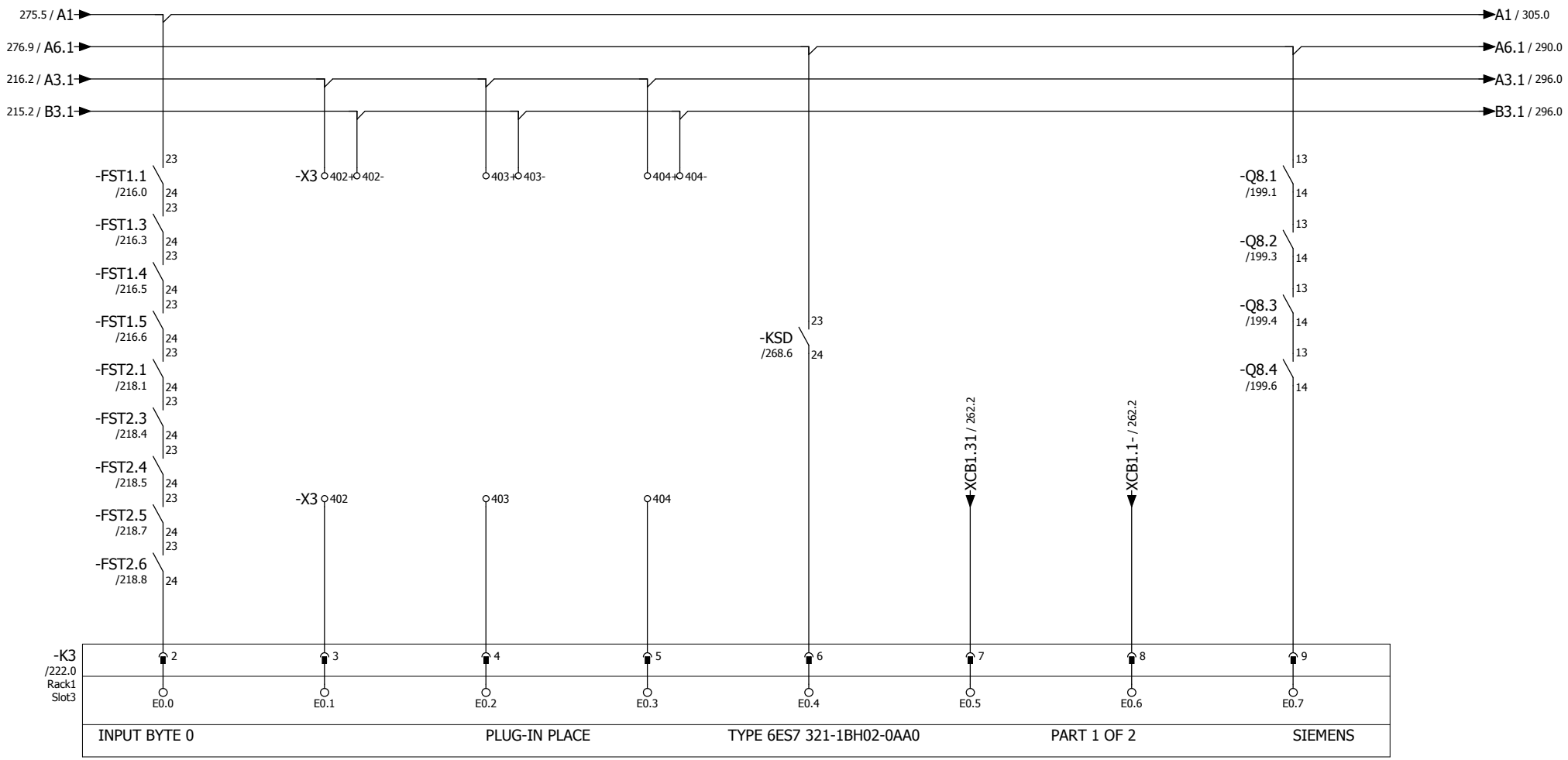

Steuerspannung Ein control voltage on	Reserve reserve	Reserve reserve	Reserve reserve	Schleuderrad Deckel geschlossen blast wheel cover closed	Mobile Panel Analog Anschlussbox 1 Mobile Panel analog connection box 1	Freigabe von Anschlussbox 1 release from connection box 1	Motorschutz Werkstücke Reinigungsstation motor ptot. components cleaning station

Duferco Clabecq

Management codes				Document identification				
5.3.0.0	CE	000	DW	QTPC	L04	ROSL	D	0049
System	Phase	Area	Typology	Project	Lot	Company	D/S	Number

Rev.	Date	Description	Prepared	Checked	Approved	Date 30.01.2012	Duferco (SBM 2) Schaltschrank	RÖSLER finding a better way ...	Control EB 0	= ES	01-130070 00	Page 289
						Dus				+ S		from 565
							in place of	Replaced by				

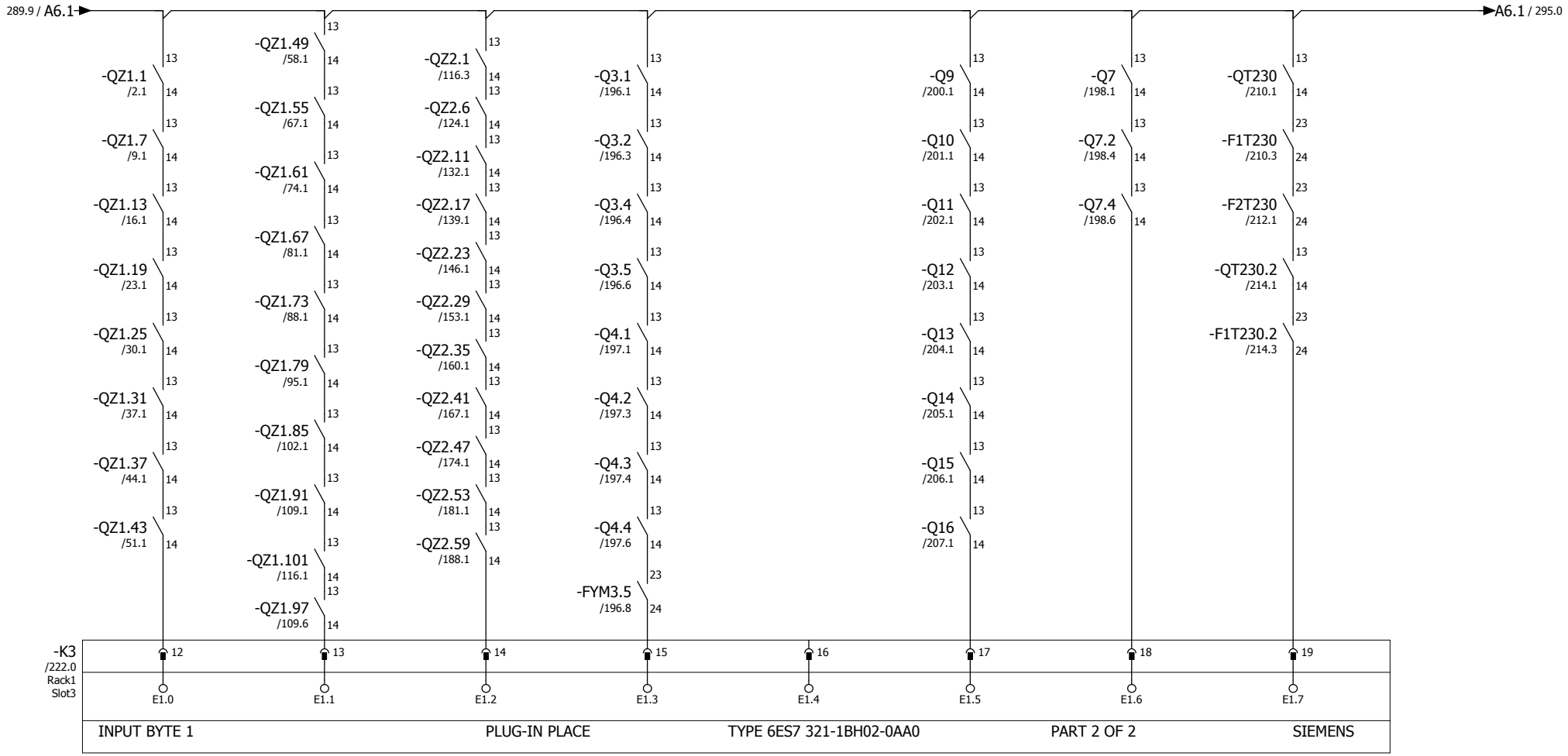

Motorschutz Zuleitung Frequenzumrichter Einlauf M1 - M48 motor prot. input lead frequency converter inlet M1 - M48	Motorschutz Zuleitung Frequenzumrichter Einlauf M49 - Auslauf M4 motor prot. input lead frequency converter inlet M49 - outlet M4	Motorschutz Zuleitung Frequenzumrichter Auslauf M5 - M63 motor prot. input lead frequency converter outlet M5 - M63	Motorschutz Strahlmittel fördern mot. protect. blast media conveying	Reserve reserve	Motorschutz Schleuderräder mot. protect. parts convey	Motorschutz Filter motor ptot. Filter	Überwachung 230V Verbraucher surveillance 230V consumer

Duferco Clabecq

Management codes				Document identification				
5.3.0.0	CE	000	DW	QTPC	L04	ROSL	D	0049
System	Phase	Area	Typology	Project	Lot	Company	D/S	Number

Rev.	Date	Description	Prepared	Checked	Approved	Date 30.01.2012	Duferco (SBM 2) Schaltschrank	RÖSLER finding a better way ...	Control EB 1	= ES	01-130070 00	Page 290
						Dus				+ S		from 565
							in place of	Replaced by				

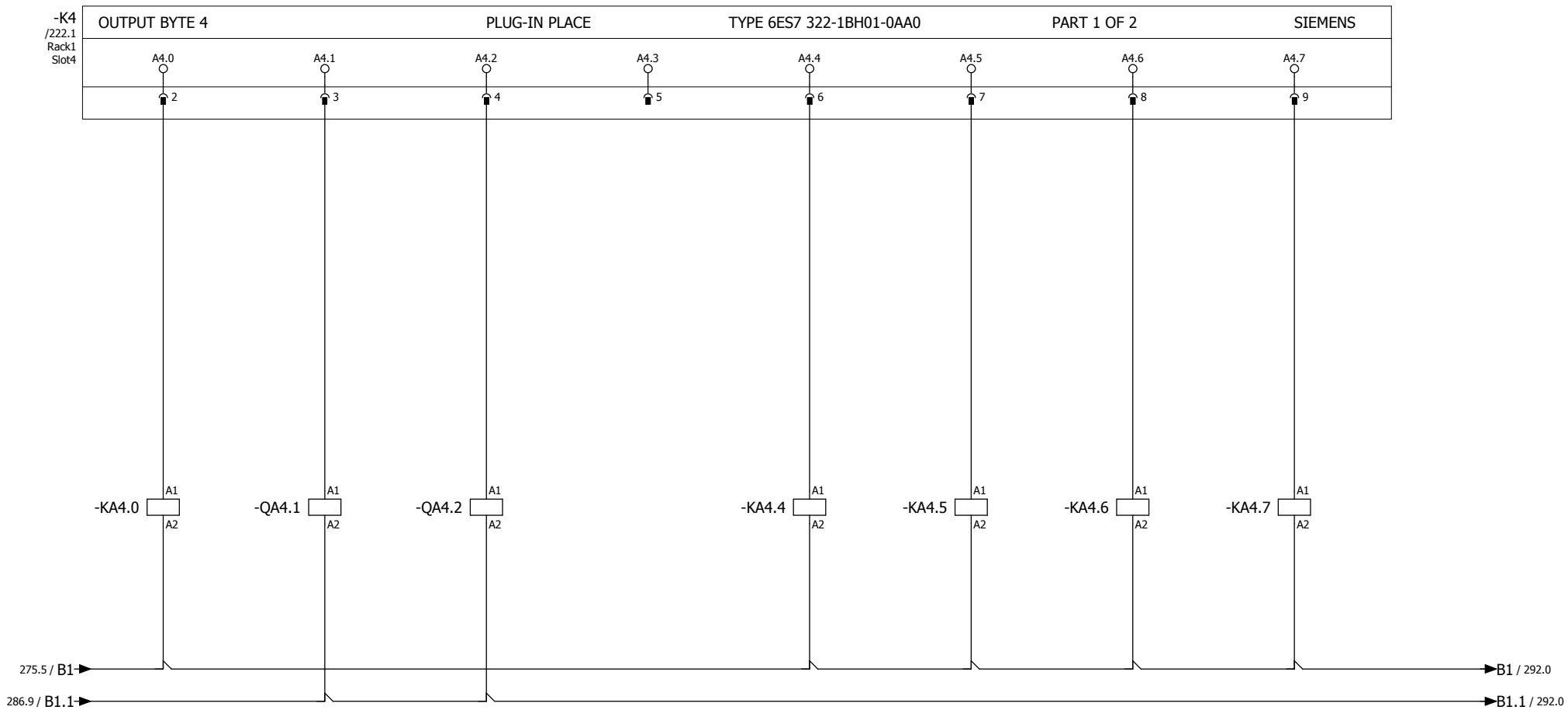

Motor Filter Motor Filter	Motor Zellenradschleuse Motor cell wheel gate	Förderschnecke Filter entleeren screw conveyor Filter discharge	Reserve reserve	Brenner Heizleistung erhöhen burner heating raise	Brenner Heizleistung senken burner heating sinking	Zuleitung Frequenzwandler Rollenbahn input lead frequency converter roll conveyor	Zuleitung Frequenzwandler Schleuderrad 1-8 input lead frequency converter blasting wheel 1-8
					14 – 11 /208.6 12	13 – 14 /270.1 23 – 24 /271.0 33 – 34 /272.1 43 – 44	13 – 14 /273.3 23 – 24 33 – 34 43 – 44
14 – 11 /273.1 12	1 2 /198.4 3 4 /198.4 5 6 /198.5 13 – 14	1 2 /198.6 3 4 /198.6 5 6 /198.6 13 – 14		14 – 11 /208.6 12			

Duferco Clabecq

Management codes				Document identification				
5.3.0.0	CE	000	DW	QTPC	L04	ROSL	D	0049
System	Phase	Area	Typology	Project	Lot	Company	D/S	Number

290 292

Rev.	Date	Description	Prepared	Checked	Approved			
						Date	30.01.2012	
						Dus		
							in place of	Replaced by

Duferco (SBM 2) Schaltschrank

RÖSLER finding a better way ...

Control AB
4

= ES
+ S

01-130070 00

Page 291
from 565

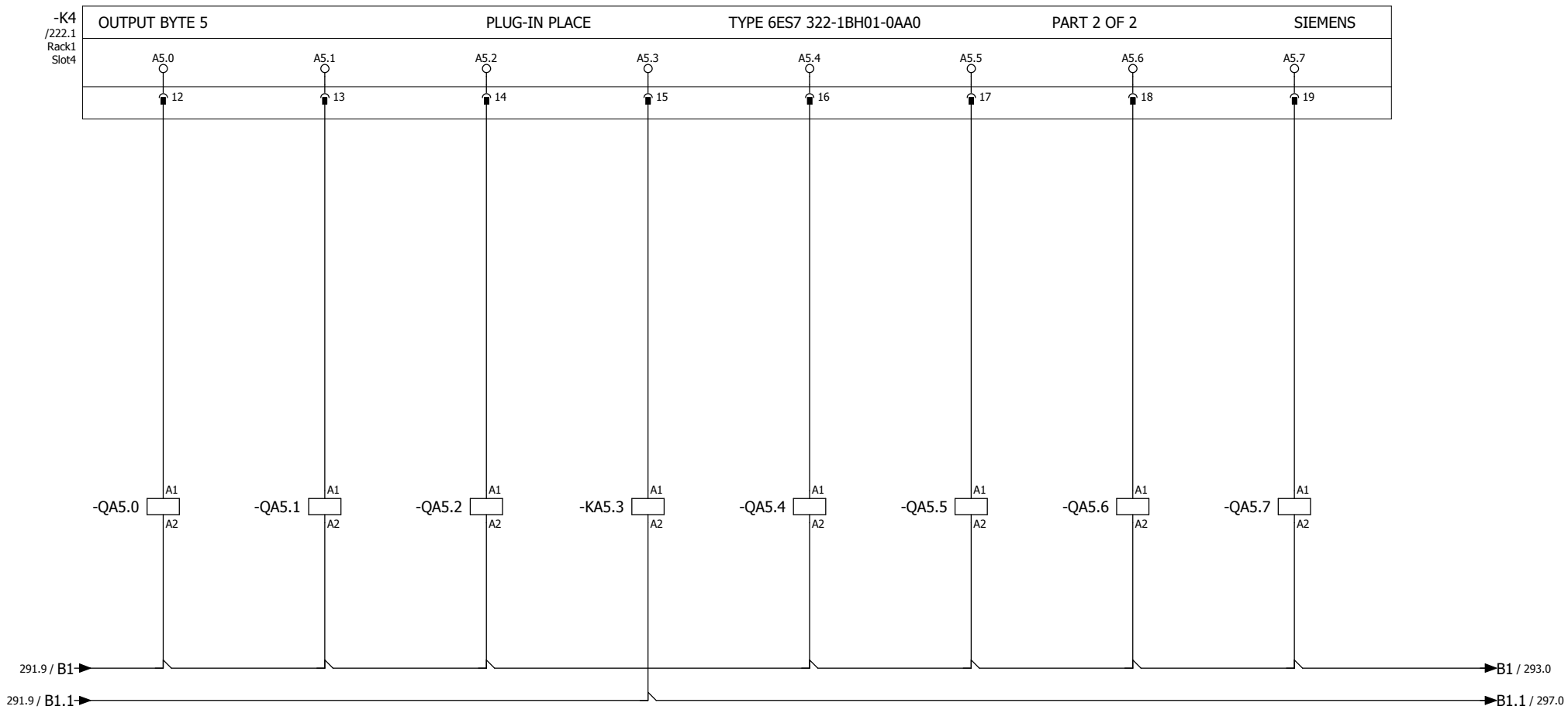

Förderschnecke 1 Strahlanlage längs	Förderschnecke 2 Strahlanlage längs	Förderschnecke Strahlanlage quer unten	Becherwerk	Förderschnecke Strahlmittel Behälter	Förderschnecke Versorgung Schleuderrad unten	Förderschnecke Staub	Förderschnecke Strahlanlage quer oben
screw conveyor 1 blasting system lengthwise	screw conveyor 2 blasting system lengthwise	screw conveyor blasting system across below	bucket plant	screw conveyor blasting media vessel	screw conveyor supply blasting wheel below	screw conveyor dust	screw conveyor blasting system across above
1 2 /196.1	1 2 /196.3	1 2 /196.4	14 11 /274.4	1 2 /197.1	1 2 /197.3	1 2 /197.4	1 2 /197.6
3 4 /196.1	3 4 /196.3	3 4 /196.4	12	3 4 /197.1	3 4 /197.3	3 4 /197.4	3 4 /197.6
5 6 /196.1	5 6 /196.3	5 6 /196.5		5 6 /197.1	5 6 /197.3	5 6 /197.5	5 6 /197.6
13 14	13 14			13 14	13 14	13 14	

Duferco Clabecq

Management codes				Document identification				
5.3.0.0	CE	000	DW	QTPC	L04	ROSL	D	0049
System	Phase	Area	Typology	Project	Lot	Company	D/S	Number

Rev.	Date	Description	Prepared	Checked	Approved			
						Date	30.01.2012	
						Dus		
							Duferco (SBM 2) Schaltschrank	
							in place of	Replaced by

RÖSLER finding a better way ...

Control AB
5

= ES
+ S

01-130070 00

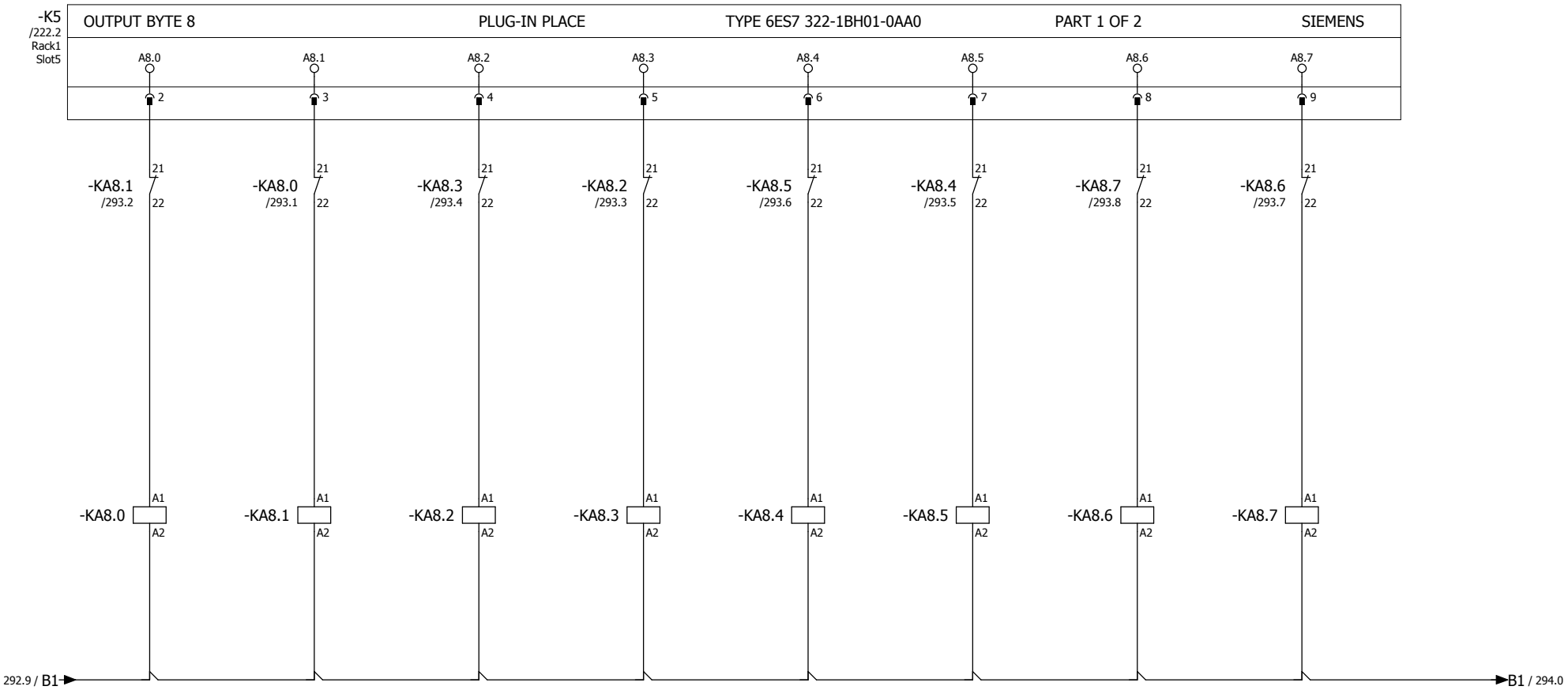

Stellantriebsmotor Schleuderrad 1 öffnen Actuator motor blasting wheel 1 open	Stellantriebsmotor Schleuderrad 1 schliessen Actuator motor blasting wheel 1 close	Stellantriebsmotor Schleuderrad 2 öffnen Actuator motor blasting wheel 2 open	Stellantriebsmotor Schleuderrad 2 schliessen Actuator motor blasting wheel 2 close	Stellantriebsmotor Schleuderrad 3 öffnen Actuator motor blasting wheel 3 open	Stellantriebsmotor Schleuderrad 3 schliessen Actuator motor blasting wheel 3 close	Stellantriebsmotor Schleuderrad 4 öffnen Actuator motor blasting wheel 4 open	Stellantriebsmotor Schleuderrad 4 schliessen Actuator motor blasting wheel 4 close
13 – 14 /212.1	13 – 14 /212.2	13 – 14 /212.3	13 – 14 /212.4	13 – 14 /212.6	13 – 14 /212.6	13 – 14 /212.8	13 – 14 /212.8
21 – 22 /293.2	21 – 22 /293.1	21 – 22 /293.4	21 – 22 /293.3	21 – 22 /293.6	21 – 22 /293.5	21 – 22 /293.8	21 – 22 /293.7
31 – 32	31 – 32	31 – 32	31 – 32	31 – 32	31 – 32	31 – 32	31 – 32
43 – 44	43 – 44	43 – 44	43 – 44	43 – 44	43 – 44	43 – 44	43 – 44

Duferco Clabecq

Management codes				Document identification				
5.3.0.0	CE	000	DW	QTPC	L04	ROSL	D	0049
System	Phase	Area	Typology	Project	Lot	Company	D/S	Number

Rev.	Date	Description	Prepared	Checked	Approved			
						Date	30.01.2012	
						Dus		
							in place of	Replaced by

Duferco (SBM 2) Schaltschrank

RÖSLER finding a better way ...

Control AB
8

= ES
+ S

01-130070 00

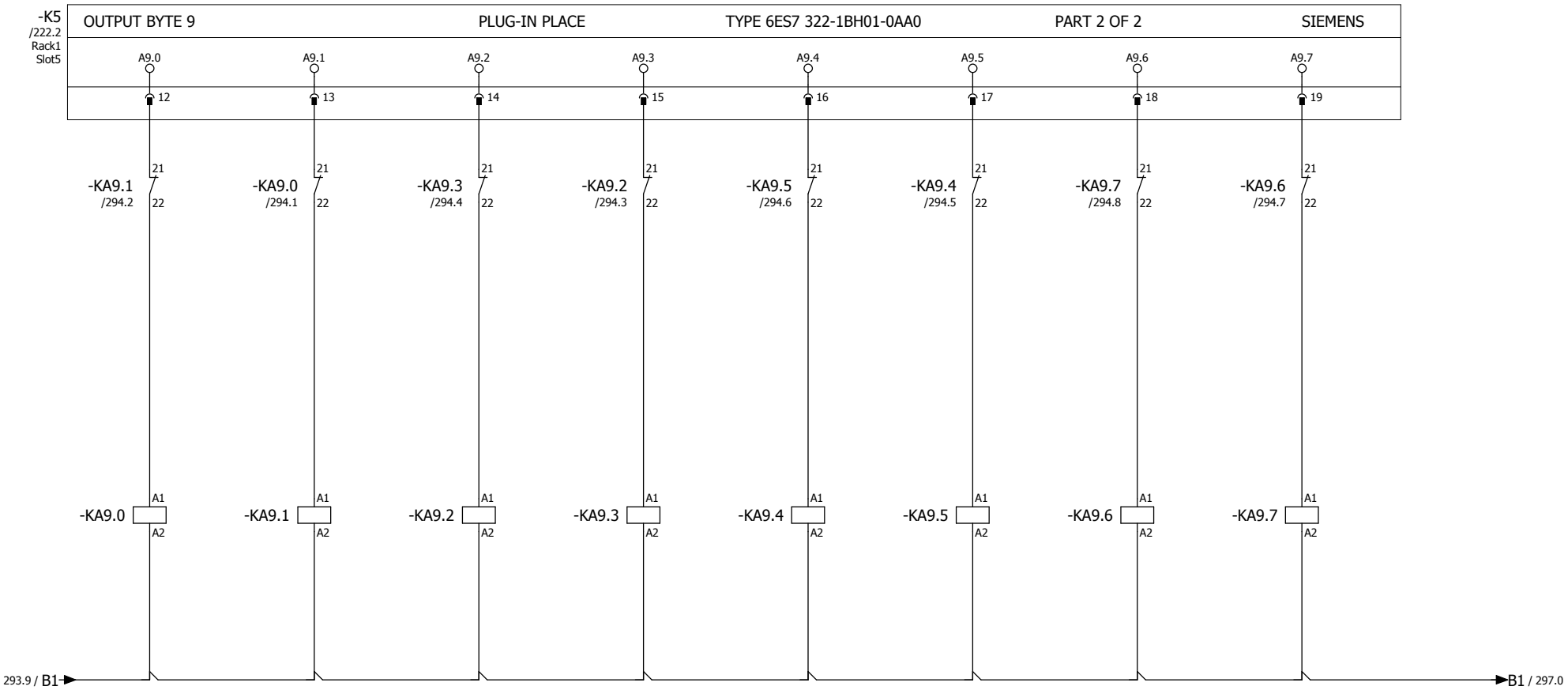

Stellantriebsmotor Schleuderrad 5 öffnen Actuator motor blasting wheel 5 open	Stellantriebsmotor Schleuderrad 5 schließen Actuator motor blasting wheel 5 close	Stellantriebsmotor Schleuderrad 6 öffnen Actuator motor blasting wheel 6 open	Stellantriebsmotor Schleuderrad 6 schließen Actuator motor blasting wheel 6 close	Stellantriebsmotor Schleuderrad 7 öffnen Actuator motor blasting wheel 7 open	Stellantriebsmotor Schleuderrad 7 schließen Actuator motor blasting wheel 7 close	Stellantriebsmotor Schleuderrad 8 öffnen Actuator motor blasting wheel 8 open	Stellantriebsmotor Schleuderrad 8 schließen Actuator motor blasting wheel 8 close
13 – 14 /213.1	13 – 14 /213.2	13 – 14 /213.3	13 – 14 /213.4	13 – 14 /213.6	13 – 14 /213.6	13 – 14 /213.8	13 – 14 /213.8
21 – 22 /294.2	21 – 22 /294.1	21 – 22 /294.4	21 – 22 /294.3	21 – 22 /294.6	21 – 22 /294.5	21 – 22 /294.8	21 – 22 /294.7
31 – 32	31 – 32	31 – 32	31 – 32	31 – 32	31 – 32	31 – 32	31 – 32
43 – 44	43 – 44	43 – 44	43 – 44	43 – 44	43 – 44	43 – 44	43 – 44

Duferco Clabecq

Management codes				Document identification				
5.3.0.0	CE	000	DW	QTPC	L04	ROSL	D	0049
System	Phase	Area	Typology	Project	Lot	Company	D/S	Number

Rev.	Date	Description	Prepared	Checked	Approved	Date 30.01.2012	Duferco (SBM 2) Schaltschrank	RÖSLER finding a better way ...	Control AB 9	= ES	Page 294
						Dus				+ S	
							in place of	Replaced by		01-130070 00	from 565

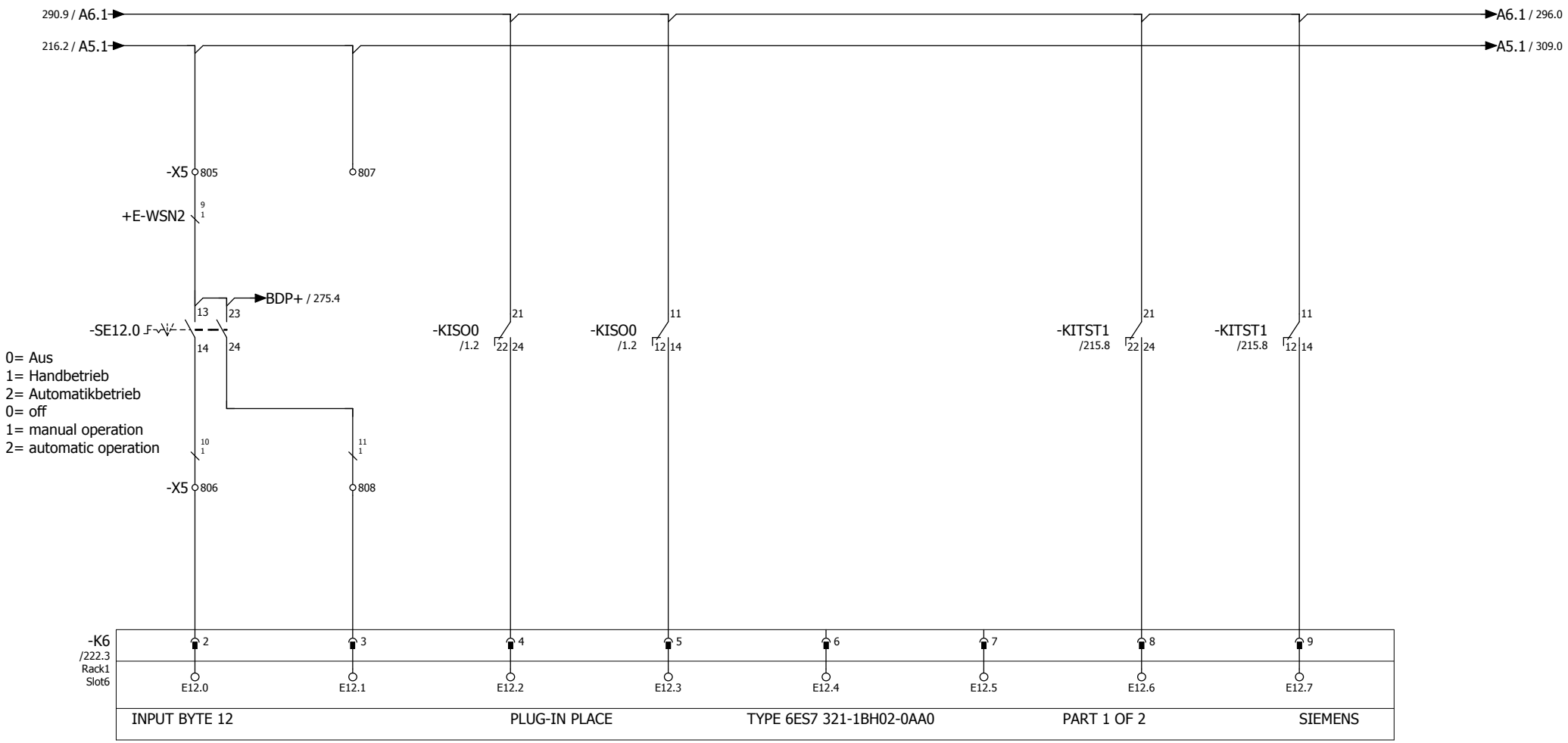

Schlüsselschalter Betriebsart Hand	Schlüsselschalter Betriebsart Automatik	Isolationswächter 400V Vorwarnung	Isolationswächter 400V Alarm	Reserve	Reserve	Isolationswächter 24V DC Netzteil 1 Vorwarnung	Isolationswächter 24V DC Netzteil 1 Alarm
				reserve	reserve		
key switch operation mode manual	key switch operation mode automatic	insulation monitor 400V pre-warning	insulation monitor 400V alarm			insulation monitor 24V DC Power supply unit 1 pre-warning	insulation monitor 24V DC Power supply unit 1 alarm

Duferco Clabecq

Management codes				Document identification				
5.3.0.0	CE	000	DW	QTPC	L04	ROSL	D	0049
System	Phase	Area	Typology	Project	Lot	Company	D/S	Number

Rev.	Date	Description	Prepared	Checked	Approved			
						Date	30.01.2012	
						Dus		
							in place of	Replaced by

Duferco (SBM 2) Schaltschrank

RÖSLER finding a better way ...

Control EB 12

= ES
+ S

01-130070 00

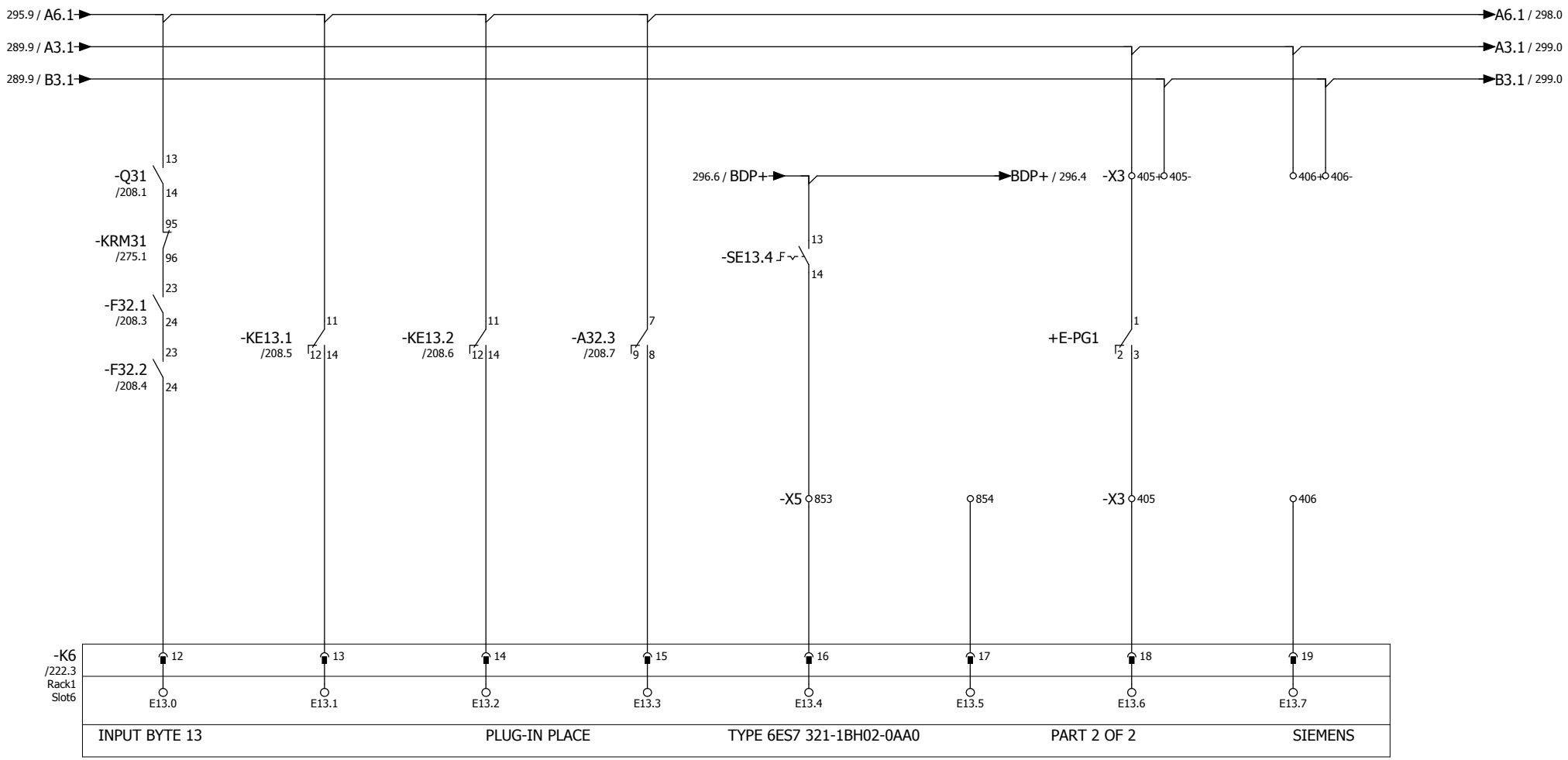

Motorschutz Vorwärmer motor ptot. preheater	Störung Brenner fault burner	Brenner Ein burner on	Sicherheitsthermostat Vorwärmer Safety temperature limiter preheater	Wahlschalter Vorwärmer ein selector switch preheater on	Reserve reserve	Zähler Gas Verbrauch Counter gas consumption	Reserve reserve

Duferco Clabecq

Management codes				Document identification				
5.3.0.0	CE	000	DW	QTPC	L04	ROSL	D	0049
System	Phase	Area	Typology	Project	Lot	Company	D/S	Number

Rev.	Date	Description	Prepared	Checked	Approved			
						Date	30.01.2012	
						Dus		
							Duferco (SBM 2) Schaltschrank	
							in place of	Replaced by

RÖSLER finding a better way ...

Control EB 13

= ES
+ S

01-130070 00

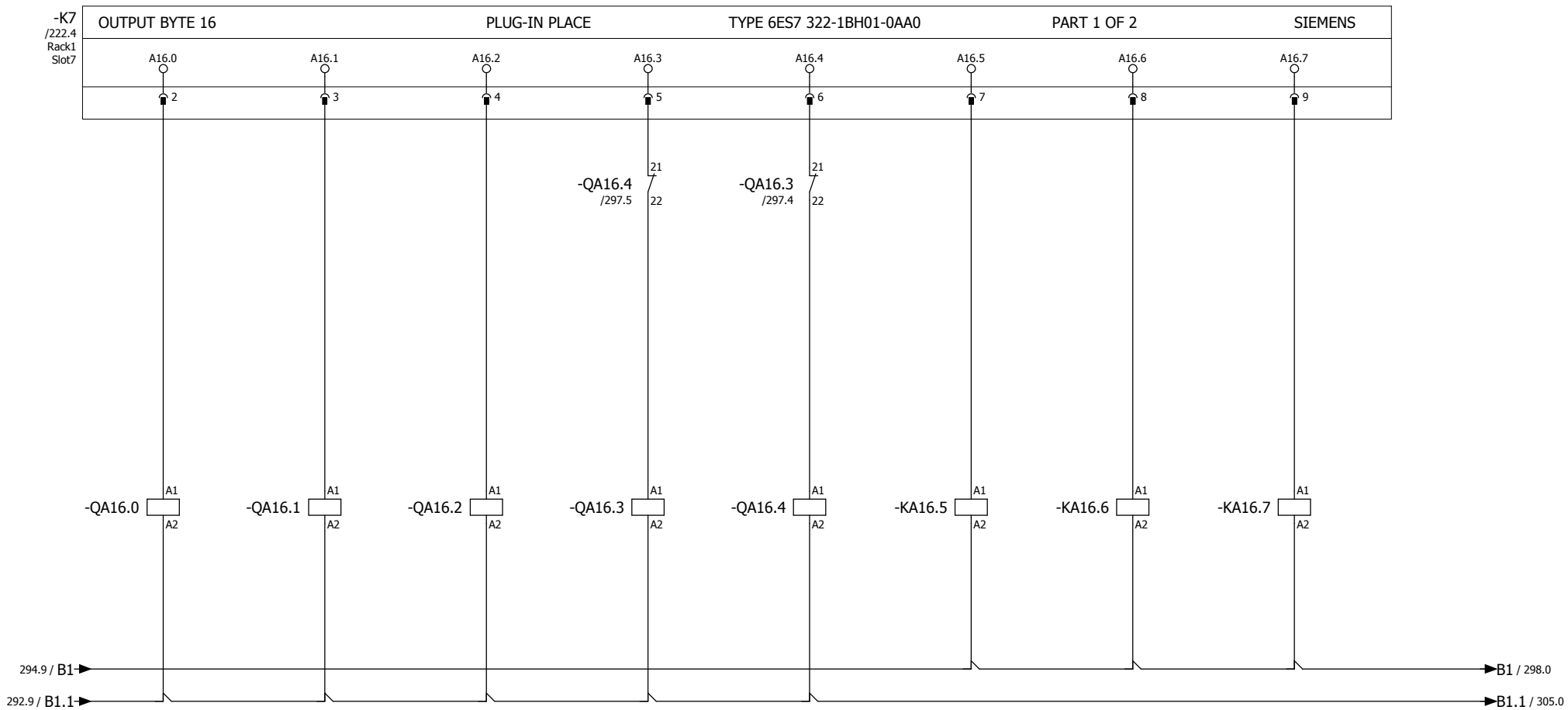

Ventilator 1 Reinigungsstation ventilator 1 cleaning station	Ventilator 2 Reinigungsstation ventilator 2 cleaning station	Motor Bürste + Förderschnecke Motor brush + screw conveyor	Bürste Heben brush lifting	Bürste Senken brush sinking	Bremse Höhenverstellung Bürste Brake height adjustment brush	Türverriegelung Schutzgitter Bereich 1 door lock safety fence range 1	Reserve reserve
1 2 /199.1	1 2 /199.3	1 2 /199.4	1 2 /199.6	1 2 /199.7	13 14 /199.8	14 11 /277.1	14 11
3 4 /199.1	3 4 /199.3	3 4 /199.4	3 4 /199.6	3 4 /199.7	23 24 /199.9	12	12
5 6 /199.1	5 6 /199.3	5 6 /199.5	5 6 /199.6	5 6 /199.7	33 34		
		13 14 /274.6	13 14	13 14	43 44		
		21 22	21 22 /297.5	21 22 /297.4			
		33 34	31 32	31 32			
		43 44	43 44	43 44			
			53 54	53 54			

Duferco Clabecq

Management codes				Document identification				
5.3.0.0	CE	000	DW	QTPC	L04	ROSL	D	0049
System	Phase	Area	Typology	Project	Lot	Company	D/S	Number

Rev.	Date	Description	Prepared	Checked	Approved			
						Date	30.01.2012	
						Dus		
							Duferco (SBM 2) Schaltschrank	
							in place of	Replaced by

RÖSLER finding a better way ...

Control AB
16

= ES
+ S

01-130070 00

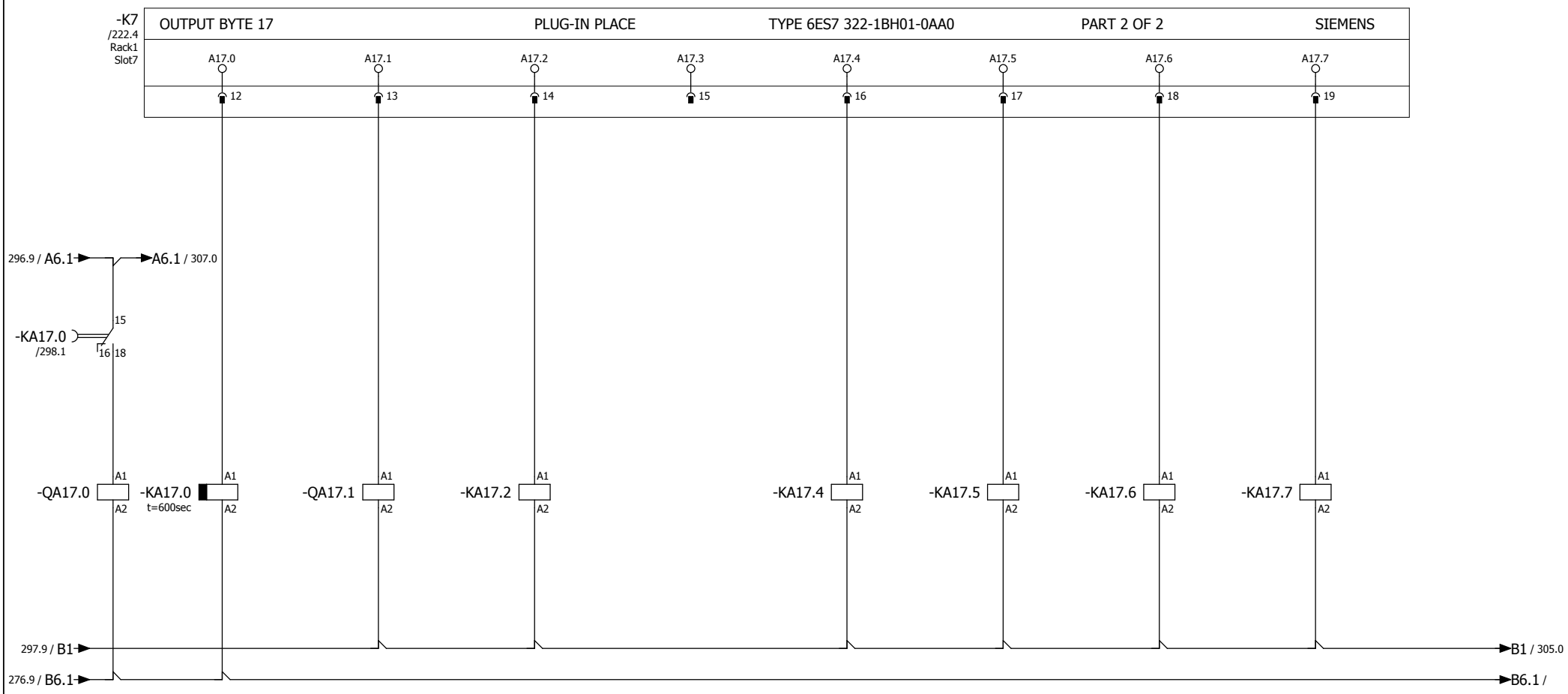

Ventilator Vorwärmer ventilator preheater	Zuleitung Brenner input lead burner	Brenner Ein burner on	Reserve reserve	Rücksetzen Sicherheitsthermostat Vorwärmer reset Safety temperature limiter preheater	Hauptventil Gas main valve gas	Türverriegelung Schutzgitter Bereich 3 door lock safety fence range 3	Türverriegelung Schutzgitter Bereich 4 door lock safety fence range 4
1 – 2 /208.1 3 – 4 /208.1 5 – 6 /208.1	18 – 15 /298.0 16 –	1 – 2 /208.4 3 – 4 5 – 6 13 – 14	14 – 11 /208.5 12 –	14 – 11 /208.9 12 –	14 – 11 /275.2 12 –	14 – 11 /278.1 12 –	14 – 11 /279.1 12 –

Duferco Clabecq

Management codes				Document identification				
5.3.0.0	CE	000	DW	QTPC	L04	ROSL	D	0049
System	Phase	Area	Typology	Project	Lot	Company	D/S	Number

297 299

Rev.	Date	Description	Prepared	Checked	Approved	Date 30.01.2012	Duferco (SBM 2) Schaltschrank	RÖSLER finding a better way ...	Control AB 17	= ES	Page 298
						Dus				+ S	
							in place of	Replaced by		01-130070 00	from 565

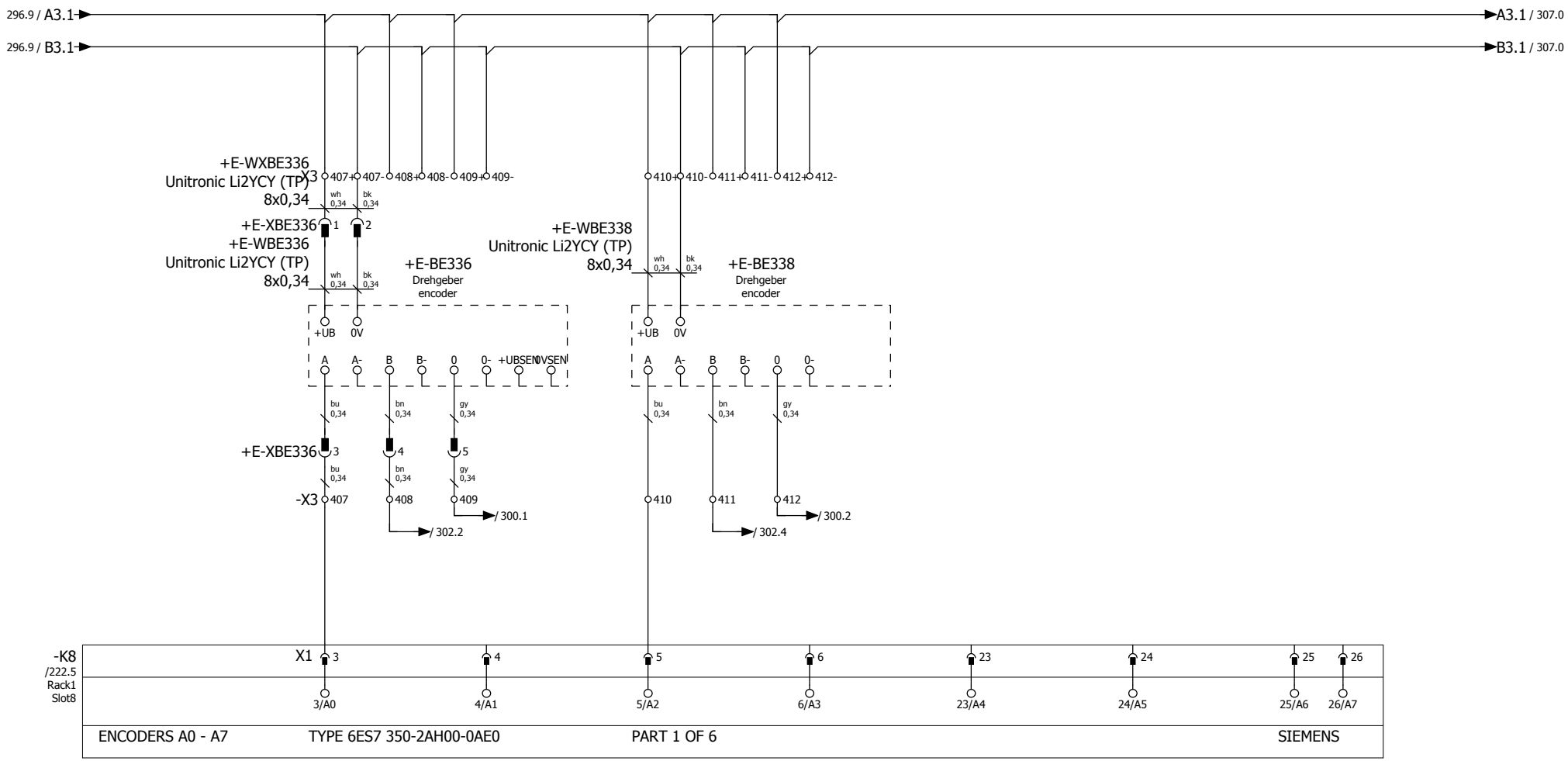

Geschwindigkeit
Rollenbahn
Strahlanlage
Zähler

speed roll conveyor
blasting
system Counter

Geschwindigkeit
Rollenbahn
Einlauf
Zähler

speed roll conveyor
inlet
Counter

Duferco Clabecq

Management codes				Document identification				
5.3.0.0	CE	000	DW	QTPC	L04	ROSL	D	0049
System	Phase	Area	Typology	Project	Lot	Company	D/S	Number

298 300

						Date	30.01.2012	
						Dus		
Rev.	Date	Description	Prepared	Checked	Approved			

Duferco (SBM 2) Schaltschrank
in place of | Replaced by

RÖSLER finding a better way ...

Control FM350-2

= ES
+ S

01-130070 00

Page 299
from 565

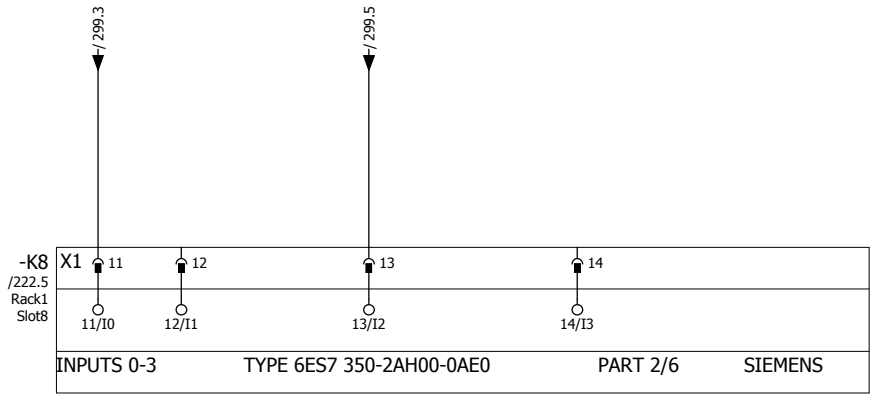

Geschwindigkeit Rollenbahn Strahlanlage Tor	Geschwindigkeit Rollenbahn Einlauf Tor
speed roll conveyor blasting system gate	speed roll conveyor inlet gate

-K8
/222.5
Rack1
Slot8

OUTPUTS 0-3 TYPE 6ES7 350-2AH00-0AE0 PART 3/6 SIEMENS

	15/Q0	16/Q1	17/Q2	18/Q3	19/P8V2 20/P8V2
X1	15	16	17	18	19 19/P8V2 20 20/P8V2

300

Duferco Clabecq

Management codes				Document identification				
5.3.0.0	CE	000	DW	QTPC	L04	ROSL	D	0049
System	Phase	Area	Typology	Project	Lot	Company	D/S	Number

302

						Date	30.01.2012	
						Dus		
Rev.	Date	Description	Prepared	Checked	Approved		in place of	Replaced by

Duferco (SBM 2) Schaltschrank

RÖSLER finding a better way ...

Control FM350-2

= ES
+ S

01-130070 00

Page 301
from 565

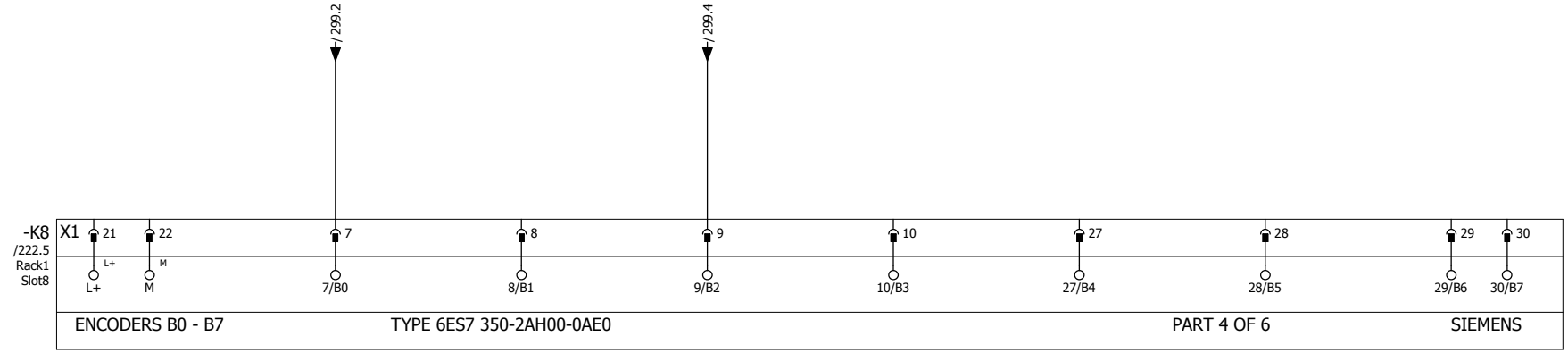

Geschwindigkeit
Rollenbahn
Strahlanlage
Richtung

speed roll conveyor
blasting
system
direction

Geschwindigkeit
Rollenbahn
Einlauf
Richtung

speed roll conveyor
inlet
direction

-K8
/222.5
Rack1
Slot8

X1	31	32	33	34
	31/I4	32/I5	33/I6	34/I7

INPUTS 4-7 TYPE 6ES7 350-2AH00-0AE0 PART 5/6 SIEMENS

-K8
/222.5
Rack1
Slot8

OUTPUTS 4-7	TYPE 6ES7 350-2AH00-0AE0	PART 6/6	SIEMENS

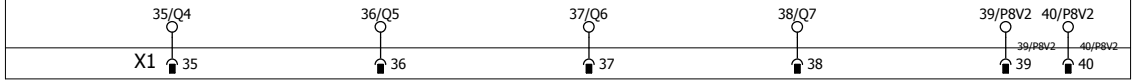

Duferco Clabecq

Management codes				Document identification				
5.3.0.0	CE	000	DW	QTPC	L04	ROSL	D	0049
System	Phase	Area	Typology	Project	Lot	Company	D/S	Number

Rev.	Date	Description	Prepared	Checked	Approved			
						Date	30.01.2012	
						Dus		
							Duferco (SBM 2) Schaltschrank	
							in place of	Replaced by

RÖSLER finding a better way ...

Control FM350-2

= ES
+ S

01-130070 00

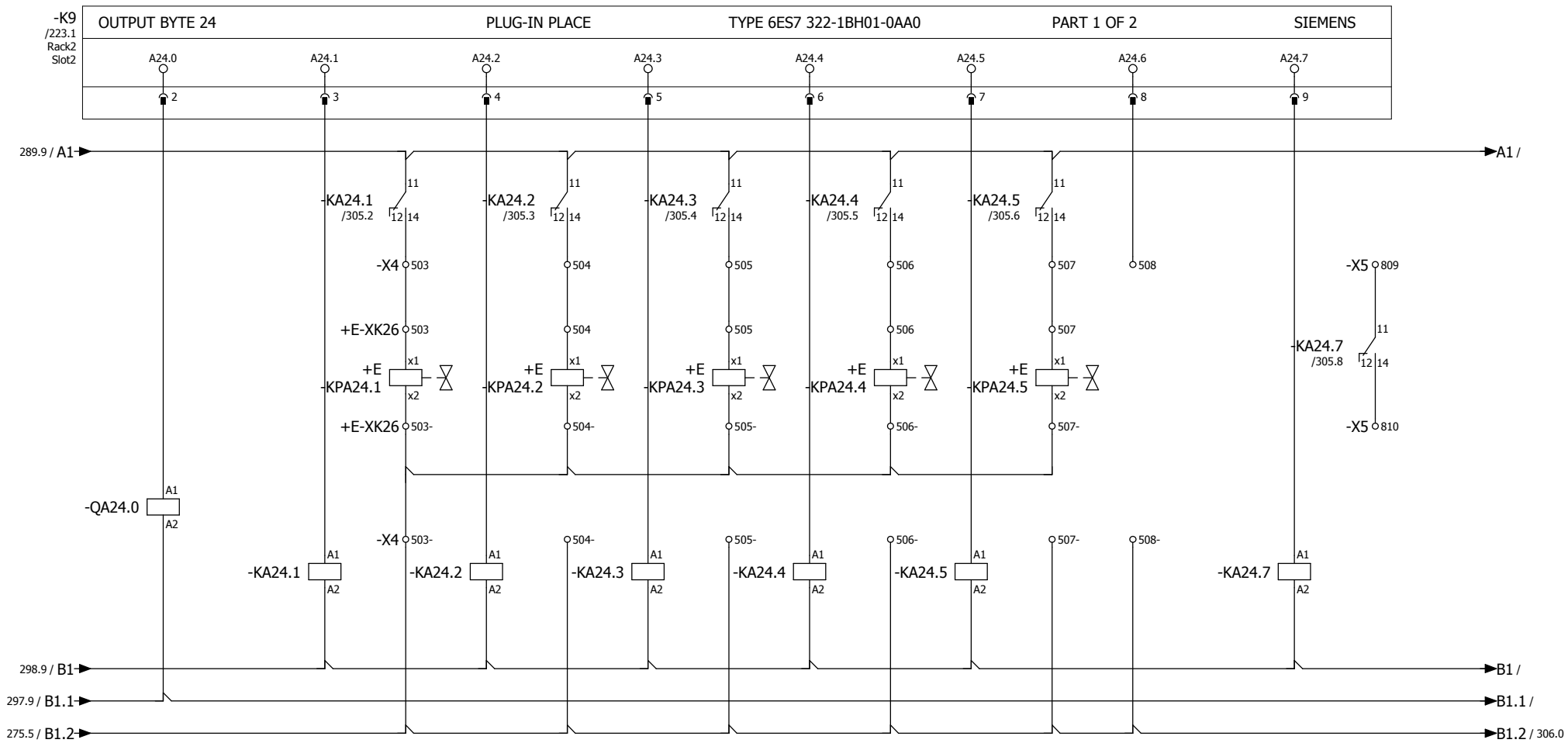

Hydraulikaggregat hydraulic aggregate	Hydraulik Hauptventil hydraulic main valve	Hydraulik Rolle Vorwärts hydraulic roll forward	Hydraulik Rolle Rückwärts hydraulic roll backward	Hydraulik Schwenkrolle heben hydraulic tilting roll lifting	Hydraulik Schwenkrolle senken hydraulic tilting roll sinking	Reserve reserve	Reserve reserve
1 – 2 /209.1 3 – 4 /209.1 5 – 6 /209.1 13 – 14	14 – 11 /305.2 12	14 – 11 /305.3 12	14 – 11 /305.4 12	14 – 11 /305.5 12	14 – 11 /305.6 12		14 – 11 /305.8 12

Duferco Clabecq

Management codes				Document identification				
5.3.0.0	CE	000	DW	QTPC	L04	ROSL	D	0049
System	Phase	Area	Typology	Project	Lot	Company	D/S	Number

Rev.	Date	Description	Prepared	Checked	Approved			
						Date	30.01.2012	
						Dus		
						in place of		Replaced by

Duferco (SBM 2) Schaltschrank

RÖSLER finding a better way ...

Control AB
24

= ES
+ S

01-130070 00

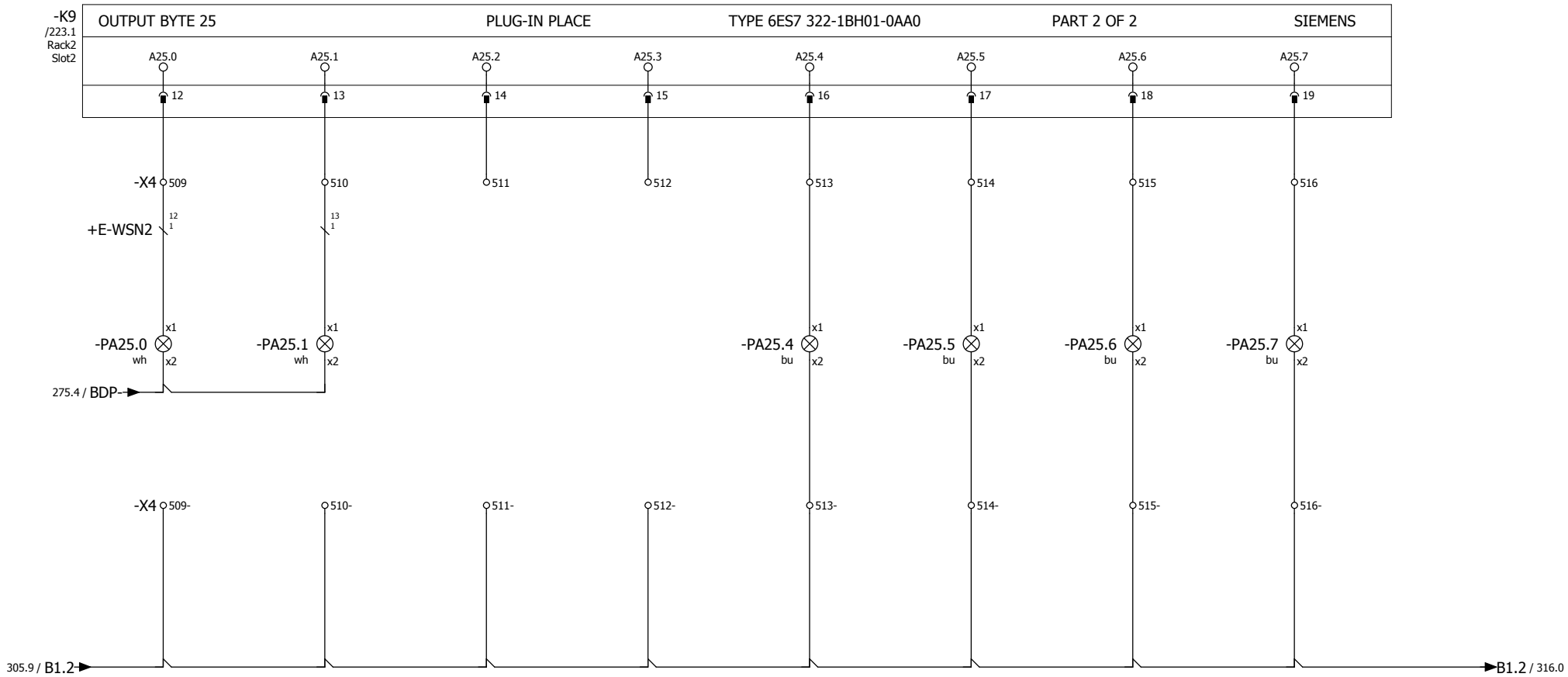

Leuchtmelder Betriebsart Hand Indicator light operation mode manual	Leuchtmelder Betriebsart Automatik Indicator light operation mode automatic	Reserve reserve	Reserve reserve	Leuchtmelder Türverriegelung Tür 1 Schutzgitter Einlauf SBM2 Indicator light door lock door 1 safety fence inlet SBM2	Leuchtmelder Türverriegelung Tür 2 Schutzgitter Einlauf SBM2 Indicator light door lock door 2 safety fence inlet SBM2	Leuchtmelder Türverriegelung Tür 1 Schutzgitter Auslauf SBM2 Indicator light door lock door 1 safety fence outlet SBM2	Leuchtmelder Türverriegelung Tür 2 Schutzgitter Auslauf SBM2 Indicator light door lock door 2 safety fence outlet SBM2

Duferco Clabecq

Management codes				Document identification				
5.3.0.0	CE	000	DW	QTPC	L04	ROSL	D	0049
System	Phase	Area	Typology	Project	Lot	Company	D/S	Number

Rev.	Date	Description	Prepared	Checked	Approved			
						Date	30.01.2012	
						Dus		
							Duferco (SBM 2) Schaltschrank	
							in place of	Replaced by

RÖSLER finding a better way ...

Control AB
25

= ES
+ S

01-130070 00

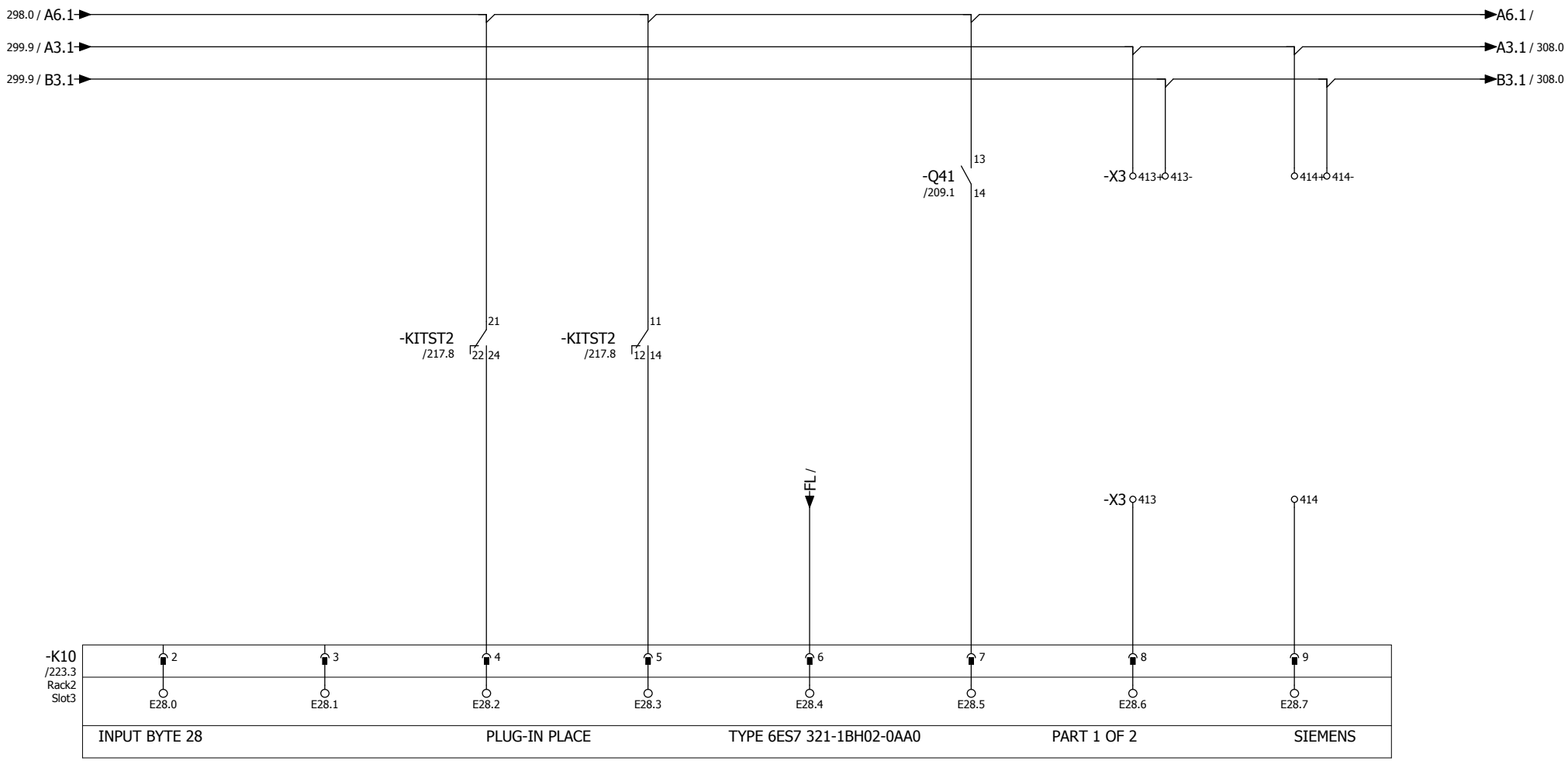

Reserve reserve	Reserve reserve	Isolationswächter 24V DC Netzteil 2 Vorwarnung insulation monitor 24V DC Power supply unit 2 pre-warning	Isolationswächter 24V DC Netzteil 2 Alarm insulation monitor 24V DC Power supply unit 2 alarm	FL-Switch Betriebsbereit FL-Switch ready for operation	Motorschutz Hydraulikaggregat motor prot. hydraulic aggregate	Reserve reserve	Reserve reserve

Duferco Clabecq

Management codes				Document identification				
5.3.0.0	CE	000	DW	QTPC	L04	ROSL	D	0049
System	Phase	Area	Typology	Project	Lot	Company	D/S	Number

Rev.	Date	Description	Prepared	Checked	Approved	Date 27.01.2012 Dus	Duferco (SBM 2) Schaltschrank in place of	Replaced by

RÖSLER finding a better way ...

Control EB
28

= ES
+ S

01-130070 00

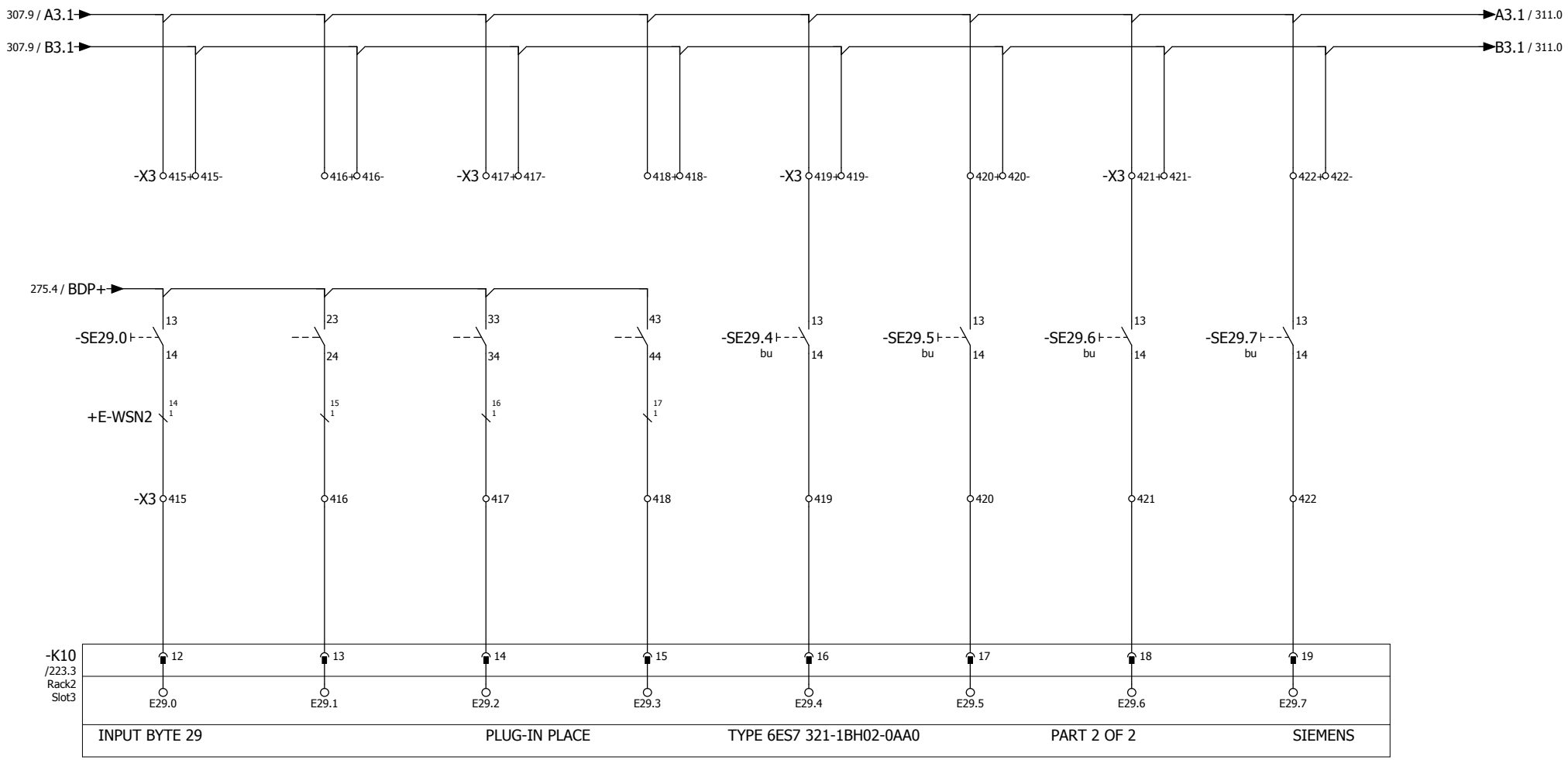

Funktion heben function lifting	Funktion senken function sinking	Funktion vorwärts function forward	Funktion rückwärts function backward	Drucktaster Türverriegelung Tür 1 Schutzgitter Einlauf SBM2 schließen / öffnen Pushbutton door lock door 1 safety fence inlet SBM2 close / open	Drucktaster Türverriegelung Tür 2 Schutzgitter Einlauf SBM2 schließen / öffnen Pushbutton door lock door 2 safety fence inlet SBM2 close / open	Drucktaster Türverriegelung Tür 1 Schutzgitter Auslauf SBM2 schließen / öffnen Pushbutton door lock door 1 safety fence outlet SBM2 close / open	Drucktaster Türverriegelung Tür 2 Schutzgitter Auslauf SBM2 schließen / öffnen Pushbutton door lock door 2 safety fence outlet SBM2 close / open

Duferco Clabecq

Management codes				Document identification				
5.3.0.0	CE	000	DW	QTPC	L04	ROSL	D	0049
System	Phase	Area	Typology	Project	Lot	Company	D/S	Number

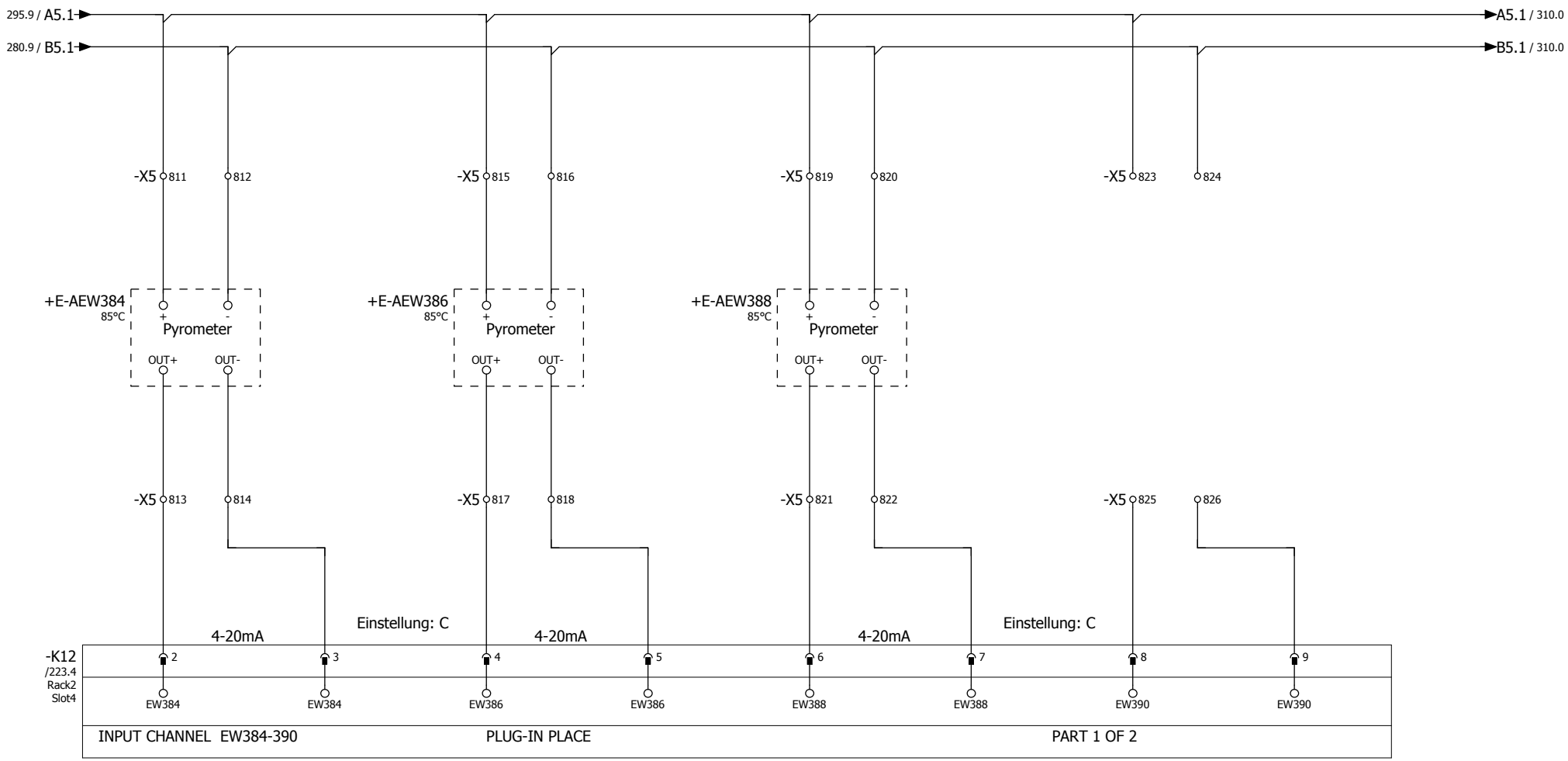

Temperatur Vorwärmer Anfang temperature preheater start	Temperatur Vorwärmer Anfang temperature preheater start	Temperatur Vorwärmer Anfang temperature preheater start

Reserve

reserve

Duferco Clabecq

Management codes				Document identification				
5.3.0.0	CE	000	DW	QTPC	L04	ROSL	D	0049
System	Phase	Area	Typology	Project	Lot	Company	D/S	Number

Rev.	Date	Description	Prepared	Checked	Approved			
						Date	30.01.2012	
						Dus		
							Duferco (SBM 2) Schaltschrank	
							in place of	Replaced by

RÖSLER finding a better way ...

Control EW
384-390

= ES
+ S

01-130070 00

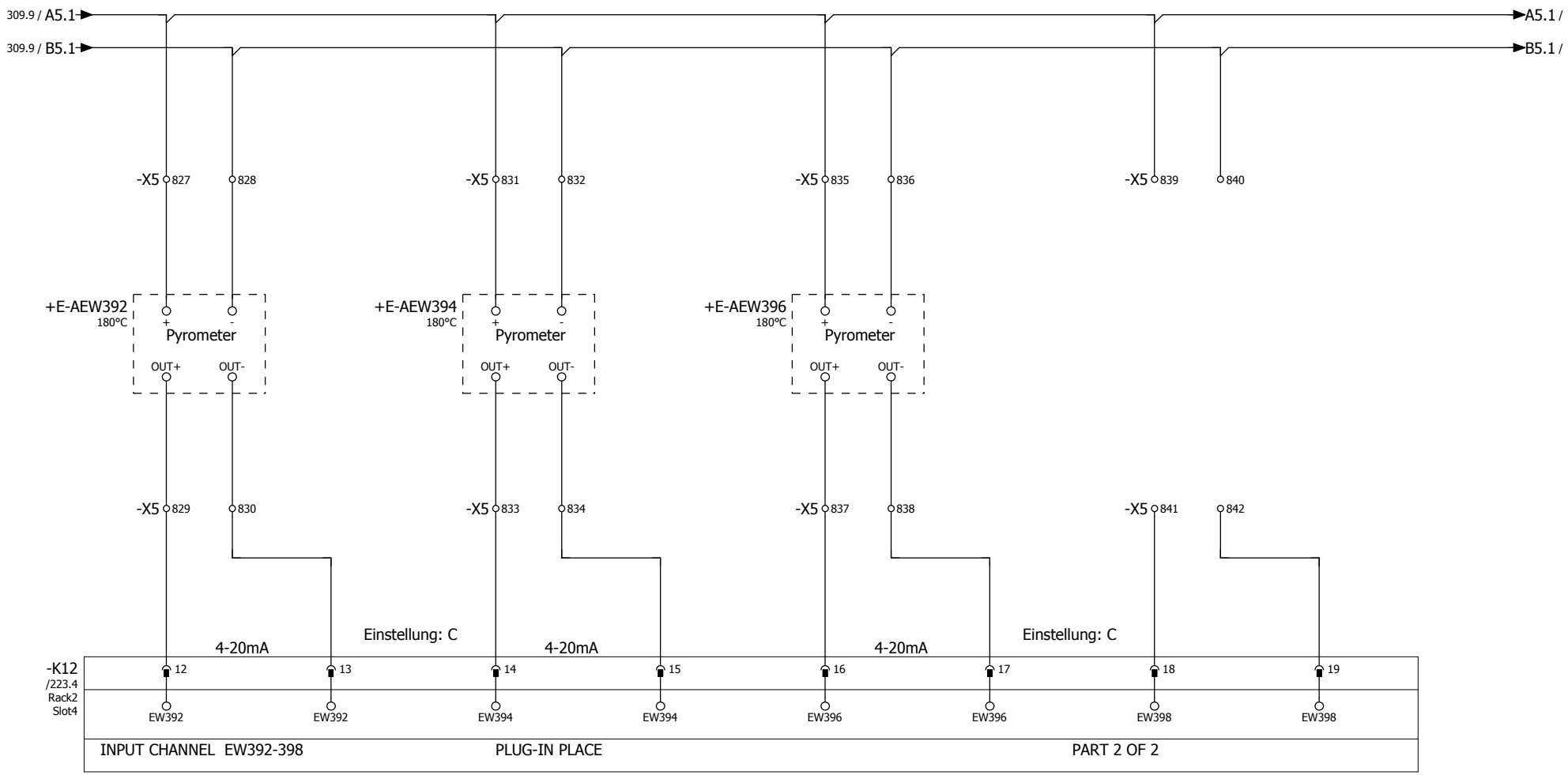

Temperatur Vorwärmer Ende temperature preheater end	Temperatur Vorwärmer Ende temperature preheater end	Temperatur Vorwärmer Ende temperature preheater end

Reserve

reserve

Duferco Clabecq

Management codes				Document identification				
5.3.0.0	CE	000	DW	QTPC	L04	ROSL	D	0049
System	Phase	Area	Typology	Project	Lot	Company	D/S	Number

309 311

						Date	30.01.2012	Duferco (SBM 2) Schaltschrank
						Dus		
Rev.	Date	Description	Prepared	Checked	Approved			in place of / Replaced by

RÖSLER finding a better way ...

Control EW 392-398

= ES
+ S

01-130070 00

Page 310 from 565

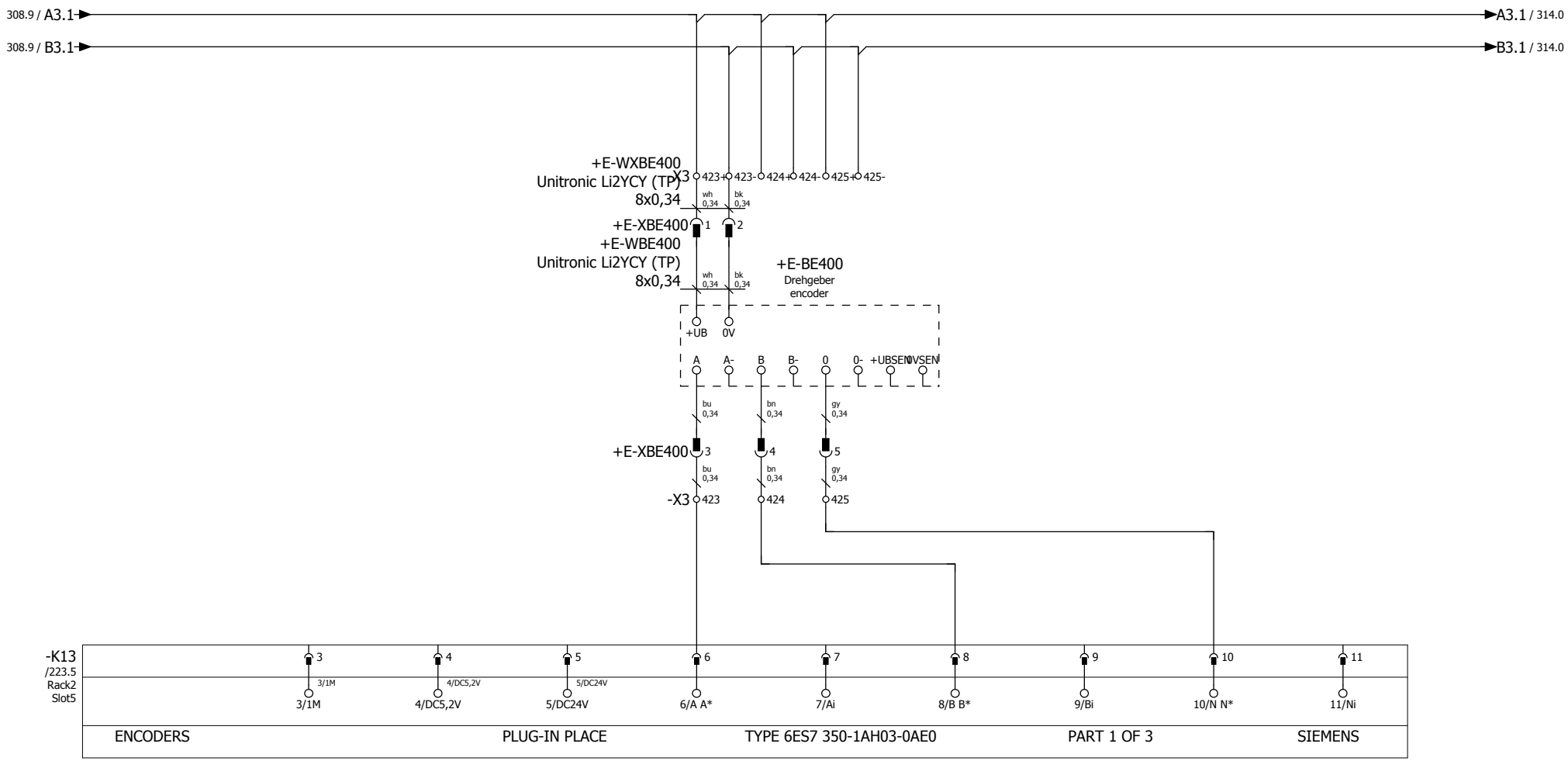

FUNCTION	1ME	DC5,2V	DC24V	AA*	A inverse	BB*	B inverse	NN*	N inverse
5V encoder RS 422 symmetric	encoder supply ground	5,2V encoder supply	24V encoder supply	encod. signal A	encod.signal Ai	encod. signal B	encod.signal Bi	encod. signal N	encod.signal Ni
24V encoder asymmetric				encoder signal A*	---	encod.signal B*	---	encod.signal N*	---
24V pulse generator						direction signal		---	
24V initiator						---			
				Höhenverstellung Reinigungsstation Zähler height adjustment cleaning station Counter		Höhenverstellung Reinigungsstation Tor height adjustment cleaning station gate		Höhenverstellung Reinigungsstation Richtung height adjustment cleaning station direction	

Duferco Labecq

Management codes				Document identification				
5.3.0.0	CE	000	DW	QTPC	L04	ROSL	D	0049
System	Phase	Area	Typology	Project	Lot	Company	D/S	Number

Rev.	Date	Description	Prepared	Checked	Approved			
						Date	30.01.2012	
						Dus		

Duferco (SBM 2) Schaltschrank

in place of | Replaced by

RÖSLER finding a better way ...

Control FM350-1 (2)

= ES
+ S

01-130070 00

Page 311
from 565

-K13
/223.5
Rack2
Slot5

	X1 13	14	15
	13/I0	14/I1	15/I2
INPUTS I0/I1/I2	TYPE 6ES7 350-1AH03-0AE0	PART 2 OF 3	SIEMENS

Reserve	Reserve	Reserve
reserve	reserve	reserve

0	1	2	3	4	5	6	7	8	9

-K13
/223.5
Rack2
Slot5

OUTPUTS Q0/Q1	TYPE 6ES7 350-1AH03-0AE0	PART 3 OF 3	SIEMENS
	17/Q0	18/Q1	19/2L+ 20/2M
	X1 17	18	19/2L+ 19 20/2M 20

Reserve Reserve

reserve reserve

Duferco Clabecq

Management codes				Document identification				
5.3.0.0	CE	000	DW	QTPC	L04	ROSL	D	0049
System	Phase	Area	Typology	Project	Lot	Company	D/S	Number

312 314

						Date 30.01.2012		
						Dus		
Rev.	Date	Description	Prepared	Checked	Approved		Duferco (SBM 2) Schaltschrank	
							in place of	Replaced by

RÖSLER finding a better way ...

Control FM350-1 (2)

= ES
+ S

01-130070 00

Page 313
from 565

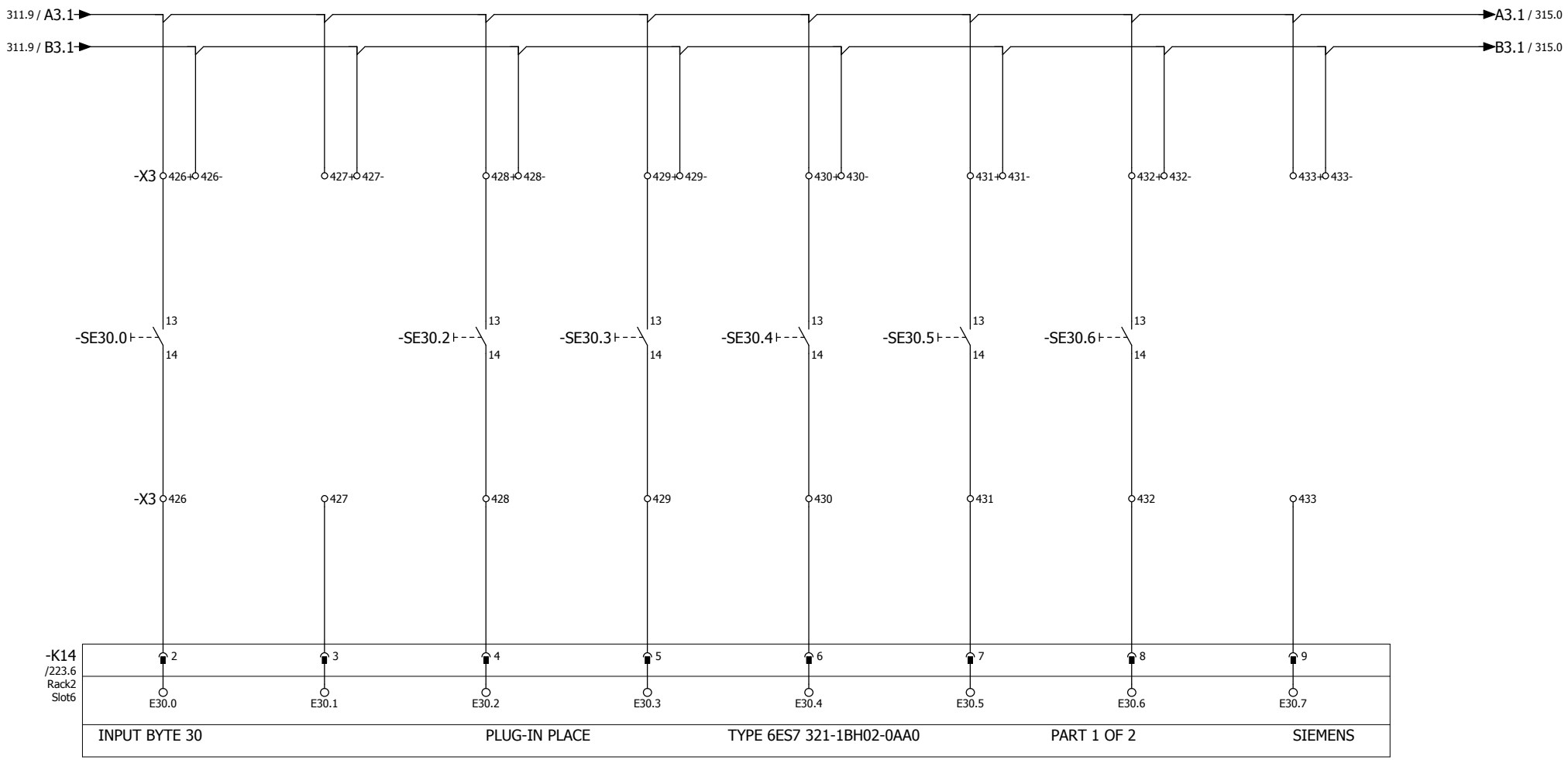

Drucktaster Türverriegelung Tür 1 Schutzgitter Einlauf Duferco schließen / öffnen Pushbutton door lock door 1 safety fence inlet Duferco close / open	Reserve reserve	Drucktaster Türverriegelung Tür 3 Schutzgitter Einlauf Duferco schließen / öffnen Pushbutton door lock door 3 safety fence inlet Duferco close / open	Drucktaster Türverriegelung Tür 4 Schutzgitter Einlauf Duferco schließen / öffnen Pushbutton door lock door 4 safety fence inlet Duferco close / open	Drucktaster Türverriegelung Tür 1 Schutzgitter Auslauf Duferco schließen / öffnen Pushbutton door lock door 1 safety fence outlet Duferco close / open	Drucktaster Türverriegelung Tür 2 Schutzgitter Auslauf Duferco schließen / öffnen Pushbutton door lock door 2 safety fence outlet Duferco close / open	Drucktaster Türverriegelung Tür 3 Schutzgitter Auslauf Duferco schließen / öffnen Pushbutton door lock door 3 safety fence outlet Duferco close / open	Reserve reserve

Duferco Clabecq

Management codes				Document identification				
5.3.0.0	CE	000	DW	QTPC	L04	ROSL	D	0049
System	Phase	Area	Typology	Project	Lot	Company	D/S	Number

Rev.	Date	Description	Prepared	Checked	Approved			
						Date	30.01.2012	
						Dus		
							in place of	Replaced by

Duferco (SBM 2) Schaltschrank

RÖSLER finding a better way ...

Control EB 30

= ES
+ S

01-130070 00

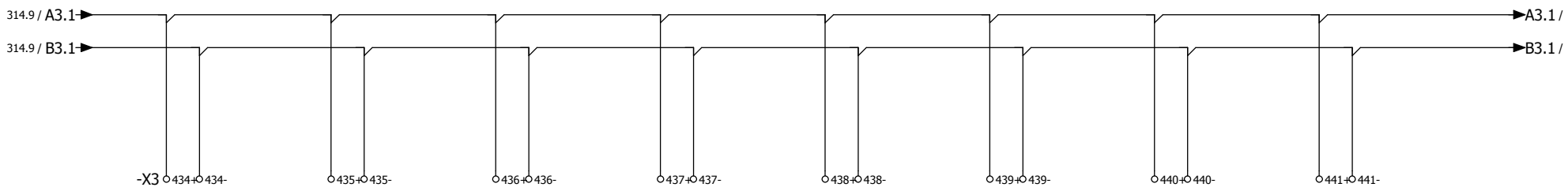

Reserve	Reserve	Reserve	Reserve	Reserve	Reserve	Reserve	Reserve
reserve	reserve	reserve	reserve	reserve	reserve	reserve	reserve

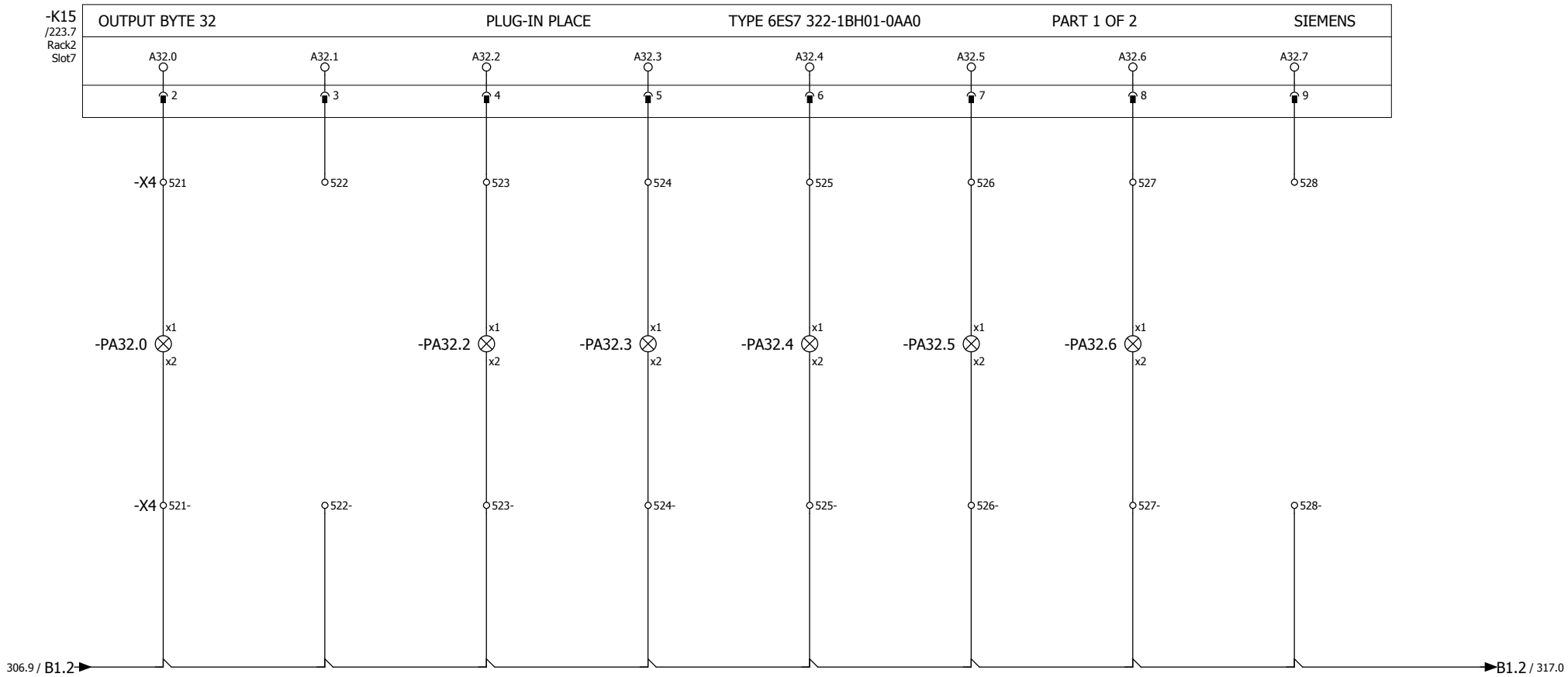

Leuchtmelder Türverriegelung Tür 1 Schutzgitter Einlauf Duferco	Reserve reserve	Leuchtmelder Türverriegelung Tür 3 Schutzgitter Einlauf Duferco	Leuchtmelder Türverriegelung Tür 4 Schutzgitter Einlauf Duferco	Leuchtmelder Türverriegelung Tür 1 Schutzgitter Auslauf Duferco	Leuchtmelder Türverriegelung Tür 2 Schutzgitter Auslauf Duferco	Leuchtmelder Türverriegelung Tür 3 Schutzgitter Auslauf Duferco	Reserve reserve
Indicator light door lock door 1 safety fence inlet Duferco		Indicator light door lock door 3 safety fence inlet Duferco	Indicator light door lock door 4 safety fence inlet Duferco	Indicator light door lock door 1 safety fence outlet Duferco	Indicator light door lock door 2 safety fence outlet Duferco	Indicator light door lock door 3 safety fence outlet Duferco	

Duferco Clabecq

Management codes				Document identification				
5.3.0.0	CE	000	DW	QTPC	L04	ROSL	D	0049
System	Phase	Area	Typology	Project	Lot	Company	D/S	Number

Rev.	Date	Description	Prepared	Checked	Approved			
						Date	30.01.2012	
						Dus		
							Duferco (SBM 2) Schaltschrank	
							in place of	Replaced by

RÖSLER finding a better way ...

Control AB
32

= ES
+ S

01-130070 00

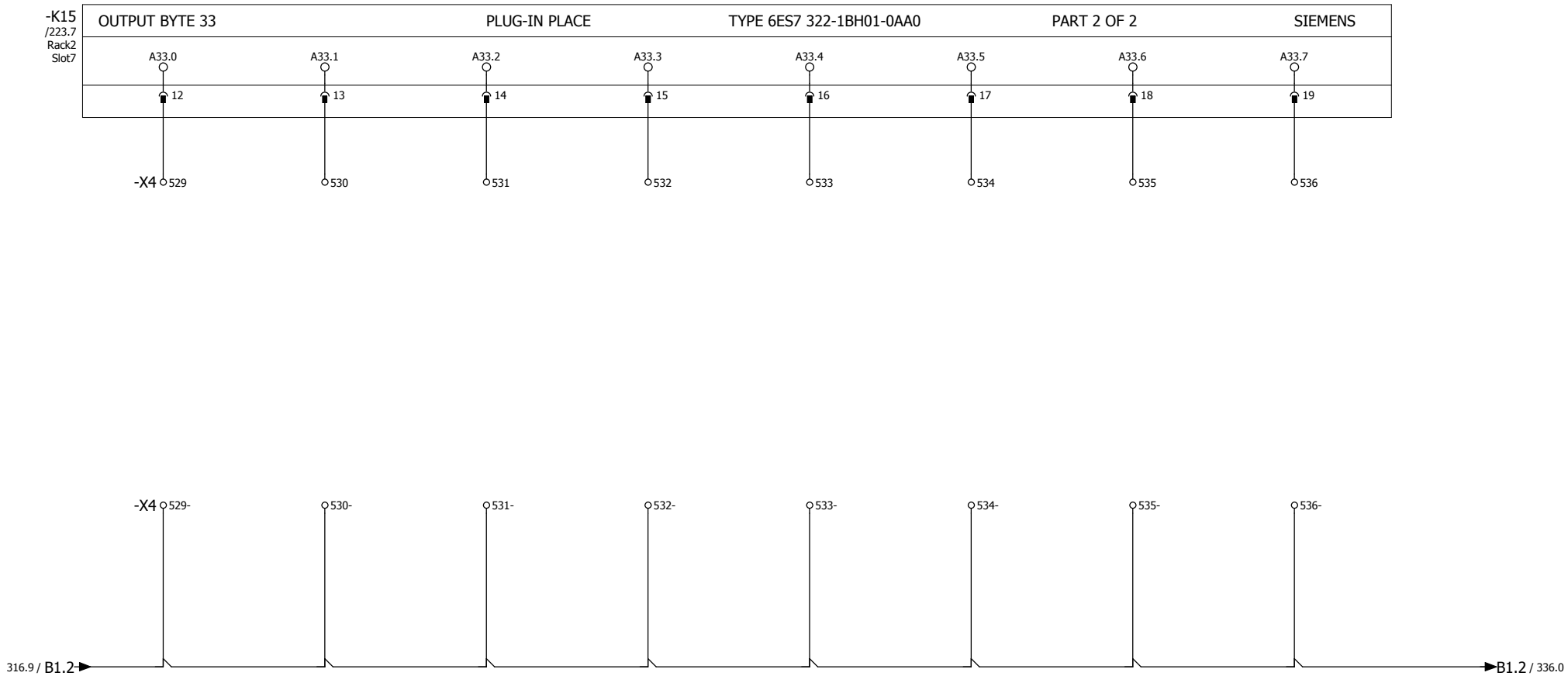

Reserve	Reserve	Reserve	Reserve	Reserve	Reserve	Reserve	Reserve
reserve	reserve	reserve	reserve	reserve	reserve	reserve	reserve

Duferco Clabecq

Management codes				Document identification				
5.3.0.0	CE	000	DW	QTPC	L04	ROSL	D	0049
System	Phase	Area	Typology	Project	Lot	Company	D/S	Number

Rev.	Date	Description	Prepared	Checked	Approved	Date 30.01.2012	Duferco (SBM 2) Schaltschrank	RÖSLER finding a better way ...	Control AB 33	= ES	01-130070 00	Page 317
						Dus				+ S		from 565
							in place of	Replaced by				

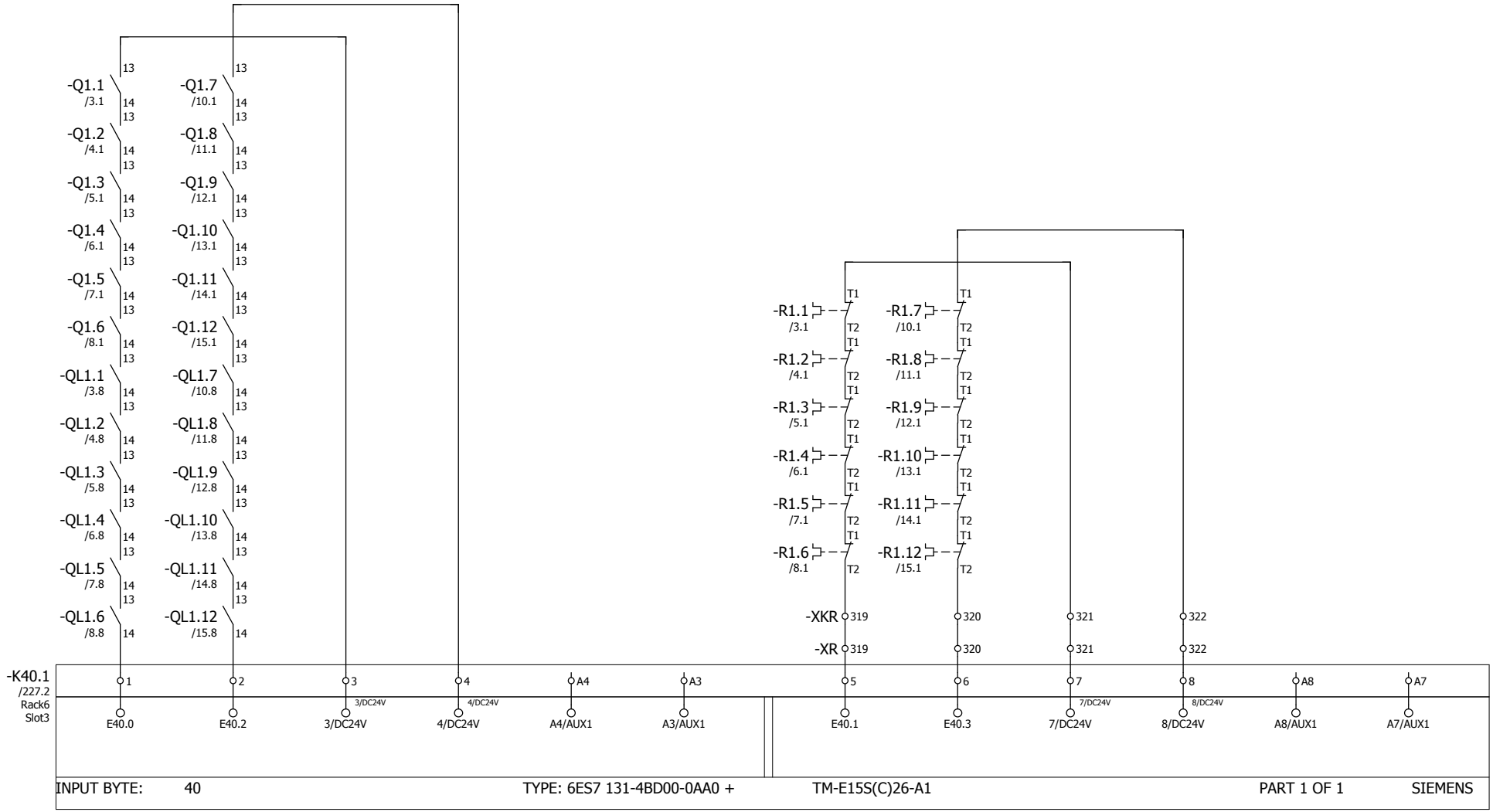

Motorschutz Rollenbahn Einlauf M1 - M6

motor prot. roll conveyor inlet M1 - M6

Motorschutz Rollenbahn Einlauf M7 - M12

motor prot. roll conveyor inlet M7 - M12

Bremswiderstand Rollenbahn Einlauf M1 - M6

brake resistor roll conveyor inlet M1 - M6

Bremswiderstand Rollenbahn Einlauf M7 - M12

brake resistor roll conveyor inlet M7 - M12

Duferco Clabecq

Management codes				Document identification				
5.3.0.0	CE	000	DW	QTPC	L04	ROSL	D	0049
System	Phase	Area	Typology	Project	Lot	Company	D/S	Number

Rev.	Date	Description	Prepared	Checked	Approved	Date 30.01.2012 Dus	Duferco (SBM 2) Schaltschrank	
							in place of	Replaced by

RÖSLER finding a better way ...

Control
EB 40 ET 200S SA2

= ES
+ S

01-130070 00

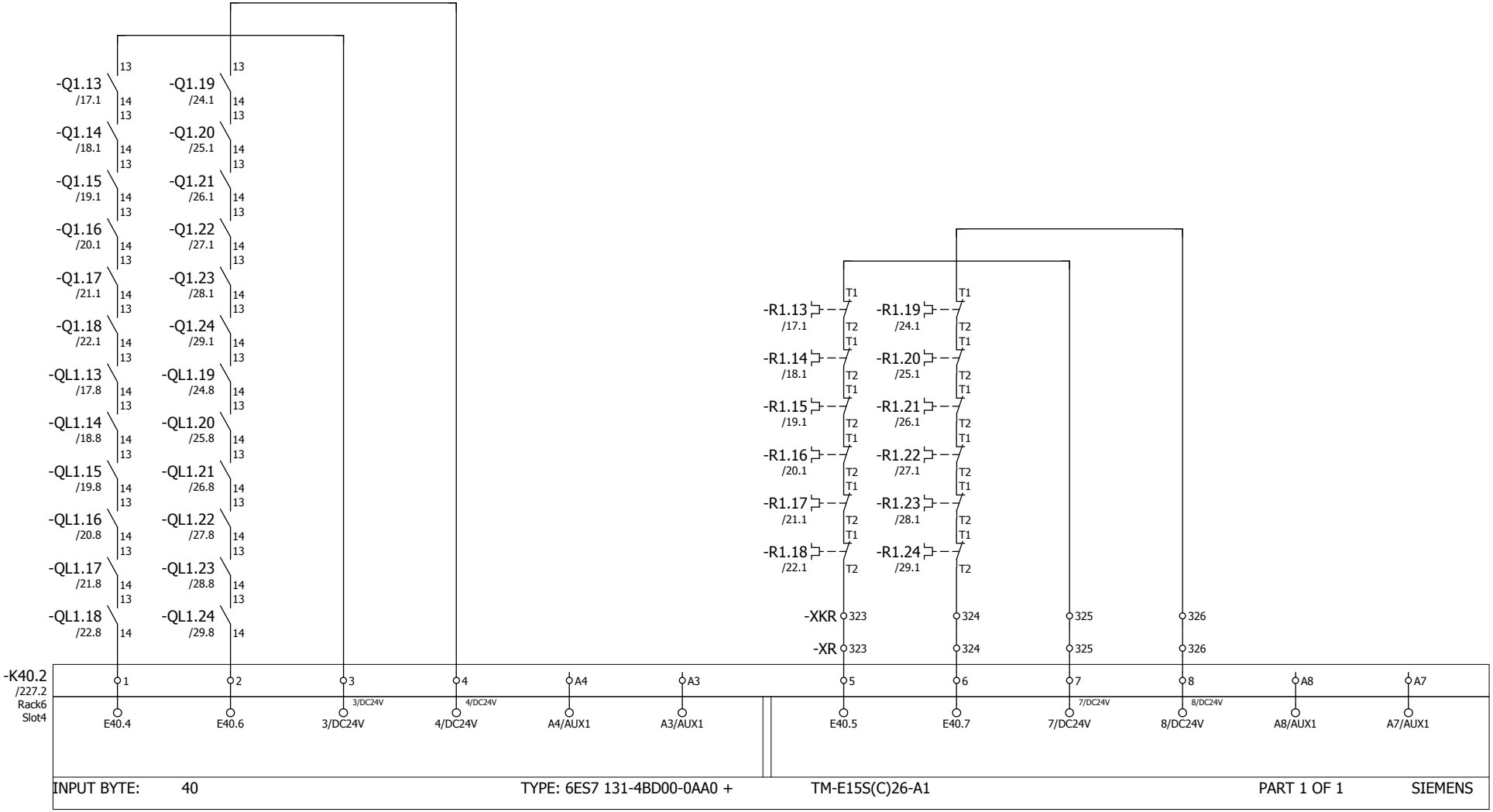

Motorschutz
Rollenbahn
Einlauf M13 - M18

motor prot.
roll conveyor
inlet M13 - M18

Motorschutz
Rollenbahn
Einlauf M19 - M24

motor prot.
roll conveyor
inlet M19 - M24

Bremswiderstand
Rollenbahn
Einlauf M13 - M18

brake resistor
roll conveyor
inlet M13 - M18

Bremswiderstand
Rollenbahn
Einlauf M19 - M24

brake resistor
roll conveyor
inlet M19 - M24

Duferco Clabecq

Management codes				Document identification				
5.3.0.0	CE	000	DW	QTPC	L04	ROSL	D	0049
System	Phase	Area	Typology	Project	Lot	Company	D/S	Number

Rev.	Date	Description	Prepared	Checked	Approved			
						Date	30.01.2012	
						Dus		

Duferco (SBM 2) Schaltschrank
in place of | Replaced by

RÖSLER finding a better way ...

Control
EB 40 ET 200S SA2

= ES
+ S

01-130070 00

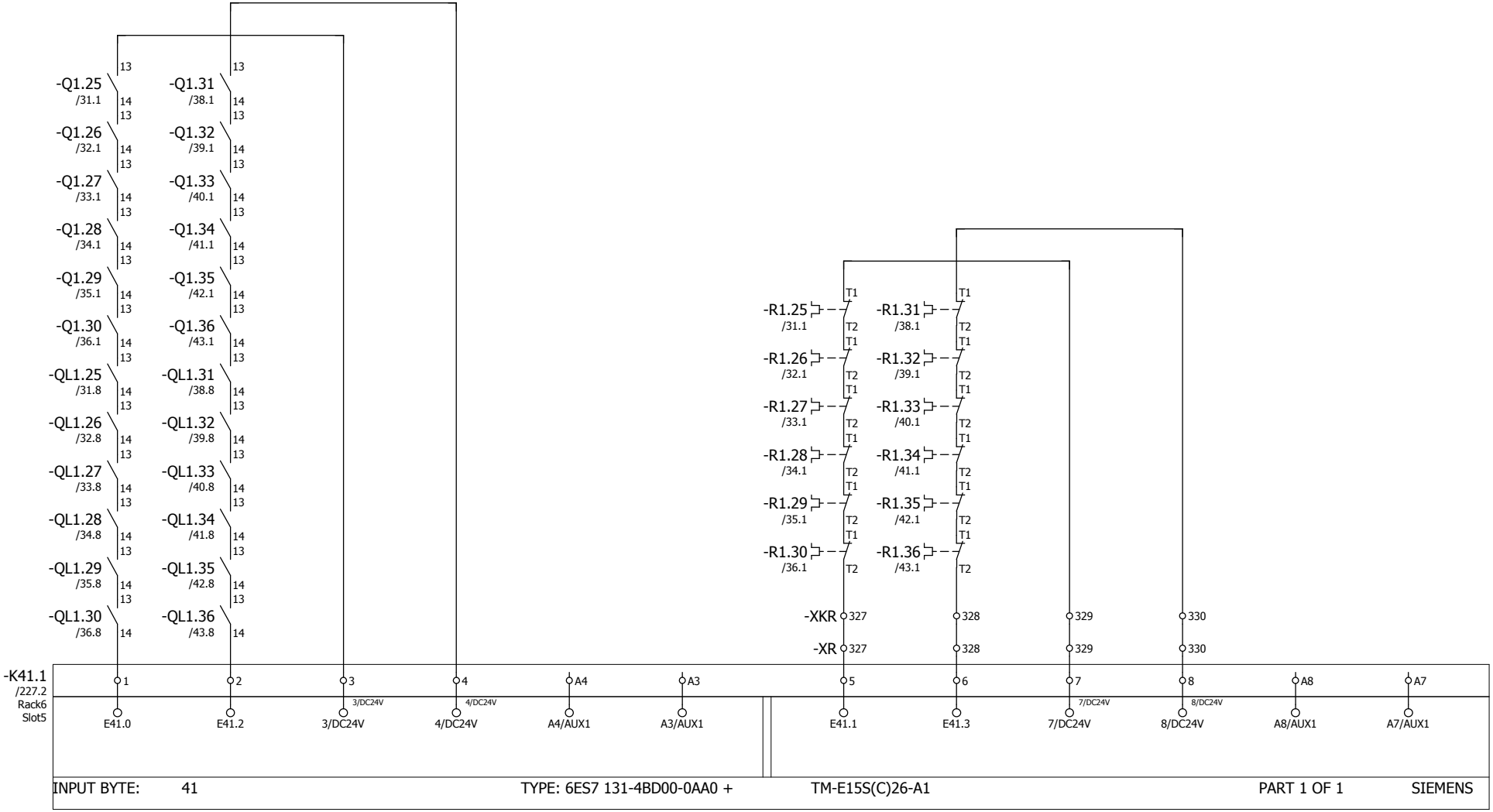

Motorschutz Rollenbahn Einlauf M25 - M30

motor prot. roll conveyor inlet M25 - M30

Motorschutz Rollenbahn Einlauf M31 - M36

motor prot. roll conveyor inlet M31 - M36

Bremswiderstand Rollenbahn Einlauf M25 - M30

brake resistor roll conveyor inlet M25 - M30

Bremswiderstand Rollenbahn Einlauf M31 - M36

brake resistor roll conveyor inlet M31 - M36

Duferco Clabecq

Management codes				Document identification				
5.3.0.0	CE	000	DW	QTPC	L04	ROSL	D	0049
System	Phase	Area	Typology	Project	Lot	Company	D/S	Number

Rev.	Date	Description	Prepared	Checked	Approved			
						Date	30.01.2012	
						Dus		

Duferco (SBM 2) Schaltschrank

in place of | Replaced by

RÖSLER finding a better way ...

Control
EB 41 ET 200S SA2

= ES
+ S

01-130070 00

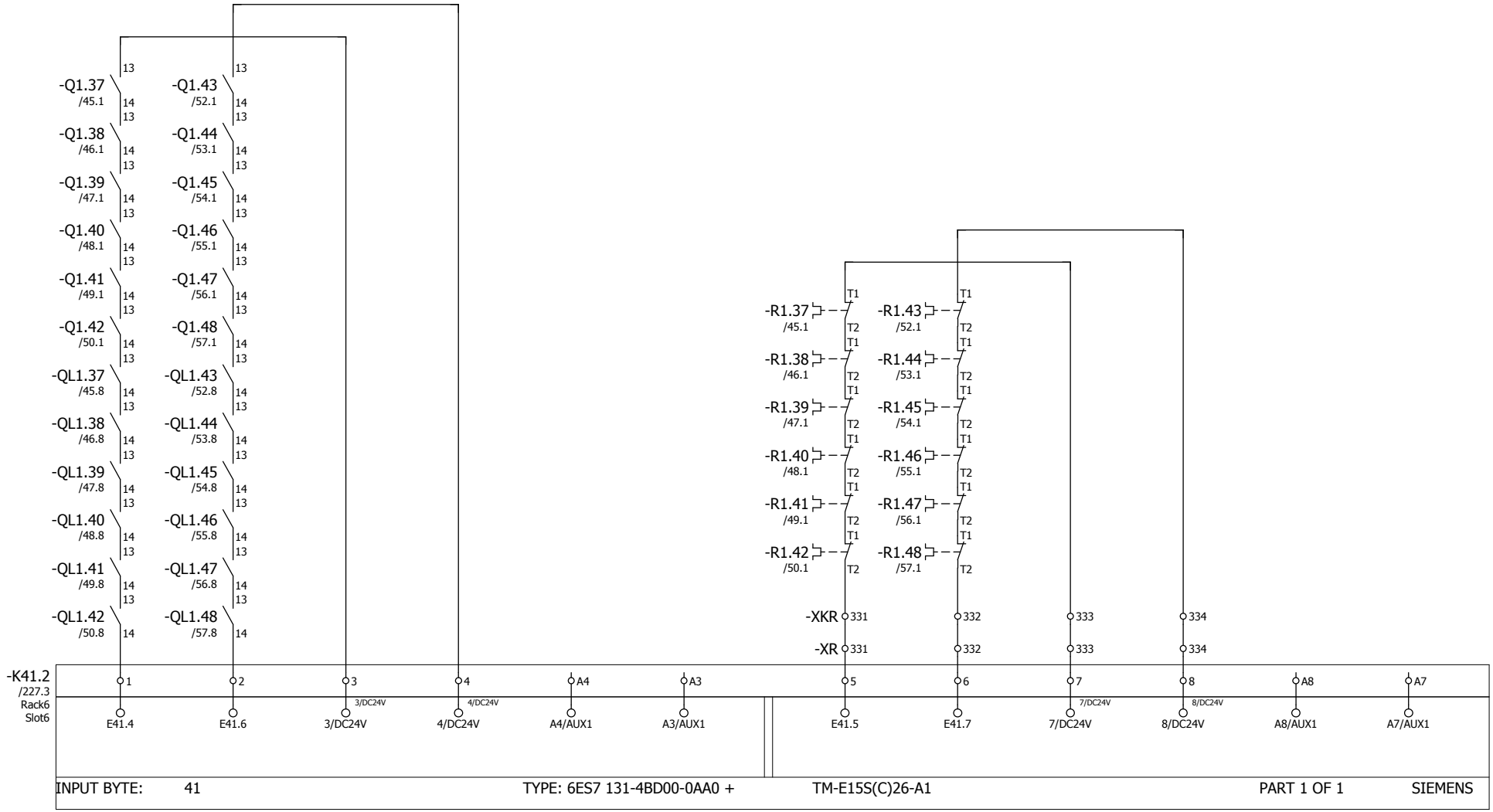

Motorschutz Rollenbahn Einlauf M37 - M42

motor prot. roll conveyor inlet M37 - M42

Motorschutz Rollenbahn Einlauf M43 - M48

motor prot. roll conveyor inlet M43 - M48

Bremswiderstand Rollenbahn Einlauf M37 - M42

brake resistor roll conveyor inlet M37 - M42

Bremswiderstand Rollenbahn Einlauf M43 - M48

brake resistor roll conveyor inlet M43 - M48

Duferco Clabecq

Management codes				Document identification				
5.3.0.0	CE	000	DW	QTPC	L04	ROSL	D	0049
System	Phase	Area	Typology	Project	Lot	Company	D/S	Number

Rev.	Date	Description	Prepared	Checked	Approved			
						Date	30.01.2012	
						Dus		

Duferco (SBM 2) Schaltschrank

in place of | Replaced by

RÖSLER finding a better way ...

Control
EB 41 ET 200S SA2

= ES
+ S

01-130070 00

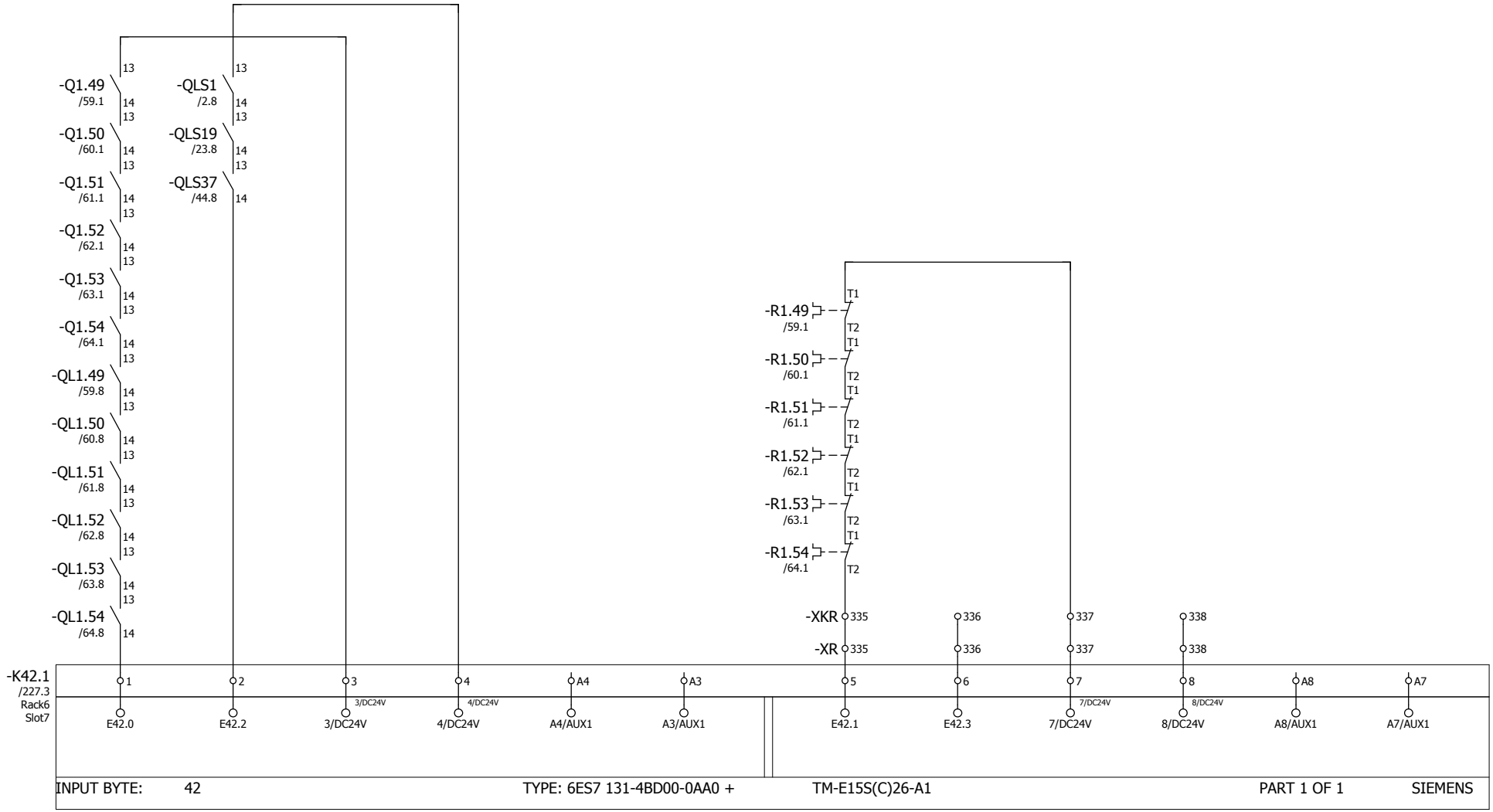

Motorschutz Rollenbahn Einlauf M49 - M54	Motorschutz Lüfter Schaltschrank	Bremswiderstand Rollenbahn Einlauf M49 - M54	Reserve reserve
motor prot. roll conveyor inlet M49 - M54	motor prot. ventilator Enclosure	brake resistor roll conveyor inlet M49 - M54	

Duferco Clabecq

Management codes				Document identification				
5.3.0.0	CE	000	DW	QTPC	L04	ROSL	D	0049
System	Phase	Area	Typology	Project	Lot	Company	D/S	Number

321 323

Rev.	Date	Description	Prepared	Checked	Approved			
						Date	30.01.2012	
						Dus		
							Duferco (SBM 2) Schaltschrank	
							in place of	Replaced by

RÖSLER finding a better way ...

Control
EB 42 ET 200S SA2

= ES
+ S

01-130070 00

Page 322
from 565

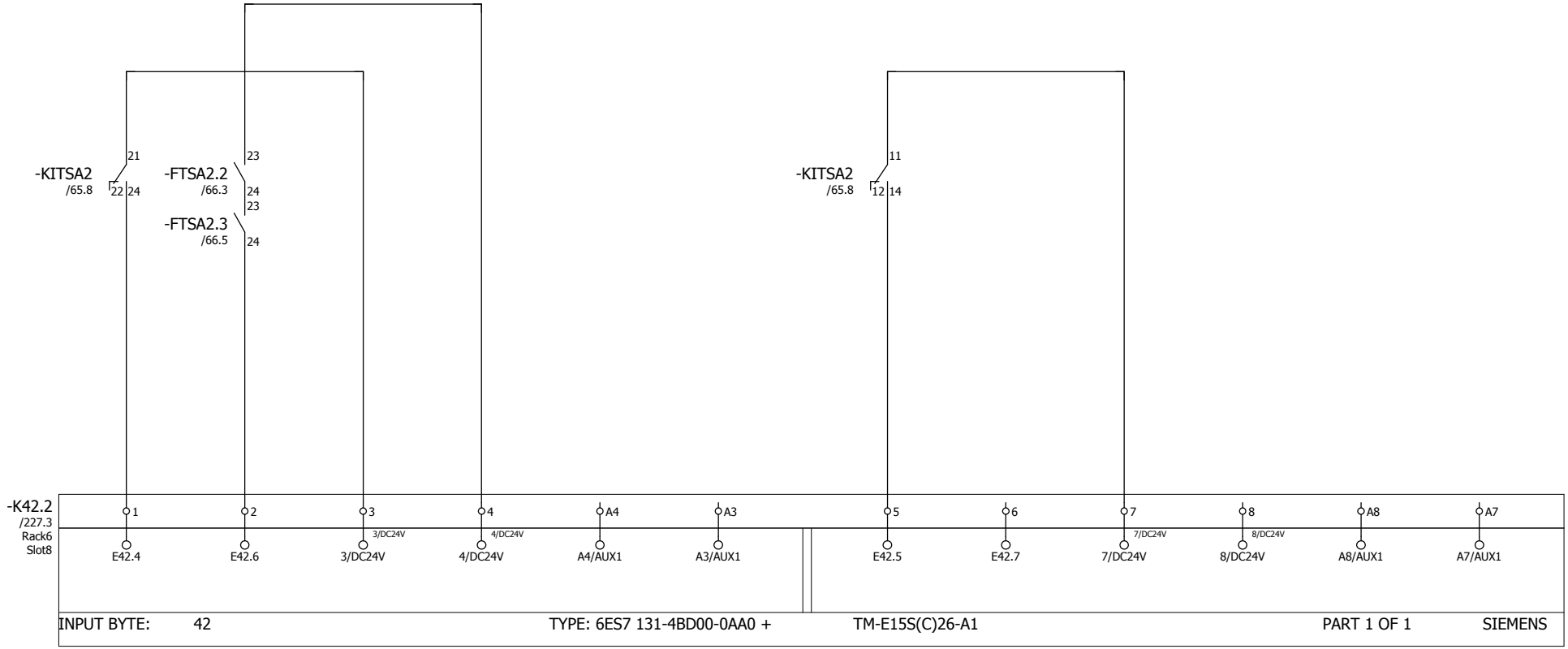

Isolationswächter
24V DC Netzteil SA2
Vorwarnung

insulation monitor
24V DC Power supply unit
SA2 pre-warning

Überwachung
24VDC SA2

monitoring
24VDC SA2

Isolationswächter
24V DC Netzteil SA2
Alarm

insulation monitor
24V DC Power supply unit
SA2 alarm

Reserve

reserve

Duferco Clabecq

Management codes				Document identification				
5.3.0.0	CE	000	DW	QTPC	L04	ROSL	D	0049
System	Phase	Area	Typology	Project	Lot	Company	D/S	Number

Rev.	Date	Description	Prepared	Checked	Approved			
						Date	30.01.2012	
						Dus		

Duferco (SBM 2) Schaltschrank
in place of | Replaced by

RÖSLER finding a better way ...

Control
EB 42 ET 200S SA2

= ES
+ S

01-130070 00

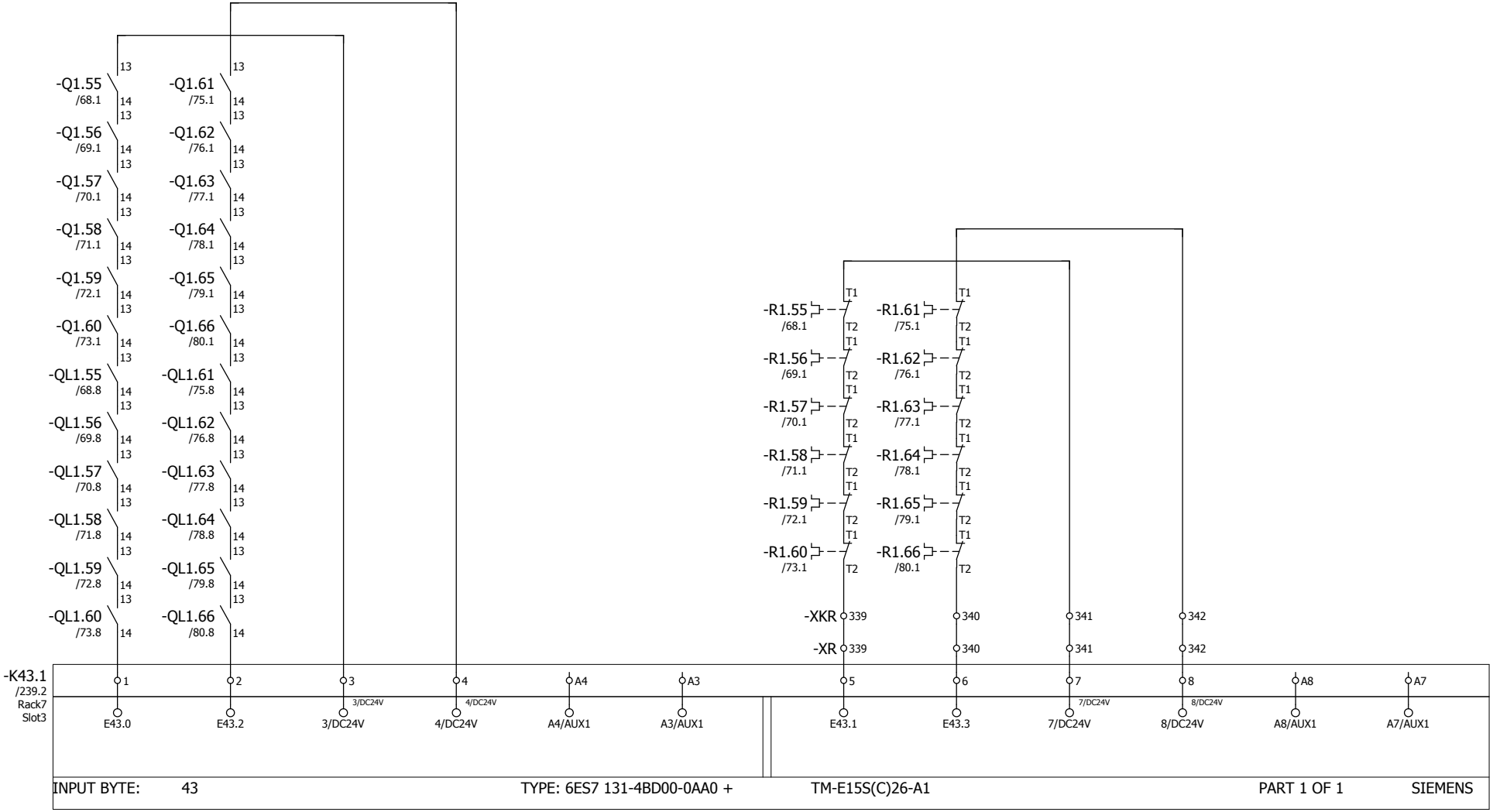

Motorschutz Rollenbahn Einlauf M55 - M60

motor prot. roll conveyor inlet M55 - M60

Motorschutz Rollenbahn Einlauf M61 - M66

motor prot. roll conveyor inlet M61 - M66

Bremswiderstand Rollenbahn Einlauf M55 - M60

brake resistor roll conveyor inlet M55 - M60

Bremswiderstand Rollenbahn Einlauf M61 - M66

brake resistor roll conveyor inlet M61 - M66

Duferco Clabecq

Management codes				Document identification				
5.3.0.0	CE	000	DW	QTPC	L04	ROSL	D	0049
System	Phase	Area	Typology	Project	Lot	Company	D/S	Number

Rev.	Date	Description	Prepared	Checked	Approved			
						Date	30.01.2012	
						Dus		

Duferco (SBM 2) Schaltschrank

in place of | Replaced by

RÖSLER finding a better way ...

Control
EB 43 ET 200S SA3

= ES
+ S

01-130070 00

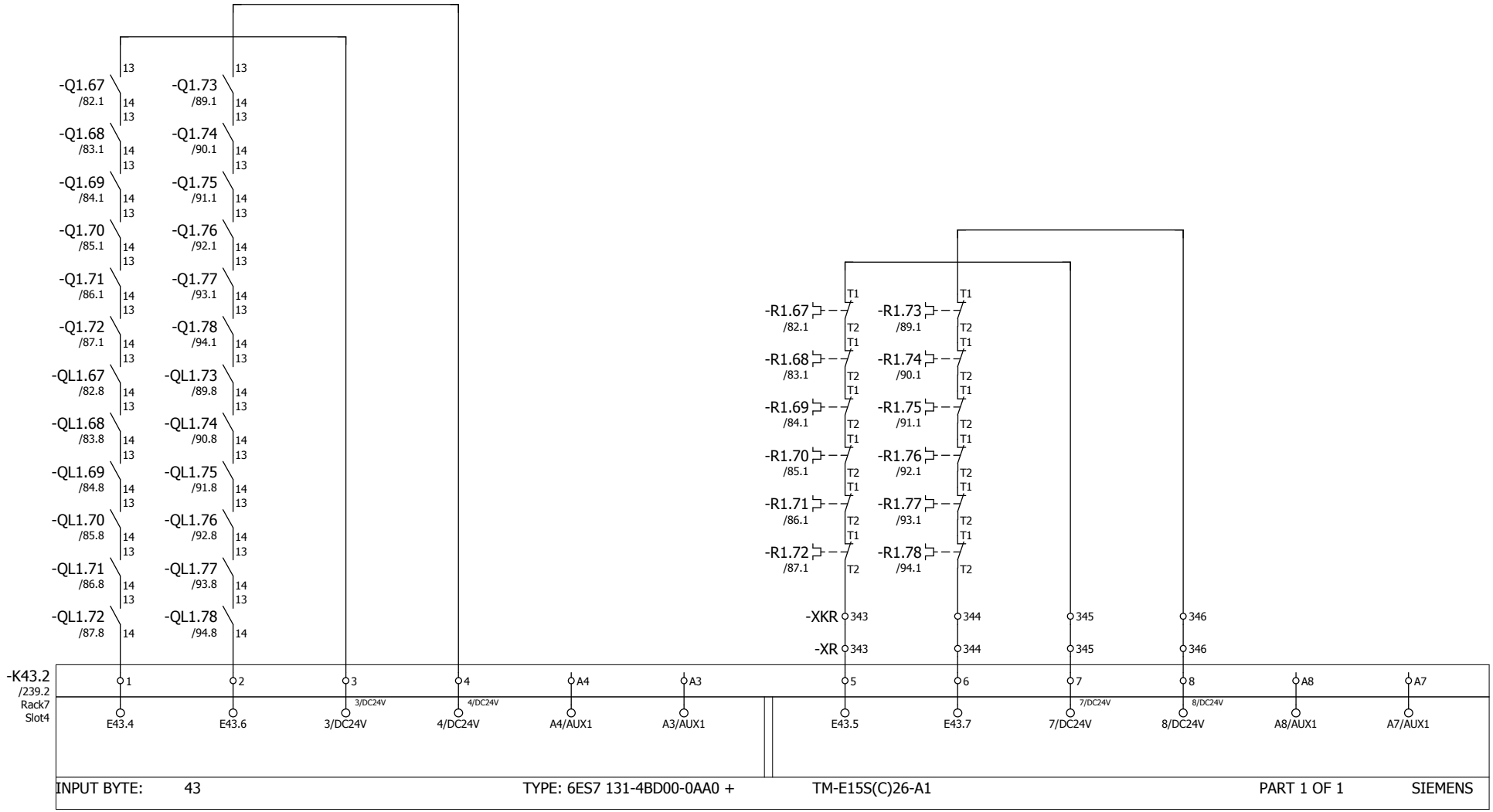

Motorschutz Rollenbahn Einlauf M67 - M72

motor prot. roll conveyor inlet M67 - M72

Motorschutz Rollenbahn Einlauf M73 - M78

motor prot. roll conveyor inlet M73 - M78

Bremswiderstand Rollenbahn Einlauf M67 - M72

brake resistor roll conveyor inlet M67 - M72

Bremswiderstand Rollenbahn Einlauf M73 - M78

brake resistor roll conveyor inlet M73 - M78

Duferco Clabecq

Management codes				Document identification				
5.3.0.0	CE	000	DW	QTPC	L04	ROSL	D	0049
System	Phase	Area	Typology	Project	Lot	Company	D/S	Number

Rev.	Date	Description	Prepared	Checked	Approved			
						Date	30.01.2012	
						Dus		

Duferco (SBM 2) Schaltschrank

in place of | Replaced by

RÖSLER finding a better way ...

Control
EB 43 ET 200S SA3

= ES
+ S

01-130070 00

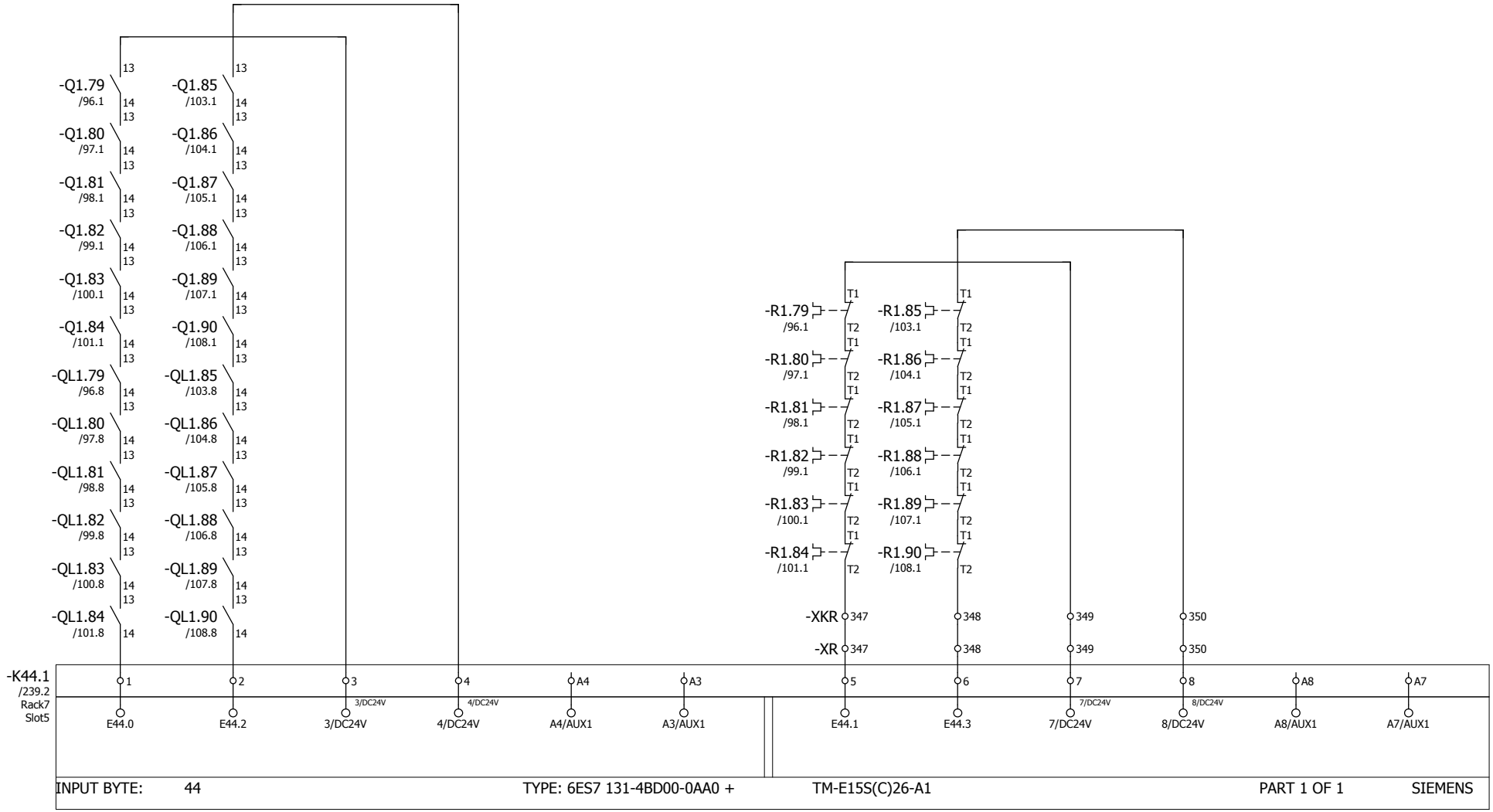

Motorschutz Rollenbahn Einlauf M79 - M84

motor prot. roll conveyor inlet M79 - M84

Motorschutz Rollenbahn Einlauf M85 - M90

motor prot. roll conveyor inlet M85 - M90

Bremswiderstand Rollenbahn Einlauf M79 - M84

brake resistor roll conveyor inlet M79 - M84

Bremswiderstand Rollenbahn Einlauf M85 - M90

brake resistor roll conveyor inlet M85 - M90

Duferco Clabecq

Management codes				Document identification				
5.3.0.0	CE	000	DW	QTPC	L04	ROSL	D	0049
System	Phase	Area	Typology	Project	Lot	Company	D/S	Number

Rev.	Date	Description	Prepared	Checked	Approved			
						Date	30.01.2012	
						Dus		

Duferco (SBM 2) Schaltschrank

in place of | Replaced by

RÖSLER finding a better way ...

Control
EB 44 ET 200S SA3

= ES
+ S

01-130070 00

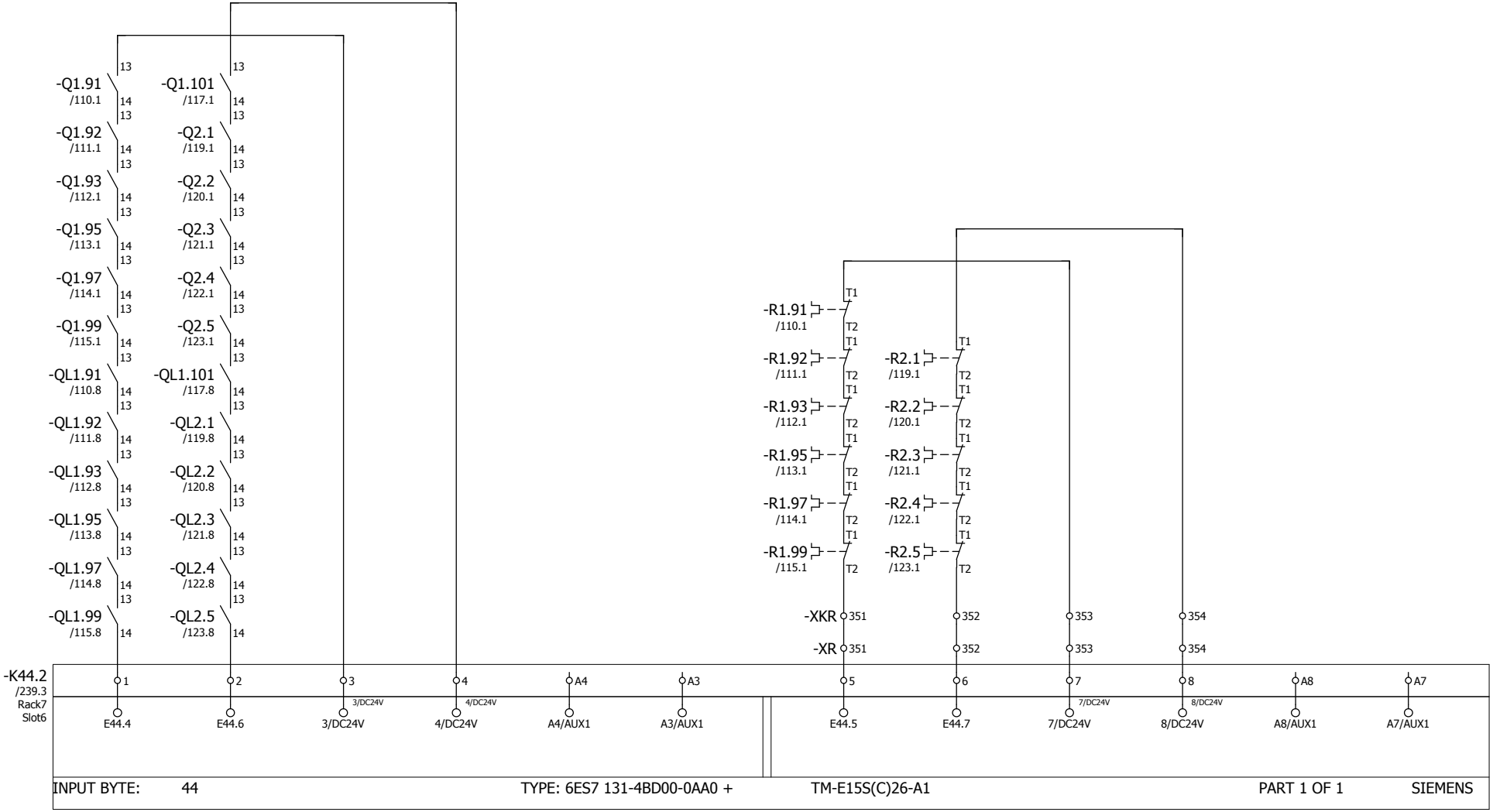

Motorschutz
Rollenbahn
Einlauf M91
Zwischenrollgang M99

motor prot.
roll conveyor
inlet M91
roll conveyor inside M99

Motorschutz
Rollenbahn
Kettenförderer M101
Auslauf M4

motor prot.
roll conveyor
chain conveyor
M101 outlet M4

Bremswiderstand
Rollenbahn
Einlauf M91
Zwischenrollgang M99

brake resistor
roll conveyor
inlet M91
roll conveyor inside M99

Bremswiderstand
Rollenbahn
Auslauf M1 - M4

brake resistor
roll conveyor
outlet M1 - M4

Duferco Clabecq

Management codes				Document identification				
5.3.0.0	CE	000	DW	QTPC	L04	ROSL	D	0049
System	Phase	Area	Typology	Project	Lot	Company	D/S	Number

Rev.	Date	Description	Prepared	Checked	Approved			
						Date	30.01.2012	
						Dus		

Duferco (SBM 2) Schaltschrank
in place of | Replaced by

RÖSLER finding a better way ...

Control
EB 44 ET 200S SA3

= ES
+ S

01-130070 00

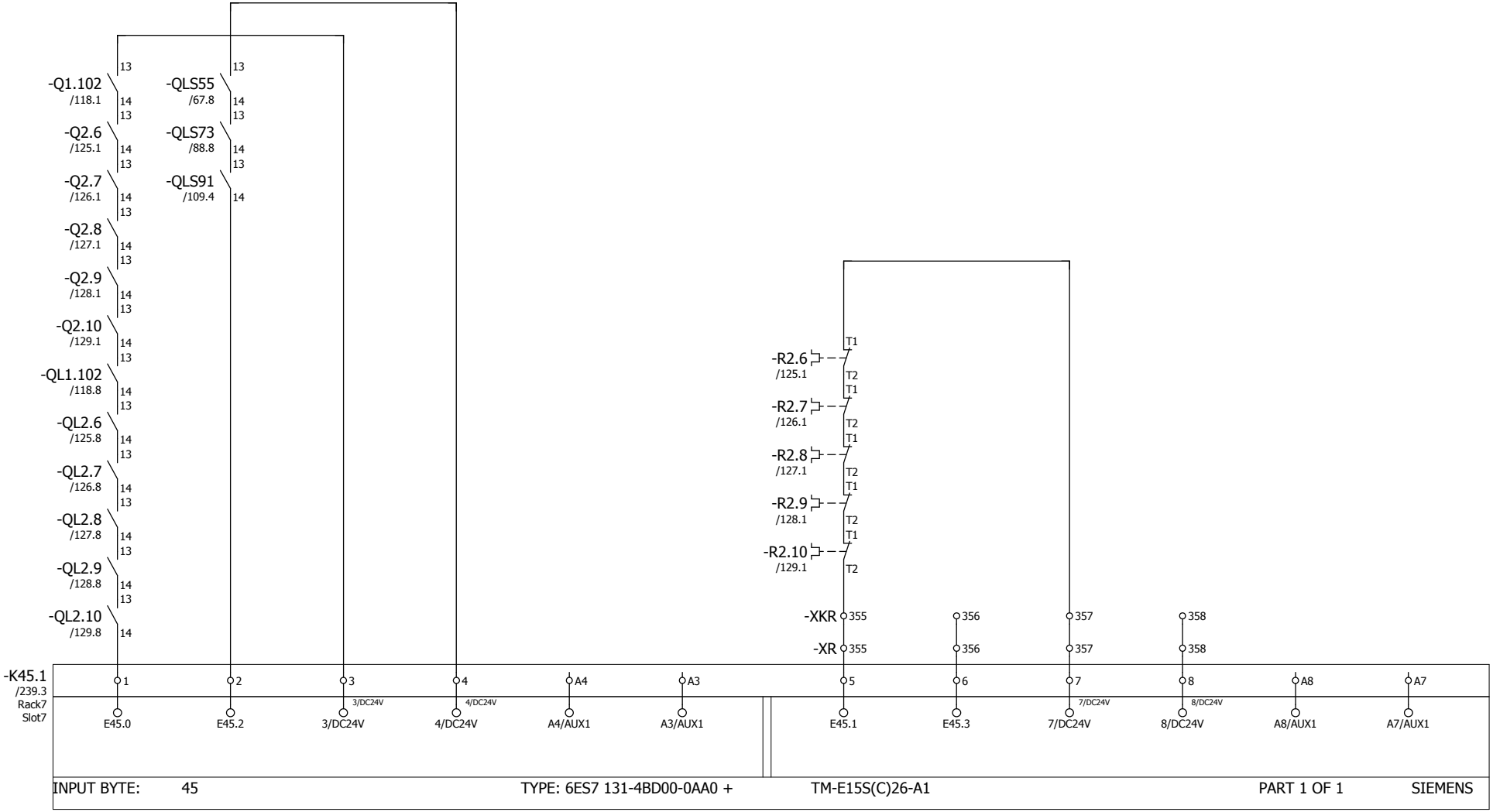

Motorschutz Rollenbahn Auslauf M5 - M10	Motorschutz Lüfter Schaltschrank	Bremswiderstand Rollenbahn Auslauf M5 - M10	Reserve reserve
motor prot. roll conveyor outlet M5 - M10	motor prot. ventilator Enclosure	brake resistor roll conveyor outlet M5 - M10	

Duferco Clabecq

Management codes				Document identification				
5.3.0.0	CE	000	DW	QTPC	L04	ROSL	D	0049
System	Phase	Area	Typology	Project	Lot	Company	D/S	Number

327 329

Rev.	Date	Description	Prepared	Checked	Approved			
						Date	30.01.2012	
						Dus		
							Duferco (SBM 2) Schaltschrank	
							in place of	Replaced by

RÖSLER finding a better way ...

Control
EB 45 ET 200S SA3

= ES
+ S

01-130070 00

Page 328
from 565

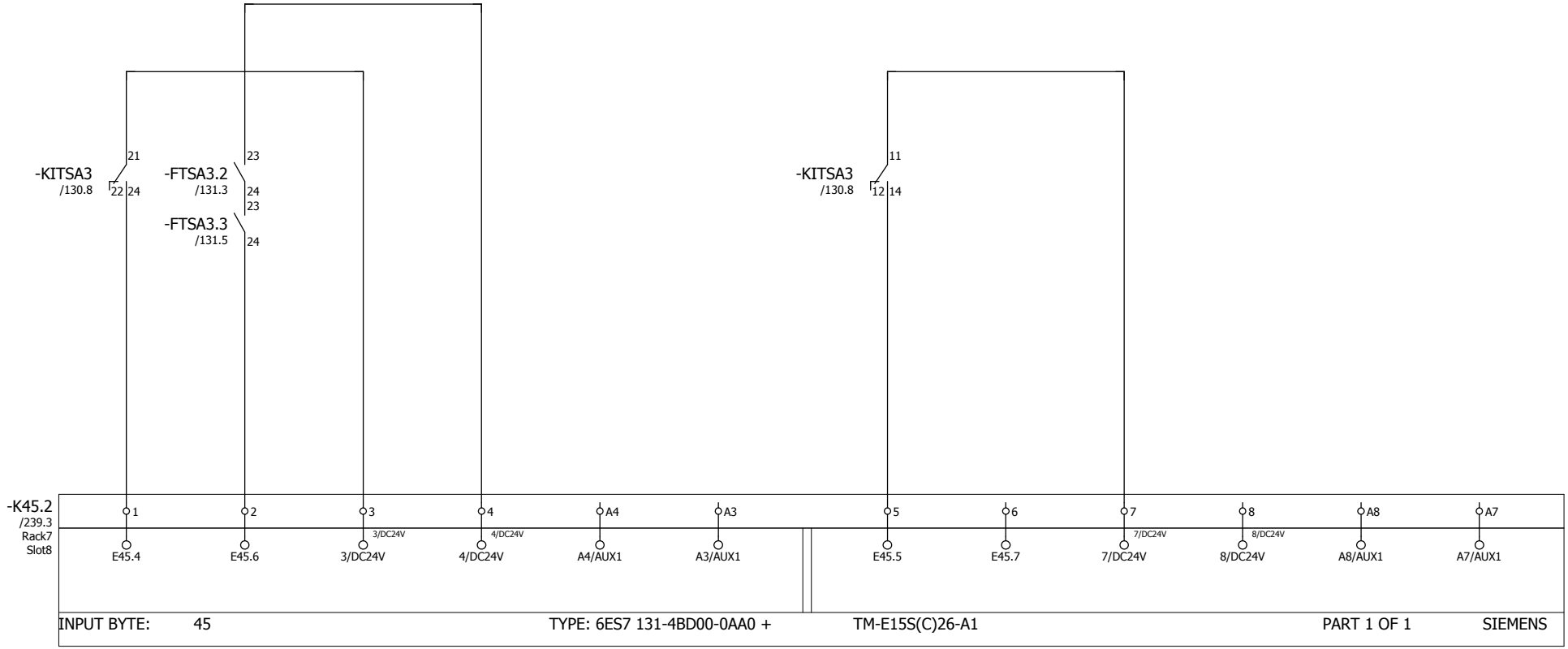

Isolationswächter
24V DC Netzteil SA3
Vorwarnung

insulation monitor
24V DC Power supply unit
SA3 pre-warning

Überwachung
24VDC SA3

monitoring
24VDC SA3

Isolationswächter
24V DC Netzteil SA3
Alarm

insulation monitor
24V DC Power supply unit
SA3 alarm

Reserve

reserve

Duferco Clabecq

Management codes				Document identification				
5.3.0.0	CE	000	DW	QTPC	L04	ROSL	D	0049
System	Phase	Area	Typology	Project	Lot	Company	D/S	Number

328 330

						Date	30.01.2012	Duferco (SBM 2) Schaltschrank	
						Dus			
Rev.	Date	Description	Prepared	Checked	Approved			in place of	Replaced by

RÖSLER finding a better way ...

Control
EB 45 ET 200S SA3

= ES
+ S

01-130070 00

Page 329
from 565

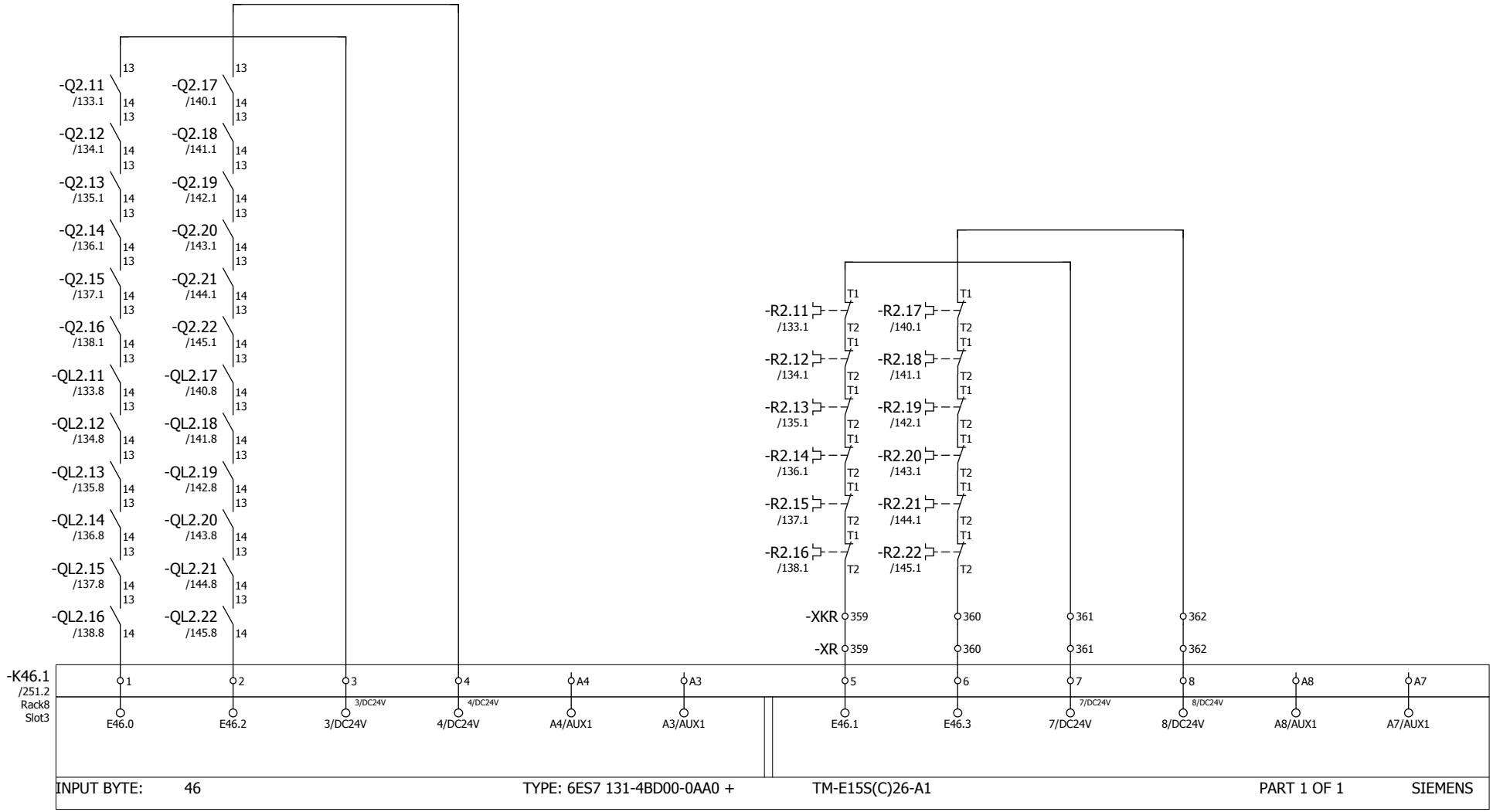

Motorschutz Rollenbahn Auslauf M11 - M16

motor prot. roll conveyor outlet M11 - M16

Motorschutz Rollenbahn Auslauf M17 - M22

motor prot. roll conveyor outlet M17 - M22

Bremswiderstand Rollenbahn Auslauf M11 - M16

brake resistor roll conveyor outlet M11 - M16

Bremswiderstand Rollenbahn Auslauf M17 - M22

brake resistor roll conveyor outlet M17 - M22

Duferco Clabecq

Management codes				Document identification				
5.3.0.0	CE	000	DW	QTPC	L04	ROSL	D	0049
System	Phase	Area	Typology	Project	Lot	Company	D/S	Number

Rev.	Date	Description	Prepared	Checked	Approved			
						Date	30.01.2012	
						Dus		
							in place of	Replaced by

Duferco (SBM 2) Schaltschrank

RÖSLER finding a better way ...

Control
EB 46 ET 200S SA4

= ES
+ S

01-130070 00

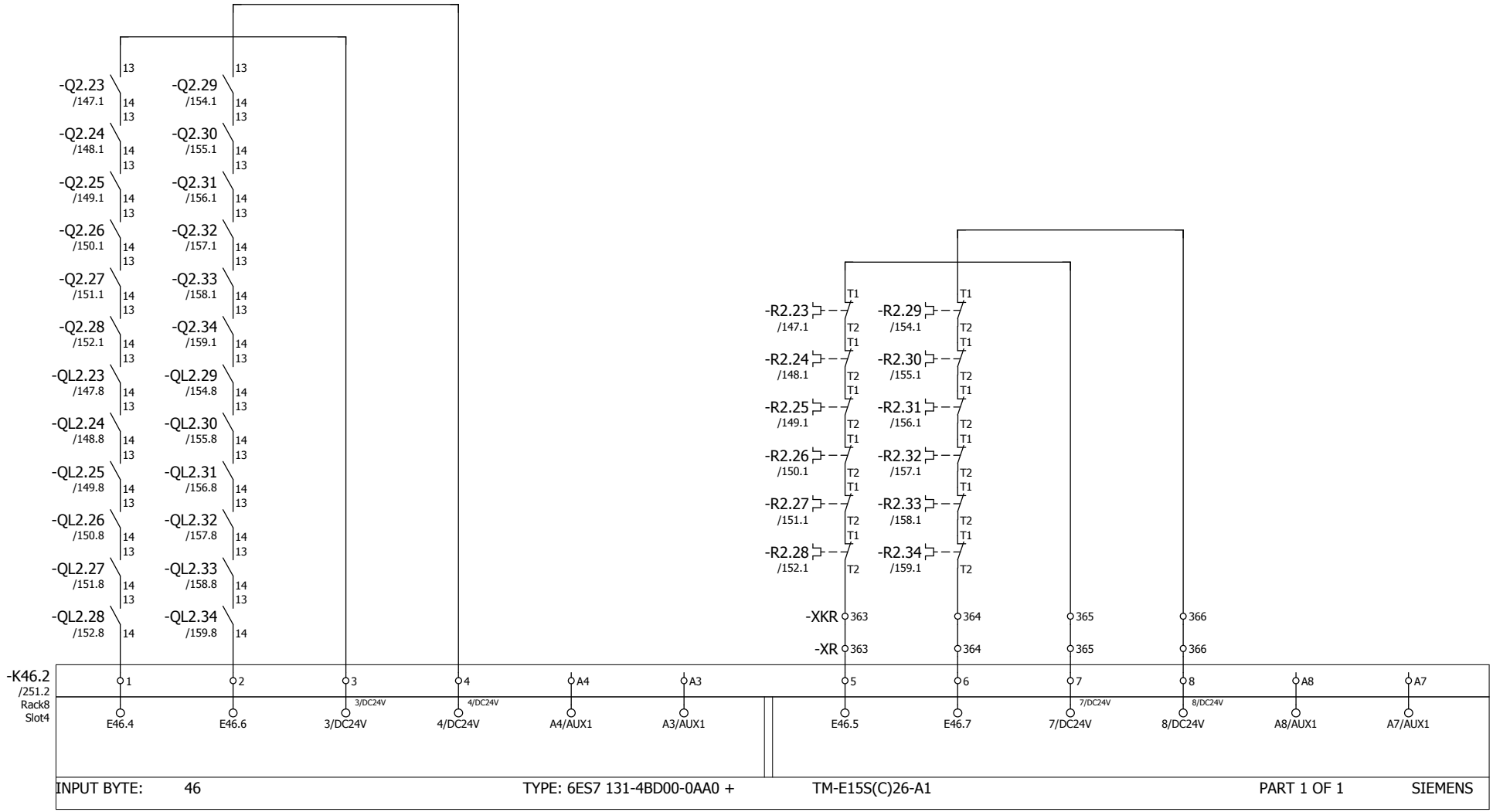

Motorschutz Rollenbahn Auslauf M23 - M28

motor prot. roll conveyor outlet M23 - M28

Motorschutz Rollenbahn Auslauf M29 - M34

motor prot. roll conveyor outlet M29 - M34

Bremswiderstand Rollenbahn Auslauf M23 - M28

brake resistor roll conveyor outlet M23 - M28

Bremswiderstand Rollenbahn Auslauf M29 - M34

brake resistor roll conveyor outlet M29 - M34

Duferco Clabecq

Management codes				Document identification				
5.3.0.0	CE	000	DW	QTPC	L04	ROSL	D	0049
System	Phase	Area	Typology	Project	Lot	Company	D/S	Number

330 332

Rev.	Date	Description	Prepared	Checked	Approved			
						Date	30.01.2012	
						Dus		

Duferco (SBM 2) Schaltschrank

in place of | Replaced by

RÖSLER finding a better way ...

Control
EB 46 ET 200S SA4

= ES
+ S

01-130070 00

Page 331
from 565

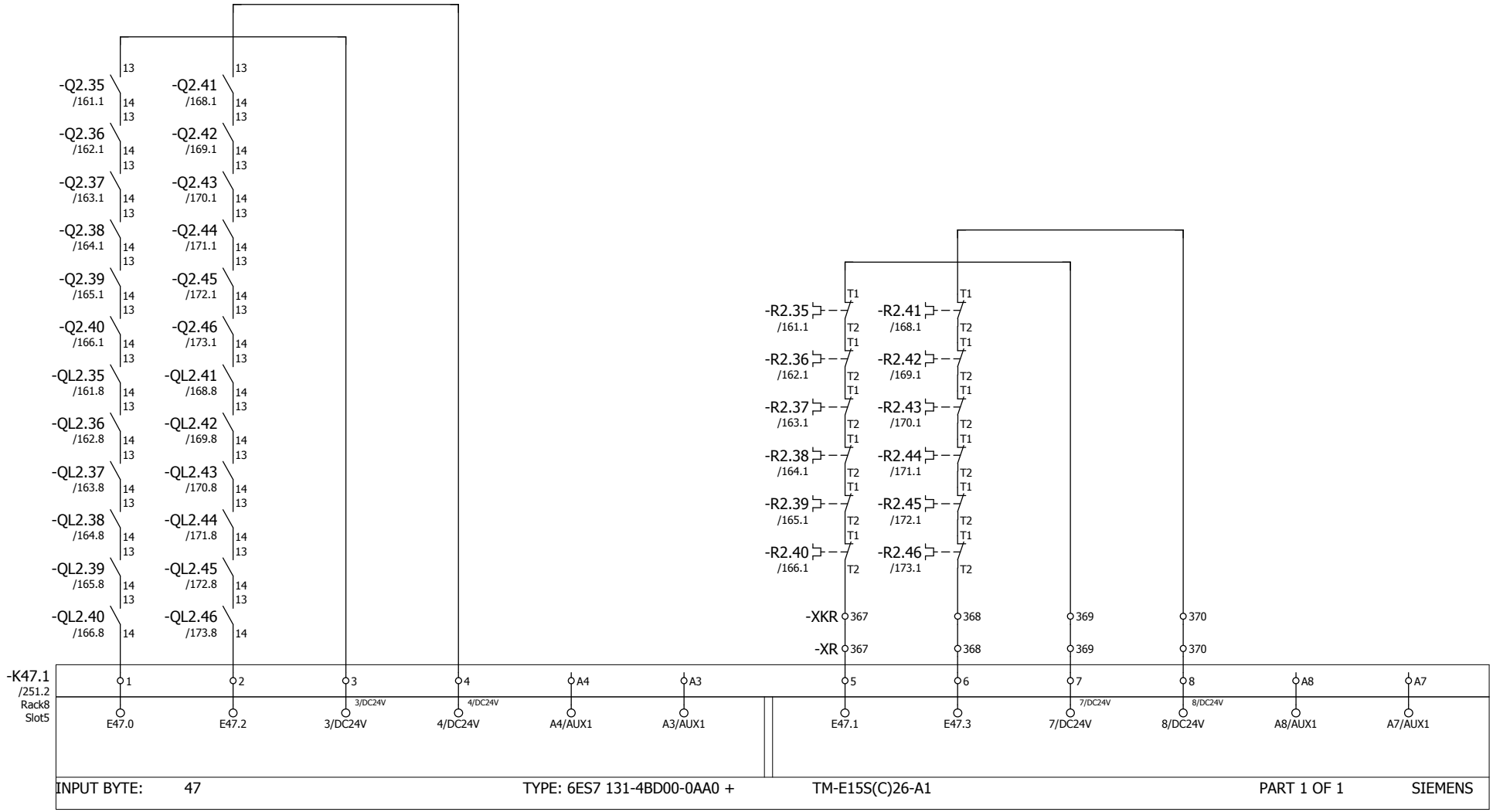

Motorschutz Rollenbahn Auslauf M35 - M40

motor prot. roll conveyor outlet M35 - M40

Motorschutz Rollenbahn Auslauf M41 - M46

motor prot. roll conveyor outlet M41 - M46

Bremswiderstand Rollenbahn Auslauf M35 - M40

brake resistor roll conveyor outlet M35 - M40

Bremswiderstand Rollenbahn Auslauf M41 - M46

brake resistor roll conveyor outlet M41 - M46

Duferco Clabecq

Management codes				Document identification				
5.3.0.0	CE	000	DW	QTPC	L04	ROSL	D	0049
System	Phase	Area	Typology	Project	Lot	Company	D/S	Number

Rev.	Date	Description	Prepared	Checked	Approved			
						Date	30.01.2012	
						Dus		
							in place of	Replaced by

Duferco (SBM 2) Schaltschrank

RÖSLER finding a better way ...

Control
EB 47 ET 200S SA4

= ES
+ S

01-130070 00

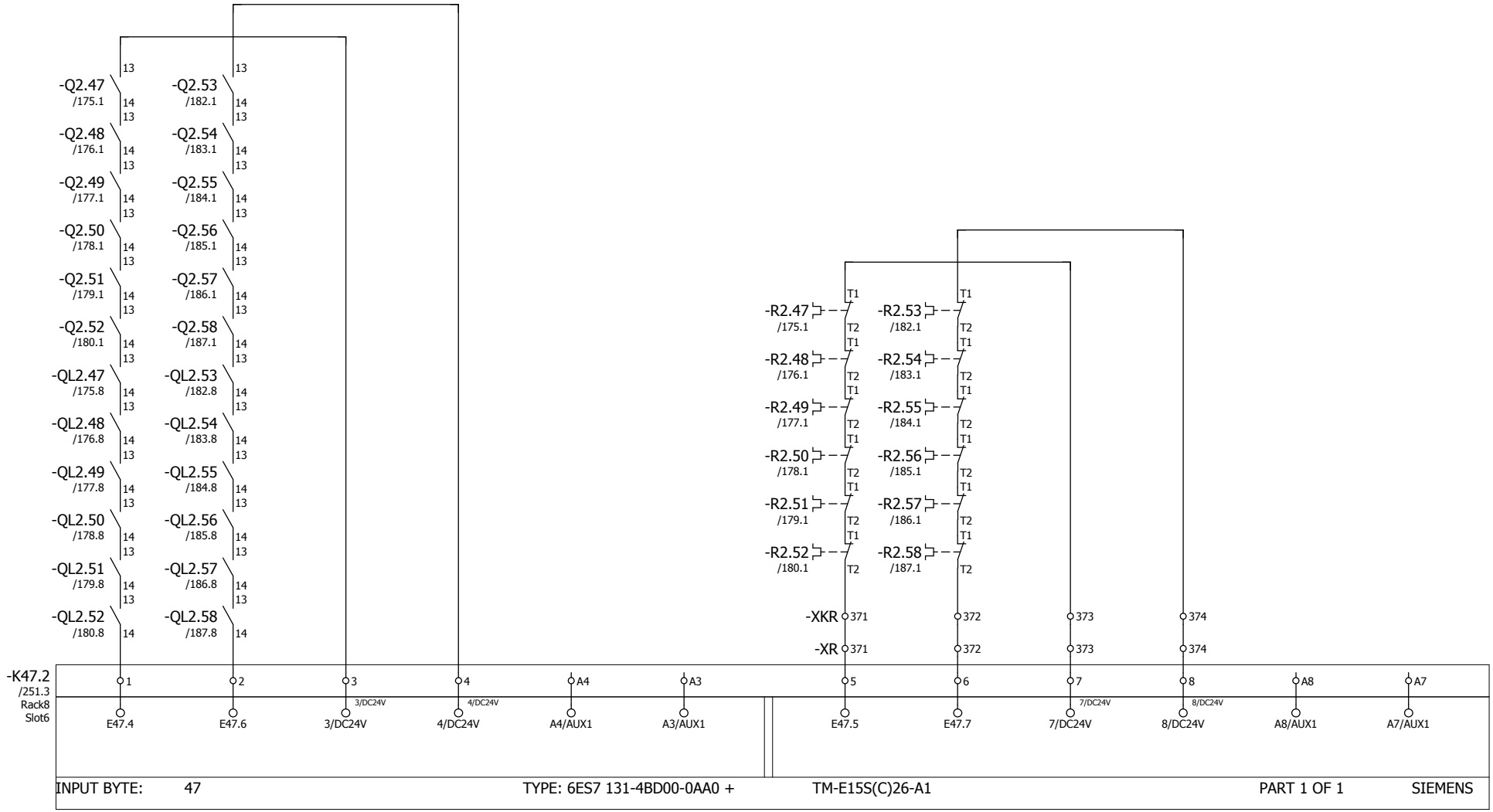

Motorschutz Rollenbahn Auslauf M47 - M52

motor prot. roll conveyor outlet M47 - M52

Motorschutz Rollenbahn Auslauf M53 - M58

motor prot. roll conveyor outlet M53 - M58

Bremswiderstand Rollenbahn Auslauf M47 - M52

brake resistor roll conveyor outlet M47 - M52

Bremswiderstand Rollenbahn Auslauf M53 - M58

brake resistor roll conveyor outlet M53 - M58

Duferco Clabecq

Management codes				Document identification				
5.3.0.0	CE	000	DW	QTPC	L04	ROSL	D	0049
System	Phase	Area	Typology	Project	Lot	Company	D/S	Number

Rev.	Date	Description	Prepared	Checked	Approved			
						Date	30.01.2012	
						Dus		

Duferco (SBM 2) Schaltschrank

in place of | Replaced by

RÖSLER finding a better way ...

Control
EB 47 ET 200S SA4

= ES
+ S

01-130070 00

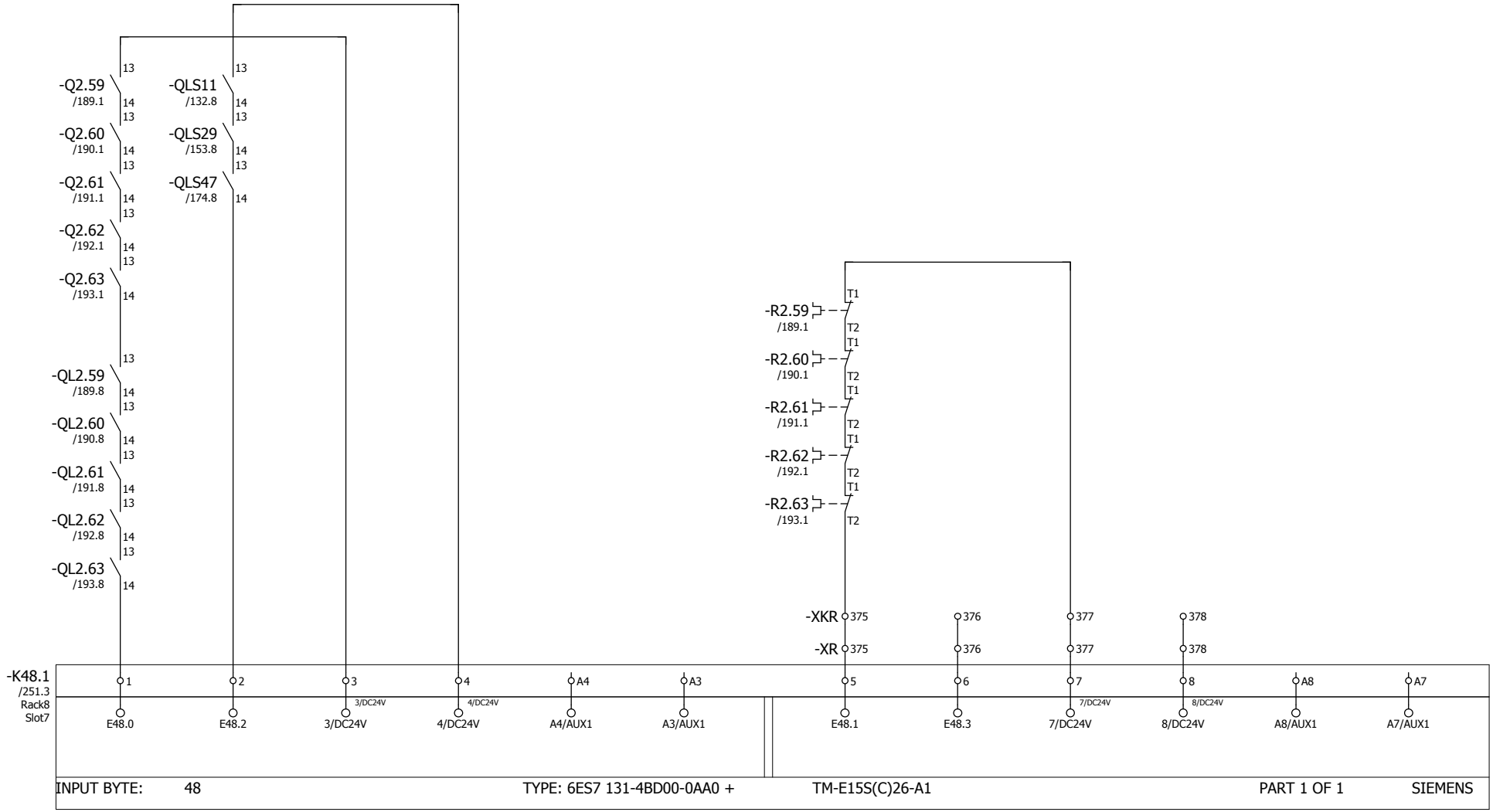

Motorschutz Rollenbahn Auslauf M59 - M63	Motorschutz Lüfter Schaltschrank	Bremswiderstand Rollenbahn Auslauf M59 - M63	Reserve reserve
motor prot. roll conveyor outlet M59 - M63	motor prot. ventilator Enclosure	brake resistor roll conveyor outlet M59 - M63	

Duferco Clabecq

Management codes				Document identification				
5.3.0.0	CE	000	DW	QTPC	L04	ROSL	D	0049
System	Phase	Area	Typology	Project	Lot	Company	D/S	Number

333 335

Rev.	Date	Description	Prepared	Checked	Approved			
						Date	30.01.2012	
						Dus		
							Duferco (SBM 2) Schaltschrank	
							in place of	Replaced by

RÖSLER finding a better way ...

Control
EB 48 ET 200S SA4

= ES
+ S

01-130070 00

Page 334
from 565

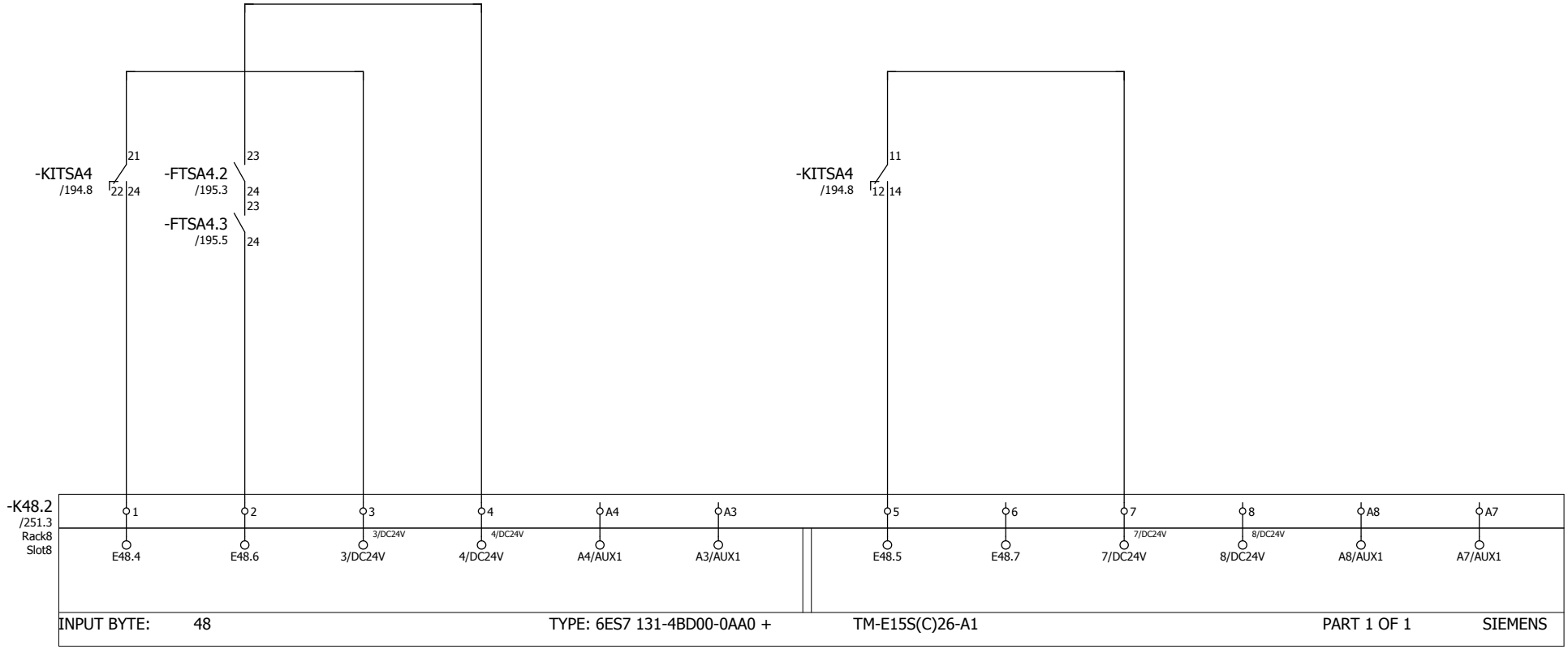

Isolationswächter
24V DC Netzteil SA4
Vorwarnung

insulation monitor
24V DC Power supply unit
SA4 pre-warning

Überwachung
24VDC SA4

monitoring
24VDC SA4

Isolationswächter
24V DC Netzteil SA4
Alarm

insulation monitor
24V DC Power supply unit
SA4 alarm

Reserve

reserve

Duferco Clabecq

Management codes				Document identification				
5.3.0.0	CE	000	DW	QTPC	L04	ROSL	D	0049
System	Phase	Area	Typology	Project	Lot	Company	D/S	Number

334 336

Rev.	Date	Description	Prepared	Checked	Approved			
						Date	30.01.2012	
						Dus		

Duferco (SBM 2) Schaltschrank
in place of | Replaced by

RÖSLER finding a better way ...

Control
EB 48 ET 200S SA4

= ES
+ S

01-130070 00

Page 335
from 565

Pneumatik XL11
pneumatics XL11

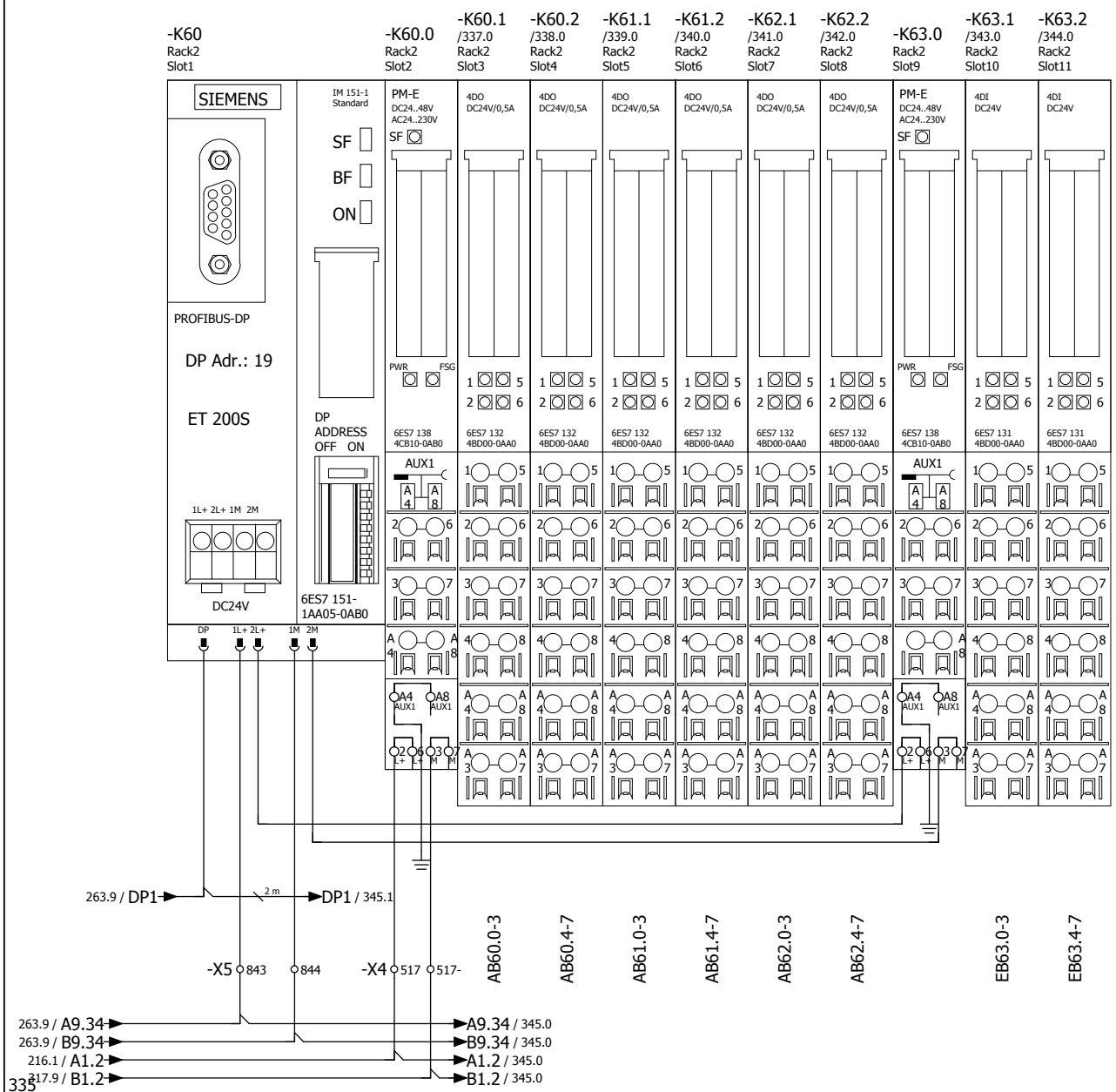

Management codes				Document identification				
5.3.0.0	CE	000	DW	QTPC	L04	ROSL	D	0049
System	Phase	Area	Typology	Project	Lot	Company	D/S	Number

Duferco Clabecq

335 337

Rev.	Date	Description	Prepared	Checked	Approved			
						Date	30.01.2012	
						Dus		

Duferco (SBM 2) Schaltschrank

in place of | Replaced by

RÖSLER finding a better way ...

Control erection PLC
ET 200S pneumatics

= ES
+ S

01-130070 00

Page 336
from 565

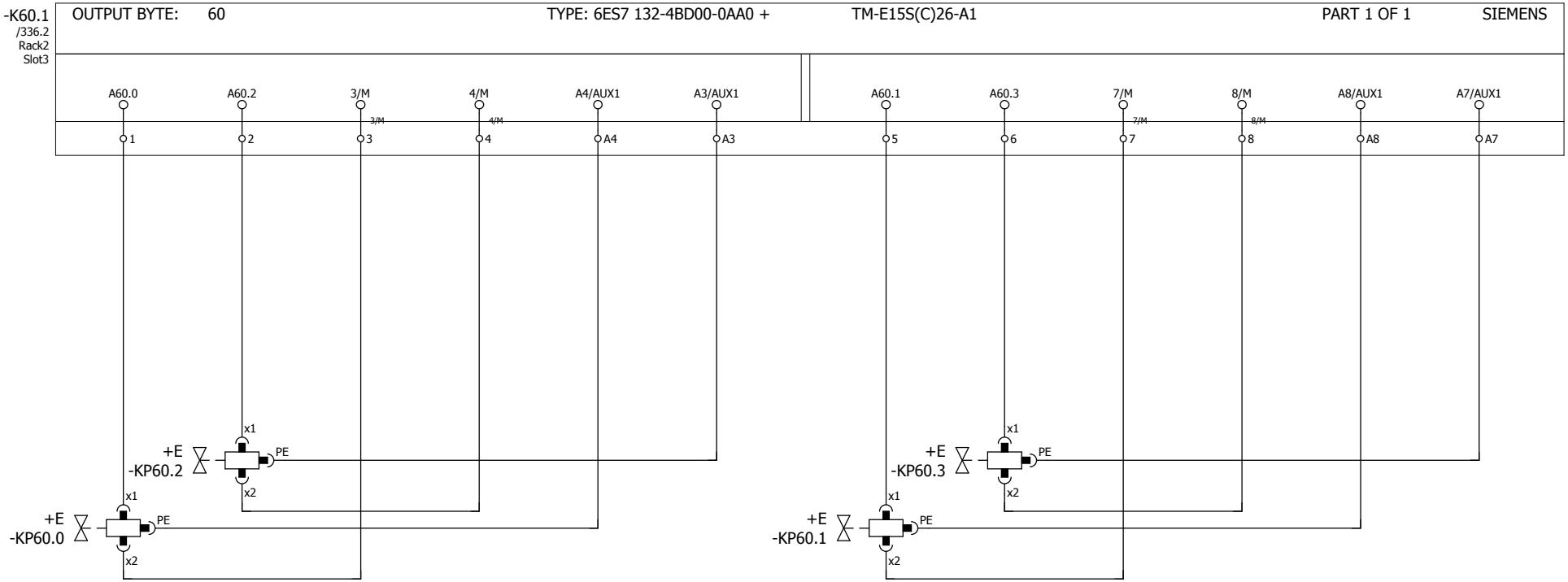

Hauptventil Pneumatik ein main valve pneumatics on	Magnetventil Klappsieb Grundstellung Solenoid valve pivoting sieve ground position	Magnetventil Strahlmittel nachfüllen electrovalve blast media refilling	Magnetventil Klappsieb Position Solenoid valve pivoting sieve position

Duferco Clabecq

Management codes				Document identification				
5.3.0.0	CE	000	DW	QTPC	L04	ROSL	D	0049
System	Phase	Area	Typology	Project	Lot	Company	D/S	Number

Rev.	Date	Description	Prepared	Checked	Approved			
						Date	30.01.2012	
						Dus		
							Duferco (SBM 2) Schaltschrank	
							in place of	Replaced by

RÖSLER finding a better way ...

Control AB
60

= ES
+ S

01-130070 00

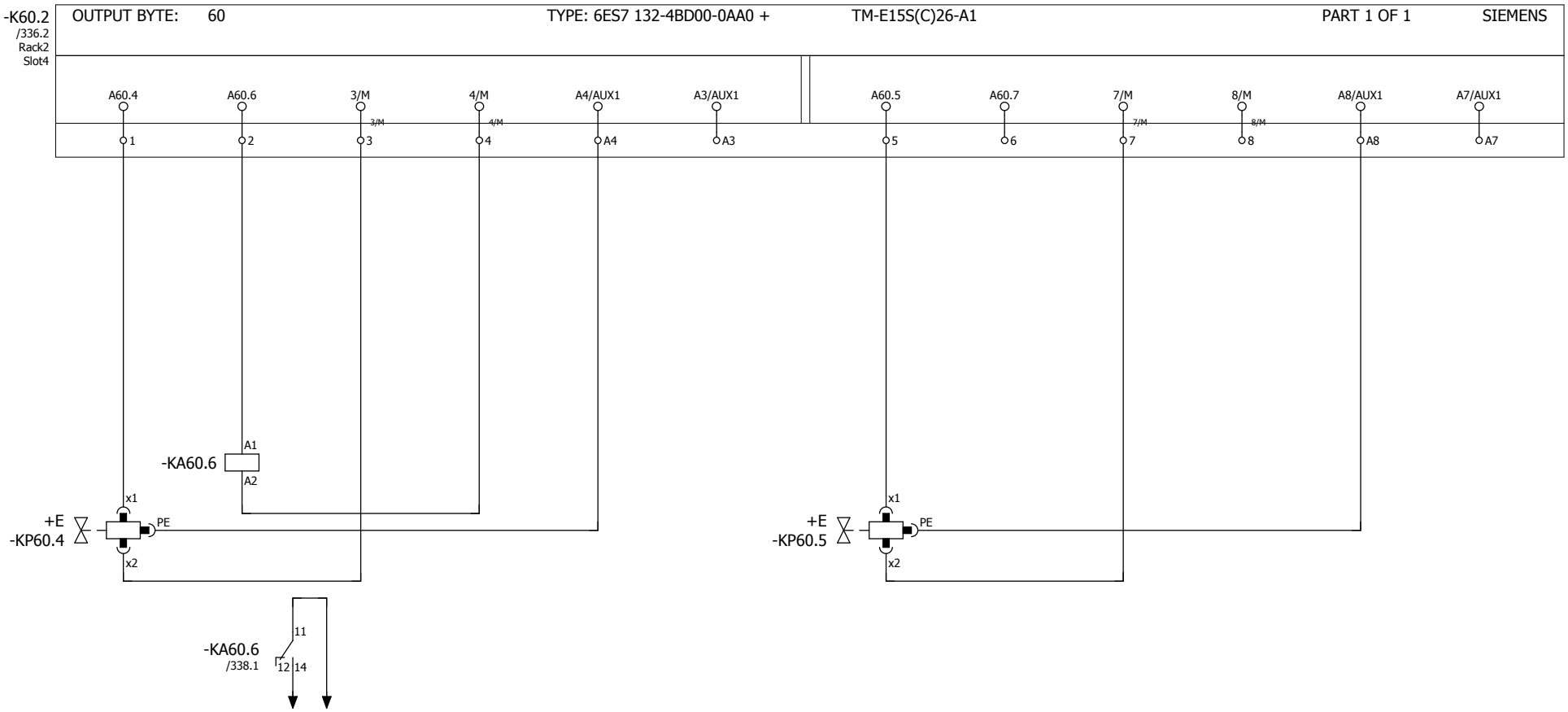

Magnetventil
Klappgummi 1 + 2
Grundstellung

Solenoid valve
tilting rubber
1 + 2 ground position

Verkettung
Steuerung Filter
Reinigen
interlinkage
Control Filter
cleaning

14 — 11 /338.2
12

Magnetventil
Klappgummi 1 + 2
Position

Solenoid valve
tilting rubber
1 + 2 position

Reserve

reserve

Duferco Clabecq

Management codes				Document identification				
5.3.0.0	CE	000	DW	QTPC	L04	ROSL	D	0049
System	Phase	Area	Typology	Project	Lot	Company	D/S	Number

Rev.	Date	Description	Prepared	Checked	Approved			
						Date	30.01.2012	
						Dus		

Duferco (SBM 2) Schaltschrank
in place of | Replaced by

RÖSLER finding a better way ...

Control AB
60

= ES
+ S

01-130070 00

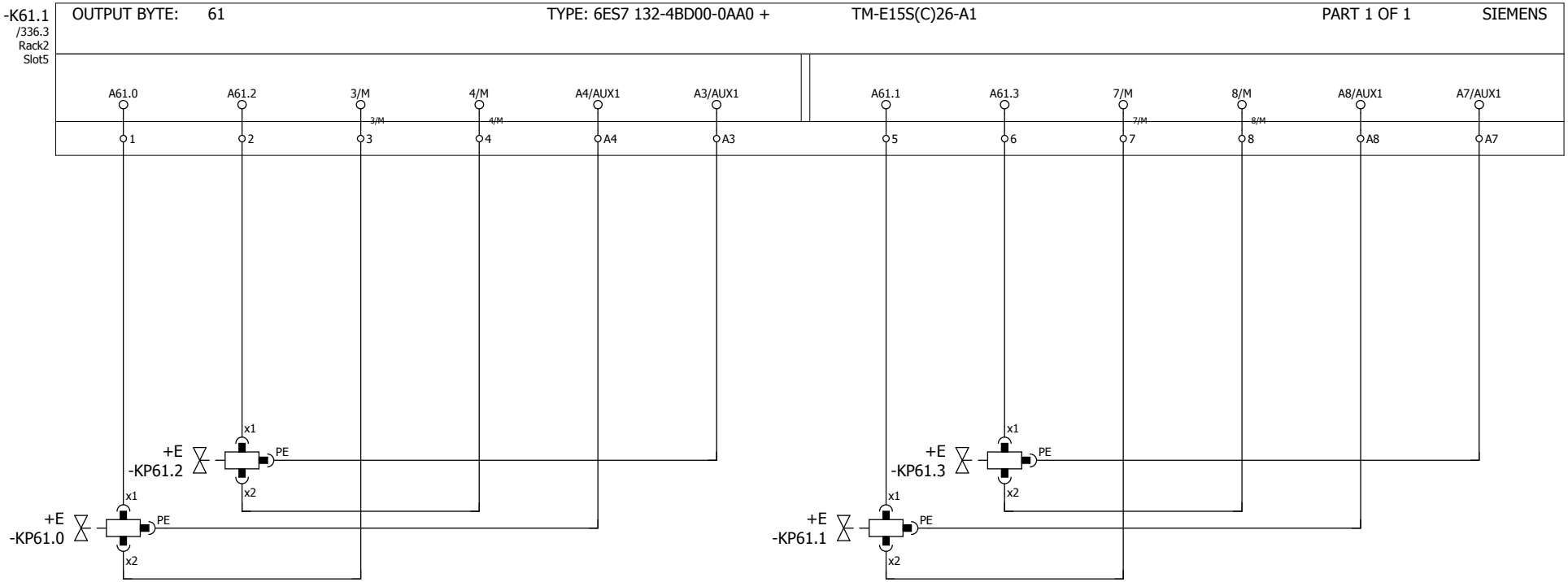

Magnetventil
Strahlmittel
Schleuderrad 1

Solenoid valve
blasting
media blasting wheel 1

Magnetventil
Strahlmittel
Schleuderrad 3

Solenoid valve
blasting
media blasting wheel 3

Magnetventil
Strahlmittel
Schleuderrad 2

Solenoid valve
blasting
media blasting wheel 2

Magnetventil
Strahlmittel
Schleuderrad 4

Solenoid valve
blasting
media blasting wheel 4

Duferco Clabecq

Management codes				Document identification				
5.3.0.0	CE	000	DW	QTPC	L04	ROSL	D	0049
System	Phase	Area	Typology	Project	Lot	Company	D/S	Number

338 340

Rev.	Date	Description	Prepared	Checked	Approved	Date 30.01.2012	Duferco (SBM 2) Schaltschrank	
						Dus	in place of	Replaced by

RÖSLER finding a better way ...

Control AB
61

= ES
+ S

01-130070 00

Page 339
from 565

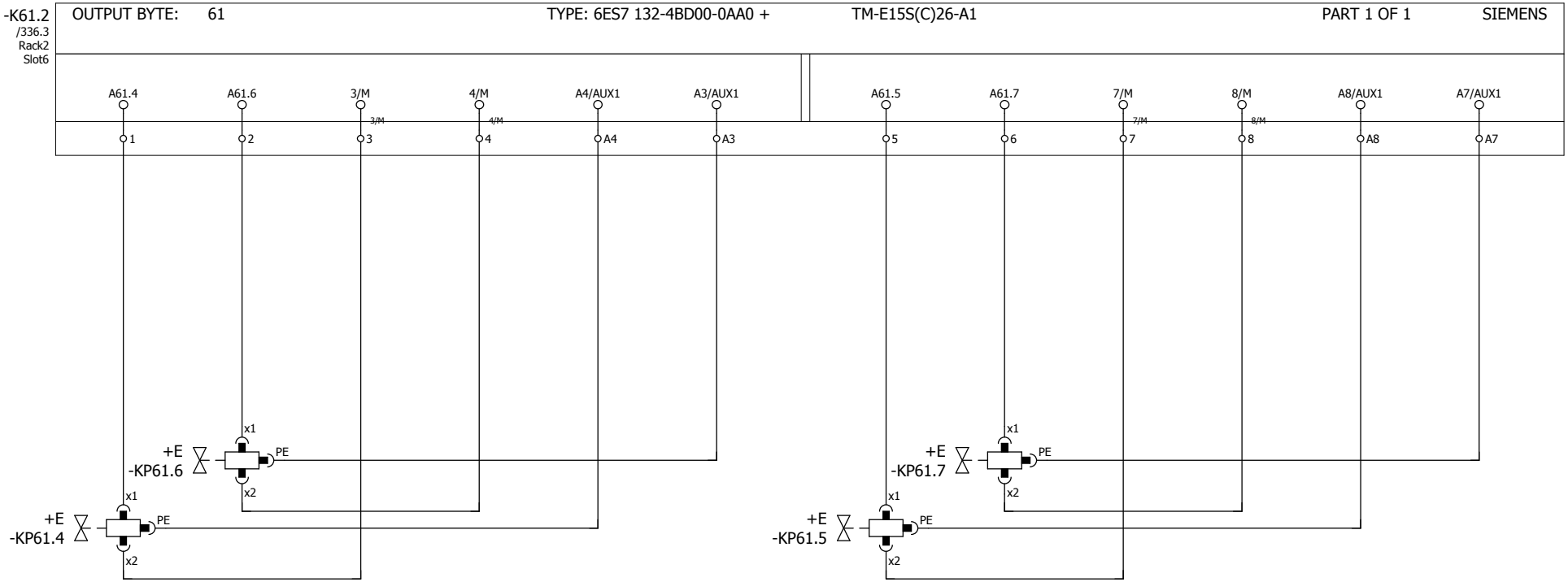

Magnetventil
Strahlmittel
Schleuderrad 5

Solenoid valve
blasting
media blasting wheel 5

Magnetventil
Strahlmittel
Schleuderrad 7

Solenoid valve
blasting
media blasting wheel 7

Magnetventil
Strahlmittel
Schleuderrad 6

Solenoid valve
blasting
media blasting wheel 6

Magnetventil
Strahlmittel
Schleuderrad 8

Solenoid valve
blasting
media blasting wheel 8

Duferco Clabecq

Management codes				Document identification				
5.3.0.0	CE	000	DW	QTPC	L04	ROSL	D	0049
System	Phase	Area	Typology	Project	Lot	Company	D/S	Number

Rev.	Date	Description	Prepared	Checked	Approved			
						Date	30.01.2012	
						Dus		

Duferco (SBM 2) Schaltschrank

in place of | Replaced by

RÖSLER finding a better way ...

Control AB
61

= ES
+ S

01-130070 00

-K62.1
/336.3
Rack2
Slot7

OUTPUT BYTE: 62 TYPE: 6ES7 132-4BD00-0AA0 + TM-E15S(C)26-A1 PART 1 OF 1 SIEMENS

A62.0	A62.2	3/M	4/M	A4/AUX1	A3/AUX1	A62.1	A62.3	7/M	8/M	A8/AUX1	A7/AUX1
1	2	3 (3/M)	4 (4/M)	A4	A3	5	6	7 (7/M)	8 (8/M)	A8	A7

Reserve Reserve Reserve Reserve

reserve reserve reserve reserve

Duferco Clabecq

Management codes				Document identification				
5.3.0.0	CE	000	DW	QTPC	L04	ROSL	D	0049
System	Phase	Area	Typology	Project	Lot	Company	D/S	Number

Rev.	Date	Description	Prepared	Checked	Approved	Date 30.01.2012 Dus	Duferco (SBM 2) Schaltschrank	
							in place of	Replaced by

RÖSLER finding a better way ...

Control AB
62

= ES
+ S

01-130070 00

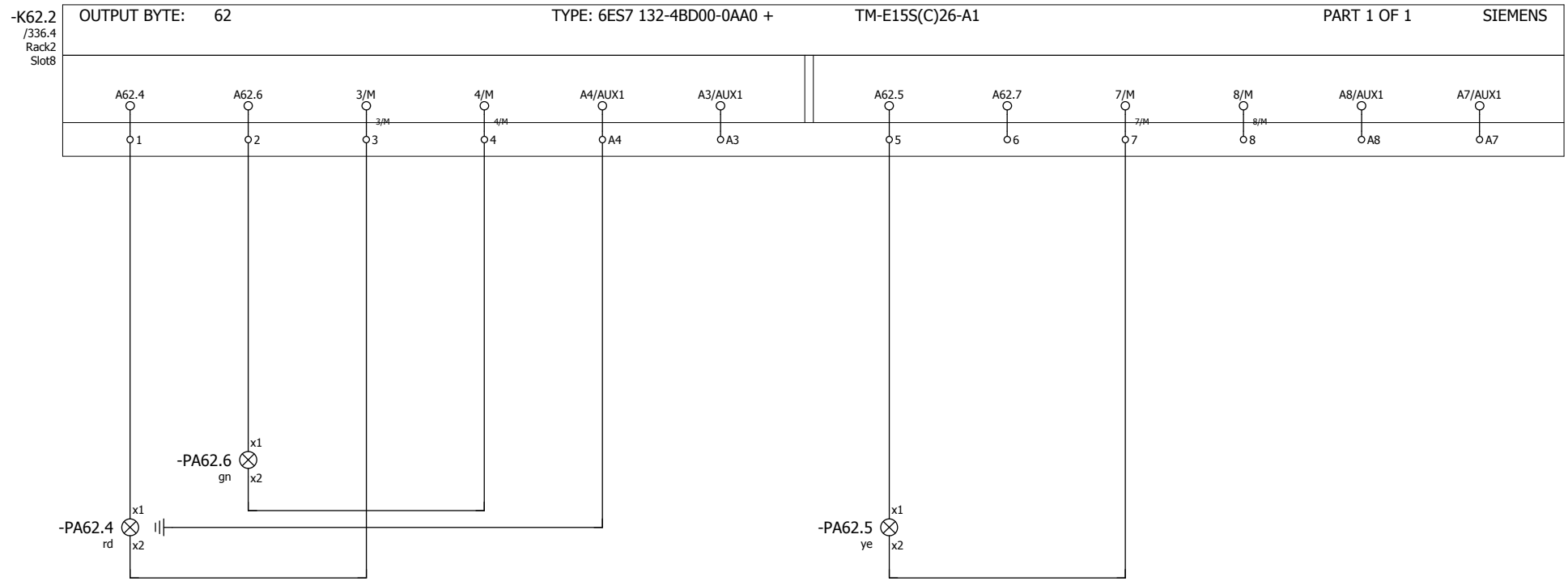

Leuchsäule Störung Strahlanlage	Leuchtsäule Anlage läuft	Leuchtsäule Bediener anfordern	Reserve reserve
luminous column malfunction blasting inst.	luminous column system run	luminous column operator require	

Duferco Clabecq

Management codes				Document identification				
5.3.0.0	CE	000	DW	QTPC	L04	ROSL	D	0049
System	Phase	Area	Typology	Project	Lot	Company	D/S	Number

Rev.	Date	Description	Prepared	Checked	Approved	Date 30.01.2012 Dus	Duferco (SBM 2) Schaltschrank in place of	Replaced by

RÖSLER finding a better way ...

Control AB
62

= ES
+ S

01-130070 00

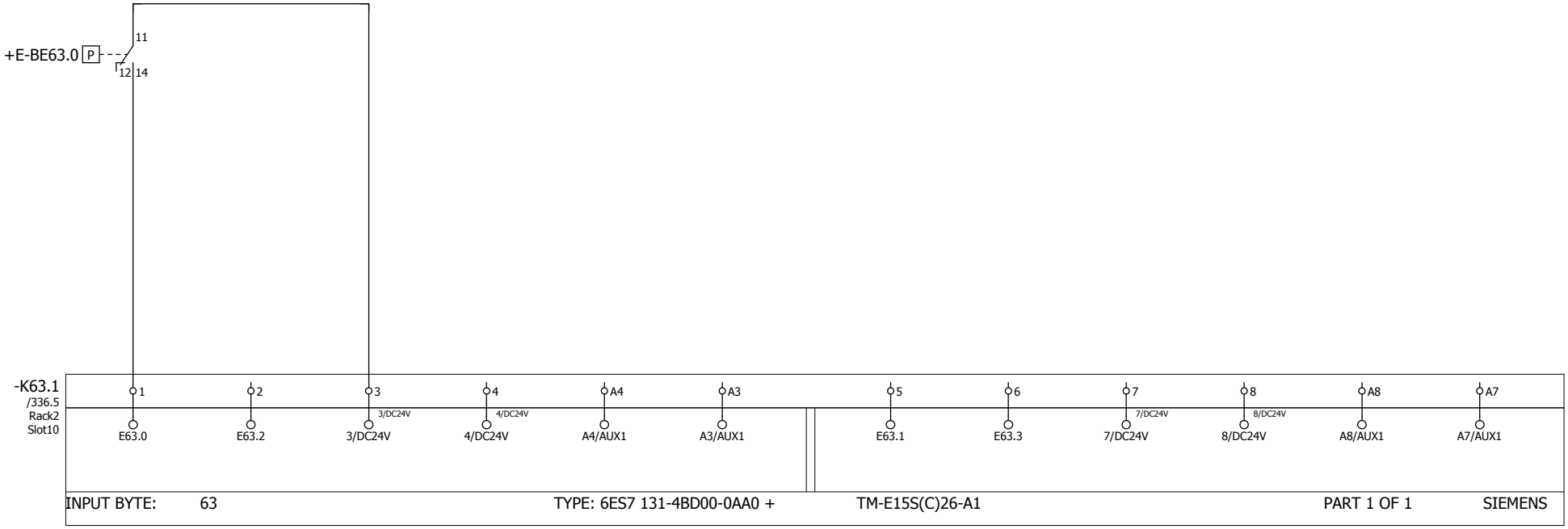

Druckschalter Luft pressure switch air	Reserve reserve	Reserve reserve	Reserve reserve

Duferco Clabecq

Management codes				Document identification				
5.3.0.0	CE	000	DW	QTPC	L04	ROSL	D	0049
System	Phase	Area	Typology	Project	Lot	Company	D/S	Number

Rev.	Date	Description	Prepared	Checked	Approved			
						Date	30.01.2012	
						Dus		
							Duferco (SBM 2) Schaltschrank	
							in place of	Replaced by

RÖSLER finding a better way ...

Control EB
63

= ES
+ S

01-130070 00

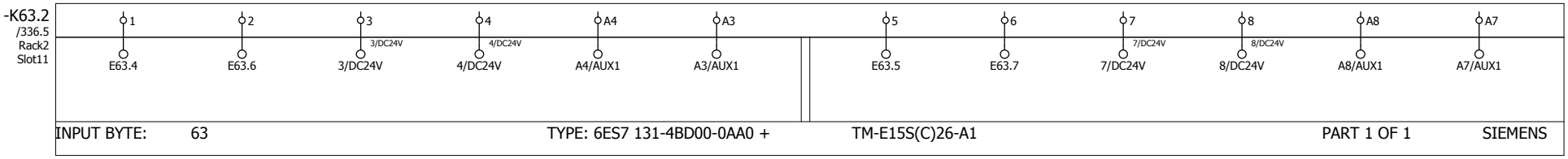

Reserve Reserve Reserve Reserve

reserve reserve reserve reserve

Duferco Clabecq

Management codes				Document identification				
5.3.0.0	CE	000	DW	QTPC	L04	ROSL	D	0049
System	Phase	Area	Typology	Project	Lot	Company	D/S	Number

Rev.	Date	Description	Prepared	Checked	Approved			
						Date	30.01.2012	
						Dus		
							Duferco (SBM 2) Schaltschrank	
							in place of	Replaced by

RÖSLER finding a better way ...

Control EB
63

= ES
+ S

01-130070 00

Strahlanlage XL12
blasting system XL12

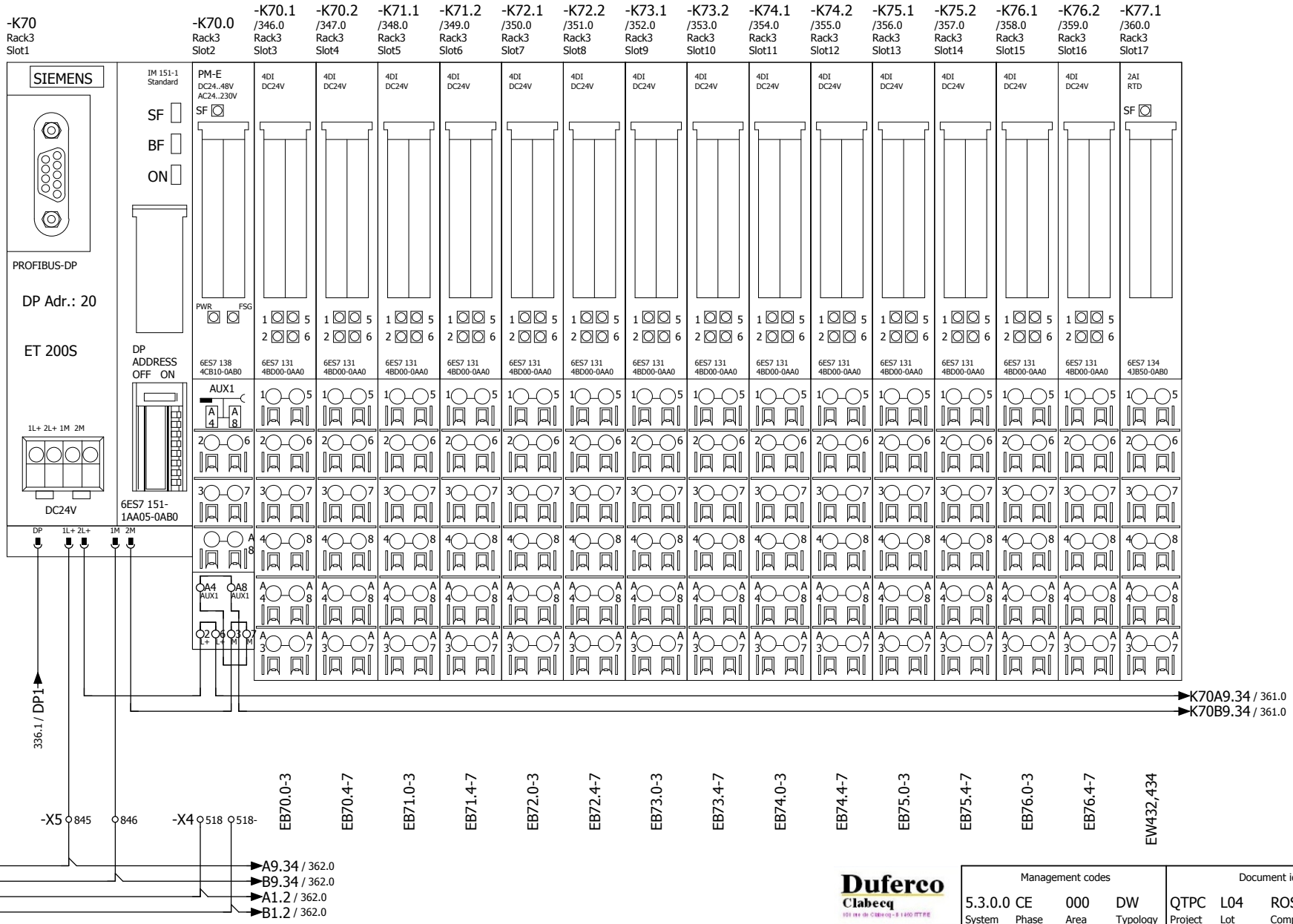

344

Duferco Clabecq

Management codes				Document identification				
5.3.0.0	CE	000	DW	QTPC	L04	ROSL	D	0049
System	Phase	Area	Typology	Project	Lot	Company	D/S	Number

346

Rev.	Date	Description	Prepared	Checked	Approved			
						Date	30.01.2012	
						Dus		

Duferco (SBM 2) Schaltschrank

in place of | Replaced by

RÖSLER finding a better way ...

Control erection PLC
ET 200S blasting system

= ES
+ S

01-130070 00

Page 345
from 565

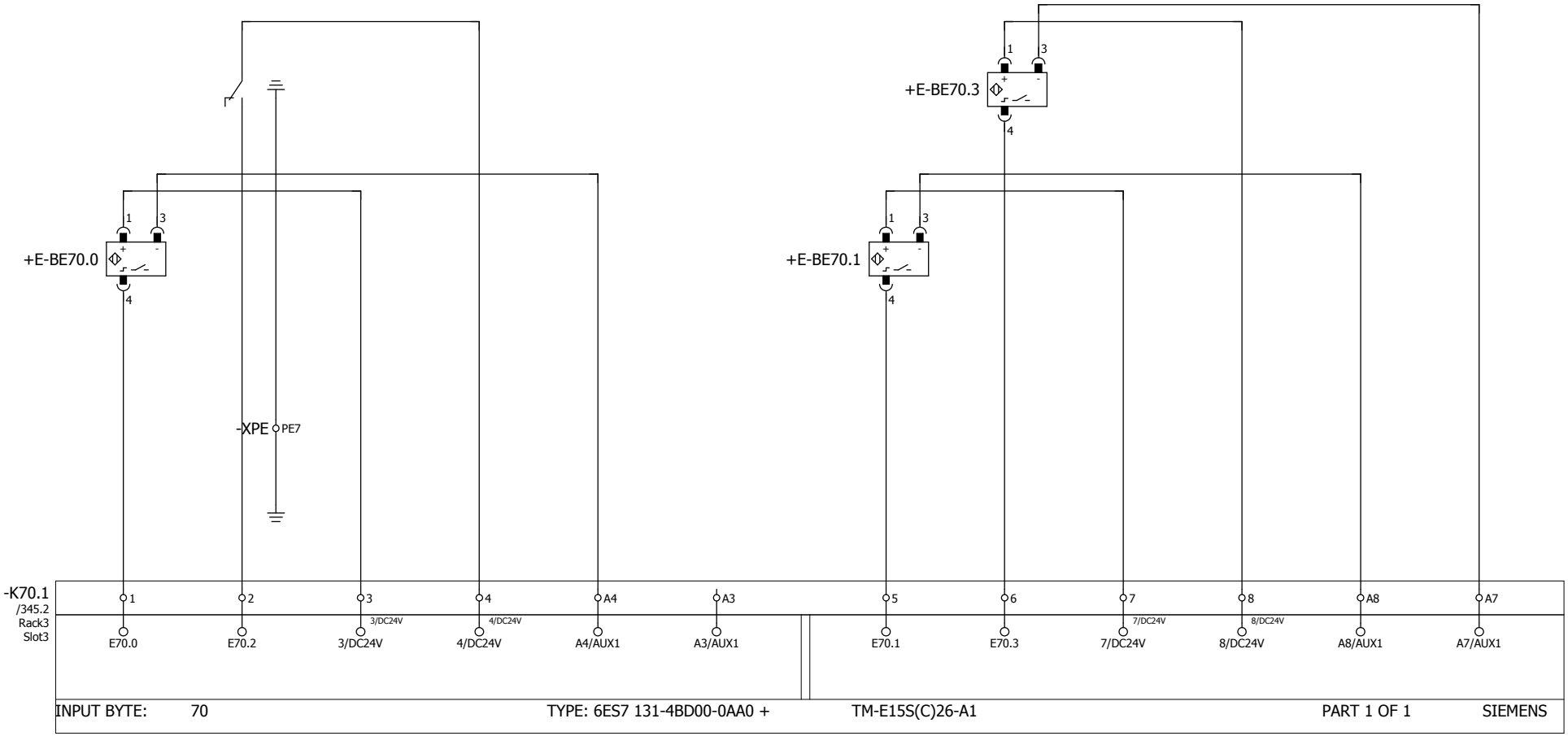

Initiator
Strahlmittel
Leer
Behälter Oben

sensor
blasting media
empty
vessel above

Rückmeldung
Filter Steuerung
0= Störung 1

feedback
Filter Control 0=
fault 1

Initiator
Strahlmittel
nachfüllen

initiator
blast media
refilling

Initiator
Drehüberwachung
Becherwerk

initiator
rotation check
bucket plant

Duferco Clabecq

Management codes				Document identification				
5.3.0.0	CE	000	DW	QTPC	L04	ROSL	D	0049
System	Phase	Area	Typology	Project	Lot	Company	D/S	Number

Rev.	Date	Description	Prepared	Checked	Approved			
						Date	30.01.2012	
						Dus		

Duferco (SBM 2) Schaltschrank

in place of | Replaced by

RÖSLER finding a better way ...

Control EB
70

= ES
+ S

01-130070 00

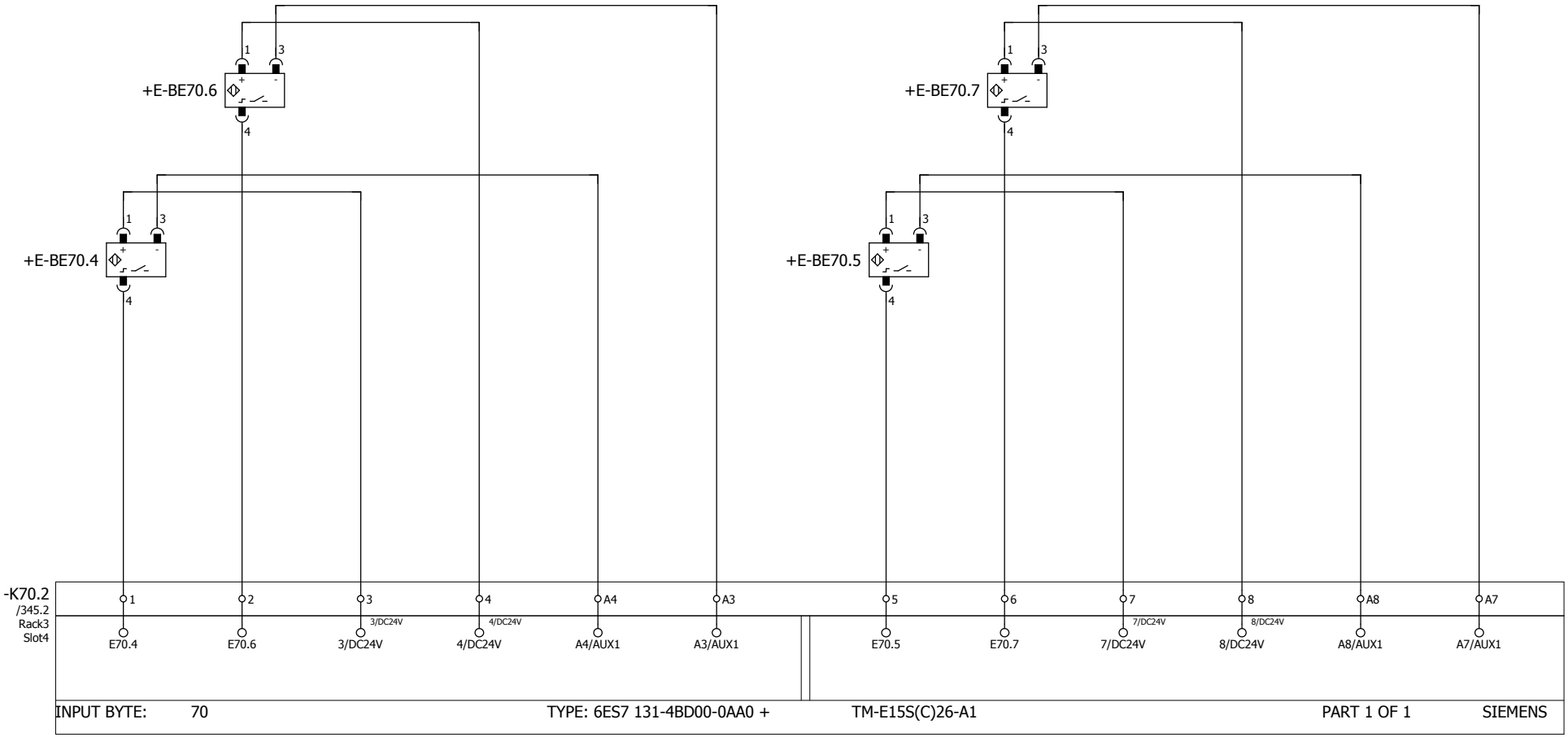

Initiator
Drehüberwachung
Rollenbahn
Strahlanlage
Anfang

sensor
rotation surveillance
roll
conveyor blasting
system start

Initiator
Klappsieb
Grundstellung

sensor
pivoting sieve
ground position

Initiator
Drehüberwachung
Rollenbahn
Strahlanlage
Ende

sensor
rotation surveillance
roll
conveyor blasting
system end

Initiator
Klappsieb
Arbeitsstellung

sensor
pivoting sieve
treatment position

Duferco Clabecq

Management codes				Document identification				
5.3.0.0	CE	000	DW	QTPC	L04	ROSL	D	0049
System	Phase	Area	Typology	Project	Lot	Company	D/S	Number

346 348

Rev.	Date	Description	Prepared	Checked	Approved			
						Date	30.01.2012	
						Dus		
							in place of	Replaced by

Duferco (SBM 2) Schaltschrank

RÖSLER finding a better way ...

Control EB
70

= ES
+ S

01-130070 00

Page 347
from 565

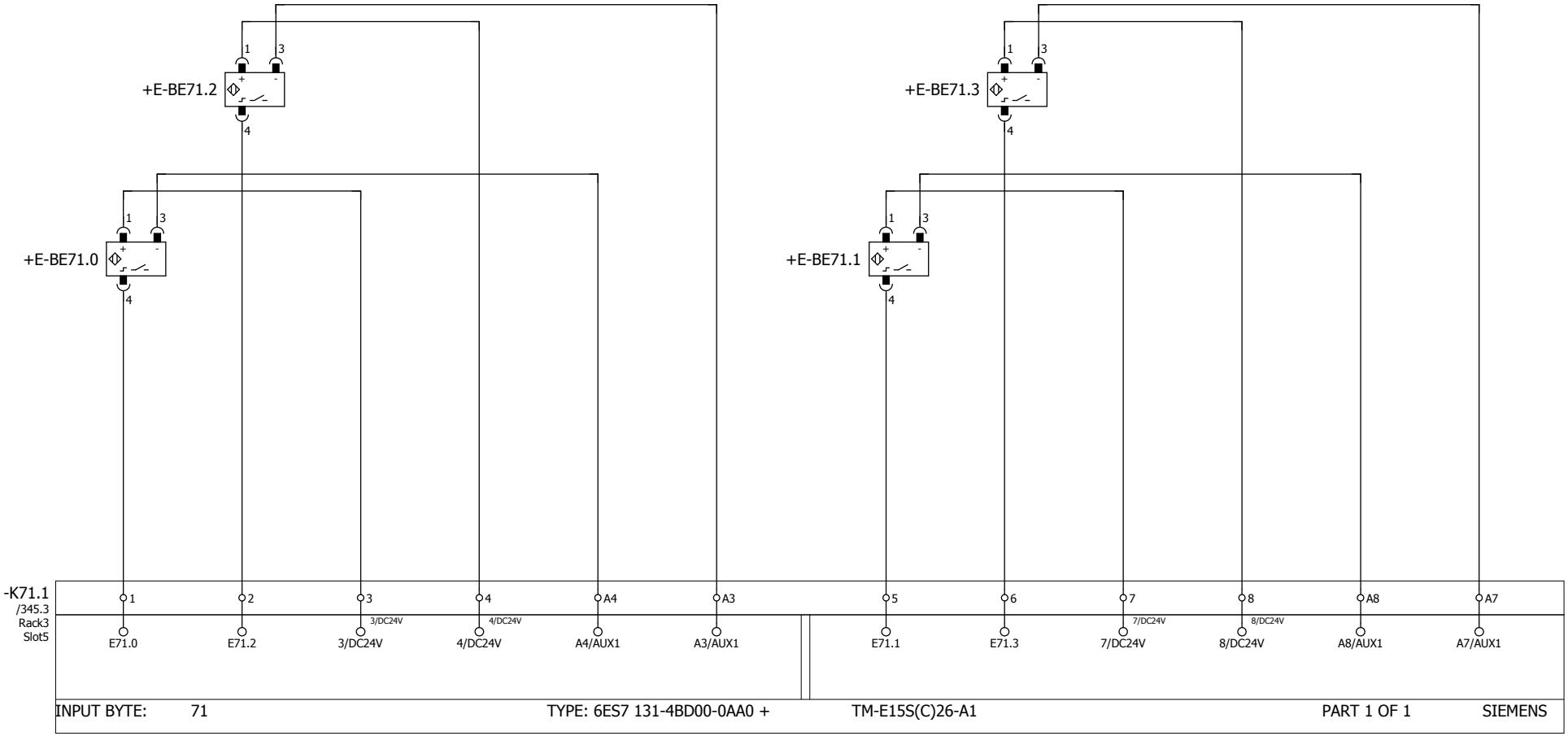

Initiator Klappgummi 1 Grundstellung	Initiator Klappgummi 2 Grundstellung	Initiator Klappgummi 1 Position	Initiator Klappgummi 2 Position
sensor tilting rubber 1 ground position	sensor tilting rubber 2 ground position	sensor tilting rubber 1 position	sensor tilting rubber 2 position

Duferco Clabecq

Management codes				Document identification				
5.3.0.0	CE	000	DW	QTPC	L04	ROSL	D	0049
System	Phase	Area	Typology	Project	Lot	Company	D/S	Number

347 349

Rev.	Date	Description	Prepared	Checked	Approved			
						Date	30.01.2012	
						Dus		
							Duferco (SBM 2) Schaltschrank	
							in place of	Replaced by

RÖSLER finding a better way ...

Control EB
71

= ES
+ S

01-130070 00

Page 348
from 565

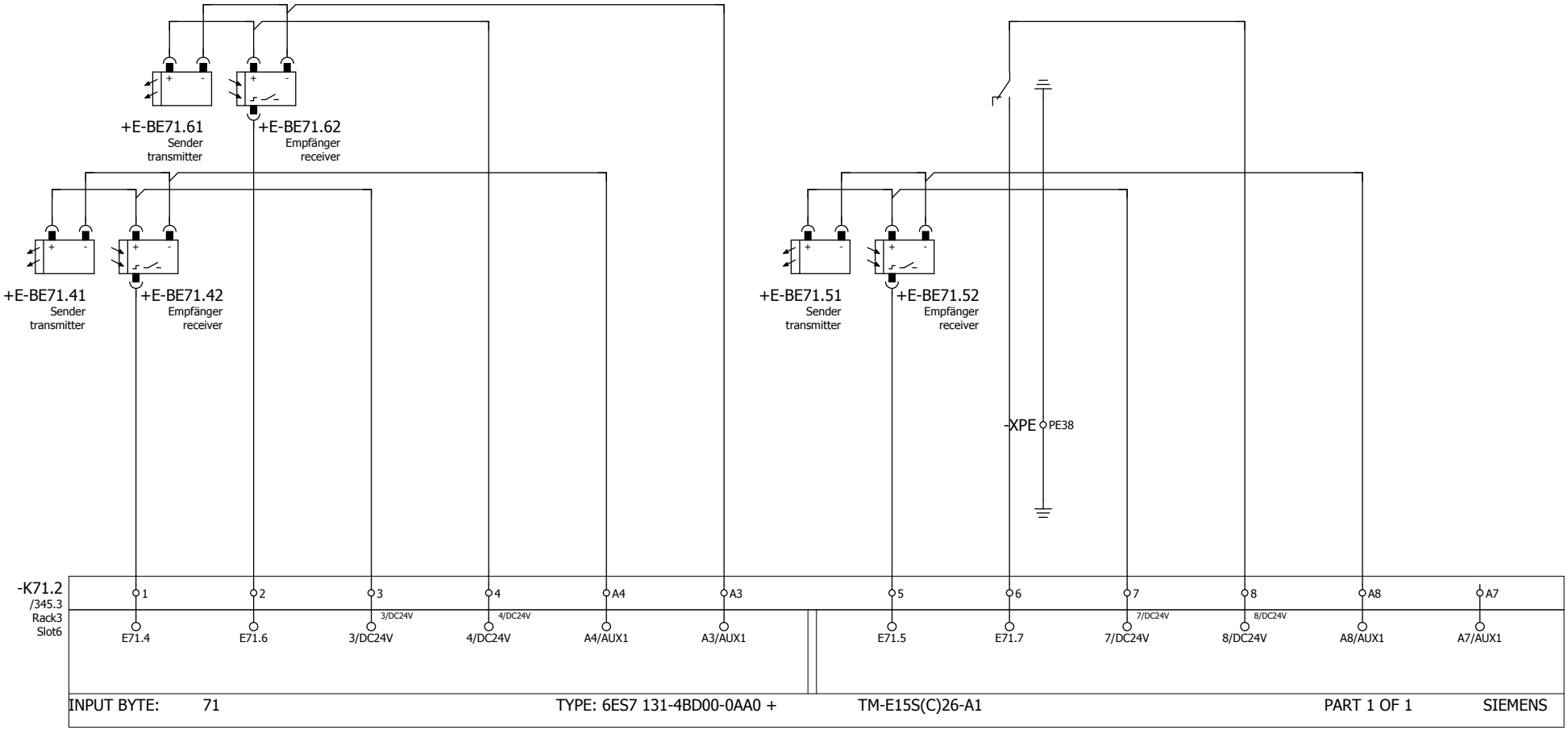

Lichtschranke
Erkennung Teile
vor Vorwärmer

Light barrier
identification
parts from preheater

Lichtschranke
Erkennung Teile
Reserve

Light barrier
identification
parts reserve

Lichtschranke
Erkennung Teile
Strahlen
Einlauf

Light barrier
identification
parts
blasting inlet

Rückmeldung
Filter Steuerung
0= Störung 2

feedback
Filter Control 0=
fault 2

Duferco Clabecq

Management codes				Document identification				
5.3.0.0	CE	000	DW	QTPC	L04	ROSL	D	0049
System	Phase	Area	Typology	Project	Lot	Company	D/S	Number

Rev.	Date	Description	Prepared	Checked	Approved			
						Date	30.01.2012	
						Dus		
							Duferco (SBM 2) Schaltschrank	
							in place of	Replaced by

RÖSLER finding a better way ...

Control EB
71

= ES
+ S

01-130070 00

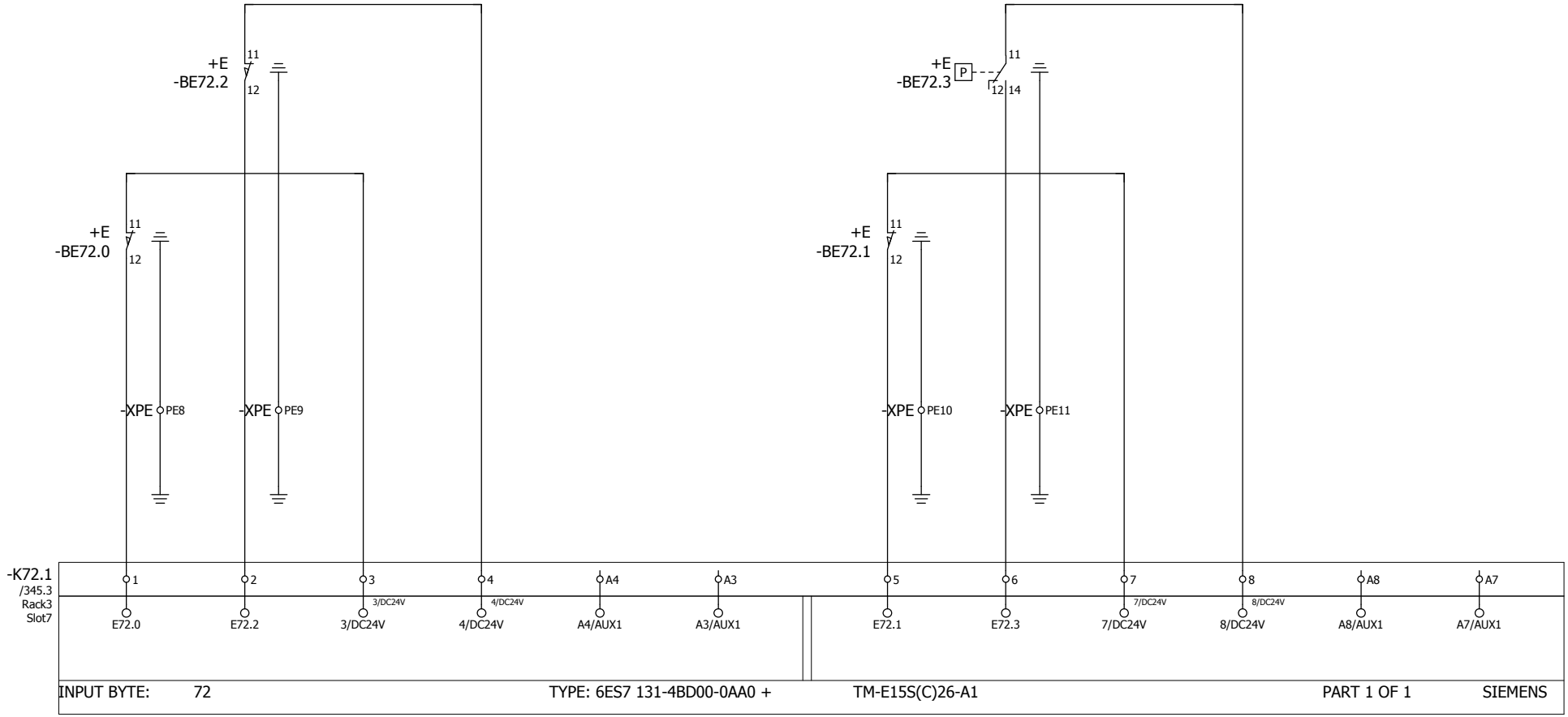

Endschalter Hubzylinder Bürste Grundstellung Unten

limit switch lifting cylinder brush ground position below

Endschalter Eingang Werkstück Reinigungsstation

limit switch Input Workpiece cleaning station

Endschalter Hubzylinder Bürste Position Oben

limit switch lifting cylinder brush position above

Differenzdruck Schalter Vorwärmer

Differential pressure switch preheater

Duferco Clabecq

Management codes				Document identification				
5.3.0.0	CE	000	DW	QTPC	L04	ROSL	D	0049
System	Phase	Area	Typology	Project	Lot	Company	D/S	Number

349 351

Rev.	Date	Description	Prepared	Checked	Approved			
						Date	30.01.2012	
						Dus		
							Duferco (SBM 2) Schaltschrank	
							in place of	Replaced by

RÖSLER finding a better way ...

Control EB
72

= ES
+ S

01-130070 00

Page 350
from 565

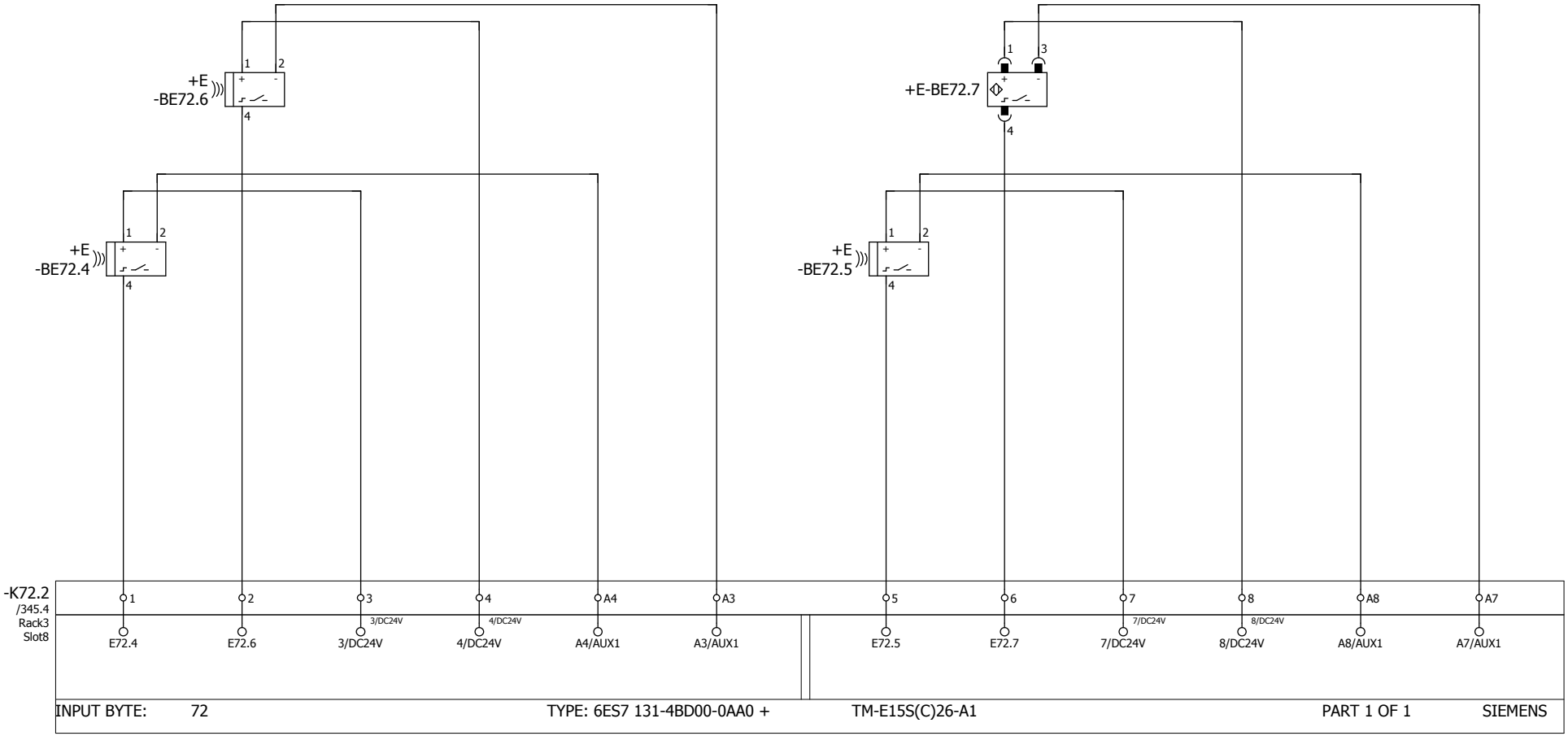

Ultraschallsensor links Erkennung Breite

ultrasonic sensor left identification Width

Ultraschallsensor rechts Erkennung Breite

ultrasonic sensor right identification Width

Ultraschallsensor Mitte Erkennung Breite

ultrasonic sensor center identification Width

Initiator Erkennung Teile Strahlen Einlauf

sensor identification parts blasting inlet

Duferco Clabecq

Management codes				Document identification				
5.3.0.0	CE	000	DW	QTPC	L04	ROSL	D	0049
System	Phase	Area	Typology	Project	Lot	Company	D/S	Number

Rev.	Date	Description	Prepared	Checked	Approved			
						Date	30.01.2012	
						Dus		

Duferco (SBM 2) Schaltschrank

in place of | Replaced by

RÖSLER finding a better way ...

Control EB
72

= ES
+ S

01-130070 00

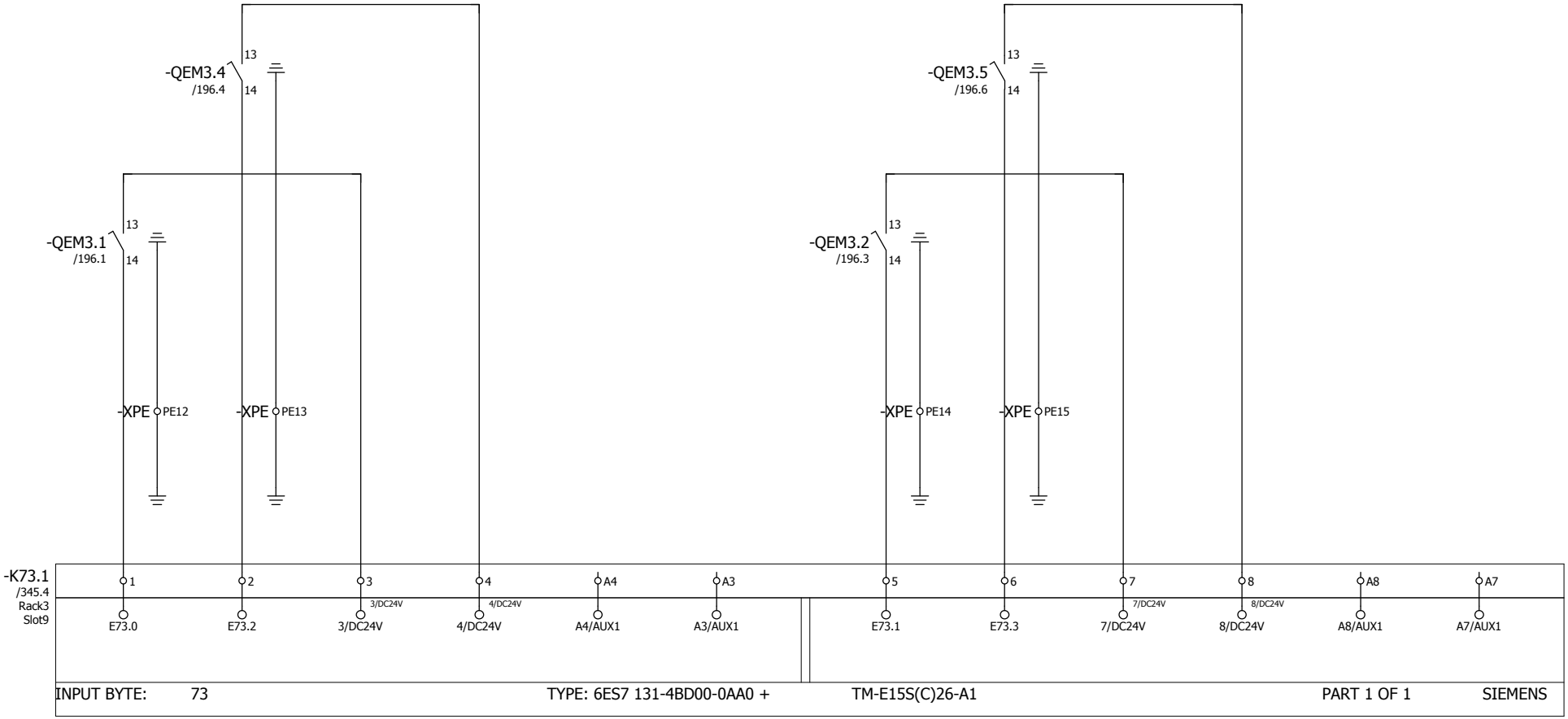

Wartungsschalter
Förderschnecke 1
Strahlanlage längs

maintenance switch
screw conveyor
1 blasting system lengthwise

Wartungsschalter
Förderschnecke
Strahlanlage quer unten

maintenance switch
screw conveyor
blasting system across below

Wartungsschalter
Förderschnecke 2
Strahlanlage längs

maintenance switch
screw conveyor
2 blasting system lengthwise

Wartungsschalter
Becherwerk

maintenance switch
bucket plant

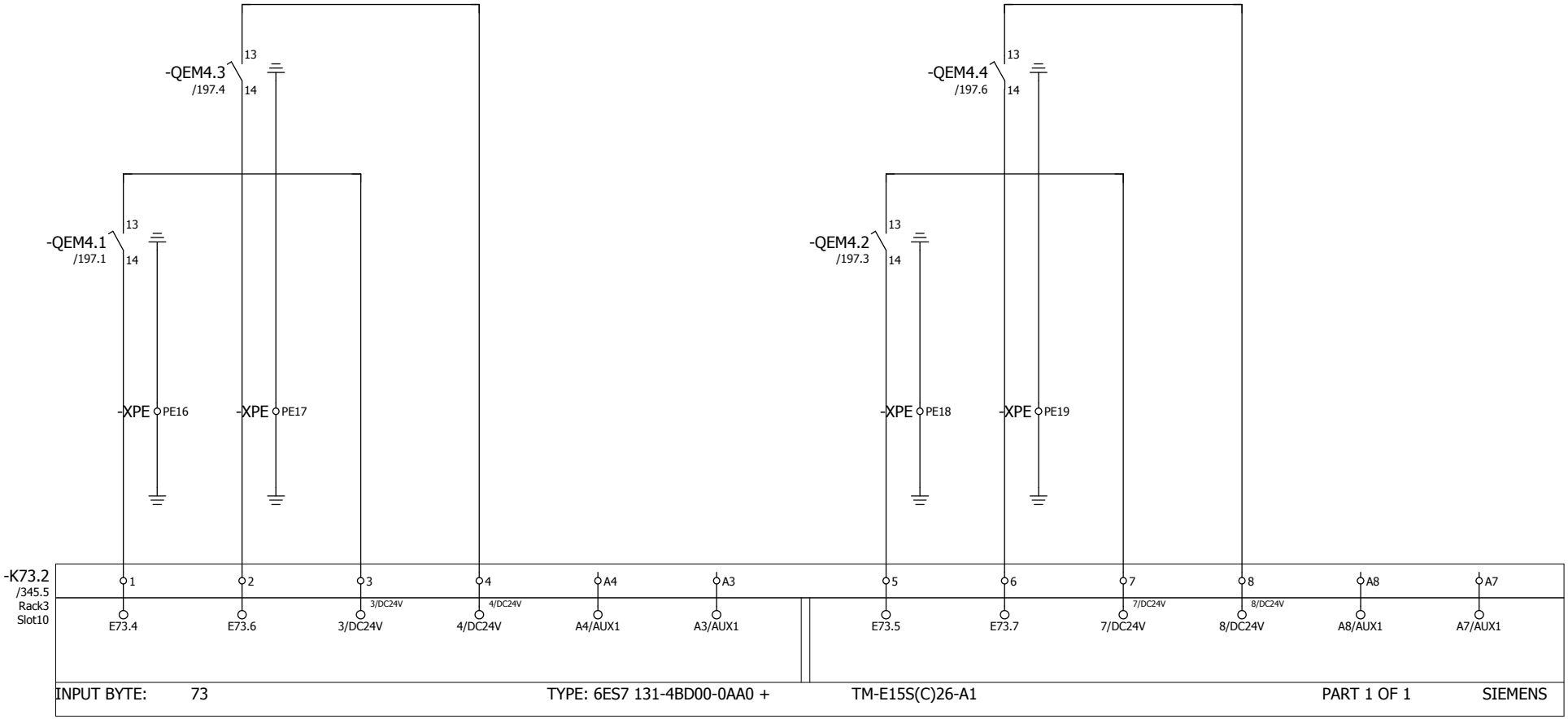

Wartungsschalter
Förderschnecke
Strahlmittel
Behälter

maintenance switch
screw conveyor
blasting
media vessel

Wartungsschalter
Förderschnecke
Staub

maintenance switch
screw conveyor
dust

Wartungsschalter
Förderschnecke
Versorgung
Schleuderrad
unten

maintenance switch
screw conveyor
supply
blasting wheel
below

Wartungsschalter
Förderschnecke
Strahlanlage
quer oben

maintenance switch
screw conveyor
blasting
system across above

Duferco Clabecq

Management codes				Document identification				
5.3.0.0	CE	000	DW	QTPC	L04	ROSL	D	0049
System	Phase	Area	Typology	Project	Lot	Company	D/S	Number

352 354

Rev.	Date	Description	Prepared	Checked	Approved	Date 30.01.2012	Duferco (SBM 2) Schaltschrank	
						Dus		
							in place of	Replaced by

RÖSLER finding a better way ...

Control EB
73

= ES
+ S

01-130070 00

Page 353
from 565

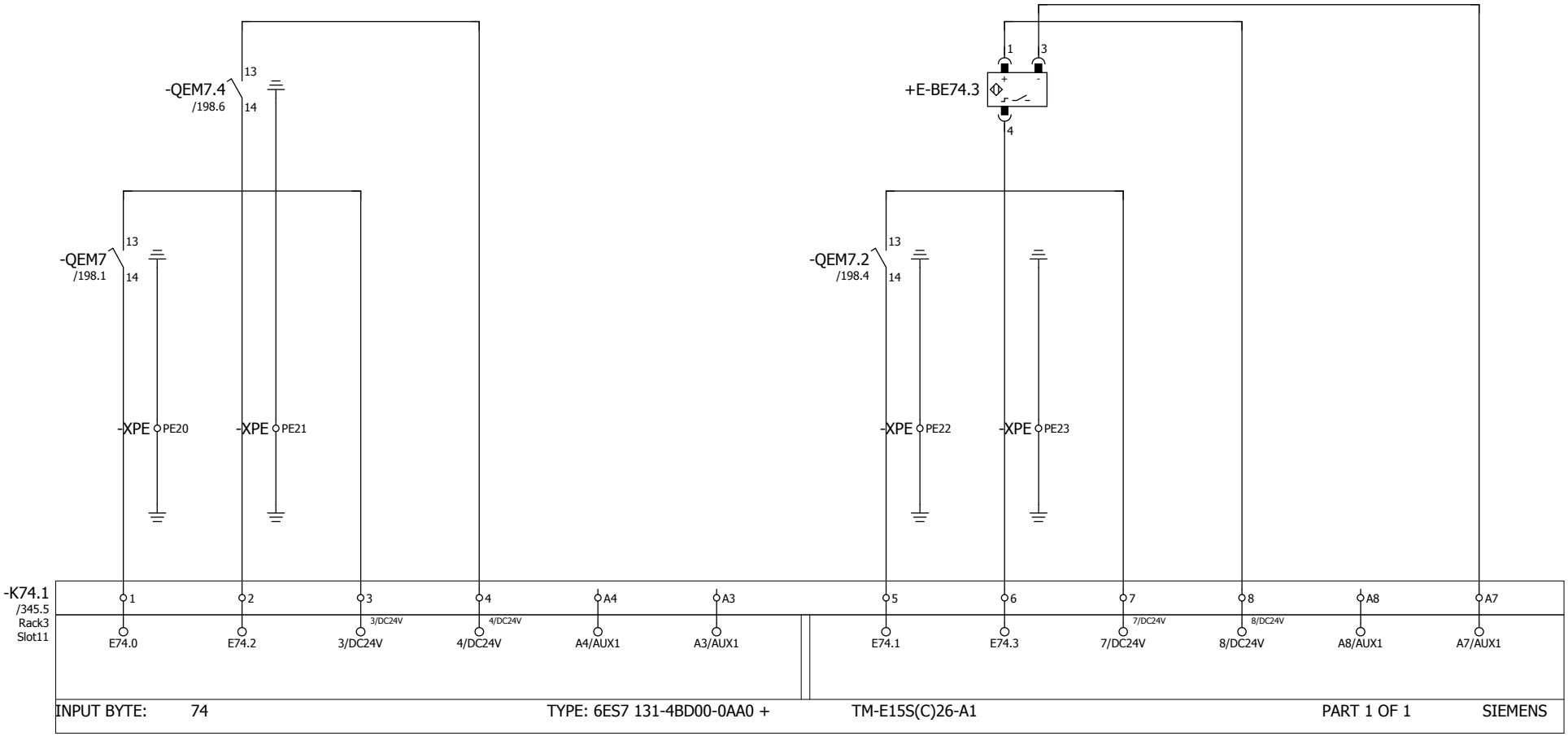

Wartungsschalter
Filter

maintenance switch
Filter

Wartungsschalter
Förderschnecke
Filter entleeren

maintenance switch
screw conveyor
Filter discharge

Wartungsschalter
Zellenradschleuse

maintenance switch
cell wheel gate

Initiator
Erkennung Teile
vor Vorwärmer

sensor
identification parts
in front of preheater

Duferco Clabecq

Management codes				Document identification				
5.3.0.0	CE	000	DW	QTPC	L04	ROSL	D	0049
System	Phase	Area	Typology	Project	Lot	Company	D/S	Number

Rev.	Date	Description	Prepared	Checked	Approved			
						Date	30.01.2012	
						Dus		

Duferco (SBM 2) Schaltschrank
in place of | Replaced by

RÖSLER finding a better way ...

Control EB
74

= ES
+ S

01-130070 00

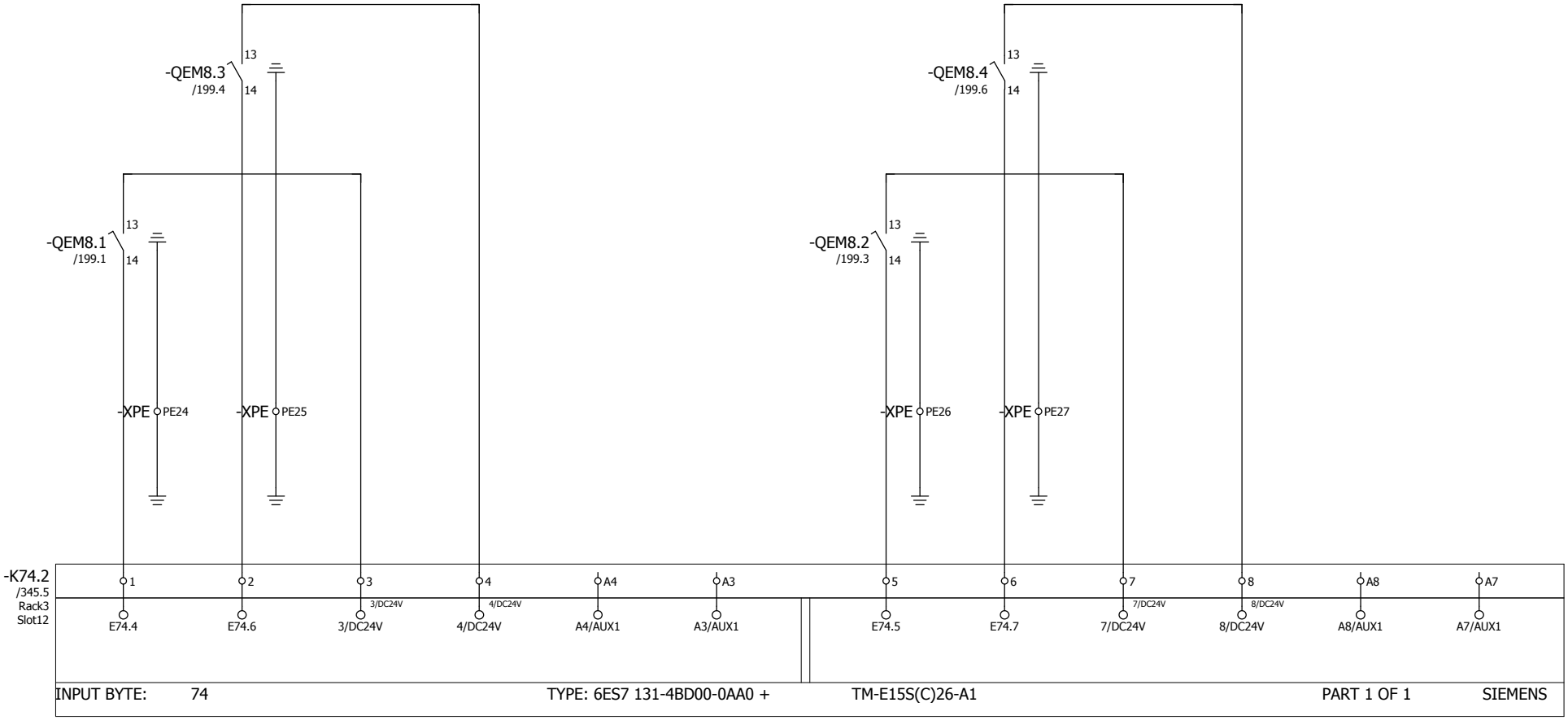

Wartungsschalter
Ventilator 1

maintenance switch
ventilator 1

Wartungsschalter
Bürste +
Förderschnecke

maintenance switch
brush +
screw conveyor

Wartungsschalter
Ventilator 2

maintenance switch
ventilator 2

Wartungsschalter
Höhenverstellung

maintenance switch
height adjustment

Duferco Clabecq

Management codes				Document identification				
5.3.0.0	CE	000	DW	QTPC	L04	ROSL	D	0049
System	Phase	Area	Typology	Project	Lot	Company	D/S	Number

354 356

Rev.	Date	Description	Prepared	Checked	Approved			
						Date	30.01.2012	
						Dus		

Duferco (SBM 2) Schaltschrank

in place of | Replaced by

RÖSLER finding a better way ...

Control EB
74

= ES
+ S

01-130070 00

Page 355
from 565

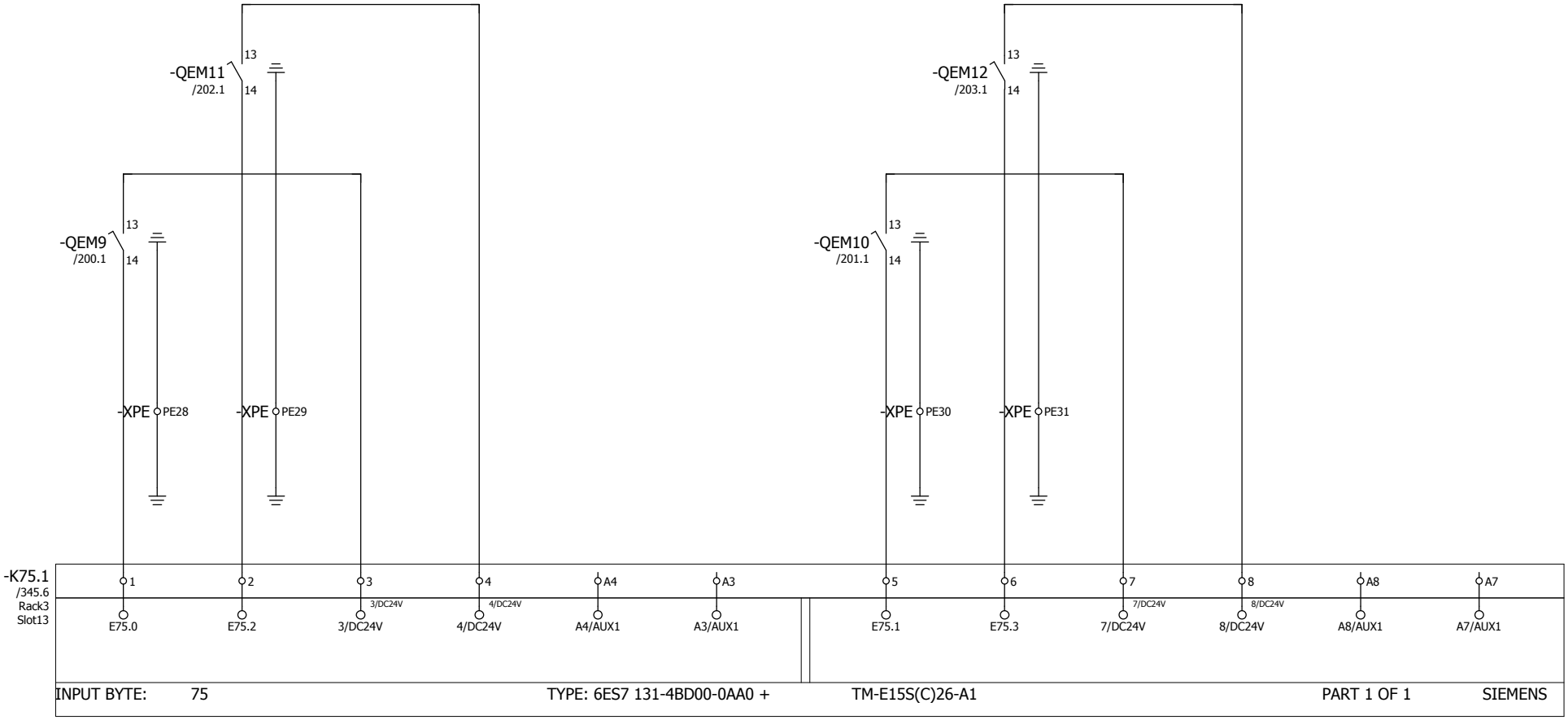

Wartungsschalter Schleuderrad 1

maintenance switch blasting wheel 1

Wartungsschalter Schleuderrad 3

maintenance switch blasting wheel 3

Wartungsschalter Schleuderrad 2

maintenance switch blasting wheel 2

Wartungsschalter Schleuderrad 4

maintenance switch blasting wheel 4

Duferco Clabecq

Management codes				Document identification				
5.3.0.0	CE	000	DW	QTPC	L04	ROSL	D	0049
System	Phase	Area	Typology	Project	Lot	Company	D/S	Number

Rev.	Date	Description	Prepared	Checked	Approved			
						Date	30.01.2012	
						Dus		
							in place of	Replaced by

Duferco (SBM 2) Schaltschrank

RÖSLER finding a better way ...

Control EB
75

= ES
+ S

01-130070 00

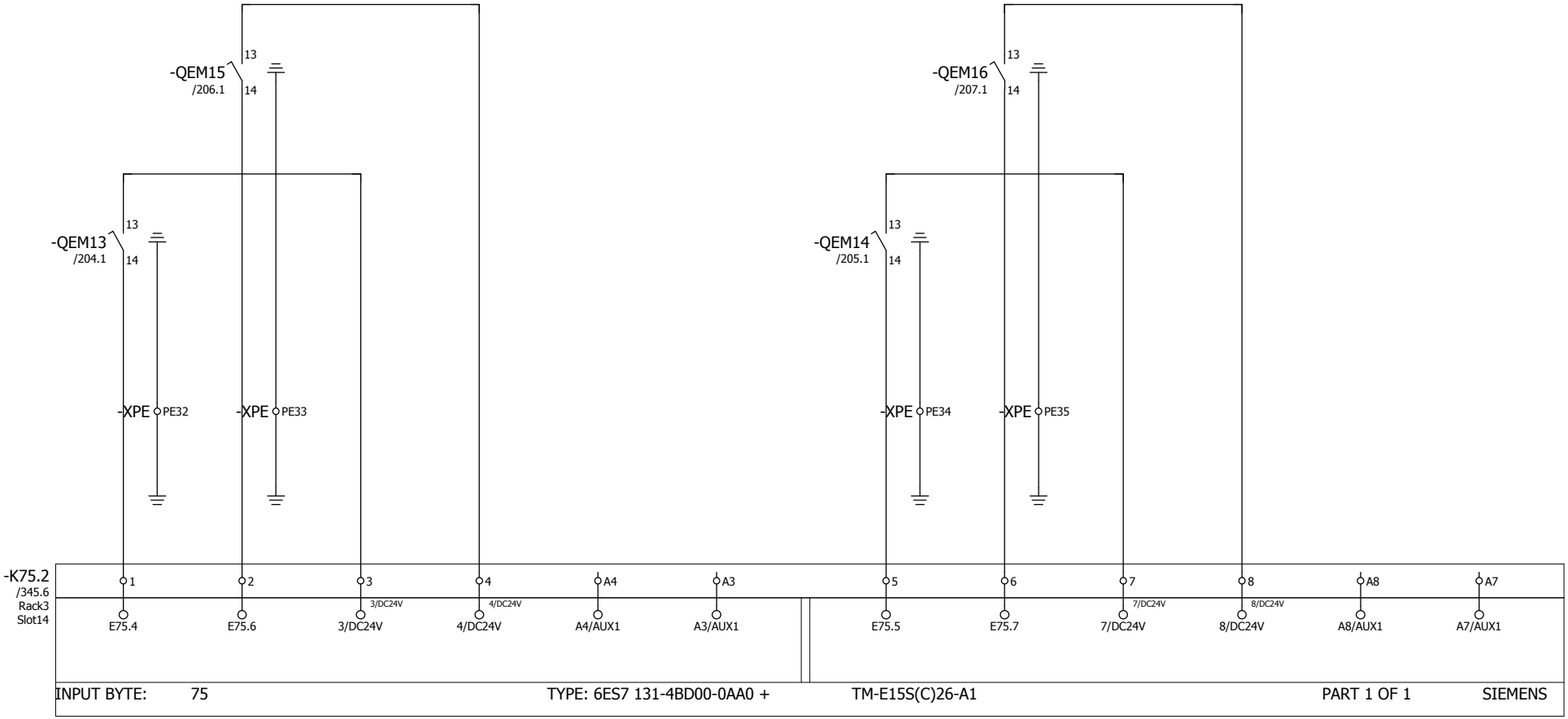

Wartungsschalter Schleuderrad 5

maintenance switch blasting wheel 5

Wartungsschalter Schleuderrad 7

maintenance switch blasting wheel 7

Wartungsschalter Schleuderrad 6

maintenance switch blasting wheel 6

Wartungsschalter Schleuderrad 8

maintenance switch blasting wheel 8

Duferco Clabecq

Management codes				Document identification				
5.3.0.0	CE	000	DW	QTPC	L04	ROSL	D	0049
System	Phase	Area	Typology	Project	Lot	Company	D/S	Number

Rev.	Date	Description	Prepared	Checked	Approved	Date 30.01.2012	Duferco (SBM 2) Schaltschrank	Control EB 75	= ES	Page 357
						Dus			+ S	from 565
							in place of	Replaced by	01-130070 00	

RÖSLER finding a better way ...

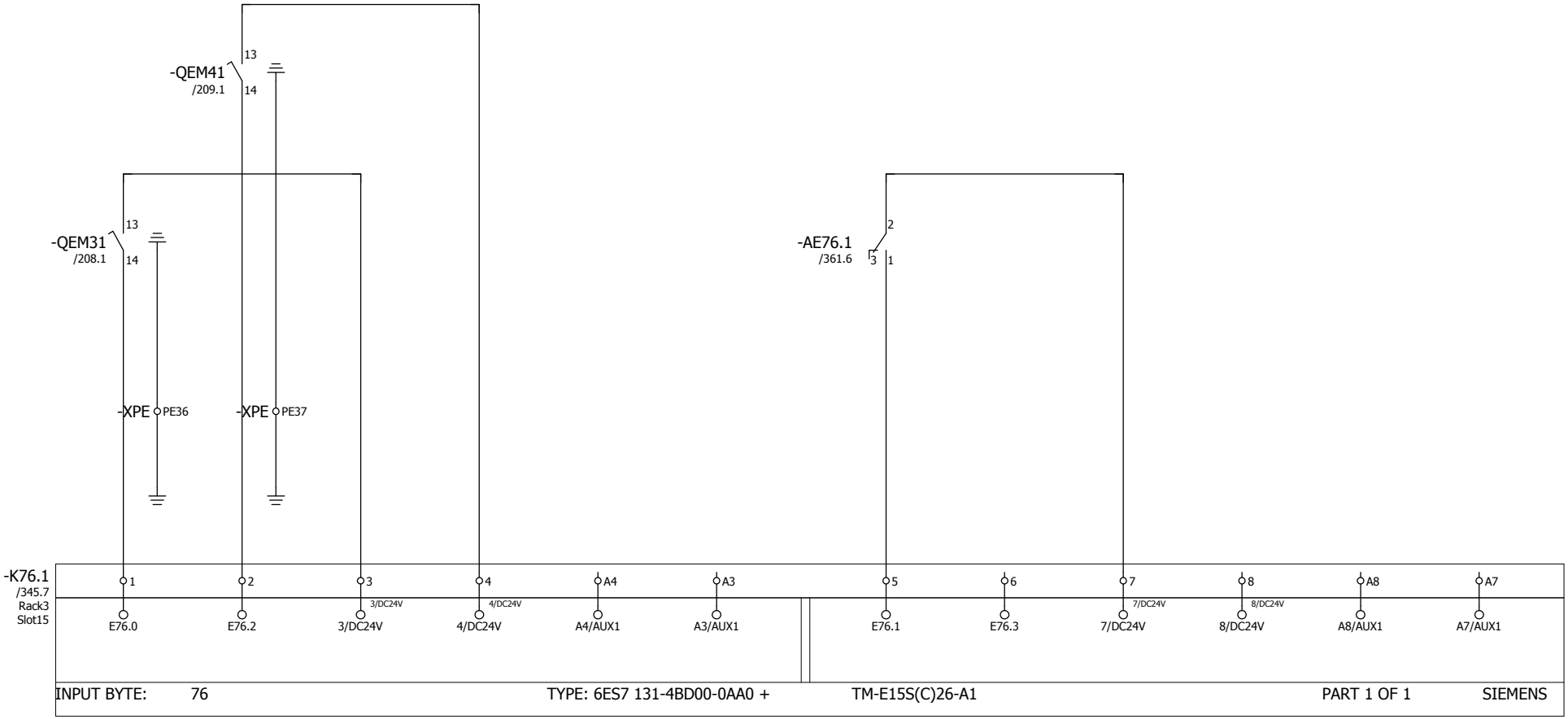

Wartungsschalter Ventilator Vorwärmer

maintenance switch ventilator preheater

Wartungsschalter Hydraulikaggregat

maintenance switch hydraulic aggregate

Impuls Gas Zähler

pulse gas Counter

Reserve

reserve

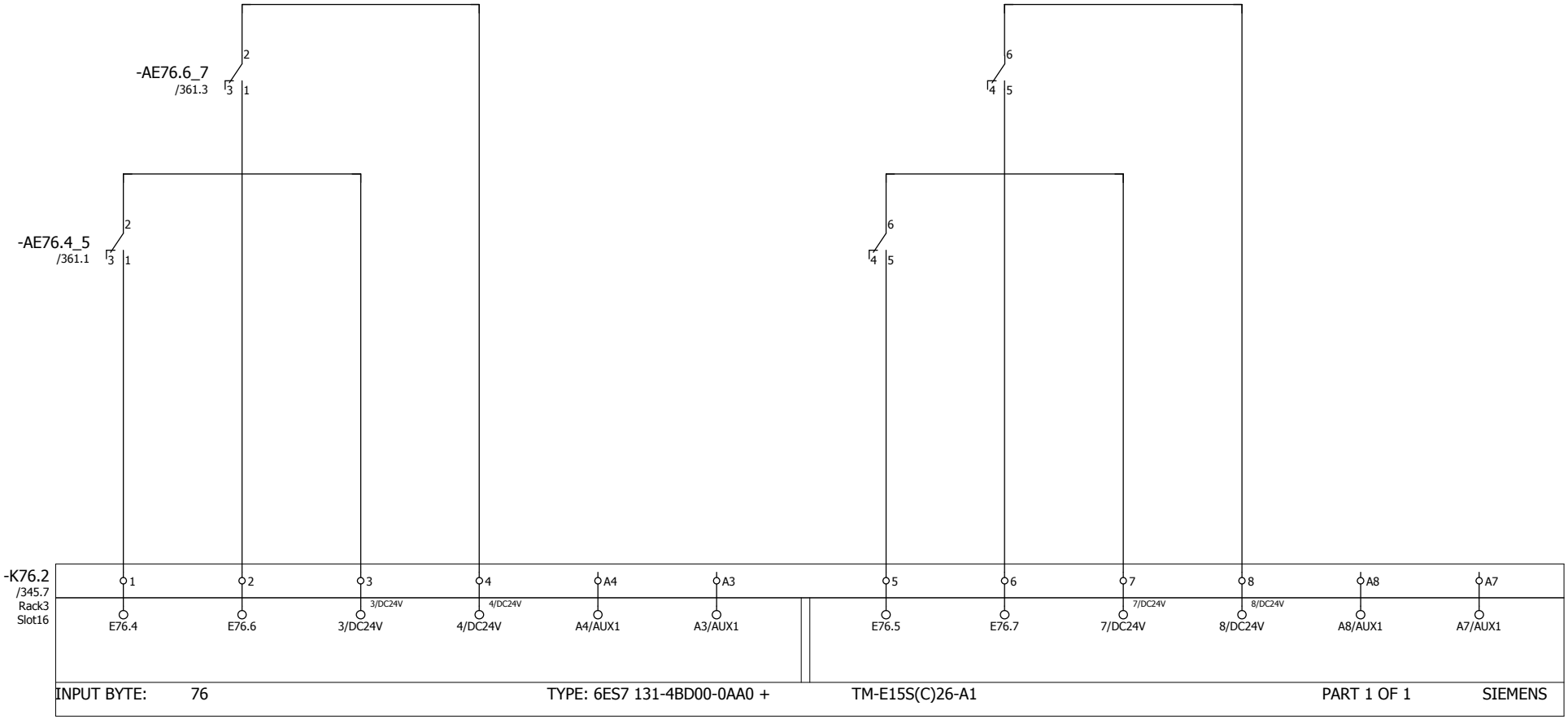

Initiator Rolle Grundstellung	Initiator Schwenkrolle Grundstellung	Initiator Rolle Position	Initiator Schwenkrolle Position
sensor roll ground position	sensor tilting roll ground position	sensor roll position	sensor tilting roll position

Duferco Clabecq

Management codes				Document identification				
5.3.0.0	CE	000	DW	QTPC	L04	ROSL	D	0049
System	Phase	Area	Typology	Project	Lot	Company	D/S	Number

Rev.	Date	Description	Prepared	Checked	Approved			
						Date	30.01.2012	
						Dus		
							Duferco (SBM 2) Schaltschrank	
							in place of	Replaced by

RÖSLER finding a better way ...

Control EB
76

= ES
+ S

01-130070 00

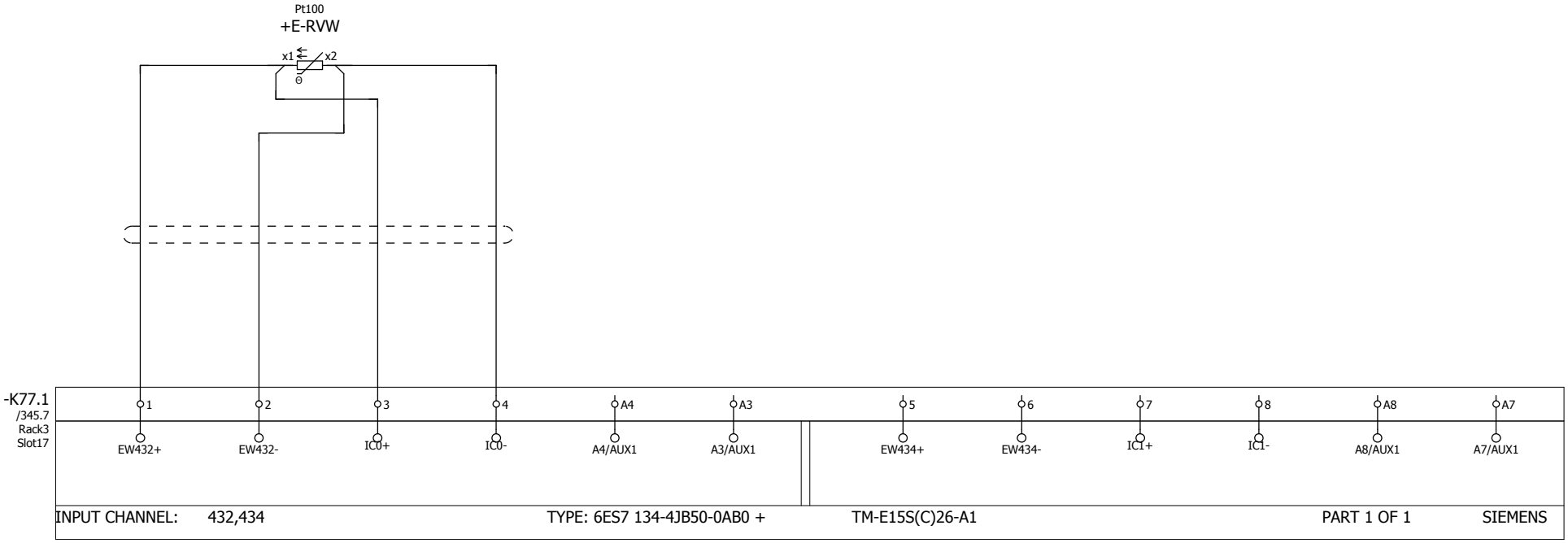

Temperaturfühler
Vorwärmer

temperature sensor
preheater

Reserve

reserve

Duferco Clabecq

Management codes				Document identification				
5.3.0.0	CE	000	DW	QTPC	L04	ROSL	D	0049
System	Phase	Area	Typology	Project	Lot	Company	D/S	Number

Rev.	Date	Description	Prepared	Checked	Approved			
						Date	30.01.2012	
						Dus		
							Duferco (SBM 2) Schaltschrank	
							in place of	Replaced by

RÖSLER finding a better way ...

= ES
+ S

01-130070 00

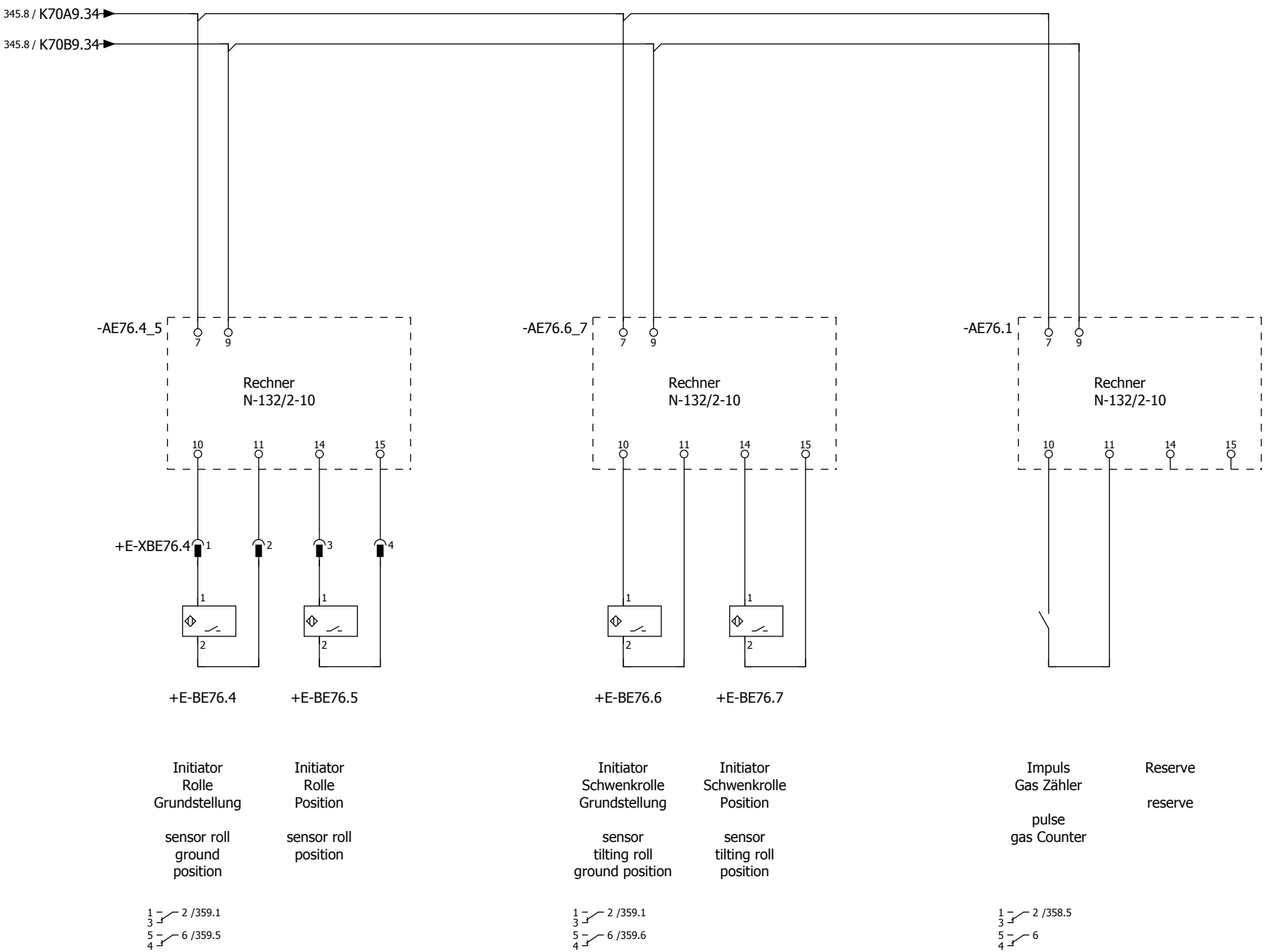

Duferco Clabecq

Management codes				Document identification				
5.3.0.0	CE	000	DW	QTPC	L04	ROSL	D	0049
System	Phase	Area	Typology	Project	Lot	Company	D/S	Number

360 362

Rev.	Date	Description	Prepared	Checked	Approved	Date 30.01.2012	Duferco (SBM 2) Schaltschrank	
						Dus		
						in place of	Replaced by	

RÖSLER finding a better way ...

Control
isolation amplifier

= ES
+ S

01-130070 00

Page 361
from 565

Rollenbahn TPC2 XL13
roll conveyor TPC2 XL13

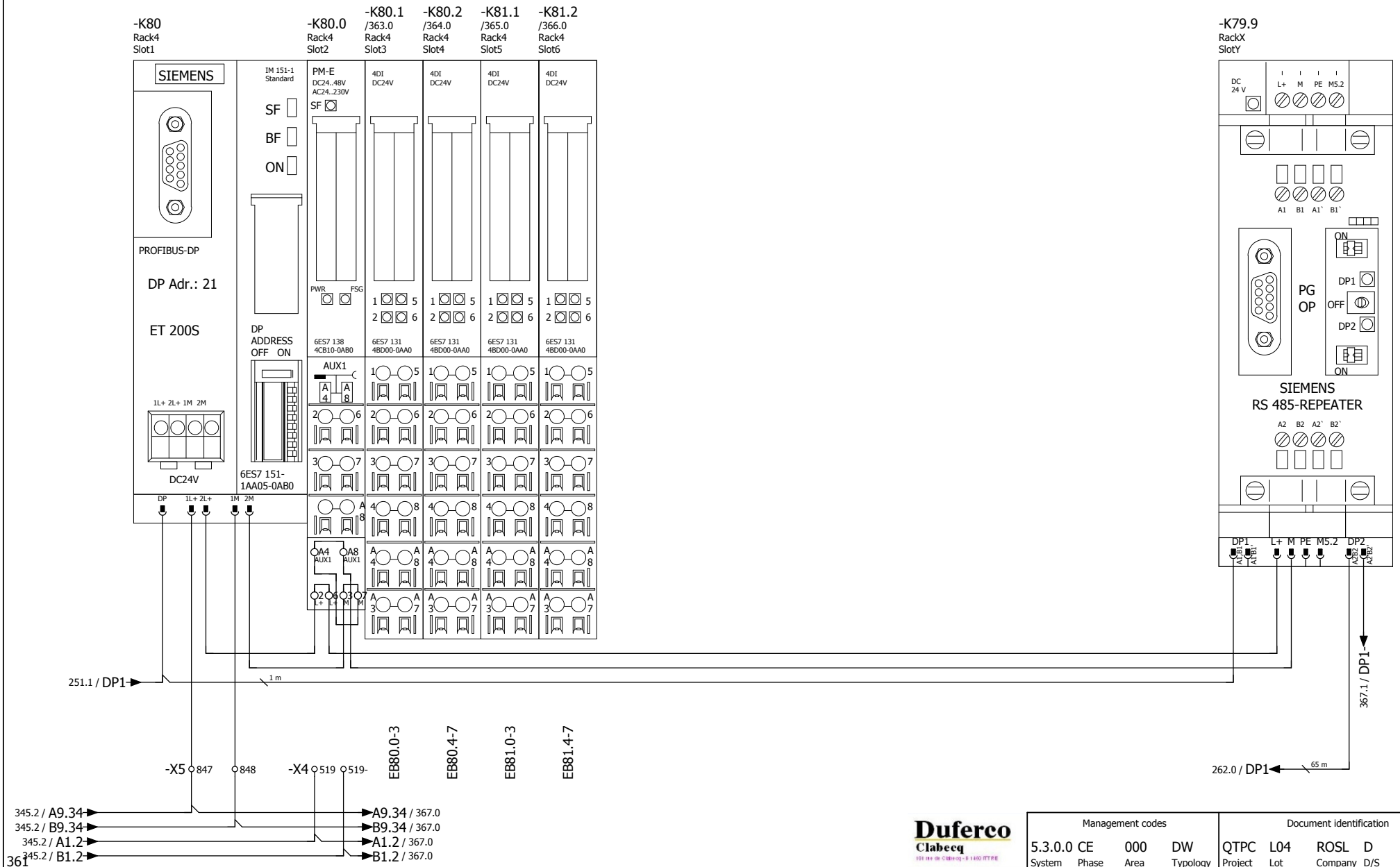

Management codes				Document identification				
5.3.0.0	CE	000	DW	QTPC	L04	ROSL	D	0049
System	Phase	Area	Typology	Project	Lot	Company	D/S	Number

Duferco Clabecq

361 363

Rev.	Date	Description	Prepared	Checked	Approved			
						Date	30.01.2012	
						Dus		

Duferco (SBM 2) Schaltschrank

in place of | Replaced by

RÖSLER finding a better way ...

Control erection PLC
ET 200S roll conveyor TPC2

= ES
+ S

01-130070 00

Page 362
from 565

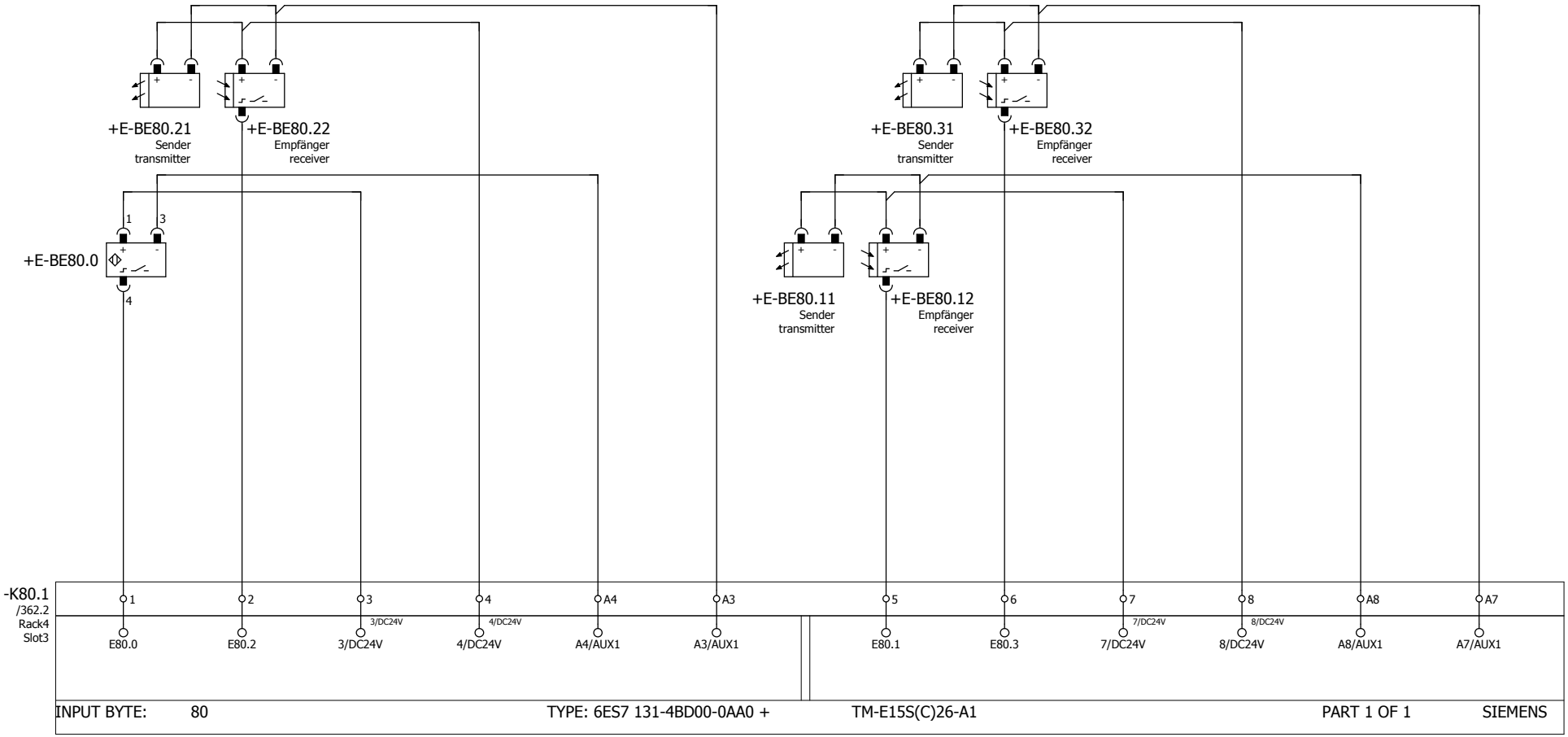

Initiator
Erkennung Teile
Segment 1

sensor
identification parts
segment 1

Lichtschranke
Erkennung Teile
Anfang
Rollenbahn 1 Einlauf

Light barrier
identification
parts start
roll conveyor 1 inlet

Lichtschranke
Reserve

Light barrier
reserve

Lichtschranke
Erkennung Teile
Ende
Rollenbahn 1 Einlauf

Light barrier
identification
parts
end roll conveyor 1 inlet

Duferco Clabecq

Management codes				Document identification				
5.3.0.0	CE	000	DW	QTPC	L04	ROSL	D	0049
System	Phase	Area	Typology	Project	Lot	Company	D/S	Number

Rev.	Date	Description	Prepared	Checked	Approved	Date 30.01.2012	Duferco (SBM 2) Schaltschrank	RÖSLER finding a better way ...	Control EB 80	= ES	01-130070 00	Page 363
						Dus				+ S		from 565
							in place of	Replaced by				

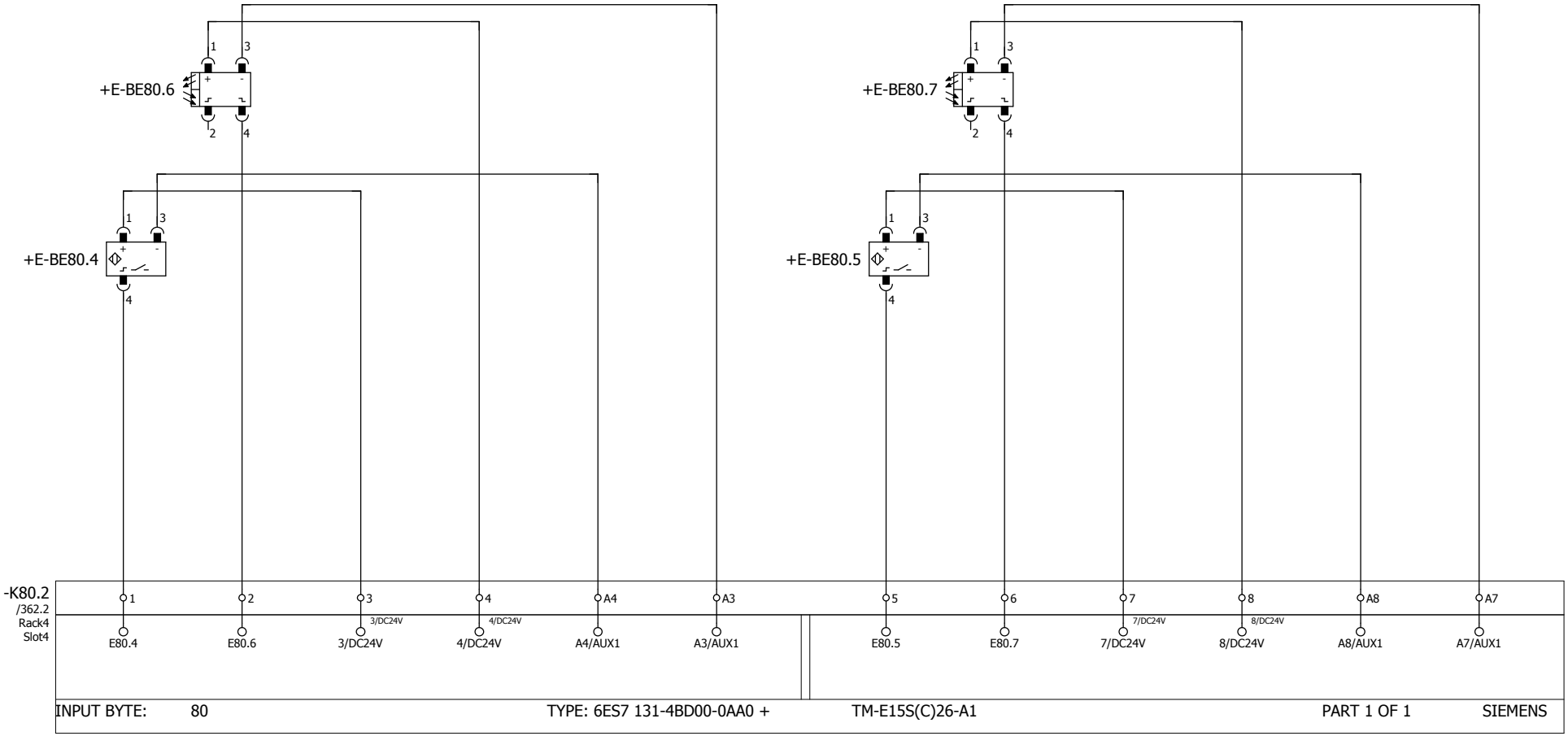

Initiator
Erkennung Teile
Rollenbahn 2

sensor
identification parts
roll conveyor 2

Lichttaster
Erkennung Teile
Reserve

light sensor
identification
parts reserve

Initiator
Erkennung Teile
Rollenbahn 1 Einlauf

sensor
identification parts
roll conveyor 1 inlet

Lichttaster
Erkennung Teile
Reserve

light sensor
identification
parts reserve

Duferco Clabecq

Management codes				Document identification				
5.3.0.0	CE	000	DW	QTPC	L04	ROSL	D	0049
System	Phase	Area	Typology	Project	Lot	Company	D/S	Number

Rev.	Date	Description	Prepared	Checked	Approved			
						Date	30.01.2012	
						Dus		
							Duferco (SBM 2) Schaltschrank	
							in place of	Replaced by

RÖSLER finding a better way ...

Control EB
80

= ES
+ S

01-130070 00

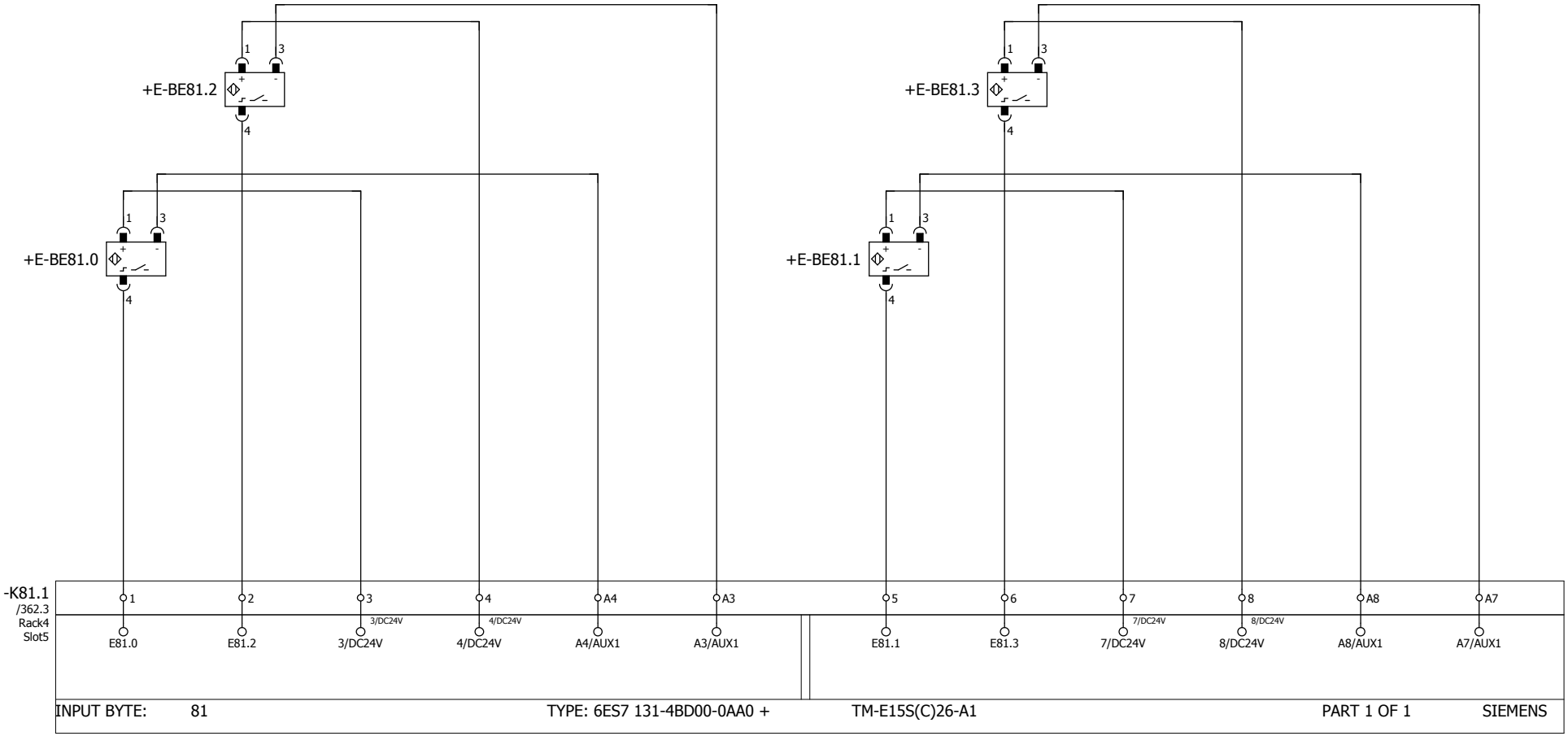

Initiator 1
Erkennung Teile
Segment 2

sensor 1
identification parts
segment 2

Initiator 1
Erkennung Teile
Segment 3

sensor 1
identification parts
segment 3

Initiator 2
Erkennung Teile
Segment 2

sensor 2
identification parts
segment 2

Initiator 2
Erkennung Teile
Segment 3

sensor 2
identification parts
segment 3

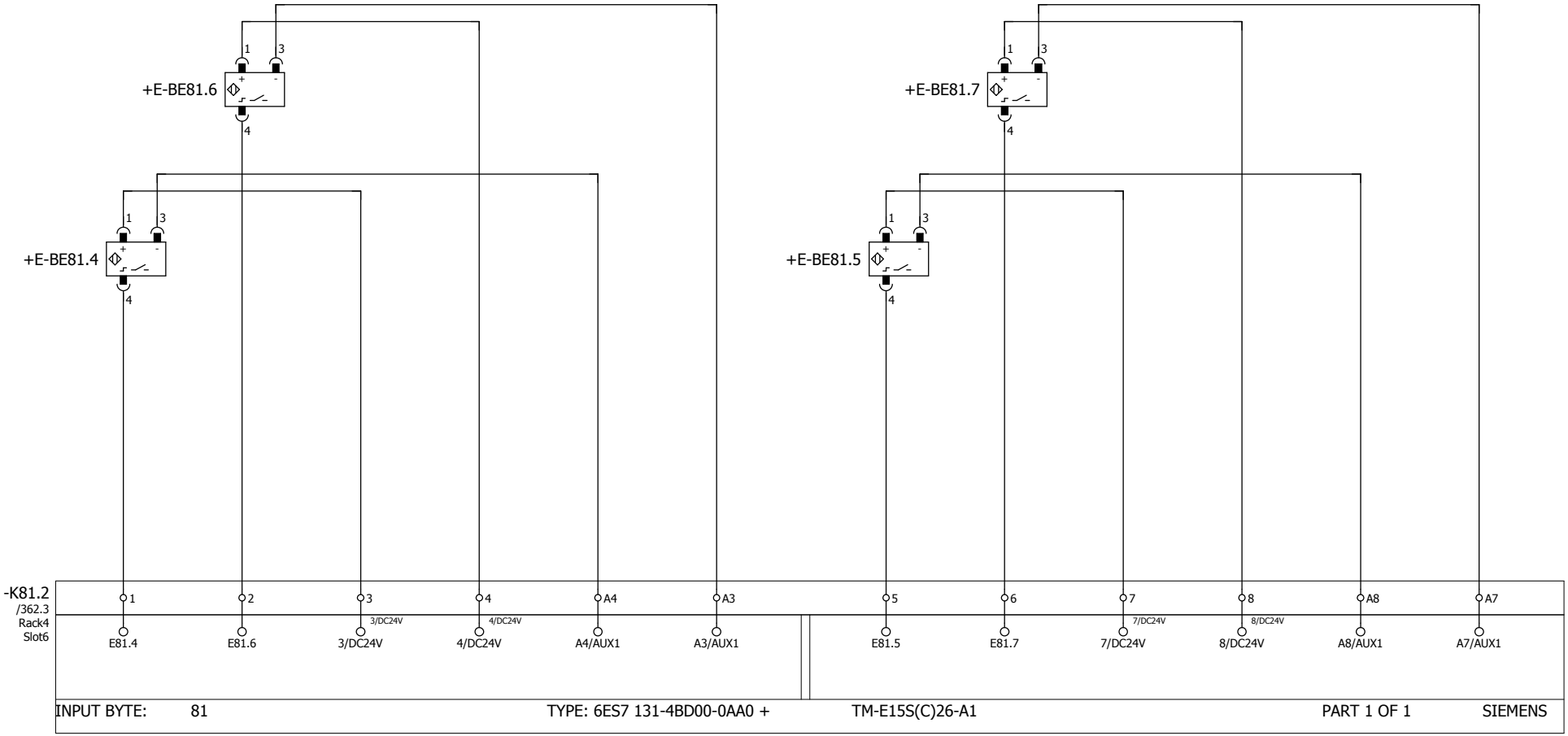

Initiator 1
Erkennung Teile
Segment 4

sensor 1
identification parts
segment 4

Initiator 1
Erkennung Teile
Segment 5

sensor 1
identification parts
segment 5

Initiator 2
Erkennung Teile
Segment 4

sensor 2
identification parts
segment 4

Initiator 2
Erkennung Teile
Segment 5

sensor 2
identification parts
segment 5

Rollenbahn TPC3 XL14
roll conveyor TPC3 XL14

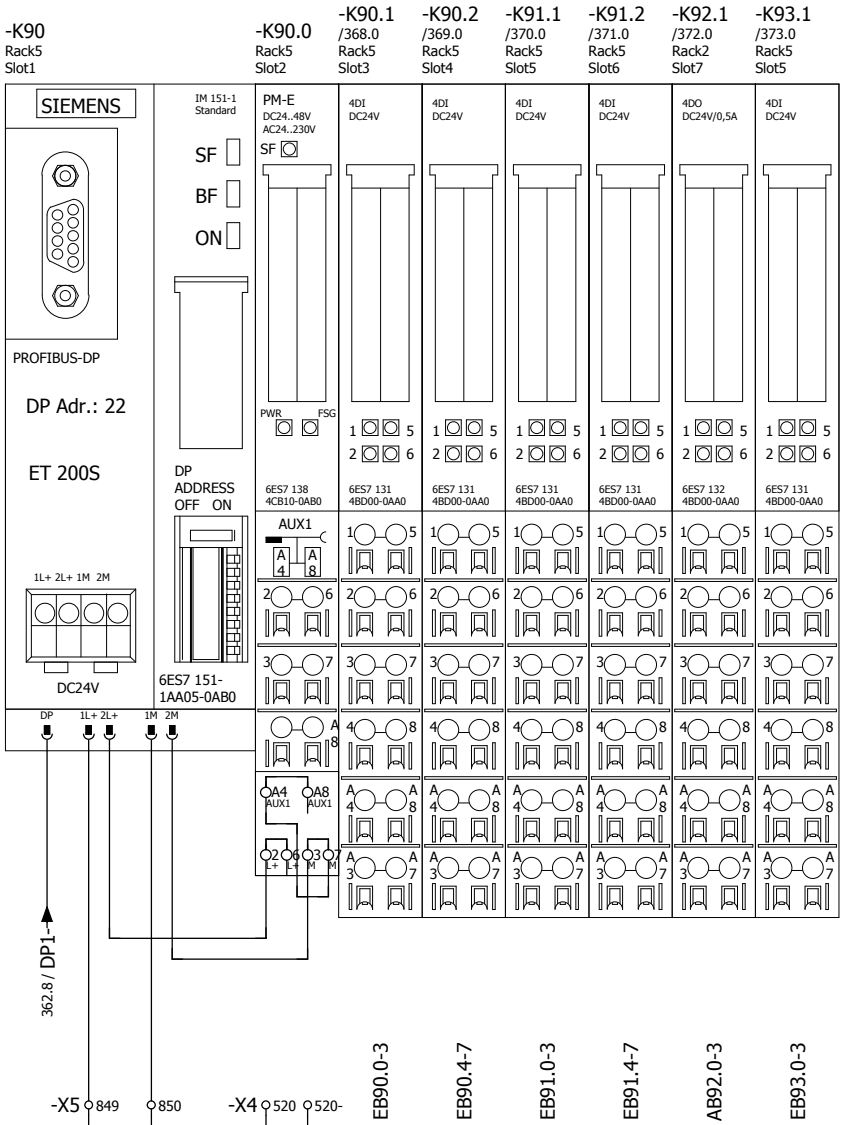

366

Duferco Clabecq

Management codes				Document identification				
5.3.0.0	CE	000	DW	QTPC	L04	ROSL	D	0049
System	Phase	Area	Typology	Project	Lot	Company	D/S	Number

368

Rev.	Date	Description	Prepared	Checked	Approved		
						Date	30.01.2012
						Dus	

Duferco (SBM 2) Schaltschrank

in place of | Replaced by

RÖSLER finding a better way ...

Control erection PLC
ET 200S roll conveyor TPC3

= ES
+ S

01-130070 00

Page 367
from 565

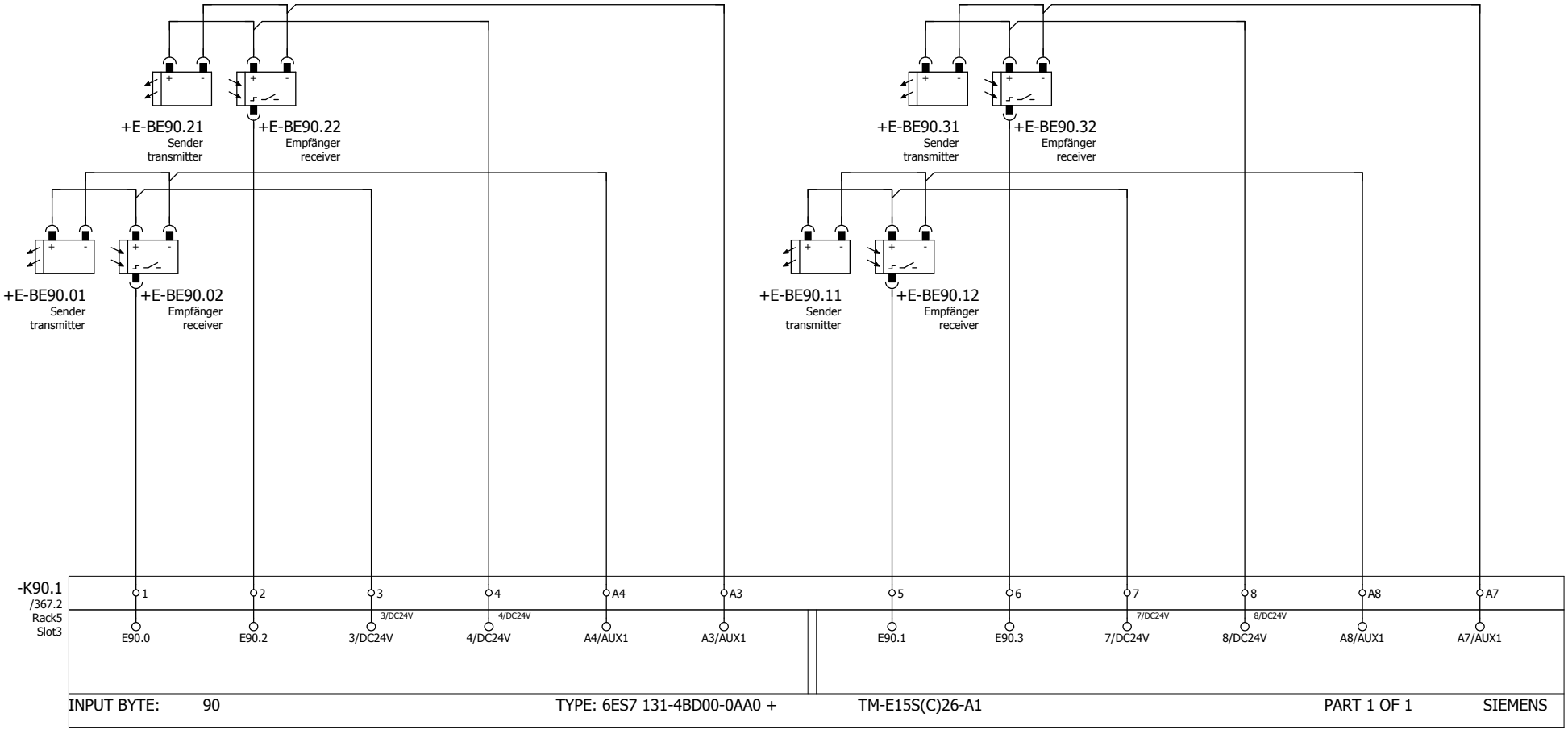

Lichtschranke
nach Farbtrockner

Light barrier
to paint drier

Lichtschranke
Rollenbahn TPC3
Ende

Light barrier
roll conveyor TPC3
end

Lichtschranke
Rollenbahn TPC3
Anfang

Light barrier
roll conveyor TPC3
start

Lichtschranke
Erkennung Teile
Ende Auslauf 2

Light barrier
identification
parts end outlet 2

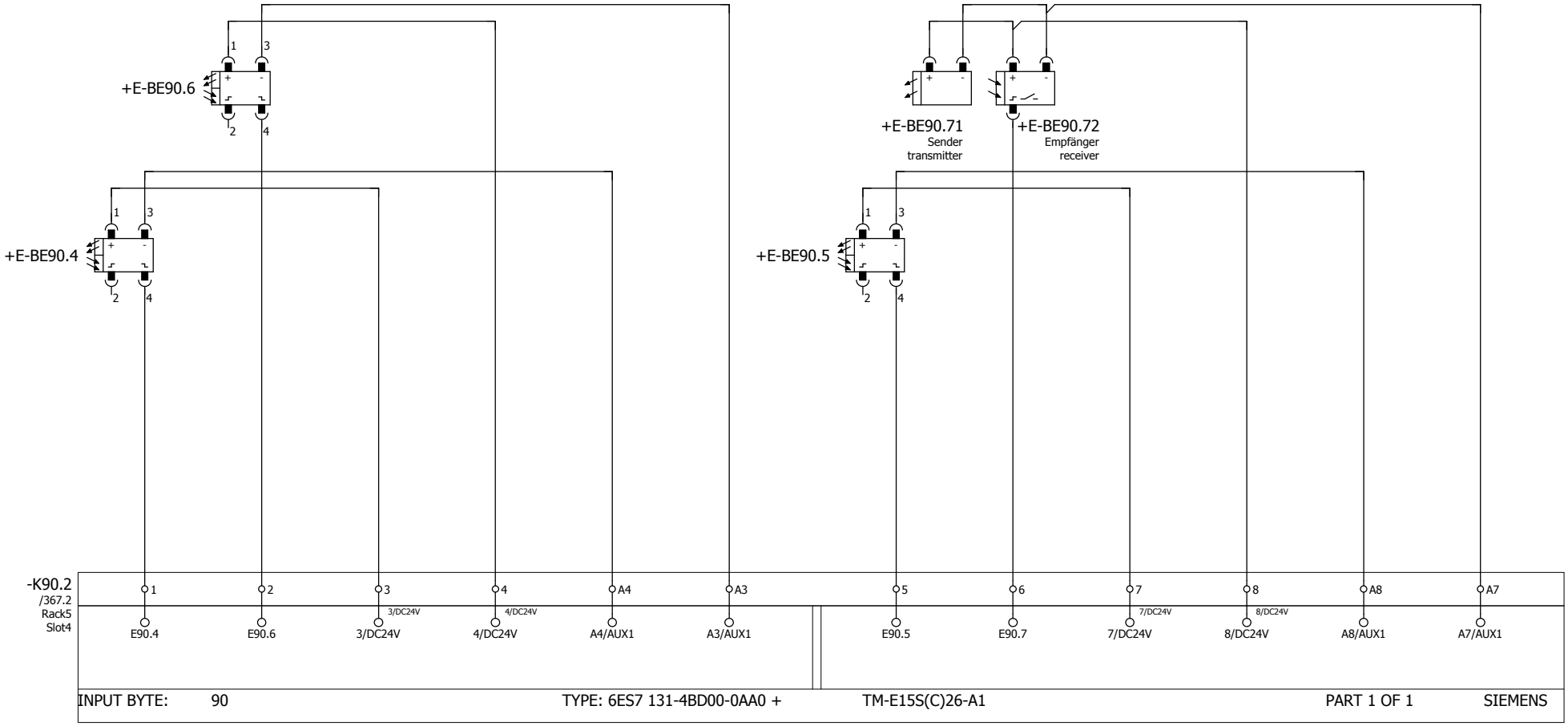

Lichttaster
Erkennung Teile 1
Rollenbahn TPC3

light sensor
identification
parts 1 roll conveyor TPC3

Lichttaster
Erkennung Teile 3
Rollenbahn TPC3

light sensor
identification
parts 3 roll conveyor TPC3

Lichttaster
Erkennung Teile 2
Rollenbahn TPC3

light sensor
identification
parts 2 roll conveyor TPC3

Lichtschranke
Erkennung Teile
Strahlen
Anfang Auslauf

Light barrier
identification
parts
blasting start outlet

Duferco Clabecq

Management codes				Document identification				
5.3.0.0	CE	000	DW	QTPC	L04	ROSL	D	0049
System	Phase	Area	Typology	Project	Lot	Company	D/S	Number

Rev.	Date	Description	Prepared	Checked	Approved	Date 30.01.2012	Duferco (SBM 2) Schaltschrank	
						Dus	in place of	Replaced by

RÖSLER finding a better way ...

Steuerung
EB 90

= ES
+ S

01-130070 00

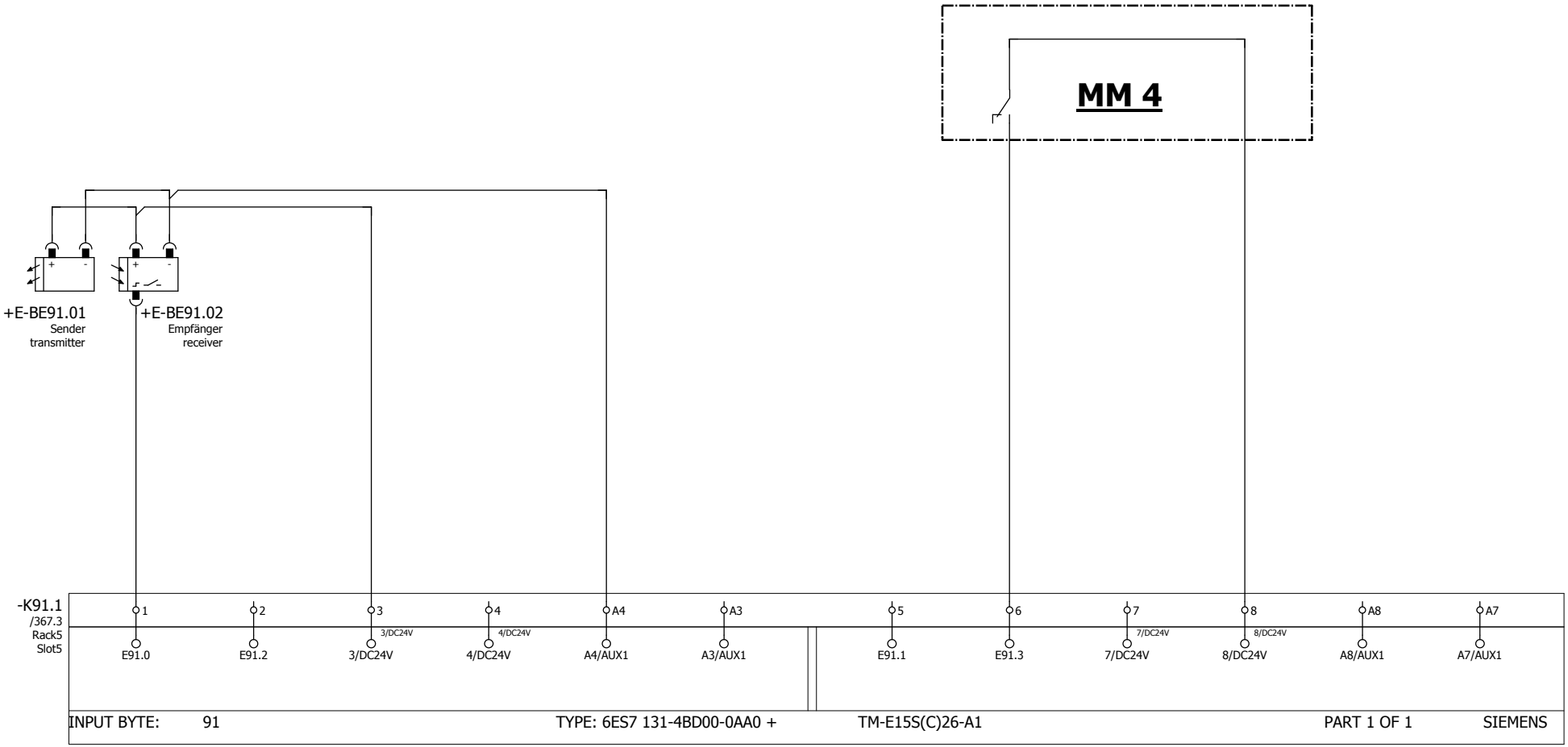

Lichtschranke Erkennung Teile Ende Rollenbahn 1 Auslauf Light barrier identification parts end roll conveyor 1 outlet	Reserve reserve	Reserve reserve	Verkettung MM 4 nach Rösler Markierung Aus interlinkage MM 4 to Rösler marker out

Duferco Clabecq

Management codes				Document identification				
5.3.0.0	CE	000	DW	QTPC	L04	ROSL	D	0049
System	Phase	Area	Typology	Project	Lot	Company	D/S	Number

Rev.	Date	Description	Prepared	Checked	Approved			
						Date	30.01.2012	
						Dus		
							Duferco (SBM 2) Schaltschrank	
							in place of	Replaced by

RÖSLER finding a better way ...

Control EB
91

= ES
+ S

01-130070 00

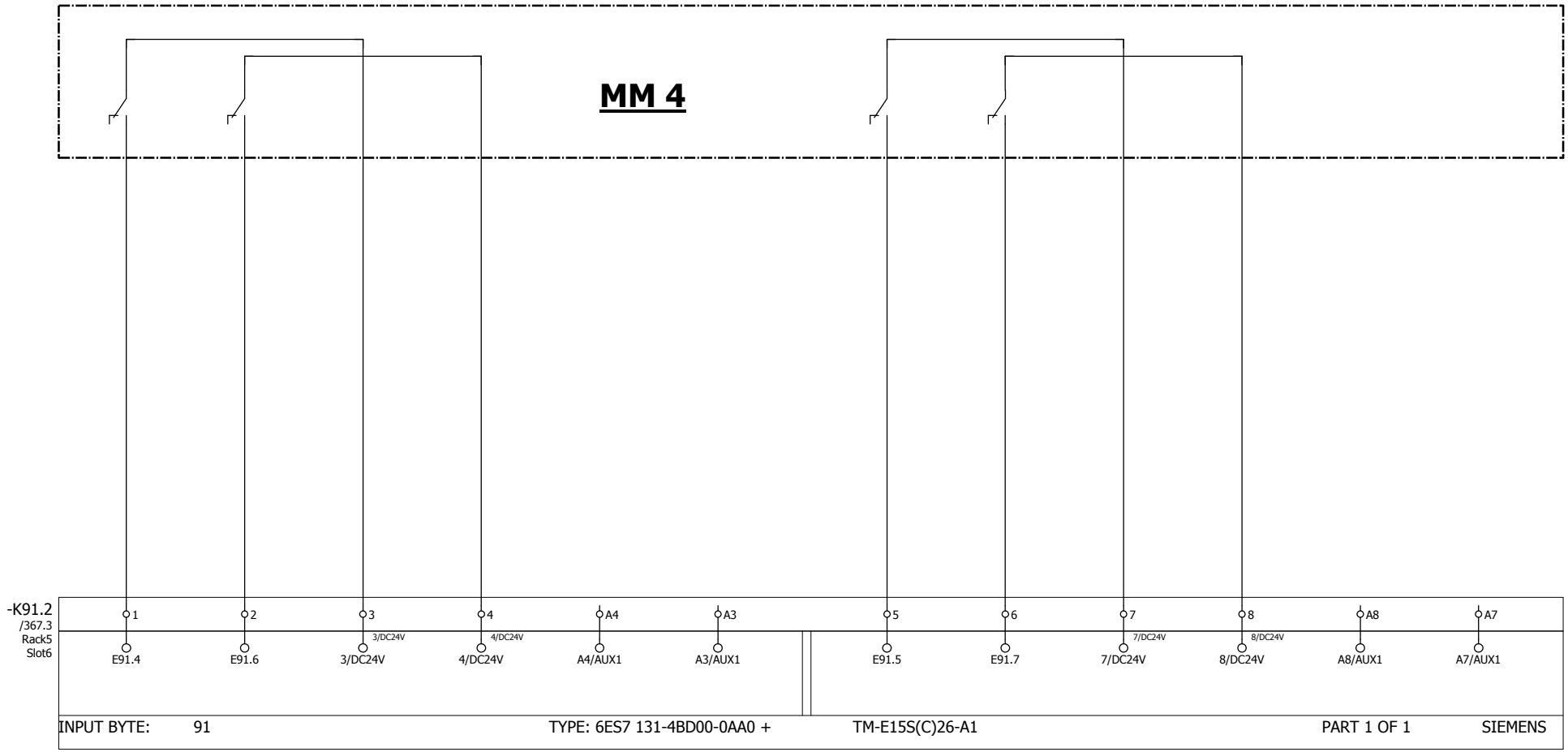

Verkettung MM 4 nach Rösler Störung Markierung	Verkettung MM 4 nach Rösler Betriebsbereit Markierung	Verkettung MM 4 nach Rösler Markierung Fertig	Verkettung MM 4 nach Rösler Markierung Stop Reinigen
interlinkage MM 4 to Rösler fault marker	interlinkage MM 4 to Rösler ready for operation marker	interlinkage MM 4 to Rösler marker ready	interlinkage MM 4 to Rösler marker stop cleaning

Duferco Clabecq

Management codes				Document identification				
5.3.0.0	CE	000	DW	QTPC	L04	ROSL	D	0049
System	Phase	Area	Typology	Project	Lot	Company	D/S	Number

Rev.	Date	Description	Prepared	Checked	Approved			
						Date	30.01.2012	
						Dus		
							Duferco (SBM 2) Schaltschrank	
							in place of	Replaced by

RÖSLER finding a better way ...

Control EB
91

= ES
+ S

01-130070 00

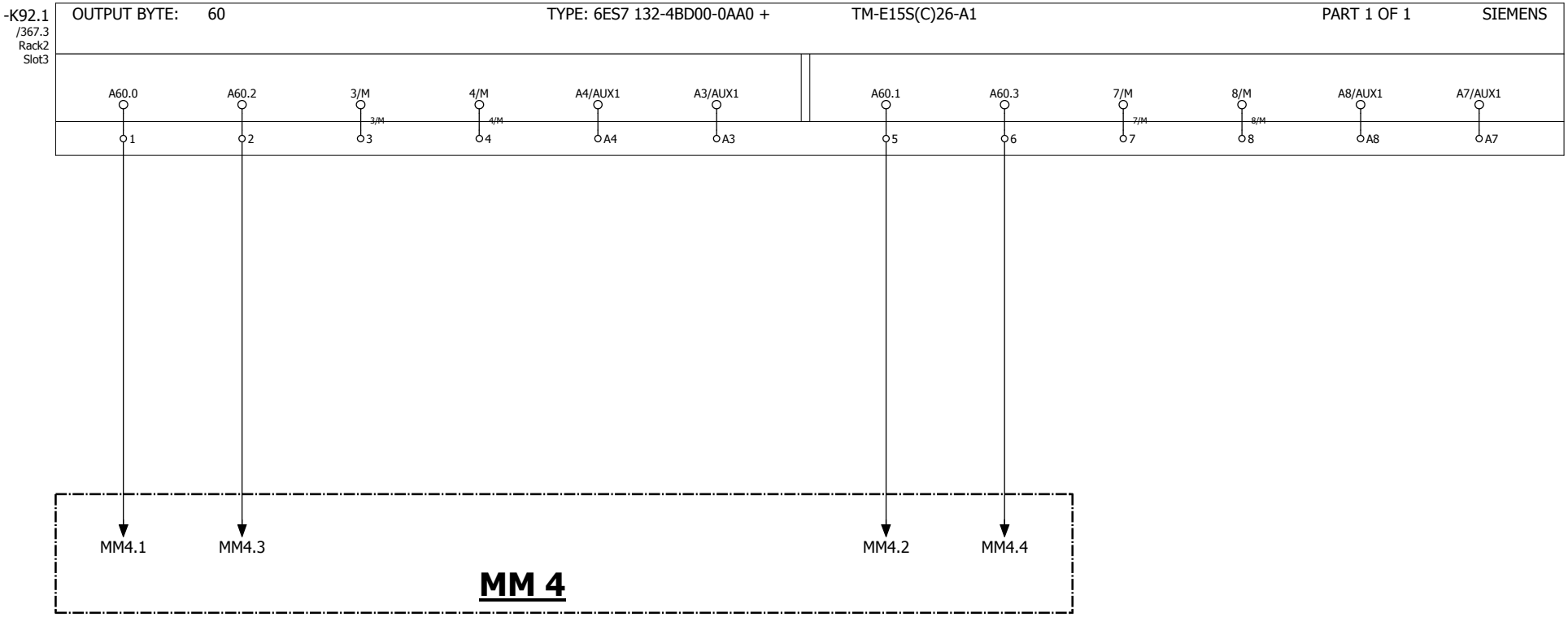

Verkettung Rösler nach MM 4 Markierung Start	Verkettung Rösler nach MM 4 Rollenbahn Stop
interlinkage Rösler to MM 4 marker start	interlinkage Rösler to MM 4 roll conveyor stop

Verkettung Rösler nach MM 4 Reserve	Verkettung Rösler nach MM 4 Reserve
interlinkage Rösler to MM 4 reserve	interlinkage Rösler to MM 4 reserve

Duferco Clabecq

Management codes				Document identification				
5.3.0.0	CE	000	DW	QTPC	L04	ROSL	D	0049
System	Phase	Area	Typology	Project	Lot	Company	D/S	Number

Rev.	Date	Description	Prepared	Checked	Approved	Date 30.01.2012 Dus	Duferco (SBM 2) Schaltschrank	RÖSLER finding a better way ...	Control AB 92	= ES + S	01-130070 00	Page 372 from 565
							in place of	Replaced by				

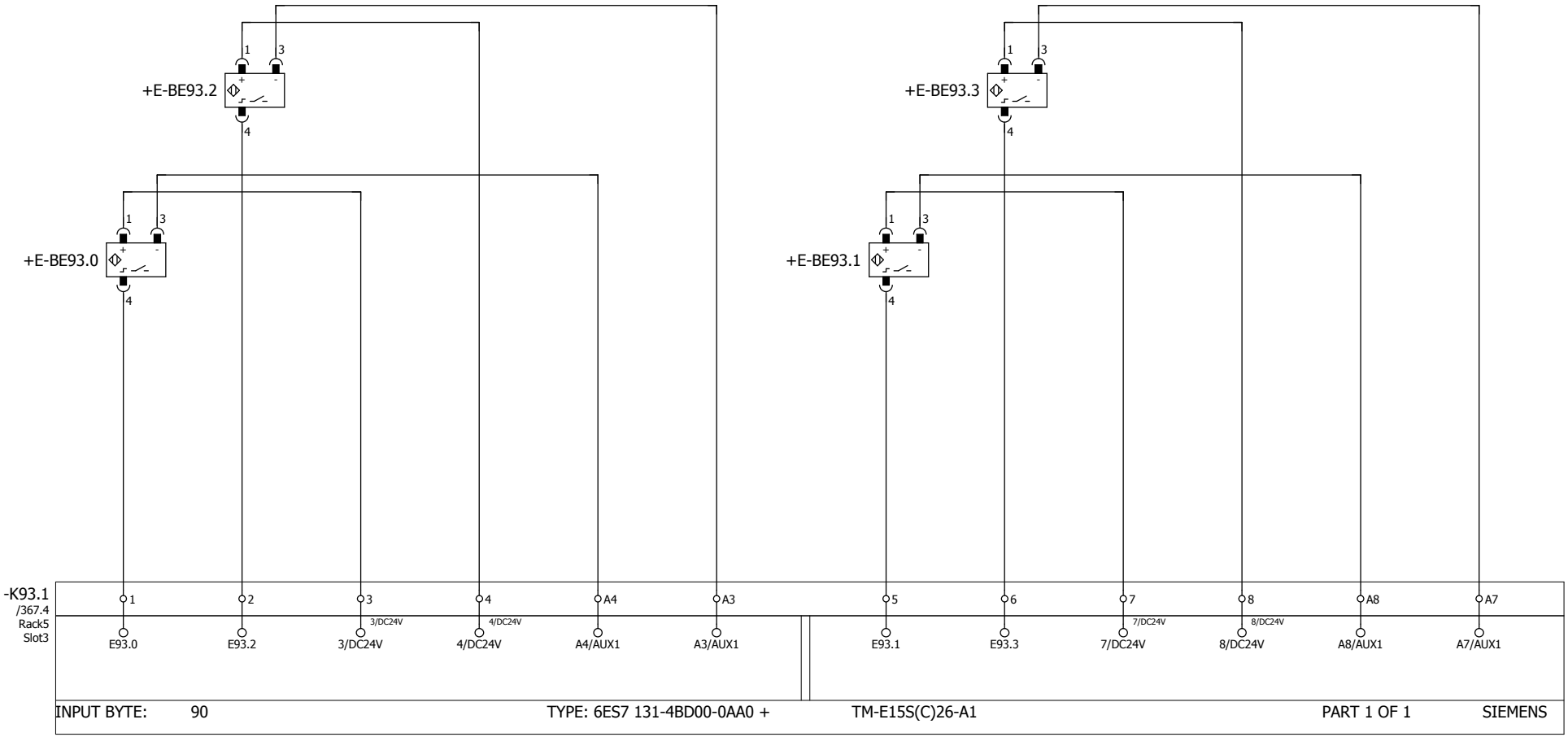

Initiator 1
Teileerkennung
nach Farbtrockner

sensor 1 part
reconnaissance
to paint drier

Initiator
Teileerkennung
nach Farbtrockner

sensor part
reconnaissance
to paint drier

Initiator 2
Teileerkennung
nach Farbtrockner

sensor 2 part
reconnaissance
to paint drier

Initiator
Erkennung Teile
Ende
Rollenbahn 1 Auslauf

sensor
identification parts
end
roll conveyor 1 outlet

Duferco Clabecq

Management codes				Document identification				
5.3.0.0	CE	000	DW	QTPC	L04	ROSL	D	0049
System	Phase	Area	Typology	Project	Lot	Company	D/S	Number

=AP+GP0/1

372

Rev.	Date	Description	Prepared	Checked	Approved			
						Date	30.01.2012	
						Dus		

Duferco (SBM 2) Schaltschrank

in place of | Replaced by

RÖSLER finding a better way ...

Control EB
93

= ES
+ S

01-130070 00

Page 373
from 565

-GP0

T13
TN13

T14
TN14

T15
TN15

T16
TN16

Duferco Clabecq

Management codes				Document identification				
5.3.0.0	CE	000	DW	QTPC	L04	ROSL	D	0049
System	Phase	Area	Typology	Project	Lot	Company	D/S	Number

=ES+S/373

+GP1/11

						Date	30.01.2012		
						Dus			
Rev.	Date	Description	Prepared	Checked	Approved			in place of	Replaced by

Duferco (SBM 2) Schaltschrank

RÖSLER finding a better way ...

baseplate

= AP
+ GP0

01-130070 00

Page 1
from 565

-GP1

+GP0/1

Duferco Clabecq

Management codes				Document identification				
5.3.0.0	CE	000	DW	QTPC	L04	ROSL	D	0049
System	Phase	Area	Typology	Project	Lot	Company	D/S	Number

22

						Date	30.01.2012	
						Dus		
Rev.	Date	Description	Prepared	Checked	Approved		in place of	Replaced by

Duferco (SBM 2) Schaltschrank

RÖSLER finding a better way ...

baseplate left

= AP
+ GP1

01-130070 00

Page 1
from 565

-GP2

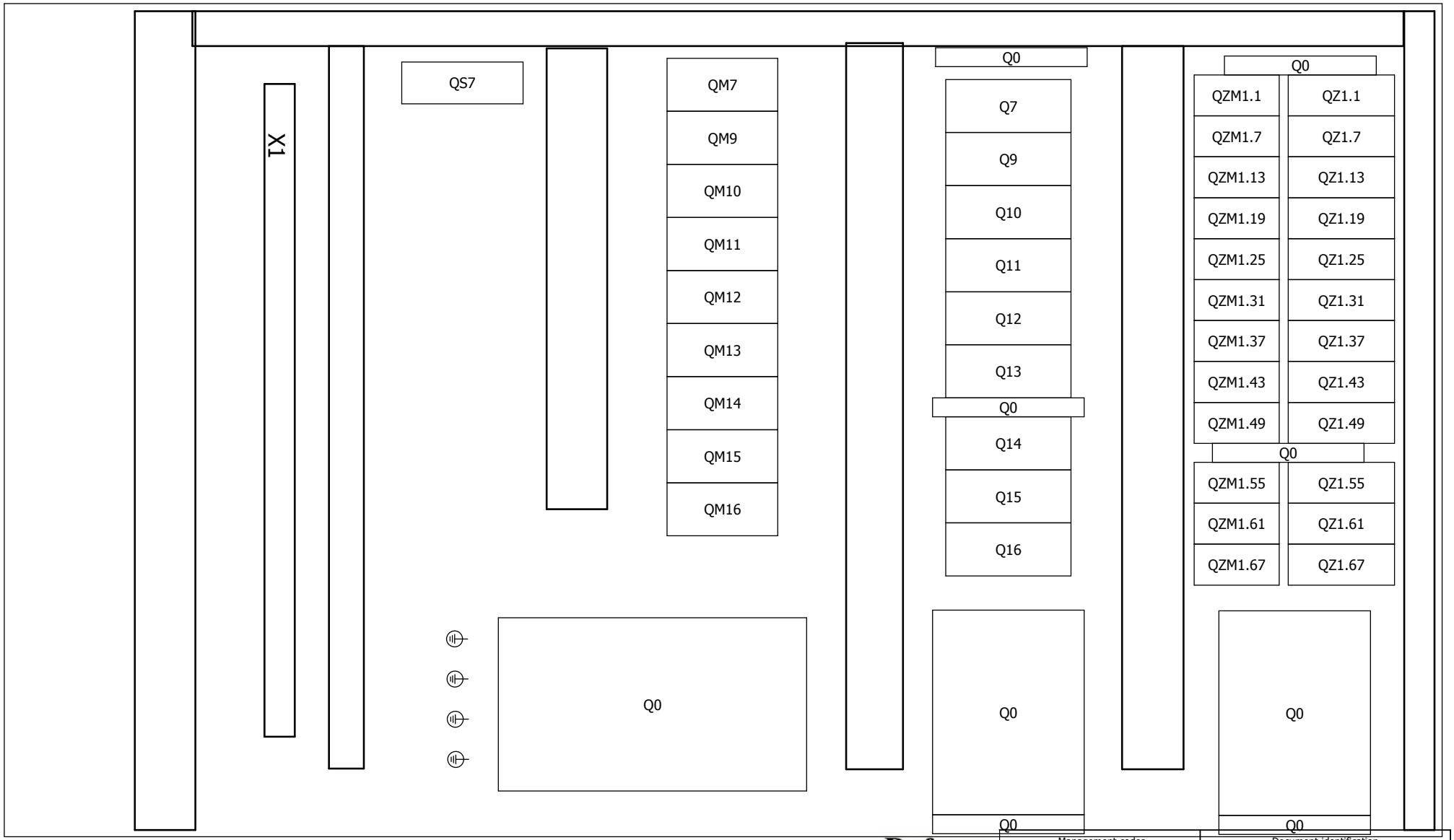

Duferco Clabecq

Management codes				Document identification				
5.3.0.0	CE	000	DW	QTPC	L04	ROSL	D	0049
System	Phase	Area	Typology	Project	Lot	Company	D/S	Number

1 33

						Date	30.01.2012	Duferco (SBM 2) Schaltschrank	
						Dus			
Rev.	Date	Description	Prepared	Checked	Approved			in place of	Replaced by

RÖSLER finding a better way ...

baseplate center left

= AP
+ GP1

01-130070 00

Page 2
from 565

-GP3

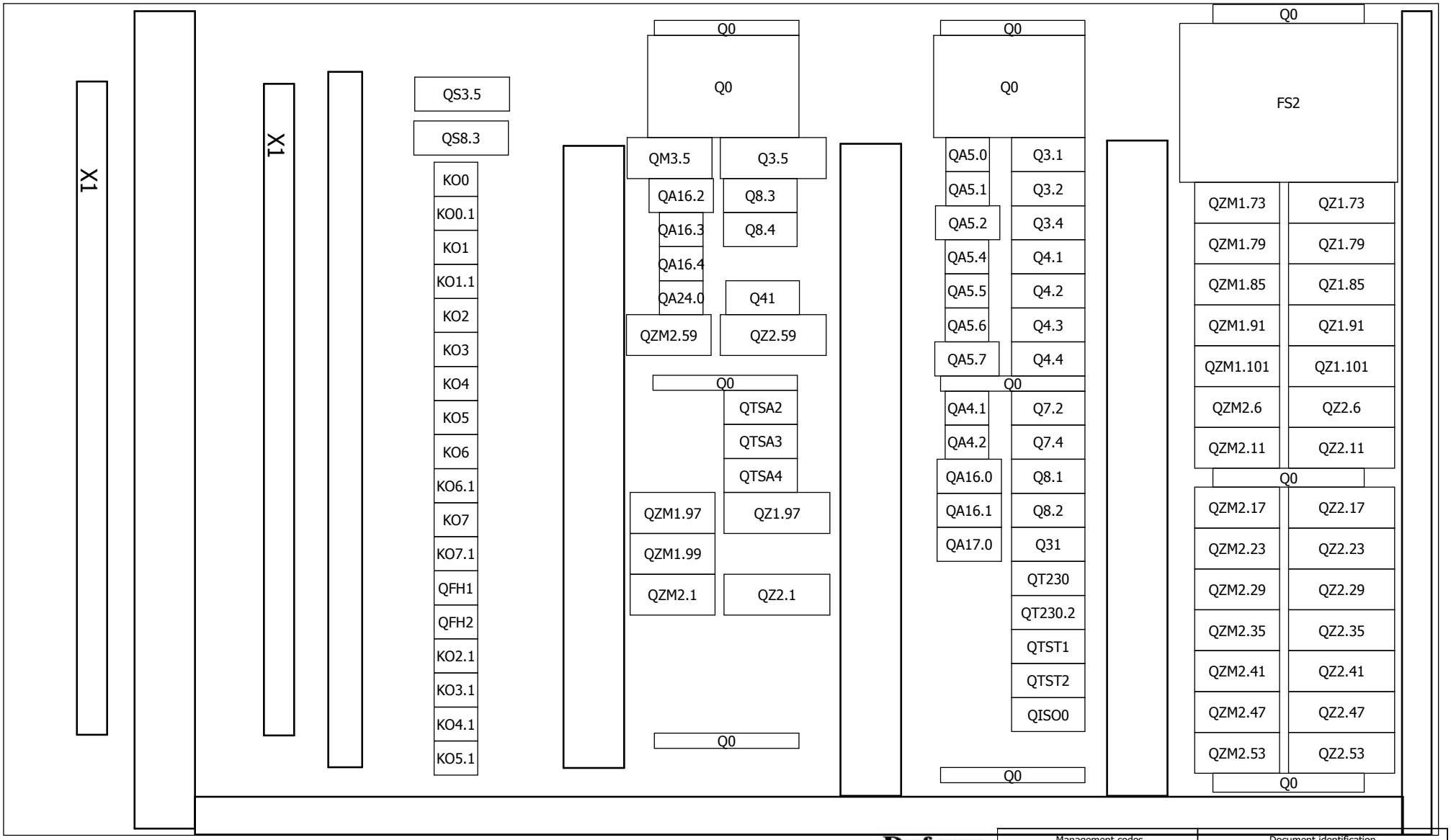

Duferco Clabecq

Management codes				Document identification				
5.3.0.0 CE	000	DW		QTPC	L04	ROSL	D	0049
System Phase	Area	Typology		Project	Lot	Company	D/S	Number

2 4

						Date 30.01.2012		
						Dus		
Rev.	Date	Description	Prepared	Checked	Approved		in place of	Replaced by

Duferco (SBM 2) Schaltschrank

RÖSLER finding a better way ...

baseplate center right

= AP
+ GP1

01-130070 00

Page 3
from 565

-GP4

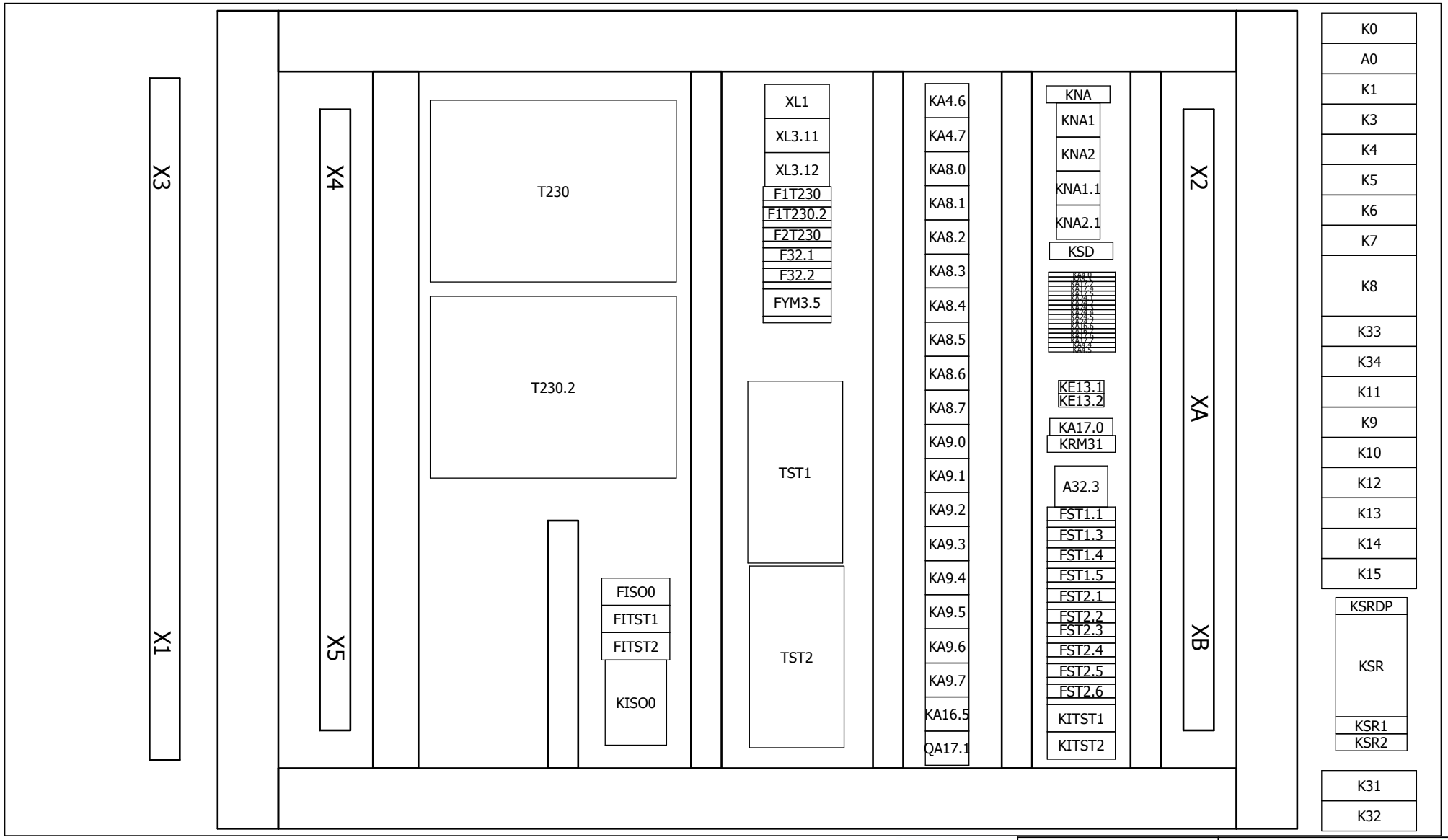

Duferco Clabecq

Management codes				Document identification				
5.3.0.0	CE	000	DW	QTPC	L04	ROSL	D	0049
System	Phase	Area	Typology	Project	Lot	Company	D/S	Number

3 +GP2/11

						Date	30.01.2012		
						Dus			
Rev.	Date	Description	Prepared	Checked	Approved				

Duferco (SBM 2) Schaltschrank

in place of | Replaced by

RÖSLER finding a better way ...

Grundplatte rechts

= AP
+ GP1

01-130070 00

Page 4
from 565

-GP1

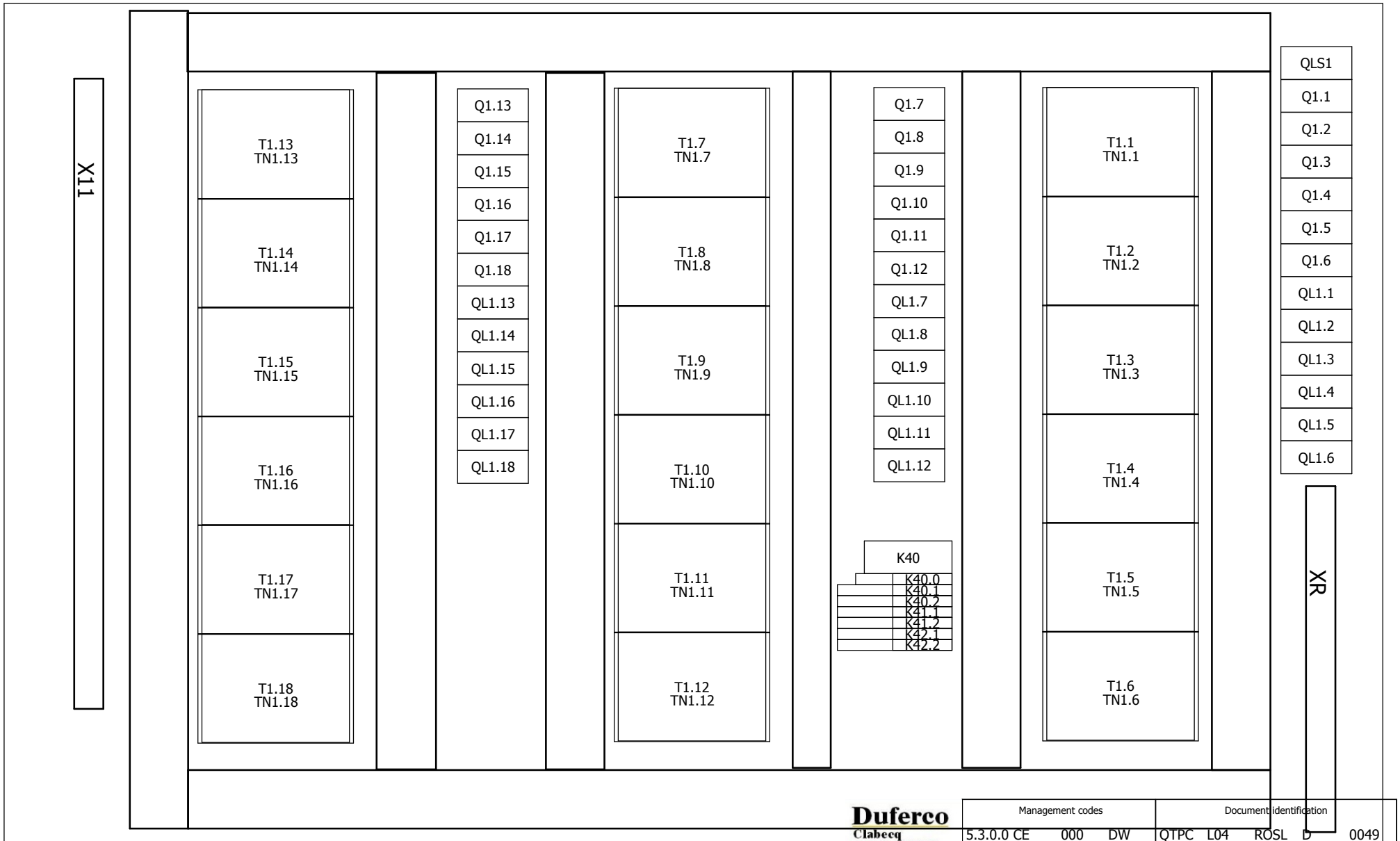

Duferco Clabecq

Management codes				Document identification				
5.3.0.0 CE	000	DW		QTPC	L04	ROSL	D	0049
System	Phase	Area	Typology	Project	Lot	Company	D/S	Number

+GP1/4

22

Rev.	Date	Description	Prepared	Checked	Approved			
						Date	30.01.2012	
						Dus		

Duferco (SBM 2) Schaltschrank

in place of | Replaced by

RÖSLER finding a better way ...

baseplate left

= AP
+ GP2

01-130070 00

Page 1
from 565

-GP2

X11

T1.31 TN1.31
T1.32 TN1.32
T1.33 TN1.33
T1.34 TN1.34
T1.35 TN1.35
T1.36 TN1.36

Q1.31
Q1.32
Q1.33
Q1.34
Q1.35
Q1.36
QL1.31
QL1.32
QL1.33
QL1.34
QL1.35
QL1.36

T1.25 TN1.25
T1.26 TN1.26
T1.27 TN1.27
T1.28 TN1.28
T1.29 TN1.29
T1.30 TN1.30

Q1.25
Q1.26
Q1.27
Q1.28
Q1.29
Q1.30
QL1.25
QL1.26
QL1.27
QL1.28
QL1.29
QL1.30
K21

T1.19 TN1.19
T1.20 TN1.20
T1.21 TN1.21
T1.22 TN1.22
T1.23 TN1.23
T1.24 TN1.24

QLS19
Q1.19
Q1.20
Q1.21
Q1.22
Q1.23
Q1.24
QL1.19
QL1.20
QL1.21
QL1.22
QL1.23
QL1.24

XR

Duferco Clabecq

Management codes				Document identification				
5.3.0.0 CE	000	DW		QTPC	L04	ROSL	D	0049
System	Phase	Area	Typology	Project	Lot	Company	D/S	Number

1 3

						Date	30.01.2012	
						Dus		
Rev.	Date	Description	Prepared	Checked	Approved			

Duferco (SBM 2) Schaltschrank

in place of | Replaced by

RÖSLER finding a better way ...

baseplate center

= AP
+ GP2

01-130070 00

Page 2
from 565

-GP3

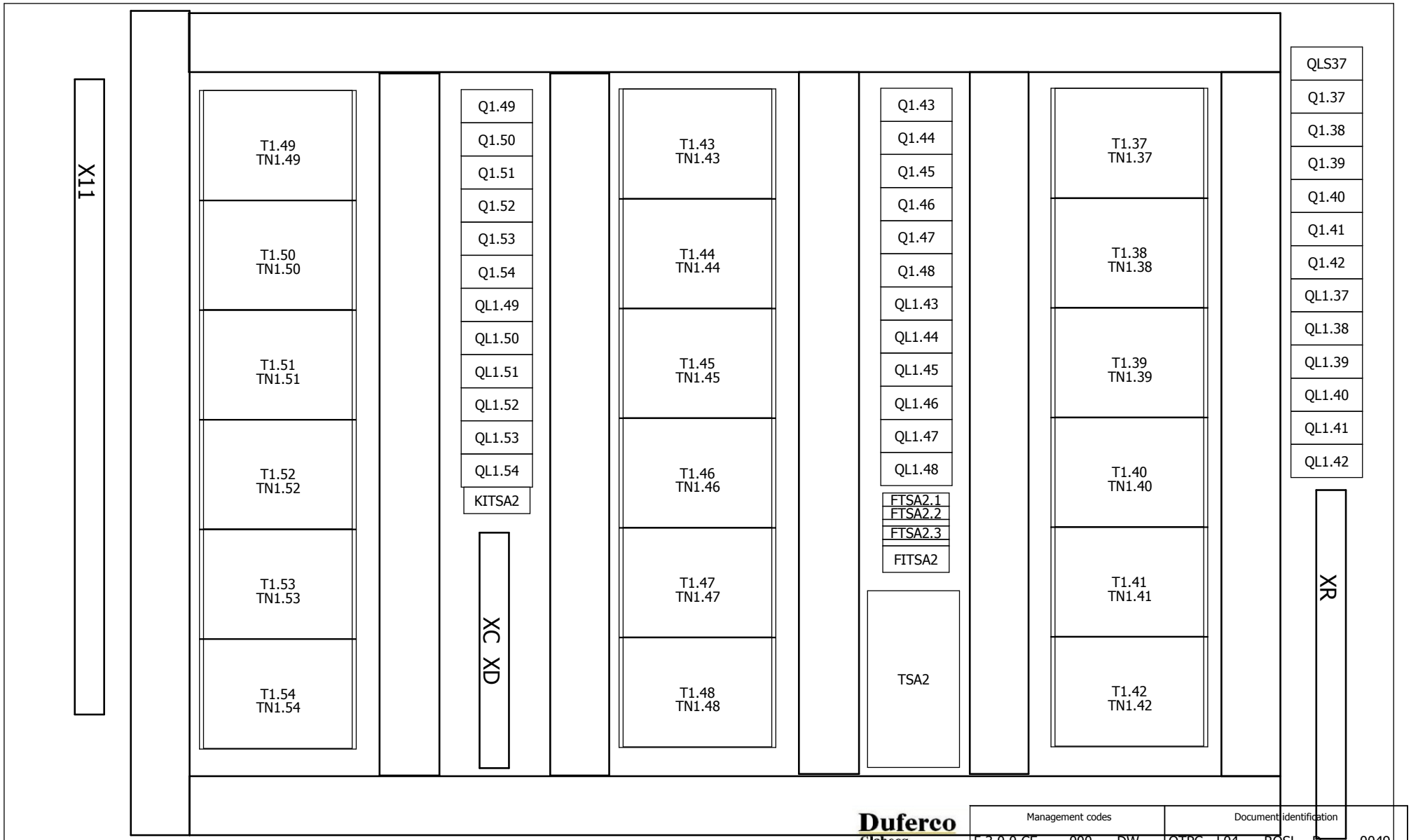

Duferco Clabecq

Management codes				Document identification				
5.3.0.0 CE	000	DW		QTPC	L04	ROSL	D	0049
System	Phase	Area	Typology	Project	Lot	Company	D/S	Number

2 +GP3/11

Rev.	Date	Description	Prepared	Checked	Approved			
						Date 30.01.2012		
						Dus		
						Duferco (SBM 2) Schaltschrank		
						in place of	Replaced by	

RÖSLER finding a better way ...

baseplate right

= AP
+ GP2

01-130070 00

Page 3
from 565

-GP1

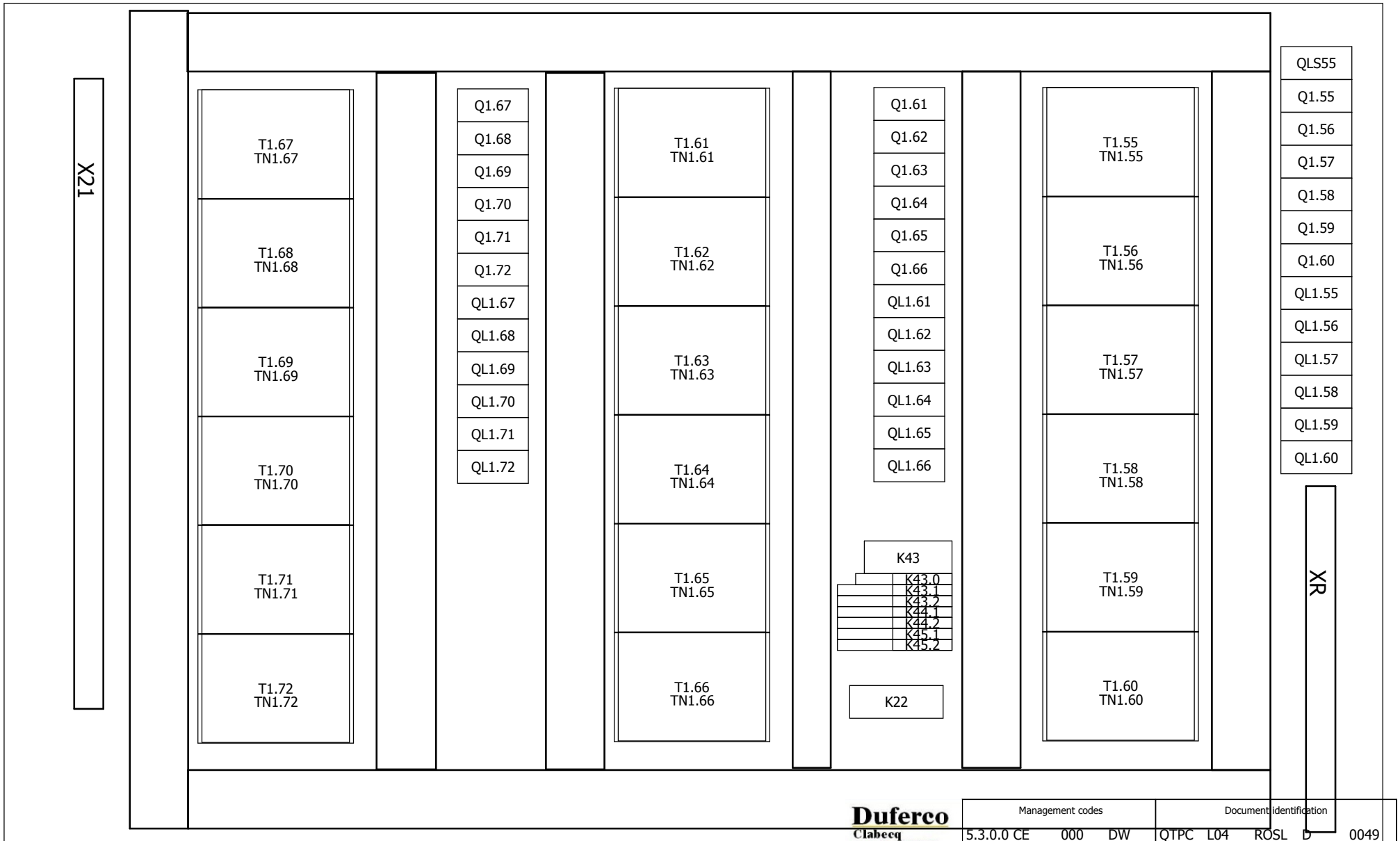

Duferco Clabecq

Management codes				Document identification				
5.3.0.0 CE	000	DW		QTPC	L04	ROSL	D	0049
System	Phase	Area	Typology	Project	Lot	Company	D/S	Number

+GP2/3

22

Rev.	Date	Description	Prepared	Checked	Approved			
						Date	30.01.2012	
						Dus		
						Duferco (SBM 2) Schaltschrank		
						in place of	Replaced by	

RÖSLER finding a better way ...

baseplate left

= AP
+ GP3

01-130070 00

Page 1
from 565

-GP2

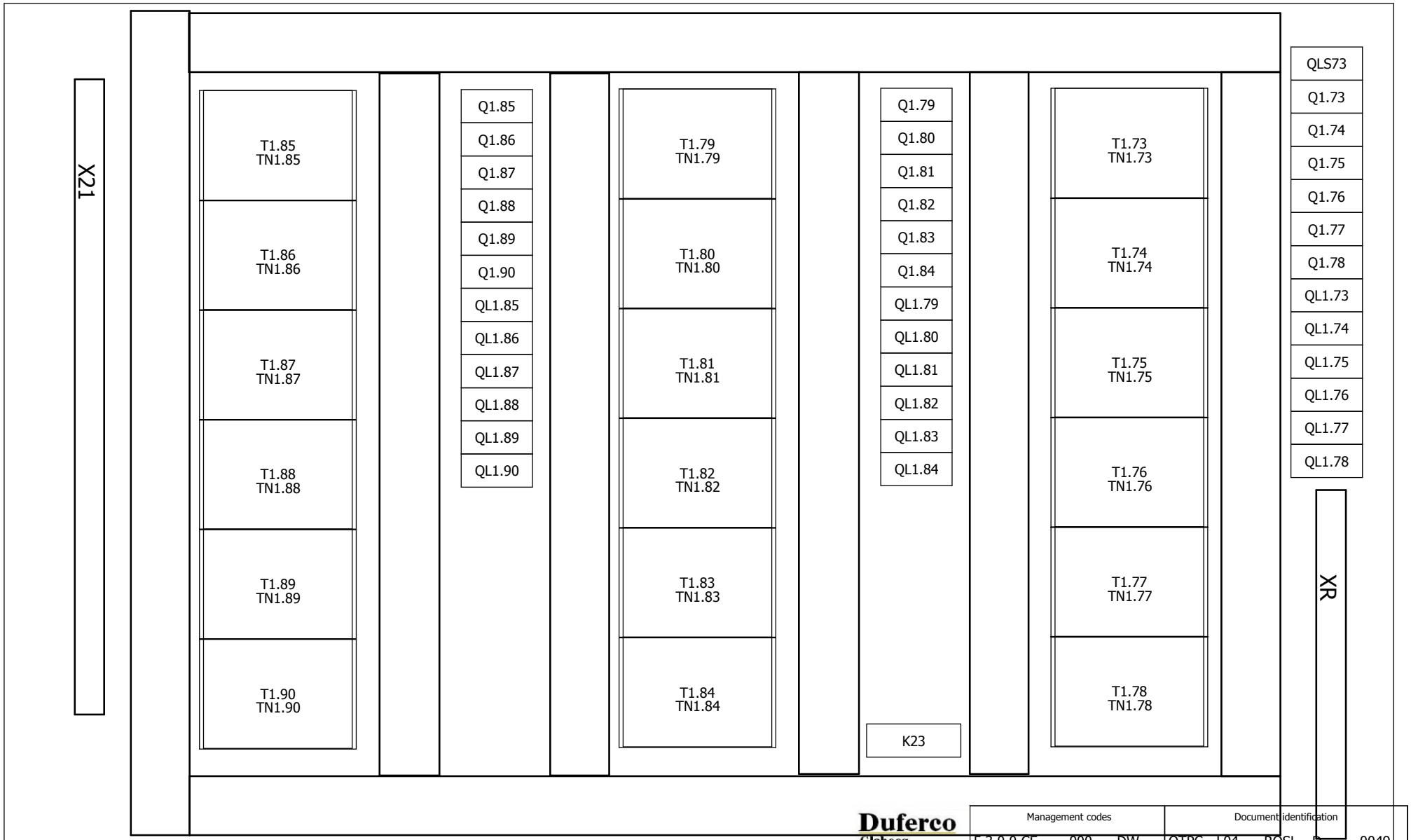

Duferco Clabecq

Management codes				Document identification				
5.3.0.0 CE	000	DW		QTPC	L04	ROSL	D	0049
System	Phase	Area	Typology	Project	Lot	Company	D/S	Number

1 3

Rev.	Date	Description	Prepared	Checked	Approved	Date 30.01.2012	Duferco (SBM 2) Schaltschrank	RÖSLER finding a better way ...	baseplate center	= AP	01-130070 00	Page 2
						Dus				+ GP3		from 565
							in place of	Replaced by				

-GP3

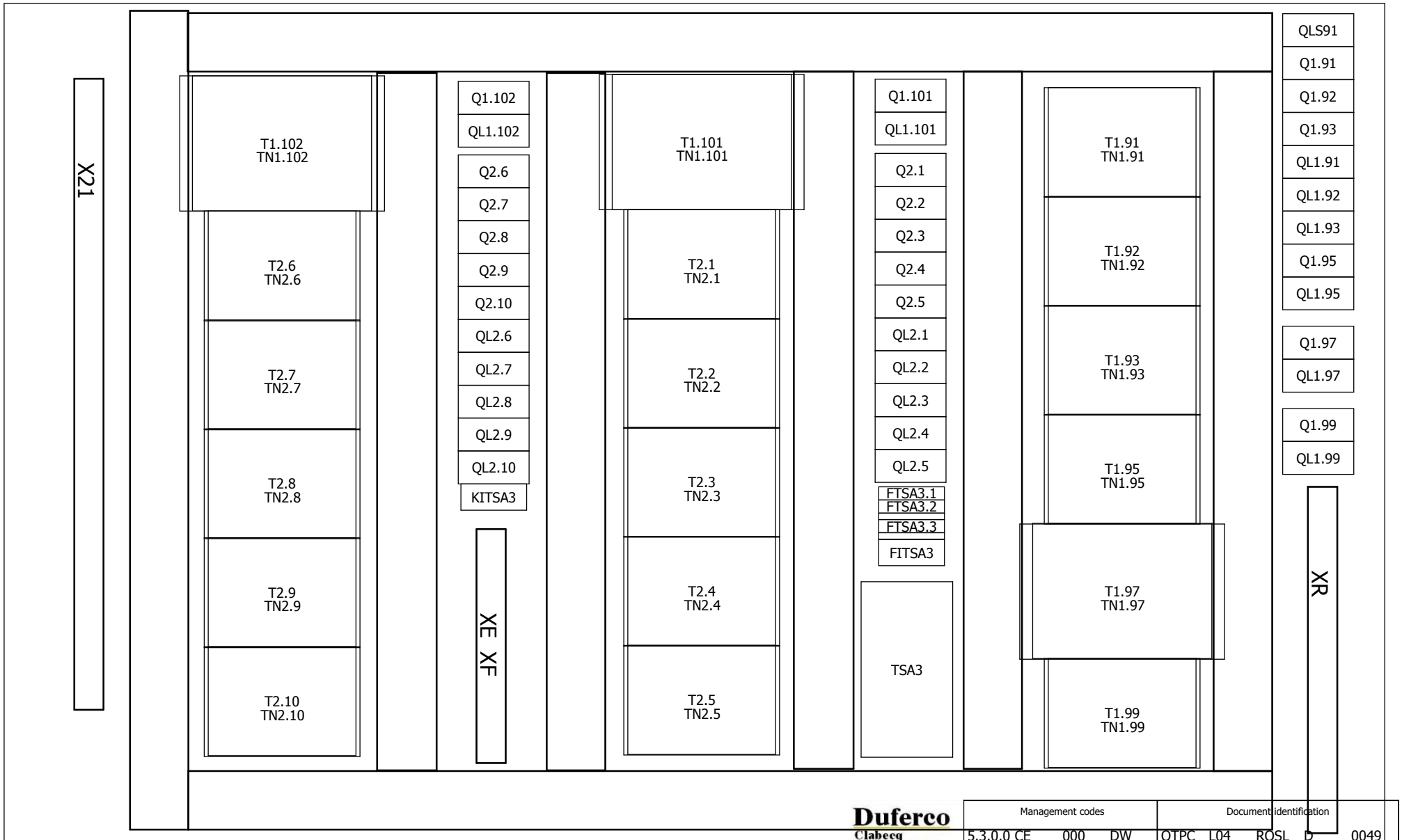

Duferco Clabecq

Management codes				Document identification				
5.3.0.0 CE	000	DW		QTPC	L04	ROSL	D	0049
System	Phase	Area	Typology	Project	Lot	Company	D/S	Number

2 +GP4/11

						Date	30.01.2012		
						Dus			
Rev.	Date	Description	Prepared	Checked	Approved				

Duferco (SBM 2) Schaltschrank

in place of | Replaced by

RÖSLER finding a better way ...

baseplate right

= AP
+ GP3

01-130070 00

Page 3
from 565

-GP1

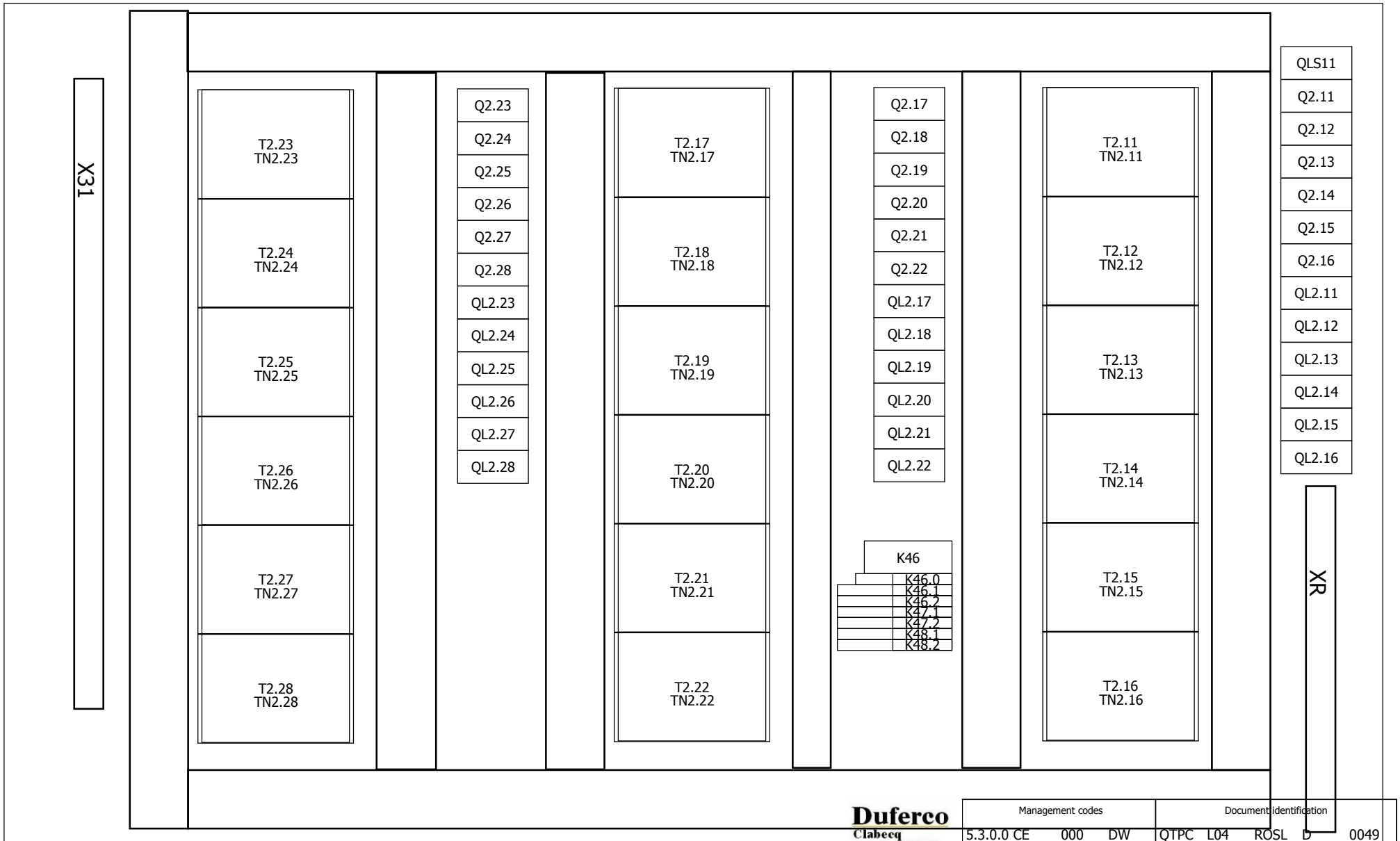

Duferco Clabecq

Management codes				Document identification				
5.3.0.0 CE	000	DW		QTPC	L04	ROSL	D	0049
System	Phase	Area	Typology	Project	Lot	Company	D/S	Number

+GP3/3

2

Rev.	Date	Description	Prepared	Checked	Approved			
						Date	30.01.2012	
						Dus		

Duferco (SBM 2) Schaltschrank

in place of | Replaced by

RÖSLER finding a better way ...

baseplate left

= AP
+ GP4

01-130070 00

Page 1
from 565

-GP2

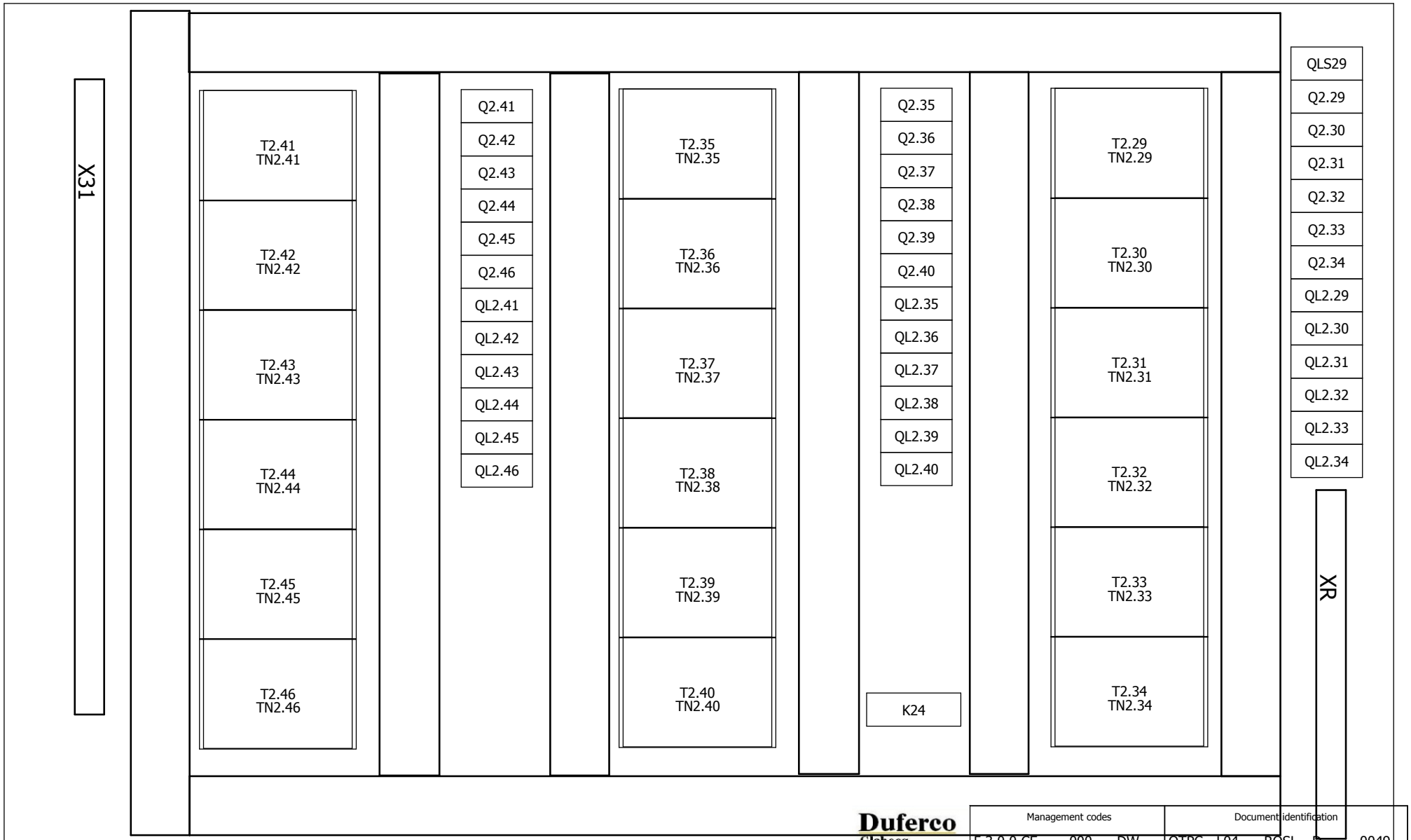

Duferco Clabecq

Management codes				Document identification				
5.3.0.0 CE	000	DW		QTPC	L04	ROSL	D	0049
System	Phase	Area	Typology	Project	Lot	Company	D/S	Number

1 3

Rev.	Date	Description	Prepared	Checked	Approved			
						Date	30.01.2012	
						Dus		

Duferco (SBM 2) Schaltschrank

in place of | Replaced by

RÖSLER finding a better way ...

baseplate center

= AP
+ GP4

01-130070 00

Page 2
from 565

-GP3

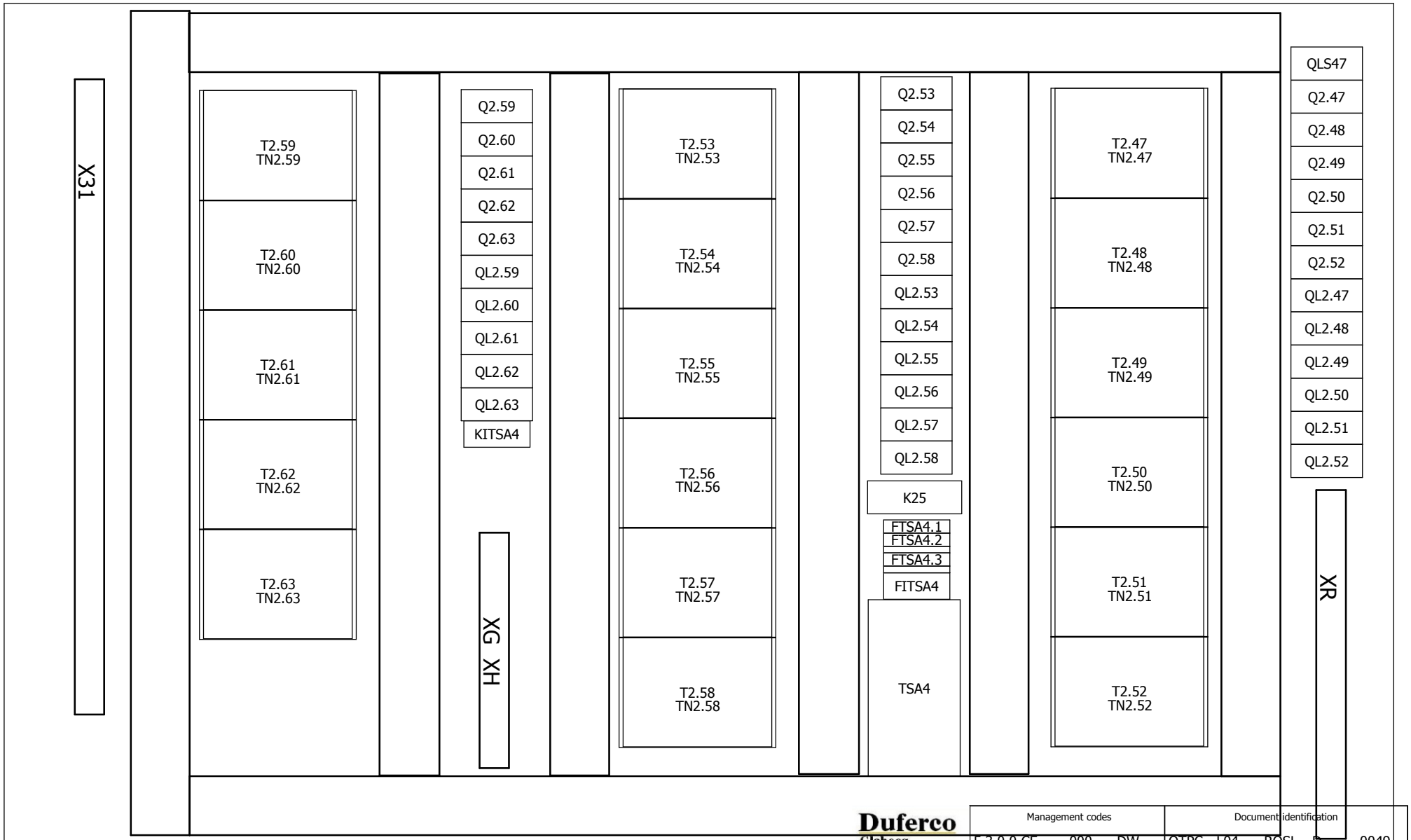

Duferco Clabecq

Management codes				Document identification				
5.3.0.0 CE	000	DW		QTPC	L04	ROSL	D	0049
System	Phase	Area	Typology	Project	Lot	Company	D/S	Number

2 +SM01/11

Rev.	Date	Description	Prepared	Checked	Approved			
						Date	30.01.2012	
						Dus		

Duferco (SBM 2) Schaltschrank

in place of | Replaced by

RÖSLER finding a better way ...

baseplate right

= AP
+ GP4

01-130070 00

Page 3
from 565

-Schrank 0

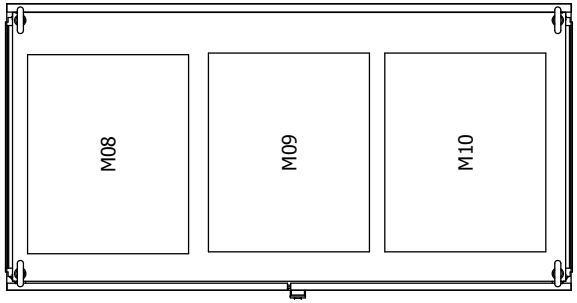

-Schrank 0

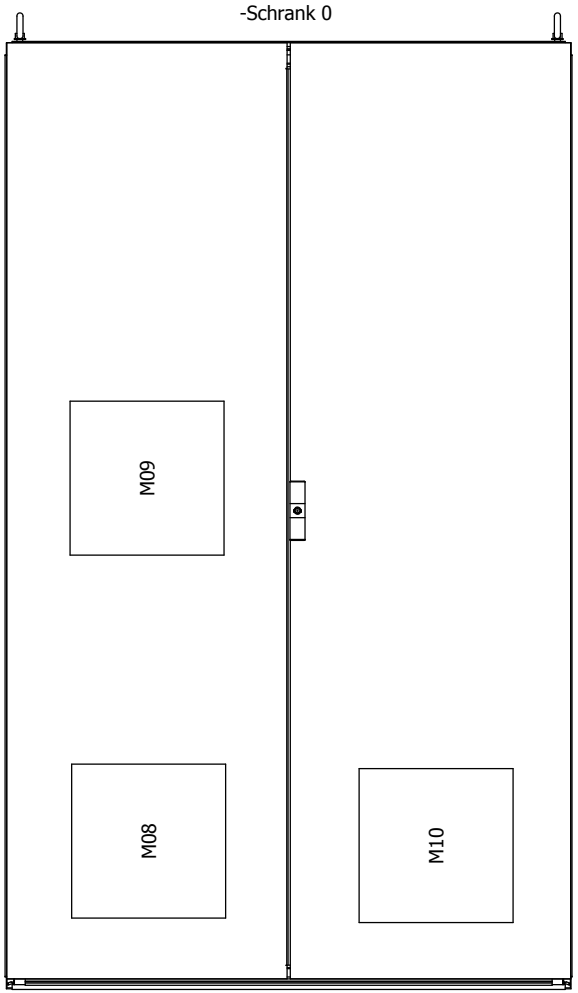

+GP4/3

Duferco Clabecq

Management codes				Document identification				
5.3.0.0	CE	000	DW	QTPC	L04	ROSL	D	0049
System	Phase	Area	Typology	Project	Lot	Company	D/S	Number

+SA1/1

						Date	30.01.2012	
						Dus		
Rev.	Date	Description	Prepared	Checked	Approved		in place of	Replaced by

Duferco (SBM 2) Schaltschrank

RÖSLER finding a better way ...

erection Enclosure

= AP
+ SA0

01-130070 00

Page 1
from 565

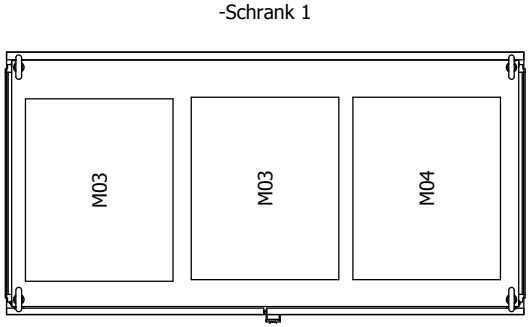

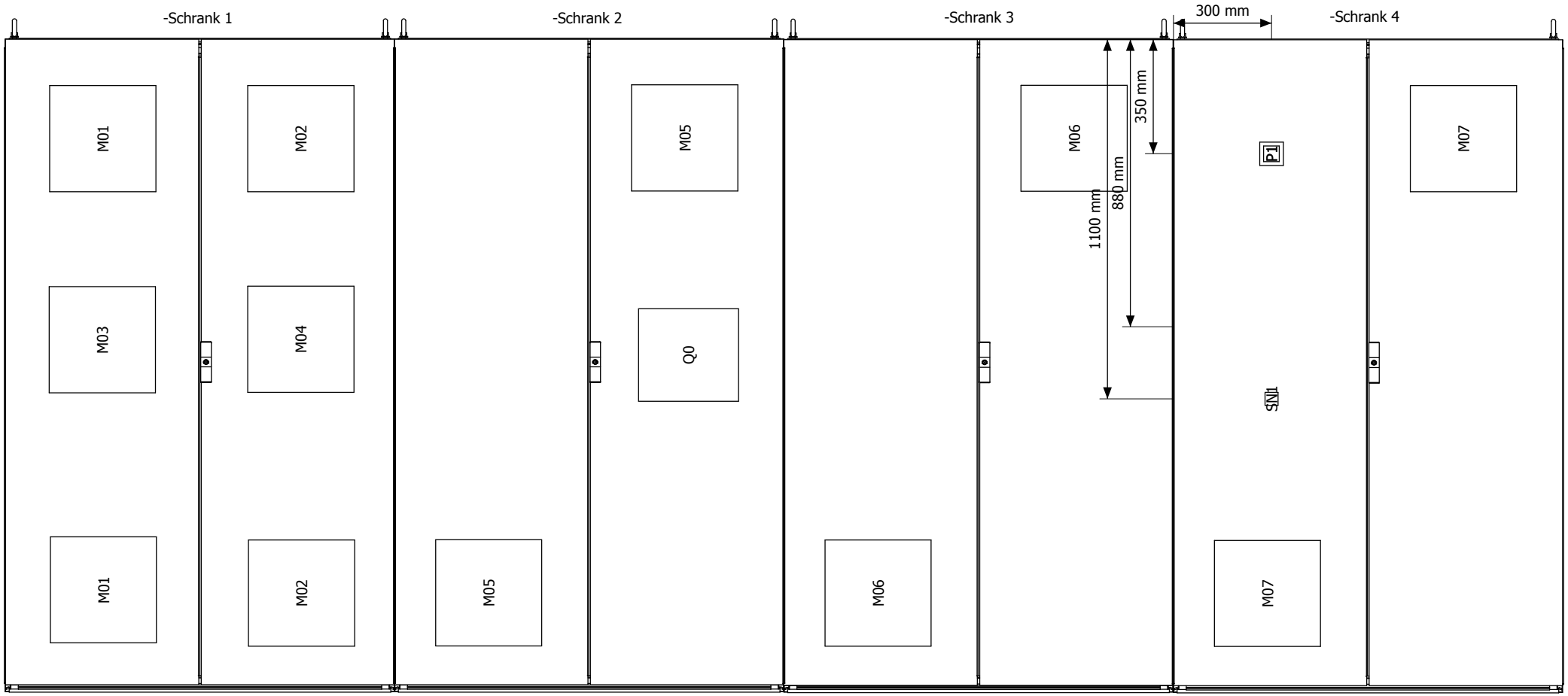

Duferco Clabecq

Management codes				Document identification				
5.3.0.0	CE	000	DW	QTPC	L04	ROSL	D	0049
System	Phase	Area	Typology	Project	Lot	Company	D/S	Number

+SA0/1 +SA2/1

Rev.	Date	Description	Prepared	Checked	Approved			
						Date	30.01.2012	
						Dus		
							Duferco (SBM 2) Schaltschrank	
							in place of	Replaced by

RÖSLER finding a better way ...

erection Enclosure

= AP
+ SA1

01-130070 00

Page 1
from 565

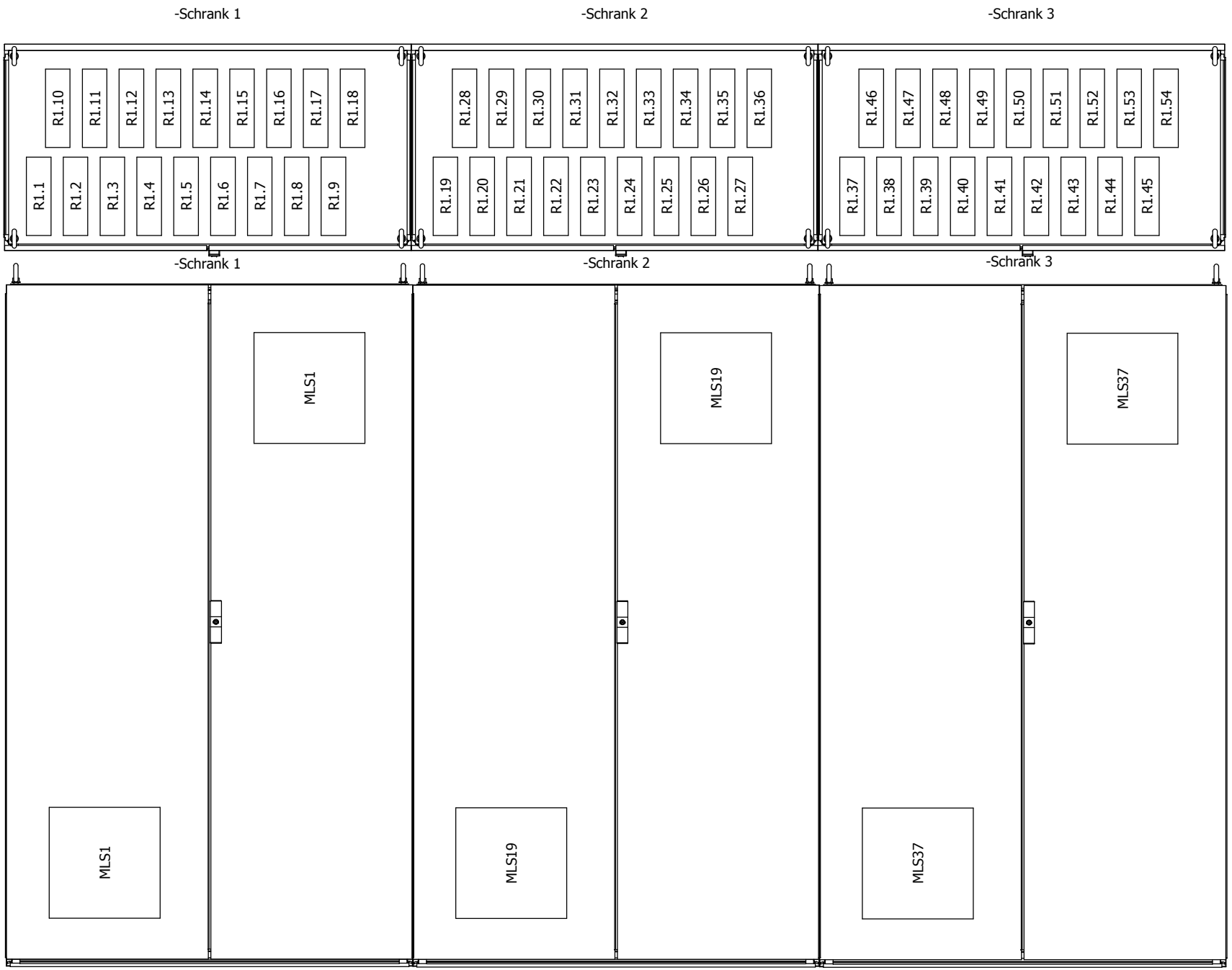

+SA1/1

Duferco Clabecq

Management codes				Document identification				
5.3.0.0	CE	000	DW	QTPC	L04	ROSL	D	0049
System	Phase	Area	Typology	Project	Lot	Company	D/S	Number

+SA3/1

Rev.	Date	Description	Prepared	Checked	Approved			
						Date	30.01.2012	
						Dus		

Duferco (SBM 2) Schaltschrank

in place of | Replaced by

RÖSLER finding a better way ...

erection Enclosure

= AP
+ SA2

01-130070 00

Page 1
from 565

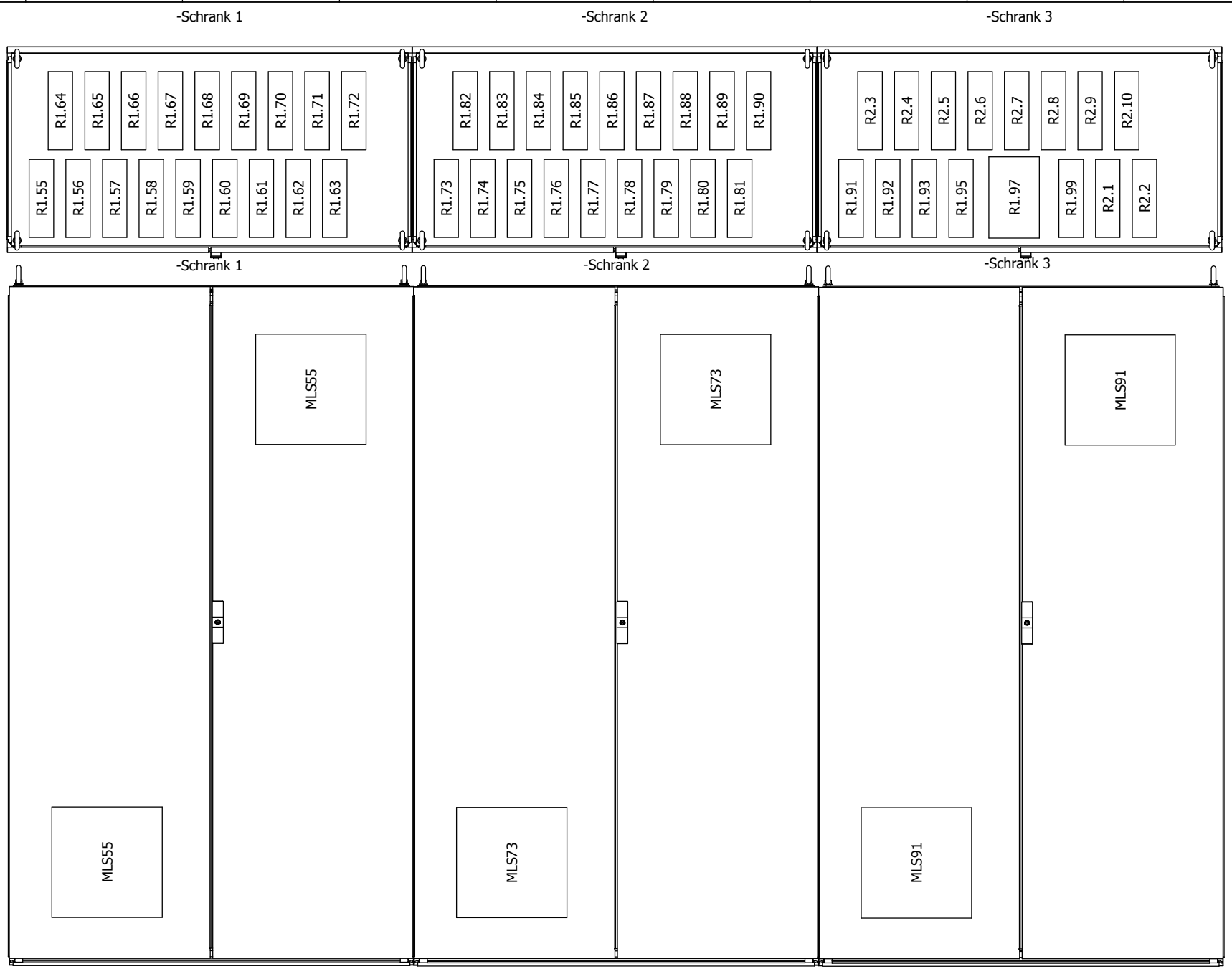

+SA2/1

Duferco Clabecq

Management codes				Document identification				
5.3.0.0	CE	000	DW	QTPC	L04	ROSL	D	0049
System	Phase	Area	Typology	Project	Lot	Company	D/S	Number

+SA4/1

						Date	30.01.2012	
						Dus		
Rev.	Date	Description	Prepared	Checked	Approved			

Duferco (SBM 2) Schaltschrank

in place of | Replaced by

RÖSLER finding a better way ...

erection Enclosure

= AP

+ SA3

01-130070 00

Page 1

from 565

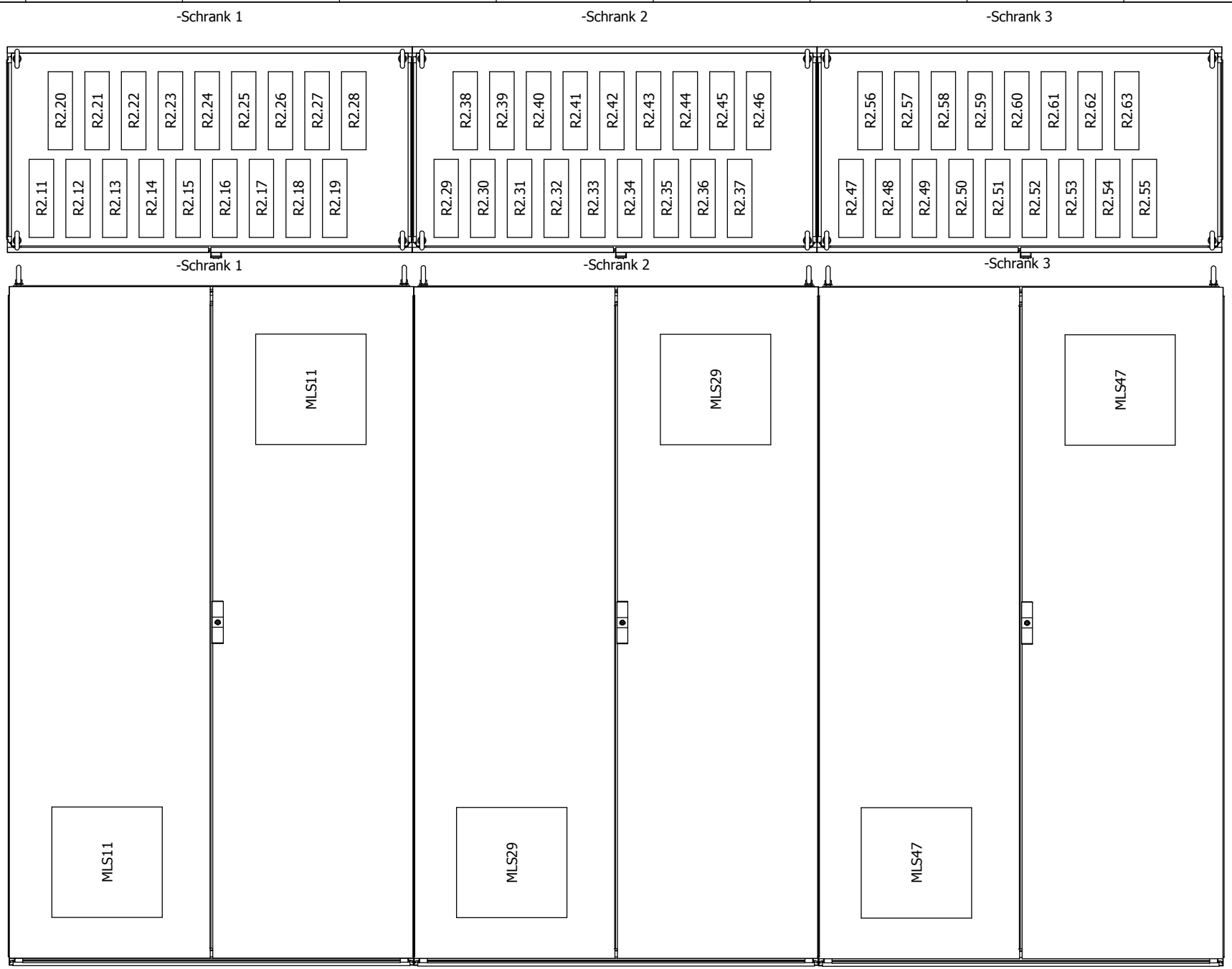

+SA3/1

Duferco Clabecq

Management codes				Document identification				
5.3.0.0	CE	000	DW	QTPC	L04	ROSL	D	0049
System	Phase	Area	Typology	Project	Lot	Company	D/S	Number

+BDP/1

						Date	30.01.2012	
						Dus		
Rev.	Date	Description	Prepared	Checked	Approved			

Duferco (SBM 2) Schaltschrank

in place of | Replaced by

RÖSLER finding a better way ...

erection Enclosure

= AP

+ SA4

01-130070 00

Page 1 from 565

Enclosure legend

=AP+BDP-LS

LS

3
2
1

Pos.	DT	Part nr.	Designation	function
1	PA62.6	200010720 ESIH2022	Leuchtsäule grün luminous column green	Anlage läuft system run
2	PA62.5	200010721 ESIH2032	Leuchtsäule Gelb luminous column yellow	Bediener Anfordern operator require
3	PA62.4	200010718 ESIH2012	Leuchtsäule rot luminous column red	Anlage Störung system fault

Enclosure legend

=AP+BDP-BDP-KONTROLLRAUM

Pos.	DT	Part nr.	Designation	function
1	AVW	200011984 ESTA4009	Thermostat thermostat	Vorwärmer preheater
2	SE13.4	200011088 ESIS3202	Wahlschalter selector switch	Vorwärmer Ein preheater on
3	PA25.0	200010756 ESIH3440	Lampe weiß Lamp white	Betriebsart Hand operation mode manual
4	PA25.1	200010756 ESIH3440	Lampe weiß Lamp white	Betriebsart Automatik operation mode automatic
5	SE12.0	200011102 ESIS3504	Schlüsselschalter key switch	Hand Aus Automatik manual off automatic
6	SSE	200011071 ESIS3125	Leuchtdrucktaster grün illuminated pushbutton green	Steuerspannung ein Control voltage on
7	PSE	200010752 ESIH3420	Lampe grün Lamp green	Steuerspannung ein Control voltage on
8	SE29.0	200011034 ESIS1005	Koordinatenschalter coordinate switch	Joystick
9	SN2	200011117 ESIS3901	Pilzdrucktaster mushroom pushbutton	Not-Aus Bedienpult Schlüsselschalter Emergency stop console key switch
9	XLKO1	200031234 ERIA0117	Steckdosenleiste multiple socket	
10	AE2	200031229 EHPA0002	Ethernet Switch	

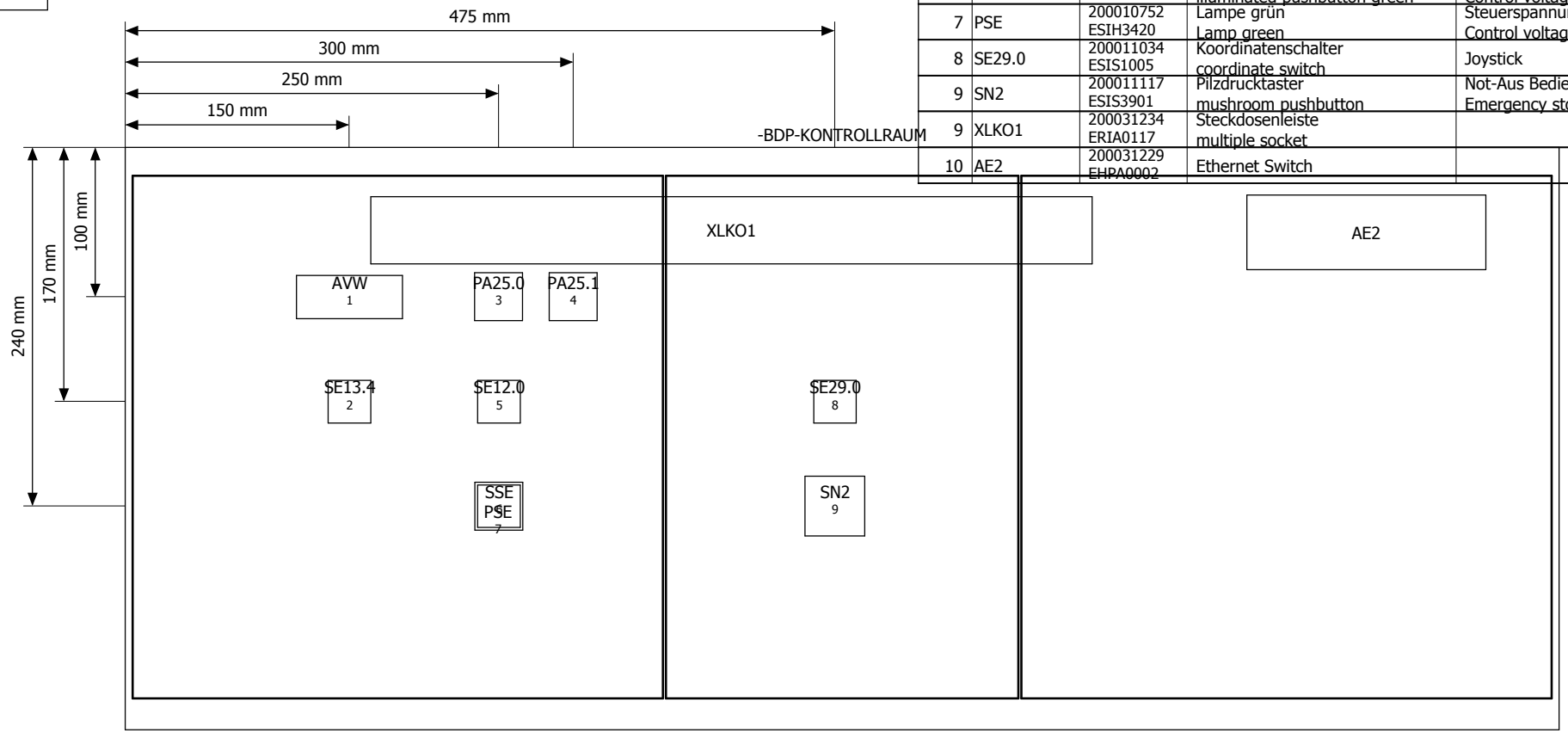

+SA4/1

Management codes				Document identification				
5.3.0.0	CE	000	DW	QTPC	L04	ROSL	D	0049
System	Phase	Area	Typology	Project	Lot	Company	D/S	Number

2

Rev.	Date	Description	Prepared	Checked	Approved	Date 30.01.2012 Dus	Duferco (SBM 2) Schaltschrank in place of	Replaced by

console control room

= AP
+ BDP

01-130070 00

Page 1
from 565

-XL11

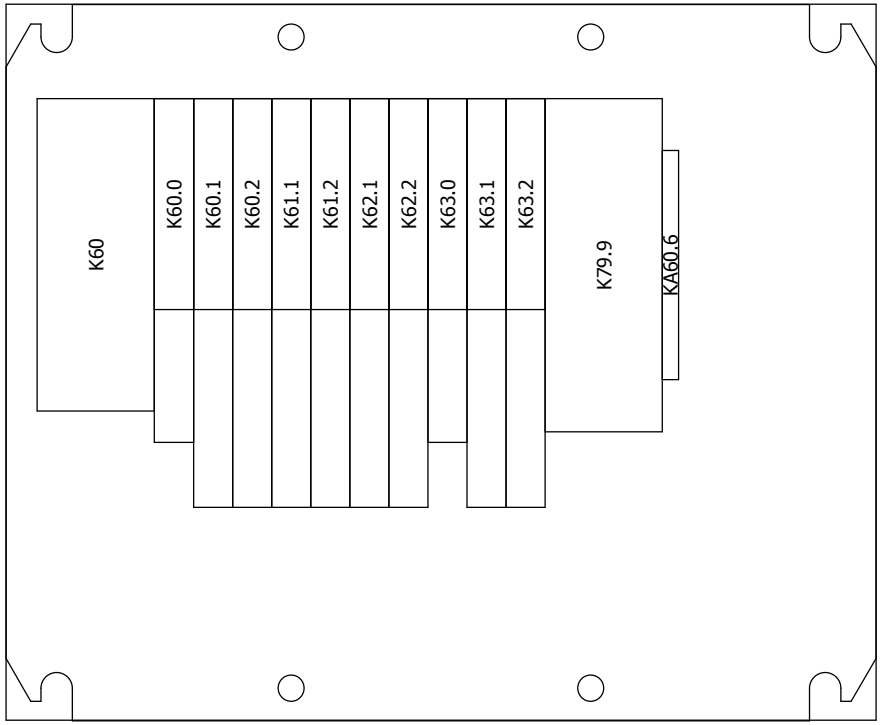

-KLEMMKASTEN_XL11

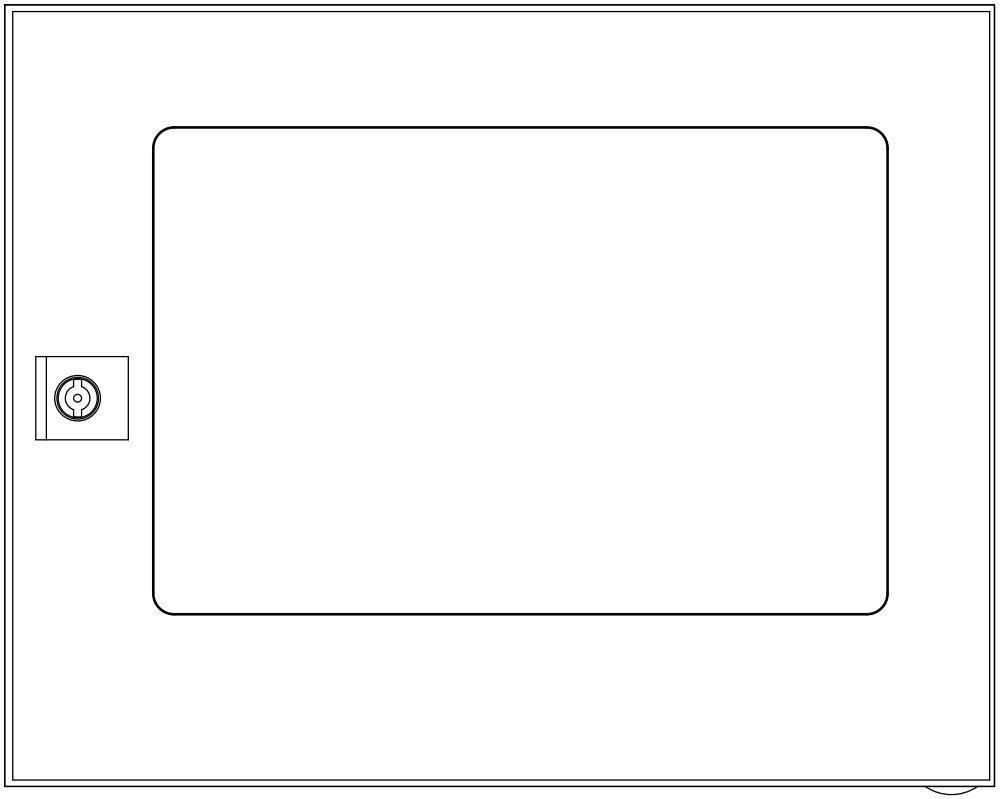

1 3

			Date	30.01.2012	Duferco (SBM 2) Schaltschrank	RÖSLER finding a better way ...	terminal box XL11	= AP	
			Ed. by	Dus				+ BDP	
			Appr						Page 2
Modification	Date	Name	Original		in place of	Replaced by			from 565

-Klemmkasten_XL12

-XL12

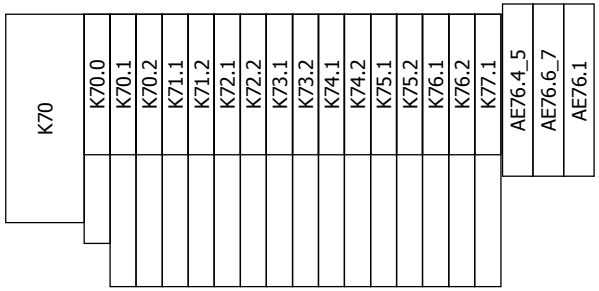

2

4

			Date	30.01.2012	Duferco (SBM 2) Schaltschrank	RÖSLER finding a better way ...	terminal box XL12		= AP	
			Ed. by	Dus					+ BDP	
			Appr							Page 3
Modification	Date	Name	Original		in place of	Replaced by				from 565

-XL13

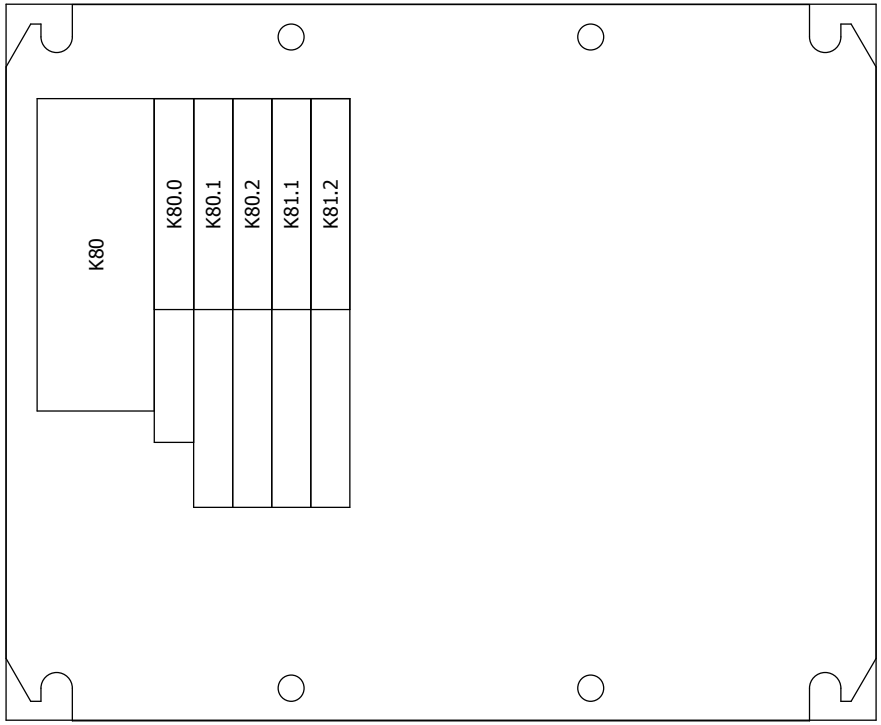

-KLEMMKASTEN_XL13

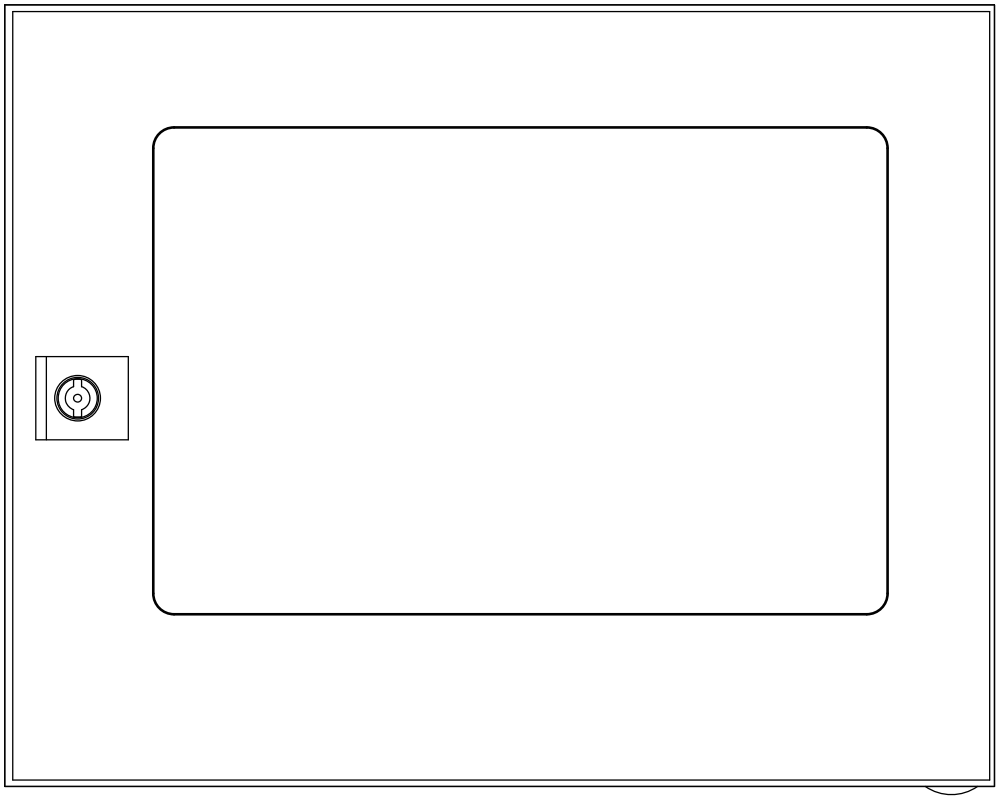

3 5

			Date	30.01.2012			terminal box XL13		= AP	
			Ed. by	Dus					+ BDP	
			Appr		Duferco (SBM 2) Schaltschrank					Page 4
Modification	Date	Name	Original		in place of	Replaced by				from 565

RÖSLER finding a better way ...

-XL14

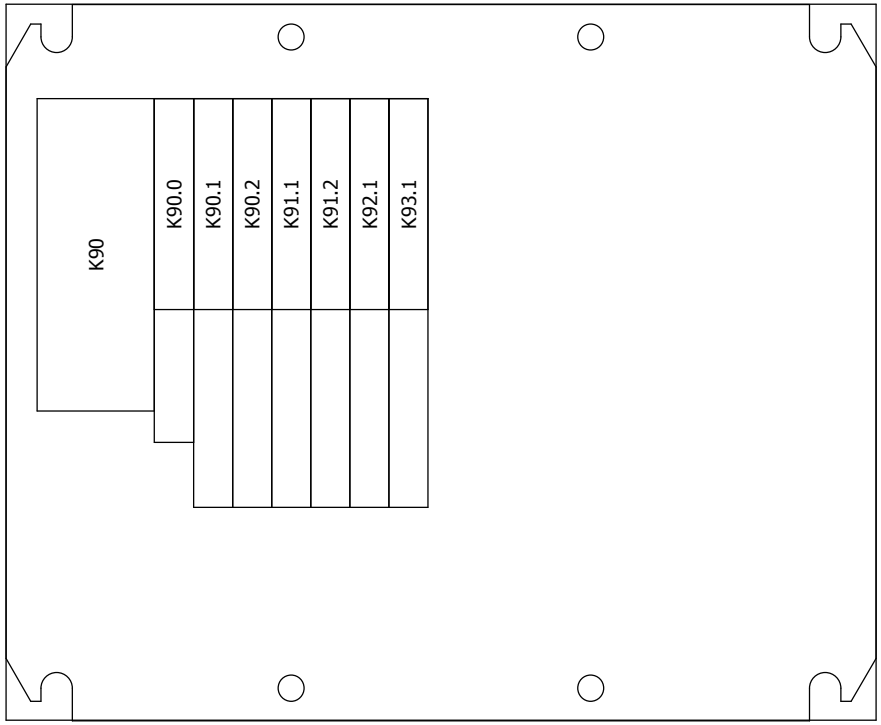

-KLEMMKASTEN_XL14

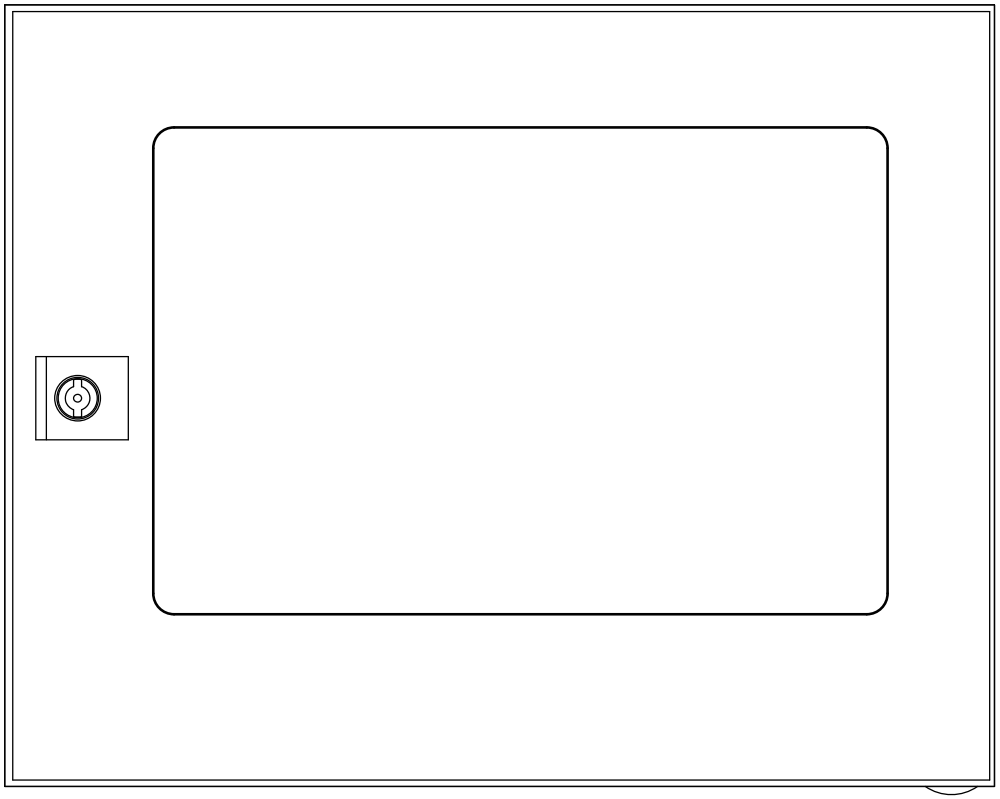

4

6

			Date	30.01.2012			terminal box XL14		= AP	
			Ed. by	Dus					+ BDP	
			Appr		Duferco (SBM 2) Schaltschrank					Page 5
Modification	Date	Name	Original		in place of	Replaced by				from 565

RÖSLER finding a better way ...

-BPNA7

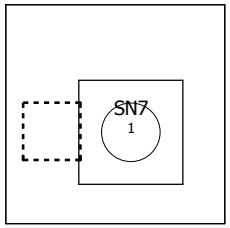

Enclosure legend

=AP+BDP-BPNA7

Pos.	DT	Part nr.	Designation	function
1	SN7	200011117 ESIS3901	Pilzdrucktaster mushroom pushbutton	Not-Aus Strahlanlage Emergency stop blasting system

-BPNA8

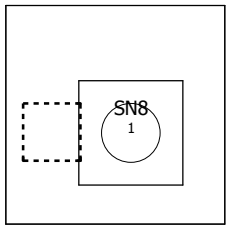

Enclosure legend

=AP+BDP-BPNA8

Pos.	DT	Part nr.	Designation	function
1	SN8	200011117 ESIS3901	Pilzdrucktaster mushroom pushbutton	Not-Aus Filter Emergency stop Filter

-BPNA9

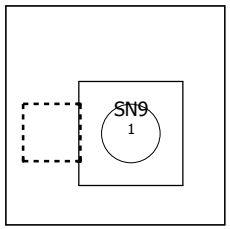

Enclosure legend

=AP+BDP-BPNA9

Pos.	DT	Part nr.	Designation	function
1	SN9	200011117 ESIS3901	Pilzdrucktaster mushroom pushbutton	Not-Aus Links Emergency stop left

-GPKK1

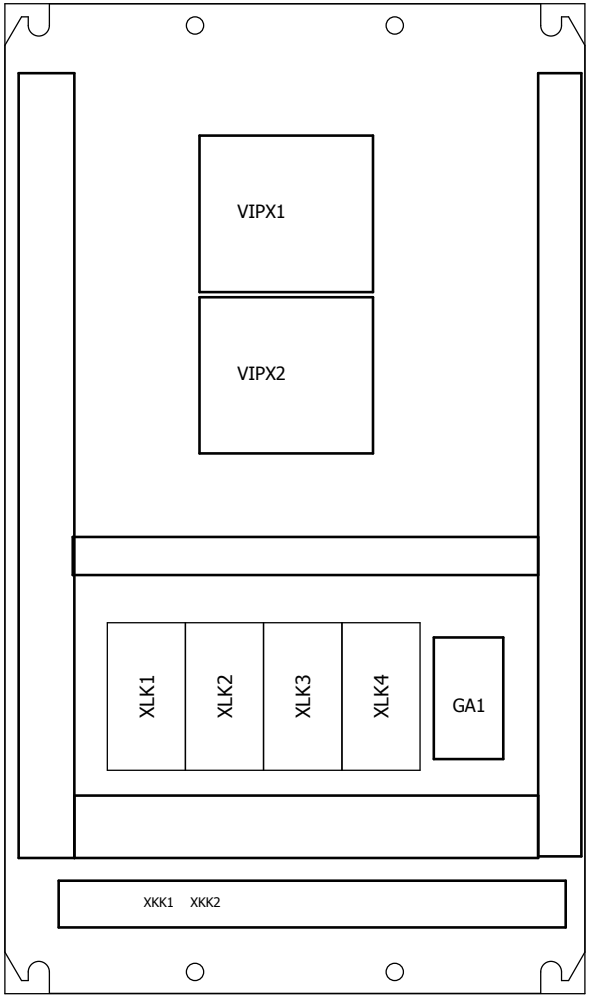

-XKK1

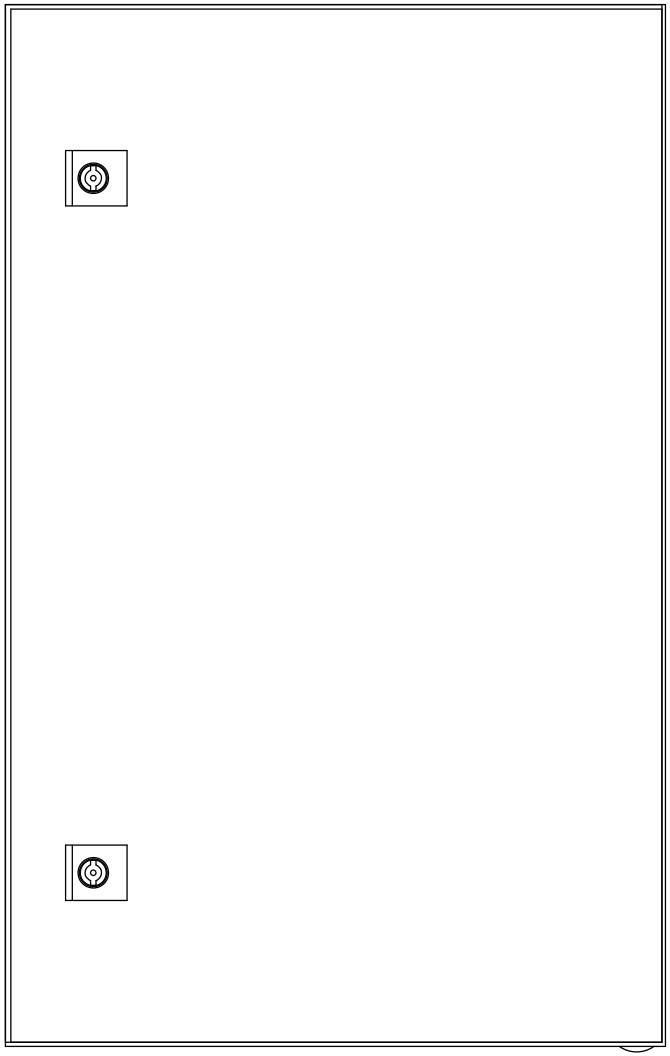

Management codes				Document identification				
5.3.0.0	CE	000	DW	QTPC	L04	ROSL	D	0049
System	Phase	Area	Typology	Project	Lot	Company	D/S	Number

Duferco Clabecq

						Date	30.01.2012	Duferco (SBM 2) Schaltschrank	
						Dus			
Rev.	Date	Description	Prepared	Checked	Approved			in place of	Replaced by

RÖSLER finding a better way ...

terminal box camera

= AP
+ BDP

01-130070 00

Page 7
from 565

-BPT1

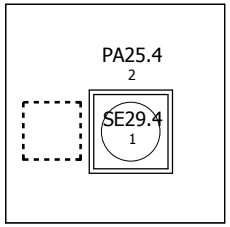

Enclosure legend

=AP+BDP-BPT1

Pos.	DT	Part nr.	Designation	function
1	SE29.4	200011081 ESIS3155	Leuchtdrucktaster blau illuminated pushbutton blue	Türverriegelung Tür 1 Einlauf öffnen / schließen door lock door 1 inlet open / close
2	PA25.4	200010759 ESIH3451	Lampe blau Lamp blue	Tür 1 Einlauf SBM2 door 1 inlet SBM2

-BPT2

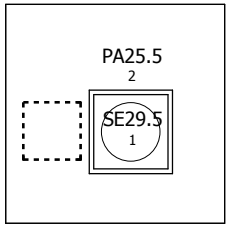

Enclosure legend

=AP+BDP-BPT2

Pos.	DT	Part nr.	Designation	function
1	SE29.5	200011081 ESIS3155	Leuchtdrucktaster blau illuminated pushbutton blue	Türverriegelung Tür 2 Einlauf öffnen / schließen door lock door 2 inlet open / close
2	PA25.5	200010759 ESIH3451	Lampe blau Lamp blue	Tür 2 Einlauf SBM2 door 2 inlet SBM2

-BPT3

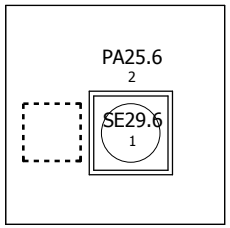

Enclosure legend

=AP+BDP-BPT3

Pos.	DT	Part nr.	Designation	function
1	SE29.6	200011081 ESIS3155	Leuchtdrucktaster blau illuminated pushbutton blue	Türverriegelung Tür 1 Auslauf öffnen / schließen door lock door 1 outlet open / close
2	PA25.6	200010759 ESIH3451	Lampe blau Lamp blue	Tür 1 Auslauf SBM2 door 1 outlet SBM2

-BPT4

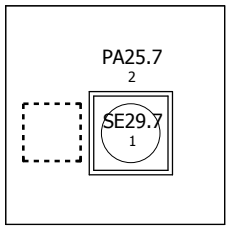

Enclosure legend

=AP+BDP-BPT4

Pos.	DT	Part nr.	Designation	function
1	SE29.7	200011081 ESIS3155	Leuchtdrucktaster blau illuminated pushbutton blue	Türverriegelung Tür 2 Auslauf öffnen / schließen door lock door 2 outlet open / close
2	PA25.7	200010759 ESIH3451	Lampe blau Lamp blue	Tür 2 Auslauf SBM2 door 2 outlet SBM2

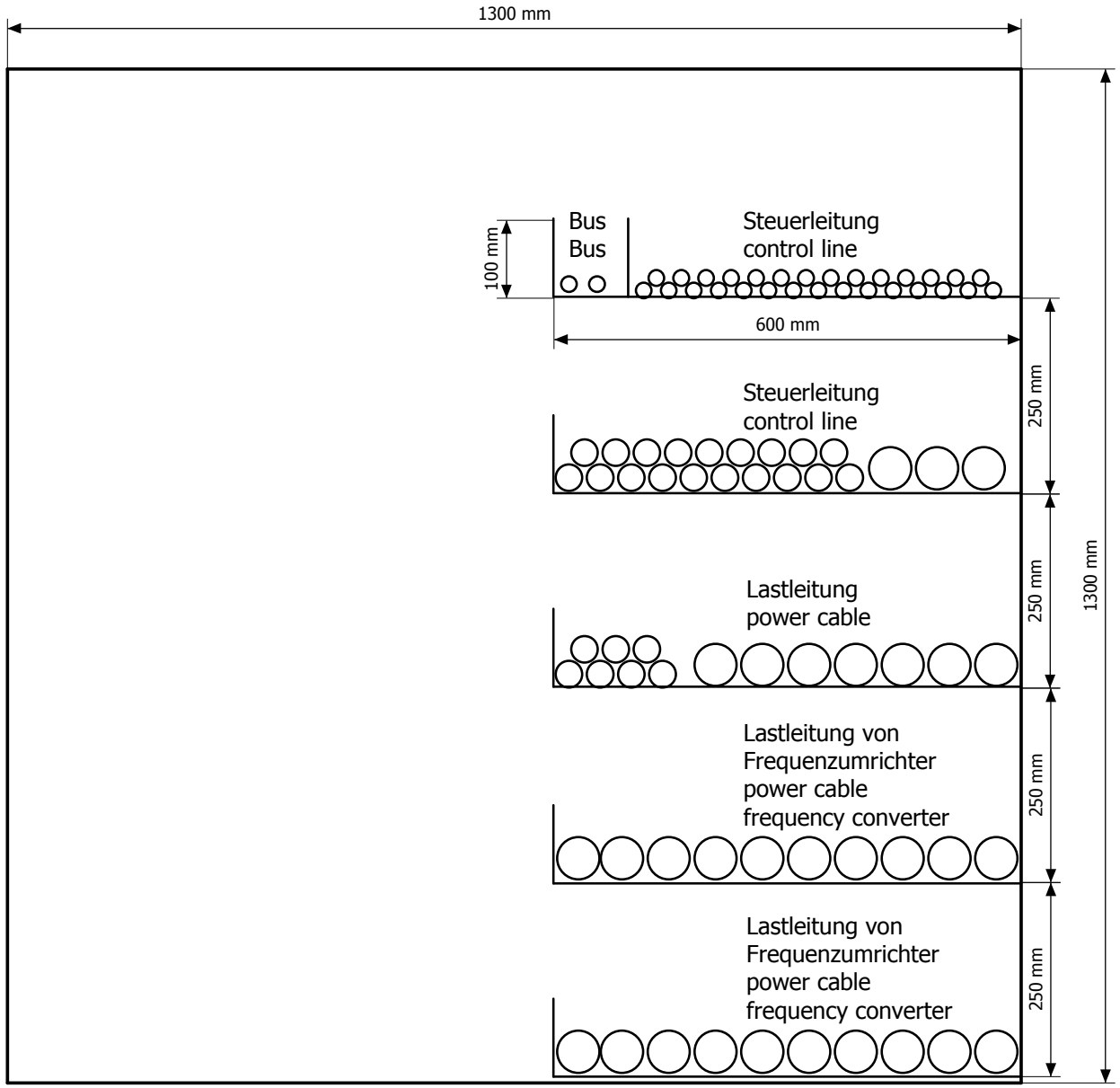

Anforderungen an das Kabelrinnensystem:

Standart Breite = 600mm Kabelrinne
Mindestbreite Kabelauslass = 600mm
maximale Entfernung zwischen Kabelrinne = 250mm
maximale Entfernung zwischen Kabelrinnenträgern = 3000mm
(Nicht mehr als eine Schicht Leitungen legen,
sonst Kabelrinnenträger in einem kürzeren Abstand montieren.)
Installieren Sie Bus-und Steuerkabel getrennt vom Laststromkabel.

Requirements cable tray

standart width cable tray = 600mm
minimum width escape route = 600mm
maximum distance between cabletrays = 250mm
maximum distance between carrieres = 3000mm
(Not more than one-layer laying,
otherwise carrieeres in a shorter distance.)
Install bus and control cable separate from power cable)

Abmessungen Kabelrinnenschacht:
1300mm x 1300mm

Dimension cable channel:
1300mm x 1300mm

Duferco Clabecq

Management codes				Document identification				
5.3.0.0	CE	000	DW	QTPC	L04	ROSL	D	0049
System	Phase	Area	Typology	Project	Lot	Company	D/S	Number

=AP+BDP/8

2

Rev.	Date	Description	Prepared	Checked	Approved			
						Date	30.01.2012	
						Dus		
0	25.08.10	Overview cable channels SBM 2	StB					

Duferco (SBM 2) Schaltschrank

in place of | Replaced by

RÖSLER finding a better way ...

Übersicht Kabelrinnen

= AP LEITUNGSSCHACHT
+ LSA

01-130070 00

Page 1
from 565

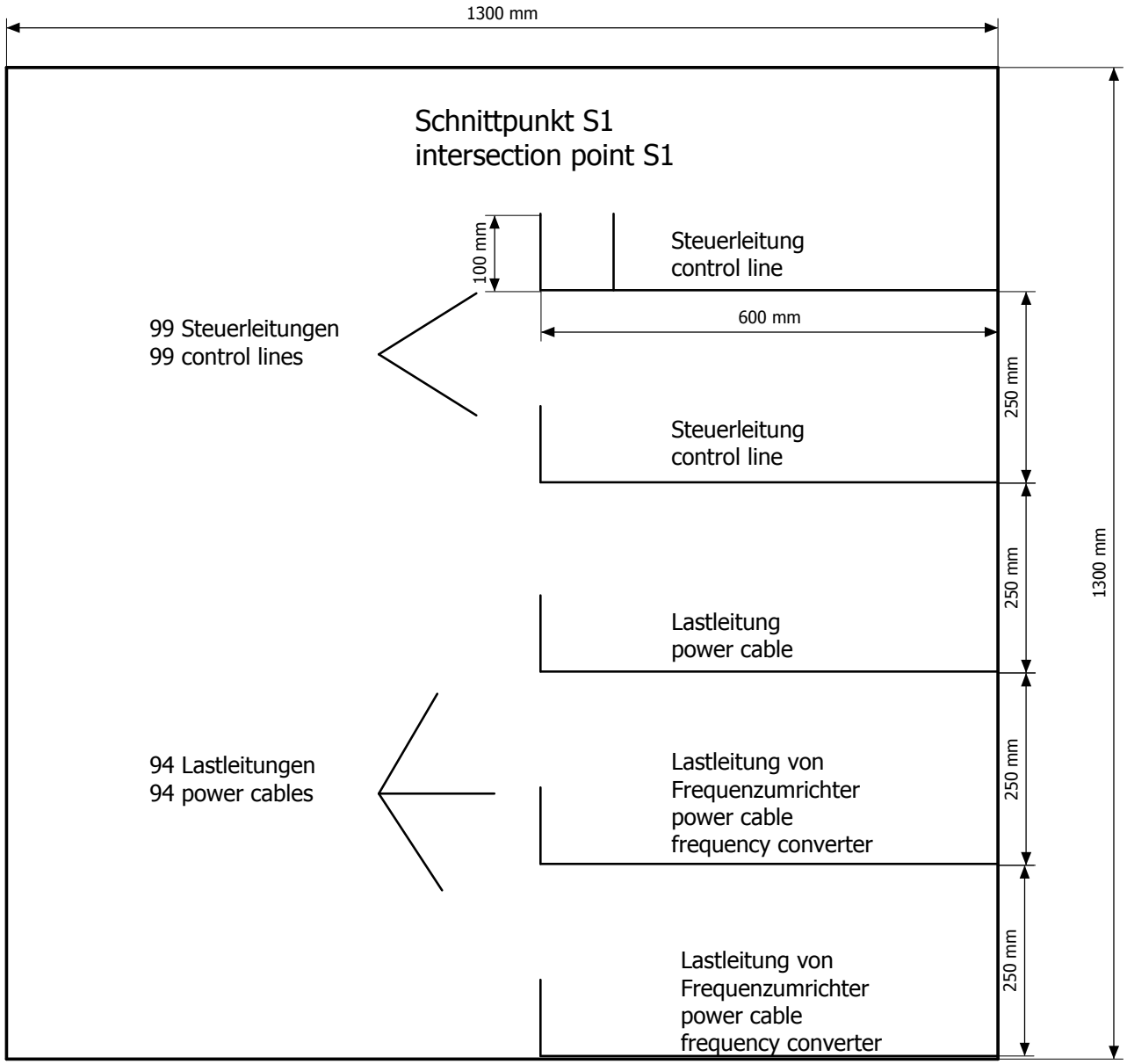

Duferco Clabecq

Management codes				Document identification				
5.3.0.0	CE	000	DW	QTPC	L04	ROSL	D	0049
System	Phase	Area	Typology	Project	Lot	Company	D/S	Number

1 3

Rev.	Date	Description	Prepared	Checked	Approved			
						Date	30.01.2012	
						Dus		
0	25.08.10	Overview cable channels SBM 2	StB					

Duferco (SBM 2) Schaltschrank

in place of | Replaced by

RÖSLER finding a better way ...

Schnittpunkt S1

= AP LEITUNGSSCHACHT
+ LSA

01-130070 00

Page 2
from 565

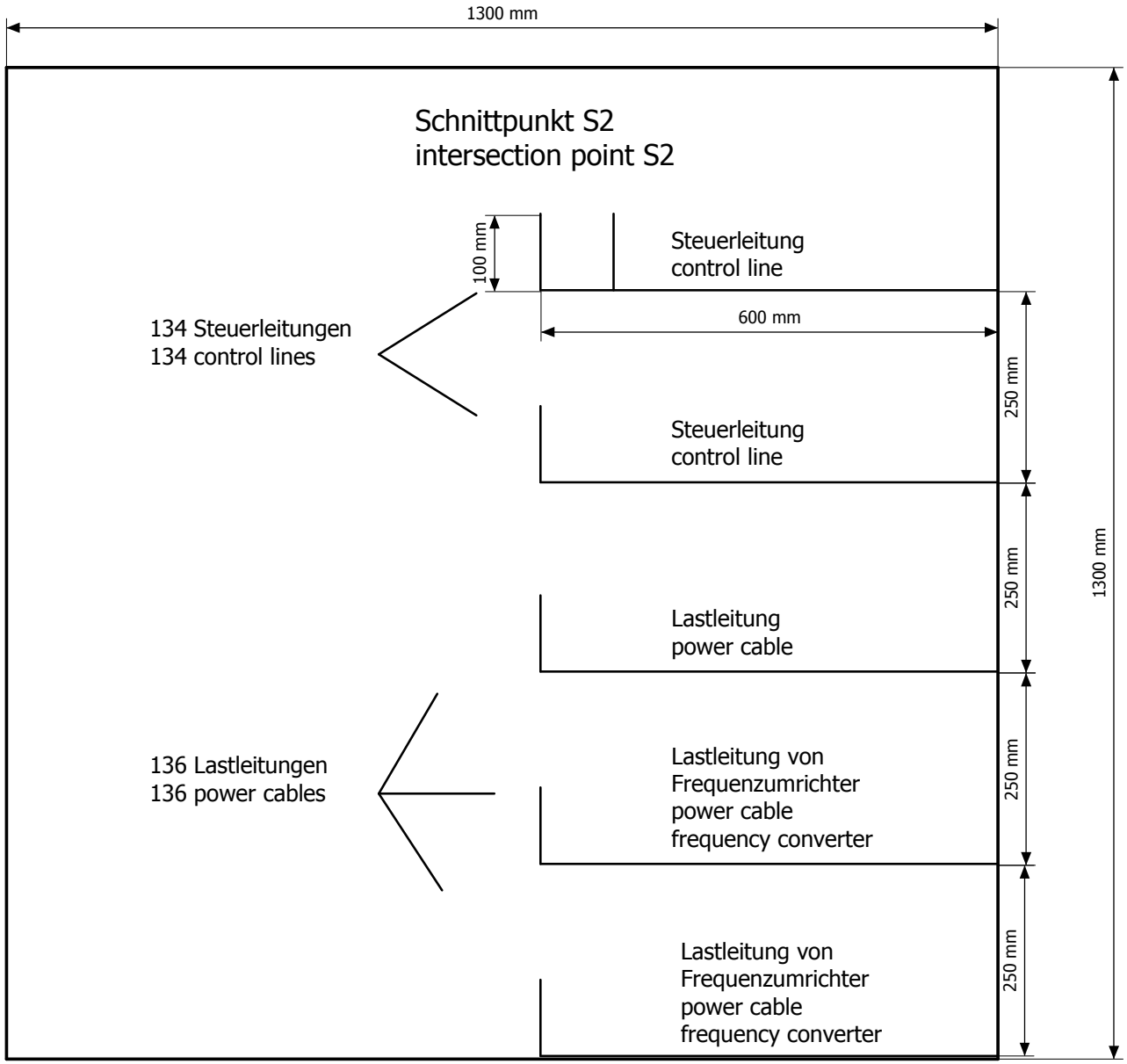

Duferco Clabecq

Management codes				Document identification				
5.3.0.0	CE	000	DW	QTPC	L04	ROSL	D	0049
System	Phase	Area	Typology	Project	Lot	Company	D/S	Number

2 4

Rev.	Date	Description	Prepared	Checked	Approved			
						Date	30.01.2012	
						Dus		
0	25.08.10	Overview cable channels SBM 2	StB					

Duferco (SBM 2) Schaltschrank

in place of | Replaced by

RÖSLER finding a better way ...

Schnittpunkt S2

= AP LEITUNGSSCHACHT
+ LSA

01-130070 00

Page 3
from 565

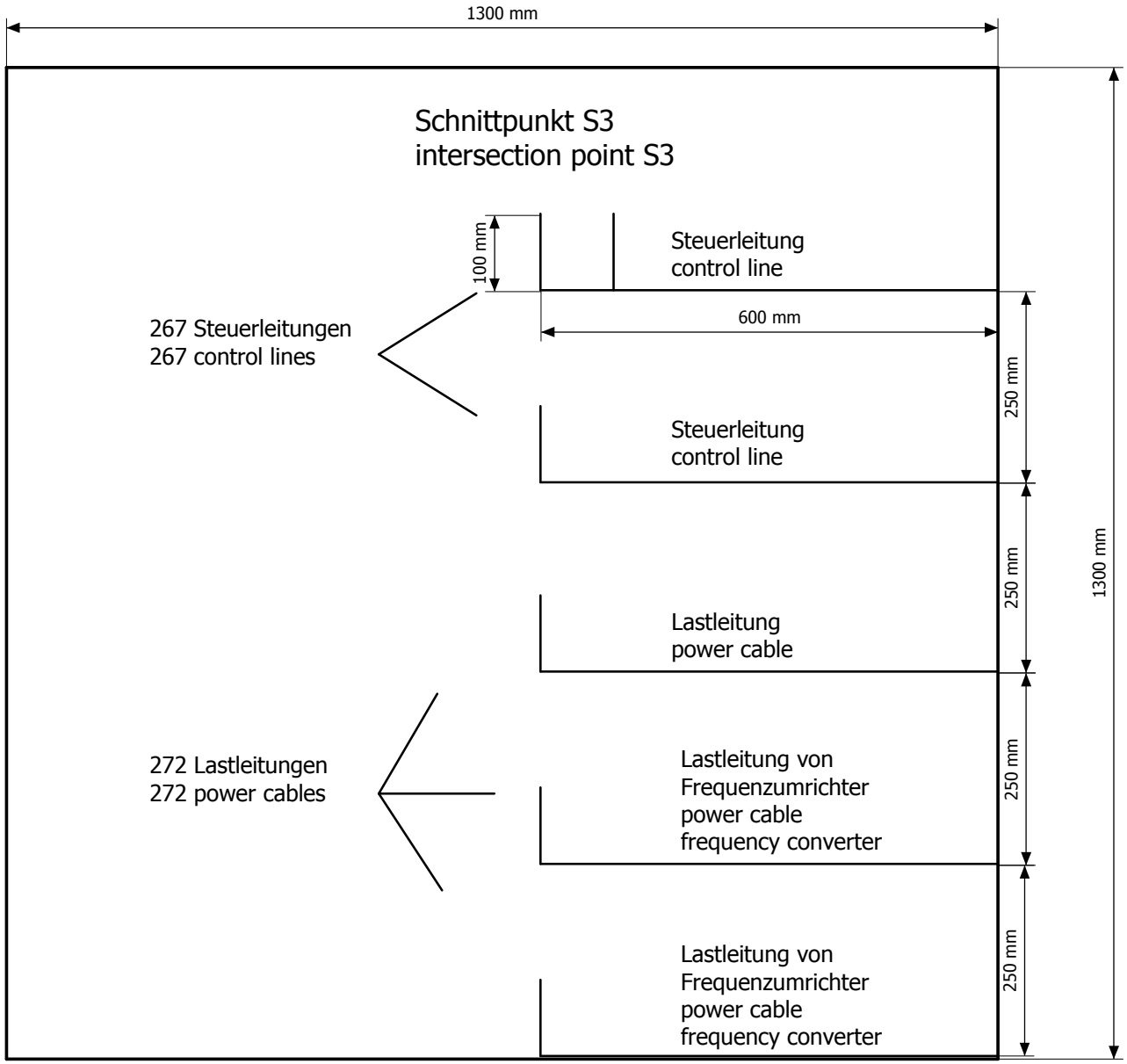

Duferco Clabecq

Management codes				Document identification				
5.3.0.0	CE	000	DW	QTPC	L04	ROSL	D	0049
System	Phase	Area	Typology	Project	Lot	Company	D/S	Number

3 5

Rev.	Date	Description	Prepared	Checked	Approved			
						Date	30.01.2012	
						Dus		
0	25.08.10	Overview cable channels SBM 2	StB					

Duferco (SBM 2) Schaltschrank

in place of | Replaced by

RÖSLER finding a better way ...

Schnittpunkt S3

= AP LEITUNGSSCHACHT
+ LSA

01-130070 00

Page 4
from 565

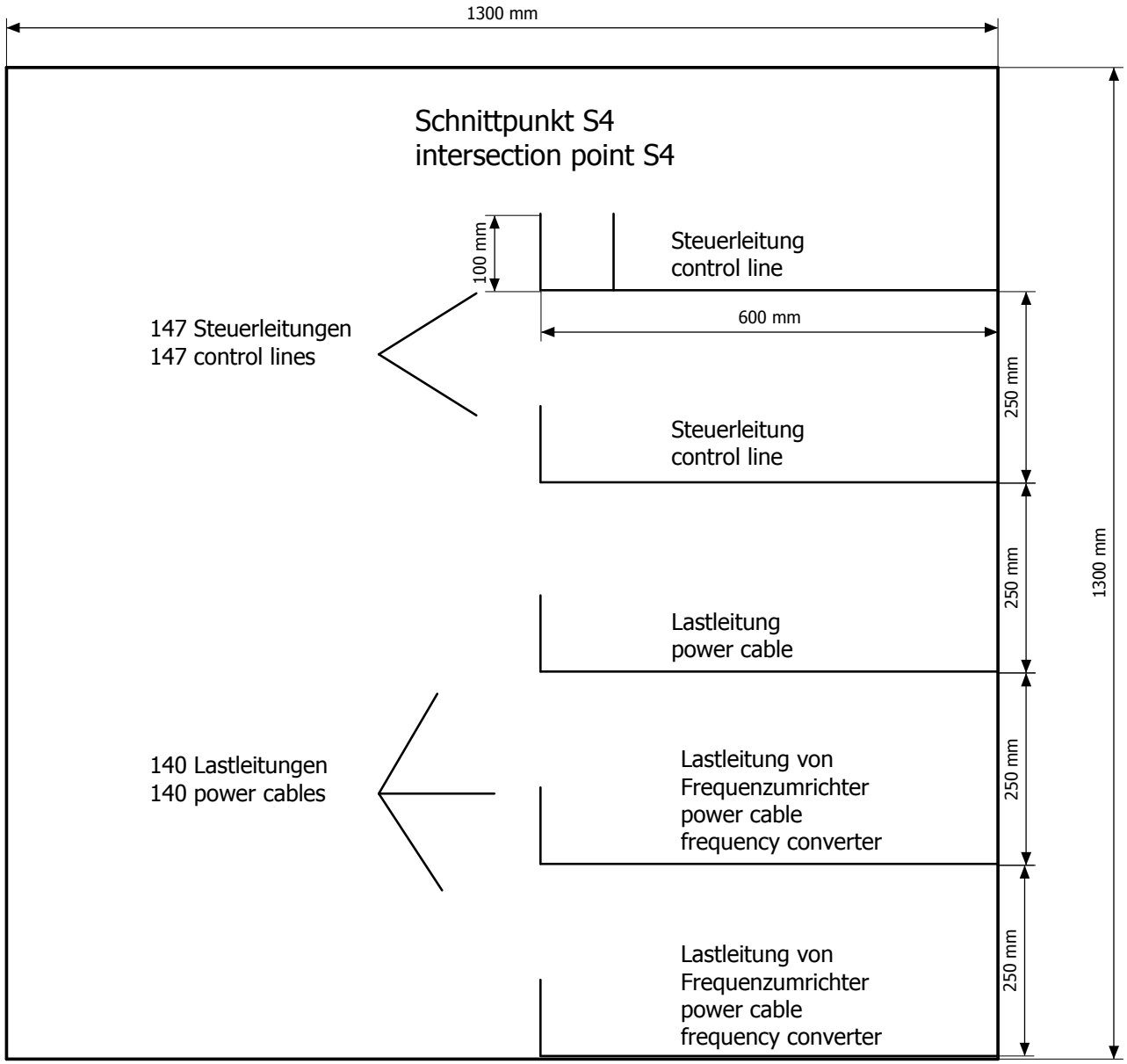

Duferco Clabecq

Management codes				Document identification				
5.3.0.0	CE	000	DW	QTPC	L04	ROSL	D	0049
System	Phase	Area	Typology	Project	Lot	Company	D/S	Number

4 6

Rev.	Date	Description	Prepared	Checked	Approved			
						Date	30.01.2012	
						Dus		
0	25.08.10	Overview cable channels SBM 2	StB					

Duferco (SBM 2) Schaltschrank

in place of | Replaced by

RÖSLER finding a better way ...

Schnittpunkt S4

= AP LEITUNGSSCHACHT
+ LSA

01-130070 00

Page 5 from 565

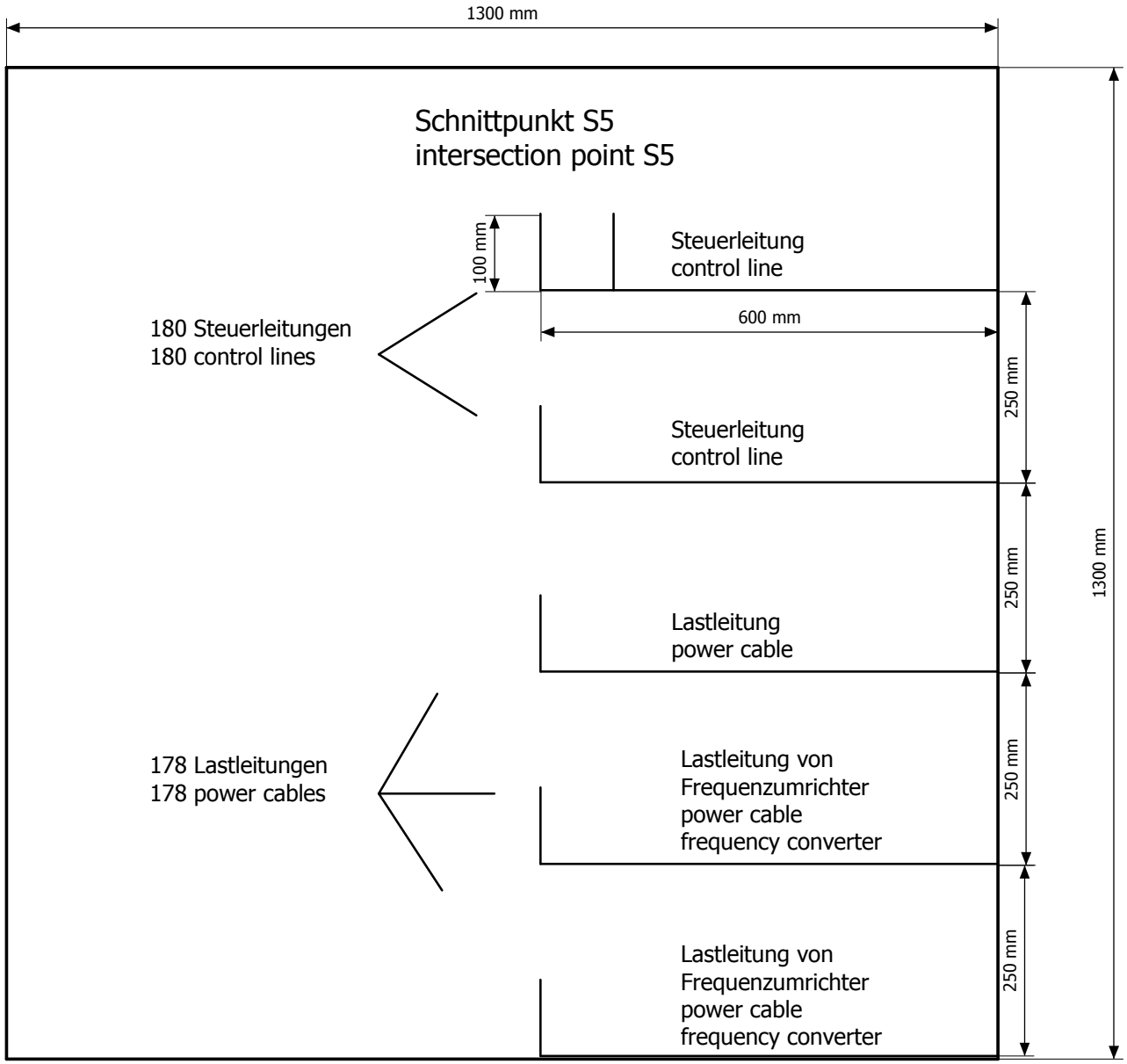

Duferco Clabecq

Management codes				Document identification				
5.3.0.0	CE	000	DW	QTPC	L04	ROSL	D	0049
System	Phase	Area	Typology	Project	Lot	Company	D/S	Number

Rev.	Date	Description	Prepared	Checked	Approved			
						Date	30.01.2012	
						Dus		
0	25.08.10	Overview cable channels SBM 2	StB					

Duferco (SBM 2) Schaltschrank

in place of | Replaced by

RÖSLER finding a better way ...

Schnittpunkt S5

= AP LEITUNGSSCHACHT
+ LSA

01-130070 00

Page 6 from 565

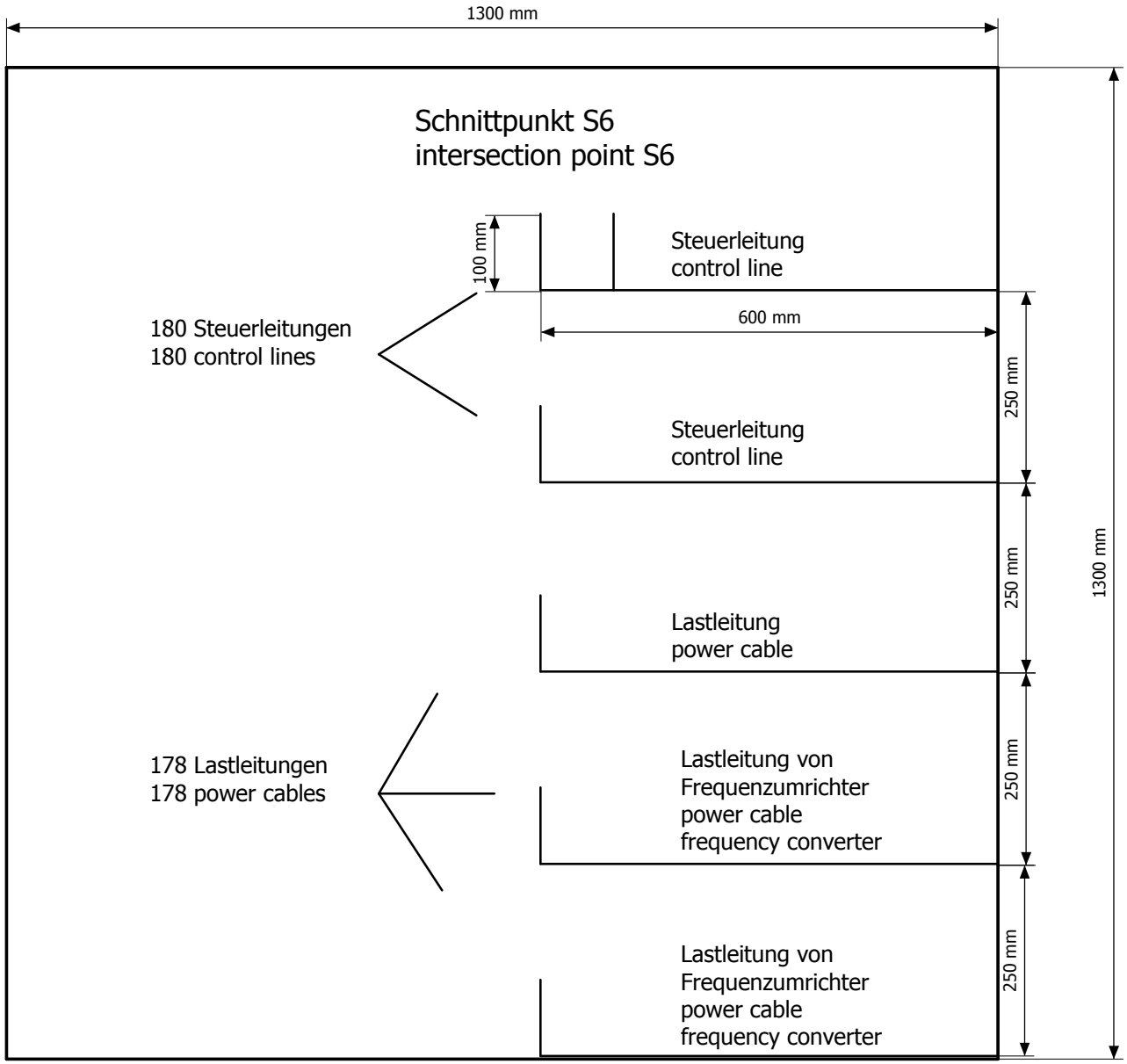

Duferco Clabecq

Management codes				Document identification				
5.3.0.0	CE	000	DW	QTPC	L04	ROSL	D	0049
System	Phase	Area	Typology	Project	Lot	Company	D/S	Number

6 8

Rev.	Date	Description	Prepared	Checked	Approved			
						Date	30.01.2012	
						Dus		
0	25.08.10	Overview cable channels SBM 2	StB					

Duferco (SBM 2) Schaltschrank

in place of | Replaced by

RÖSLER finding a better way ...

Schnittpunkt S6

= AP LEITUNGSSCHACHT
+ LSA

01-130070 00

Page 7
from 565

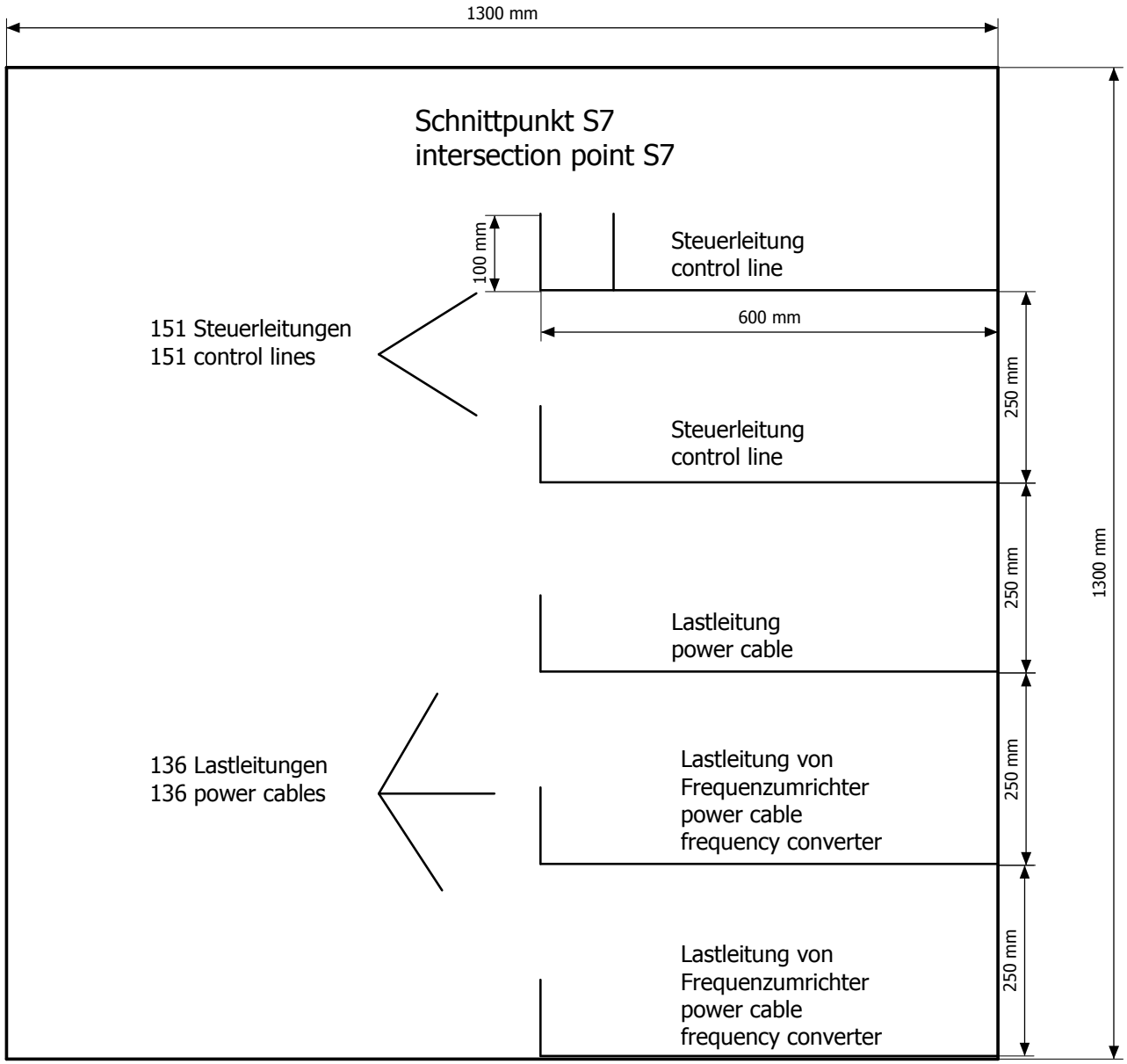

Duferco Clabecq

Management codes				Document identification				
5.3.0.0	CE	000	DW	QTPC	L04	ROSL	D	0049
System	Phase	Area	Typology	Project	Lot	Company	D/S	Number

Rev.	Date	Description	Prepared	Checked	Approved			
						Date	30.01.2012	
						Dus		
0	25.08.10	Overview cable channels SBM 2	StB					

Duferco (SBM 2) Schaltschrank

in place of | Replaced by

RÖSLER finding a better way ...

Schnittpunkt S7

= AP LEITUNGSSCHACHT
+ LSA

01-130070 00

Page 8
from 565

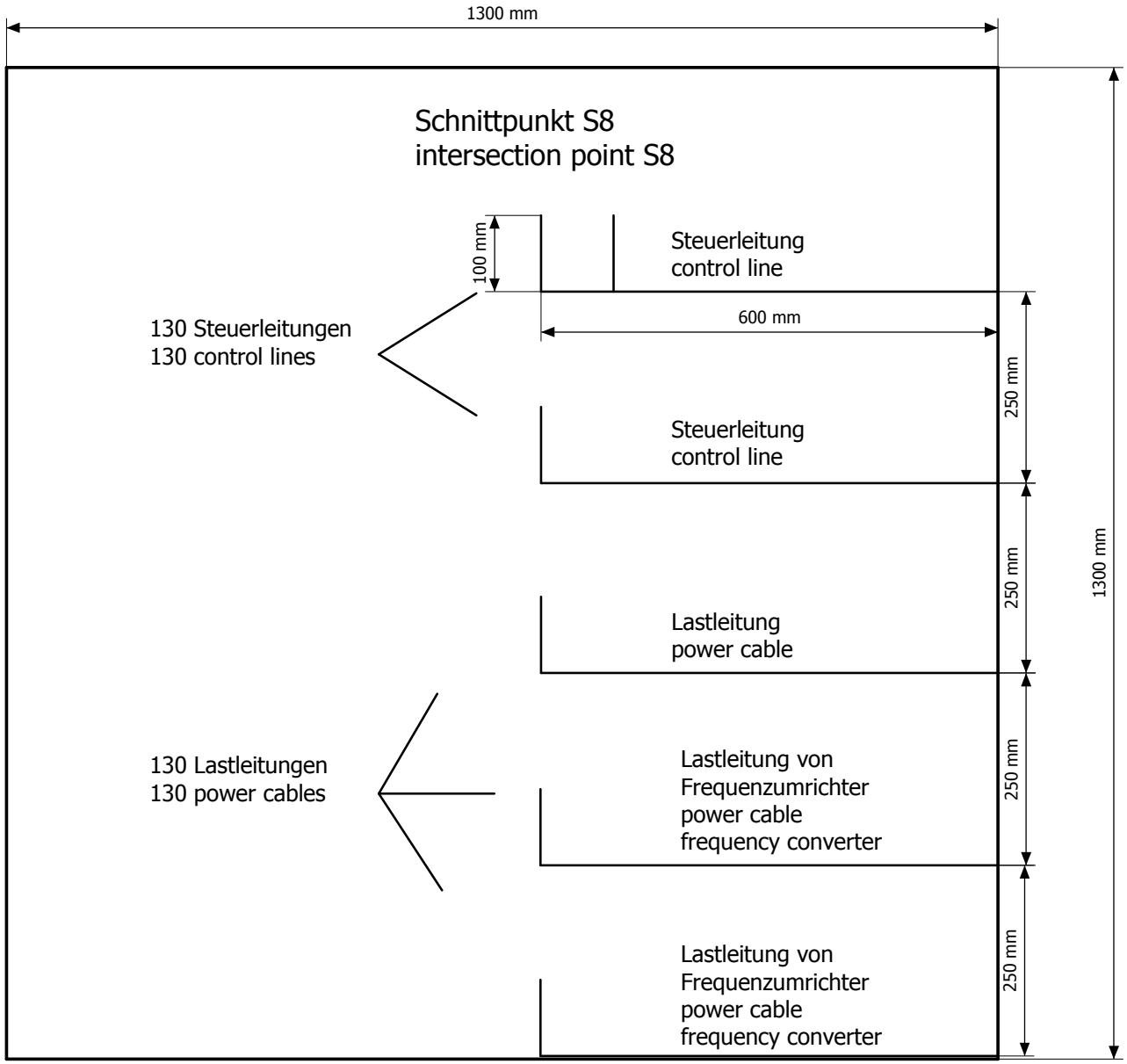

Duferco Clabecq

Management codes				Document identification				
5.3.0.0	CE	000	DW	QTPC	L04	ROSL	D	0049
System	Phase	Area	Typology	Project	Lot	Company	D/S	Number

8 10

Rev.	Date	Description	Prepared	Checked	Approved			
						Date	30.01.2012	
						Dus		
0	25.08.10	Overview cable channels SBM 2	StB					

Duferco (SBM 2) Schaltschrank

in place of | Replaced by

RÖSLER finding a better way ...

Schnittpunkt S8

= AP LEITUNGSSCHACHT
+ LSA

01-130070 00

Page 9
from 565

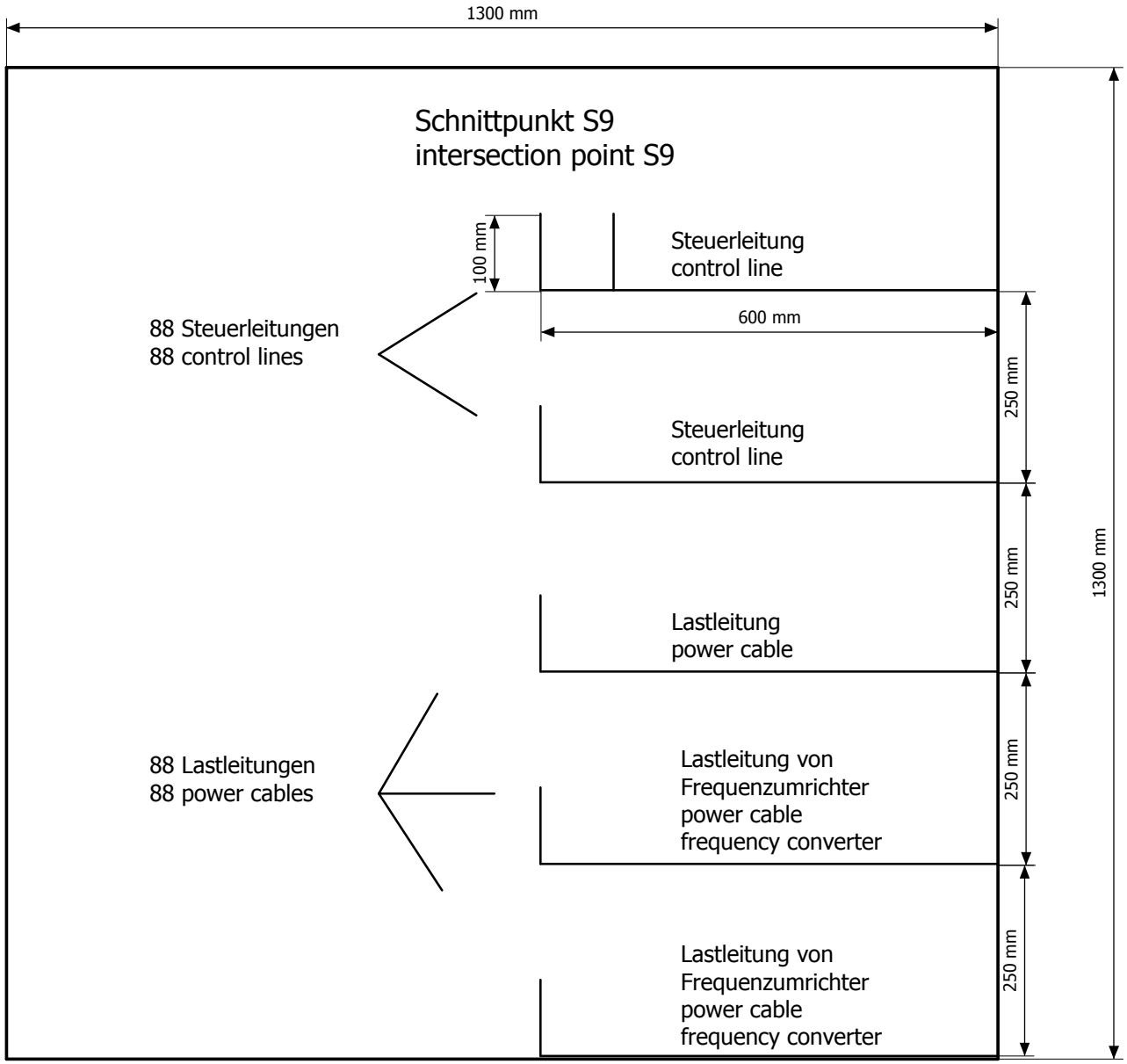

Duferco Clabecq

Management codes				Document identification				
5.3.0.0	CE	000	DW	QTPC	L04	ROSL	D	0049
System	Phase	Area	Typology	Project	Lot	Company	D/S	Number

9 11

Rev.	Date	Description	Prepared	Checked	Approved			
						Date	30.01.2012	
						Dus		
0	25.08.10	Overview cable channels SBM 2	StB					

Duferco (SBM 2) Schaltschrank

in place of | Replaced by

RÖSLER finding a better way ...

Schnittpunkt S9

= AP LEITUNGSSCHACHT
+ LSA

01-130070 00

Page 10
from 565

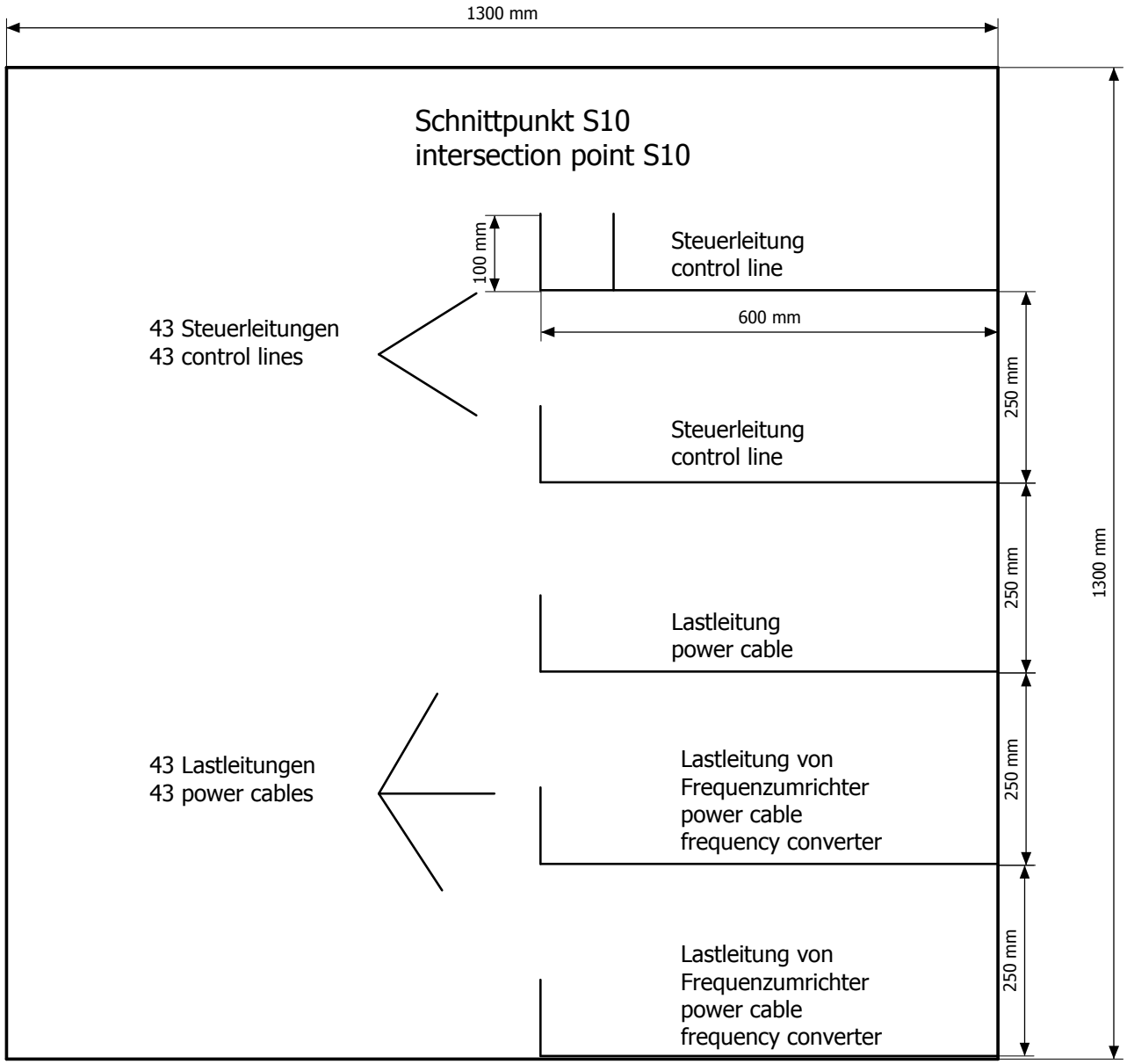

Duferco Clabecq

Management codes				Document identification				
5.3.0.0	CE	000	DW	QTPC	L04	ROSL	D	0049
System	Phase	Area	Typology	Project	Lot	Company	D/S	Number

=KP+/1

10

Rev.	Date	Description	Prepared	Checked	Approved			
						Date	30.01.2012	
						Dus		
0	25.08.10	Overview cable channels SBM 2	StB					

Duferco (SBM 2) Schaltschrank

in place of | Replaced by

RÖSLER finding a better way ...

Schnittpunkt S10

= AP LEITUNGSSCHACHT
+ LSA

01-130070 00

Page 11
from 565

Terminal-strip overview

Klemmenleistenübersicht_SAP_001

Terminal strip	Terminal strip definition text	Terminals					Graphical page of terminal diagrams
		first	last	Total PE	Total N	Total number	
=ER3+H09-X10		5	8	0	0	8	
=ES+P21-XT212		5	8	0	0	8	
=ES+S-X1	load circuit	1	359	95	33	359	
=ES+S-X1.1		1	120	0	0	120	
=ES+S-X2	switch box door	901	907	0	0	7	
=ES+S-X3	terminal strip X3	401	441-	0	0	123	
=ES+S-X4	terminal strip X4	501	536-	0	0	72	
=ES+S-X5	terminal strip X5	701	1004	0	0	304	
=ES+S-X11		1001	1230	57	0	230	
=ES+S-X21		2001	2238	57	0	238	
=ES+S-X31		3001	3226	56	0	226	
=ES+S-XA1		1	PE	0	0	12	
=ES+S-XA2		7	PE	0	0	26	
=ES+S-XB1		1	10	0	0	12	
=ES+S-XB2		7	10	0	0	26	
=ES+S-XC		1	PE	0	0	34	
=ES+S-XD		1	10	0	0	34	
=ES+S-XE		1	PE	0	0	34	
=ES+S-XE100		1	16	0	0	16	
=ES+S-XF		1	10	0	0	34	
=ES+S-XG		1	PE	0	0	34	
=ES+S-XH		1	10	0	0	34	
=ES+S-XKK1		277	279	1	1	3	
=ES+S-XKK2		1	12	0	0	12	
=ES+S-XKO1		274	276	0	0	3	
=ES+S-XKR		1	378	0	0	378	
=ES+S-XN5		785	788	0	0	4	
=ES+S-XPE		PE1	PE45	45	0	45	
=ES+S-XR		1	378	0	0	378	
=ES+S-XT230		1	5	1	0	5	
=ES+S-XT230.2		1	5	1	0	5	
=ES+S-XTSA2		1	3	0	0	3	
=ES+S-XTSA3		1	3	0	0	3	
=ES+S-XTSA4		1	3	0	0	3	
=ES+E-XBM1.1		1	6	0	0	6	
=ES+E-XBM1.2		1	6	0	0	6	
=ES+E-XBM1.3		1	6	0	0	6	
=ES+E-XBM1.4		1	6	0	0	6	

Terminal-strip overview

Klemmenleistenübersicht_SAP_001

Terminal strip	Terminal strip definition text	Terminals					Graphical page of terminal diagrams
		first	last	Total PE	Total N	Total number	
=ES+E-XBM1.5		1	6	0	0	6	
=ES+E-XBM1.6		1	6	0	0	6	
=ES+E-XBM1.7		1	6	0	0	6	
=ES+E-XBM1.8		1	6	0	0	6	
=ES+E-XBM1.9		1	6	0	0	6	
=ES+E-XBM1.10		1	6	0	0	6	
=ES+E-XBM1.11		1	6	0	0	6	
=ES+E-XBM1.12		1	6	0	0	6	
=ES+E-XBM1.13		1	6	0	0	6	
=ES+E-XBM1.14		1	6	0	0	6	
=ES+E-XBM1.15		1	6	0	0	6	
=ES+E-XBM1.16		1	6	0	0	6	
=ES+E-XBM1.17		1	6	0	0	6	
=ES+E-XBM1.18		1	6	0	0	6	
=ES+E-XBM1.19		1	6	0	0	6	
=ES+E-XBM1.20		1	6	0	0	6	
=ES+E-XBM1.21		1	6	0	0	6	
=ES+E-XBM1.22		1	6	0	0	6	
=ES+E-XBM1.23		1	6	0	0	6	
=ES+E-XBM1.24		1	6	0	0	6	
=ES+E-XBM1.25		1	6	0	0	6	
=ES+E-XBM1.26		1	6	0	0	6	
=ES+E-XBM1.27		1	6	0	0	6	
=ES+E-XBM1.28		1	6	0	0	6	
=ES+E-XBM1.29		1	6	0	0	6	
=ES+E-XBM1.30		1	6	0	0	6	
=ES+E-XBM1.31		1	6	0	0	6	
=ES+E-XBM1.32		1	6	0	0	6	
=ES+E-XBM1.33		1	6	0	0	6	
=ES+E-XBM1.34		1	6	0	0	6	
=ES+E-XBM1.35		1	6	0	0	6	
=ES+E-XBM1.36		1	6	0	0	6	
=ES+E-XBM1.37		1	6	0	0	6	
=ES+E-XBM1.38		1	6	0	0	6	
=ES+E-XBM1.39		1	6	0	0	6	
=ES+E-XBM1.40		1	6	0	0	6	
=ES+E-XBM1.41		1	6	0	0	6	
=ES+E-XBM1.42		1	6	0	0	6	

Terminal-strip overview

Klemmenleistenübersicht_SAP_001

Terminal strip	Terminal strip definition text	Terminals					Graphical page of terminal diagrams
		first	last	Total PE	Total N	Total number	
=ES+E-XBM1.43		1	6	0	0	6	
=ES+E-XBM1.44		1	6	0	0	6	
=ES+E-XBM1.45		1	6	0	0	6	
=ES+E-XBM1.46		1	6	0	0	6	
=ES+E-XBM1.47		1	6	0	0	6	
=ES+E-XBM1.48		1	6	0	0	6	
=ES+E-XBM1.49		1	6	0	0	6	
=ES+E-XBM1.50		1	6	0	0	6	
=ES+E-XBM1.51		1	6	0	0	6	
=ES+E-XBM1.52		1	6	0	0	6	
=ES+E-XBM1.53		1	6	0	0	6	
=ES+E-XBM1.54		1	6	0	0	6	
=ES+E-XBM1.55		1	6	0	0	6	
=ES+E-XBM1.56		1	6	0	0	6	
=ES+E-XBM1.57		1	6	0	0	6	
=ES+E-XBM1.58		1	6	0	0	6	
=ES+E-XBM1.59		1	6	0	0	6	
=ES+E-XBM1.60		1	6	0	0	6	
=ES+E-XBM1.61		1	6	0	0	6	
=ES+E-XBM1.62		1	6	0	0	6	
=ES+E-XBM1.63		1	6	0	0	6	
=ES+E-XBM1.64		1	6	0	0	6	
=ES+E-XBM1.65		1	6	0	0	6	
=ES+E-XBM1.66		1	6	0	0	6	
=ES+E-XBM1.67		1	6	0	0	6	
=ES+E-XBM1.68		1	6	0	0	6	
=ES+E-XBM1.69		1	6	0	0	6	
=ES+E-XBM1.70		1	6	0	0	6	
=ES+E-XBM1.71		1	6	0	0	6	
=ES+E-XBM1.72		1	6	0	0	6	
=ES+E-XBM1.73		1	6	0	0	6	
=ES+E-XBM1.74		1	6	0	0	6	
=ES+E-XBM1.75		1	6	0	0	6	
=ES+E-XBM1.76		1	6	0	0	6	
=ES+E-XBM1.77		1	6	0	0	6	
=ES+E-XBM1.78		1	6	0	0	6	
=ES+E-XBM1.79		1	6	0	0	6	
=ES+E-XBM1.80		1	6	0	0	6	

Terminal-strip overview

Klemmenleistenübersicht_SAP_001

Terminal strip	Terminal strip definition text	Terminals					Graphical page of terminal diagrams
		first	last	Total PE	Total N	Total number	
=ES+E-XBM1.81		1	6	0	0	6	
=ES+E-XBM1.82		1	6	0	0	6	
=ES+E-XBM1.83		1	6	0	0	6	
=ES+E-XBM1.84		1	6	0	0	6	
=ES+E-XBM1.85		1	6	0	0	6	
=ES+E-XBM1.86		1	6	0	0	6	
=ES+E-XBM1.87		1	6	0	0	6	
=ES+E-XBM1.88		1	6	0	0	6	
=ES+E-XBM1.89		1	6	0	0	6	
=ES+E-XBM1.90		1	6	0	0	6	
=ES+E-XBM1.91		1	6	0	0	6	
=ES+E-XBM1.92		1	6	0	0	6	
=ES+E-XBM1.93		1	6	0	0	6	
=ES+E-XBM1.95		1	6	0	0	6	
=ES+E-XBM1.97		1	6	0	0	6	
=ES+E-XBM1.99		1	6	0	0	6	
=ES+E-XBM1.101		1	6	0	0	6	
=ES+E-XBM1.102		1	6	0	0	6	
=ES+E-XBM2.1		1	6	0	0	6	
=ES+E-XBM2.2		1	6	0	0	6	
=ES+E-XBM2.3		1	6	0	0	6	
=ES+E-XBM2.4		1	6	0	0	6	
=ES+E-XBM2.5		1	6	0	0	6	
=ES+E-XBM2.6		1	6	0	0	6	
=ES+E-XBM2.7		1	6	0	0	6	
=ES+E-XBM2.8		1	6	0	0	6	
=ES+E-XBM2.9		1	6	0	0	6	
=ES+E-XBM2.10		1	6	0	0	6	
=ES+E-XBM2.11		1	6	0	0	6	
=ES+E-XBM2.12		1	6	0	0	6	
=ES+E-XBM2.13		1	6	0	0	6	
=ES+E-XBM2.14		1	6	0	0	6	
=ES+E-XBM2.15		1	6	0	0	6	
=ES+E-XBM2.16		1	6	0	0	6	
=ES+E-XBM2.17		1	6	0	0	6	
=ES+E-XBM2.18		1	6	0	0	6	
=ES+E-XBM2.19		1	6	0	0	6	
=ES+E-XBM2.20		1	6	0	0	6	

Terminal-strip overview

Klemmenleistenübersicht_SAP_001

Terminal strip	Terminal strip definition text	Terminals					Graphical page of terminal diagrams
		first	last	Total PE	Total N	Total number	
=ES+E-XBM2.21		1	6	0	0	6	
=ES+E-XBM2.22		1	6	0	0	6	
=ES+E-XBM2.23		1	6	0	0	6	
=ES+E-XBM2.24		1	6	0	0	6	
=ES+E-XBM2.25		1	6	0	0	6	
=ES+E-XBM2.26		1	6	0	0	6	
=ES+E-XBM2.27		1	6	0	0	6	
=ES+E-XBM2.28		1	6	0	0	6	
=ES+E-XBM2.29		1	6	0	0	6	
=ES+E-XBM2.30		1	6	0	0	6	
=ES+E-XBM2.31		1	6	0	0	6	
=ES+E-XBM2.32		1	6	0	0	6	
=ES+E-XBM2.33		1	6	0	0	6	
=ES+E-XBM2.34		1	6	0	0	6	
=ES+E-XBM2.35		1	6	0	0	6	
=ES+E-XBM2.36		1	6	0	0	6	
=ES+E-XBM2.37		1	6	0	0	6	
=ES+E-XBM2.38		1	6	0	0	6	
=ES+E-XBM2.39		1	6	0	0	6	
=ES+E-XBM2.40		1	6	0	0	6	
=ES+E-XBM2.41		1	6	0	0	6	
=ES+E-XBM2.42		1	6	0	0	6	
=ES+E-XBM2.43		1	6	0	0	6	
=ES+E-XBM2.44		1	6	0	0	6	
=ES+E-XBM2.45		1	6	0	0	6	
=ES+E-XBM2.46		1	6	0	0	6	
=ES+E-XBM2.47		1	6	0	0	6	
=ES+E-XBM2.48		1	6	0	0	6	
=ES+E-XBM2.49		1	6	0	0	6	
=ES+E-XBM2.50		1	6	0	0	6	
=ES+E-XBM2.51		1	6	0	0	6	
=ES+E-XBM2.52		1	6	0	0	6	
=ES+E-XBM2.53		1	6	0	0	6	
=ES+E-XBM2.54		1	6	0	0	6	
=ES+E-XBM2.55		1	6	0	0	6	
=ES+E-XBM2.56		1	6	0	0	6	
=ES+E-XBM2.57		1	6	0	0	6	
=ES+E-XBM2.58		1	6	0	0	6	

Terminal-strip overview

Klemmenleistenübersicht_SAP_001

Terminal strip	Terminal strip definition text	Terminals					Graphical page of terminal diagrams
		first	last	Total PE	Total N	Total number	
=ES+E-XBM2.59		1	6	0	0	6	
=ES+E-XBM2.60		1	6	0	0	6	
=ES+E-XBM2.61		1	6	0	0	6	
=ES+E-XBM2.62		1	6	0	0	6	
=ES+E-XBM2.63		1	6	0	0	6	
=ES+E-XK9.1		1	6	0	0	6	
=ES+E-XK10.1		1	6	0	0	6	
=ES+E-XK11.1		1	6	0	0	6	
=ES+E-XK12.1		1	6	0	0	6	
=ES+E-XK13.1		1	6	0	0	6	
=ES+E-XK14.1		1	6	0	0	6	
=ES+E-XK15.1		1	6	0	0	6	
=ES+E-XK16.1		1	6	0	0	6	
=ES+E-XK26		503	507-	0	0	10	

Cable overview

F10_001

Cable name	Source (from)	Target (to)	Cable type	all conductors	Conductors used	Cross-section [mm]	Length [m]	Remark	Graphical page of cable diagram
=ES+S-W9215	=ES+P21-XT212	=ES+S-XE100			4				
=ES+S-W9216	=ES+P21-XT212	=ES+S-XE100			4				
=ES+S-W9217	=ER3+H09-X10	=ES+S-XE100			4				
=ES+S-W9218	=ER3+H09-X10	=ES+S-XE100			4				
=ES+E-WA32.2	=ES+S-X1	=ES+E-A32.2	Ölflex Classic 110	12	11	1,0			
=ES+E-WAH1	=ES+S-X5	=ES+E-AH1	Ölflex Classic 110	3	2	1,0			
=ES+E-WB9	=ES+S-X5	=ES+E-B9	Ölflex Classic 110	5	4	1,0			
=ES+E-WB10	=ES+S-X5	=ES+E-B10	Ölflex Classic 110	5	4	1,0			
=ES+E-WB11	=ES+S-X5	=ES+E-B11	Ölflex Classic 110	5	4	1,0			
=ES+E-WB12	=ES+S-X5	=ES+E-B12	Ölflex Classic 110	5	4	1,0			
=ES+E-WB13	=ES+S-X5	=ES+E-B13	Ölflex Classic 110	5	4	1,0			
=ES+E-WB14	=ES+S-X5	=ES+E-B14	Ölflex Classic 110	5	4	1,0			
=ES+E-WB15	=ES+S-X5	=ES+E-B15	Ölflex Classic 110	5	4	1,0			
=ES+E-WB16	=ES+S-X5	=ES+E-B16	Ölflex Classic 110	5	4	1,0			
=ES+E-WBE336	=ES+E-XBE336	=ES+E-BE336	Unitronic Li2YCY (TP)	8	5	0,34			
=ES+E-WBE338	=ES+S-X3	=ES+E-BE338	Unitronic Li2YCY (TP)	8	5	0,34			
=ES+E-WBE400	=ES+E-XBE400	=ES+E-BE400	Unitronic Li2YCY (TP)	8	5	0,34			
=ES+E-WBM1.1	=ES+E-XBM1.1	=ES+E-BM1.1			6				
=ES+E-WBM1.2	=ES+E-XBM1.2	=ES+E-BM1.2			6				
=ES+E-WBM1.3	=ES+E-XBM1.3	=ES+E-BM1.3			6				
=ES+E-WBM1.4	=ES+E-XBM1.4	=ES+E-BM1.4			6				
=ES+E-WBM1.5	=ES+E-XBM1.5	=ES+E-BM1.5			6				
=ES+E-WBM1.6	=ES+E-XBM1.6	=ES+E-BM1.6			6				
=ES+E-WBM1.7	=ES+E-XBM1.7	=ES+E-BM1.7			6				
=ES+E-WBM1.8	=ES+E-XBM1.8	=ES+E-BM1.8			6				
=ES+E-WBM1.9	=ES+E-XBM1.9	=ES+E-BM1.9			14				
=ES+E-WBM1.10	=ES+E-XBM1.10	=ES+E-BM1.10			14				
=ES+E-WBM1.11	=ES+E-XBM1.11	=ES+E-BM1.11			14				
=ES+E-WBM1.12	=ES+E-XBM1.12	=ES+E-BM1.12			14				
=ES+E-WBM1.13	=ES+E-XBM1.13	=ES+E-BM1.13			14				
=ES+E-WBM1.14	=ES+E-XBM1.14	=ES+E-BM1.14			14				
=ES+E-WBM1.15	=ES+E-XBM1.15	=ES+E-BM1.15			14				
=ES+E-WBM1.16	=ES+E-XBM1.16	=ES+E-BM1.16			14				
=ES+E-WBM1.17	=ES+E-XBM1.17	=ES+E-BM1.17			14				
=ES+E-WBM1.18	=ES+E-XBM1.18	=ES+E-BM1.18			14				
=ES+E-WBM1.19	=ES+E-XBM1.19	=ES+E-BM1.19			14				
=ES+E-WBM1.20	=ES+E-XBM1.20	=ES+E-BM1.20			14				
=ES+E-WBM1.21	=ES+E-XBM1.21	=ES+E-BM1.21			14				
=ES+E-WBM1.22	=ES+E-XBM1.22	=ES+E-BM1.22			14				
=ES+E-WBM1.23	=ES+E-XBM1.23	=ES+E-BM1.23			14				
=ES+E-WBM1.24	=ES+E-XBM1.24	=ES+E-BM1.24			14				
=ES+E-WBM1.25	=ES+E-XBM1.25	=ES+E-BM1.25			14				
=ES+E-WBM1.26	=ES+E-XBM1.26	=ES+E-BM1.26			14				
=ES+E-WBM1.27	=ES+E-XBM1.27	=ES+E-BM1.27			14				
=ES+E-WBM1.28	=ES+E-XBM1.28	=ES+E-BM1.28			14				
=ES+E-WBM1.29	=ES+E-XBM1.29	=ES+E-BM1.29			14				

Cable overview

F10_001

Cable name	Source (from)	Target (to)	Cable type	all conductors	Conductors used	Cross-section [mm]	Length [m]	Remark	Graphical page of cable diagram
=ES+E-WBM1.30	=ES+E-XBM1.30	=ES+E-BM1.30			14				
=ES+E-WBM1.31	=ES+E-XBM1.31	=ES+E-BM1.31			14				
=ES+E-WBM1.32	=ES+E-XBM1.32	=ES+E-BM1.32			14				
=ES+E-WBM1.33	=ES+E-XBM1.33	=ES+E-BM1.33			14				
=ES+E-WBM1.34	=ES+E-XBM1.34	=ES+E-BM1.34			14				
=ES+E-WBM1.35	=ES+E-XBM1.35	=ES+E-BM1.35			14				
=ES+E-WBM1.36	=ES+E-XBM1.36	=ES+E-BM1.36			14				
=ES+E-WBM1.37	=ES+E-XBM1.37	=ES+E-BM1.37			14				
=ES+E-WBM1.38	=ES+E-XBM1.38	=ES+E-BM1.38			14				
=ES+E-WBM1.39	=ES+E-XBM1.39	=ES+E-BM1.39			14				
=ES+E-WBM1.40	=ES+E-XBM1.40	=ES+E-BM1.40			14				
=ES+E-WBM1.41	=ES+E-XBM1.41	=ES+E-BM1.41			14				
=ES+E-WBM1.42	=ES+E-XBM1.42	=ES+E-BM1.42			14				
=ES+E-WBM1.43	=ES+E-XBM1.43	=ES+E-BM1.43			14				
=ES+E-WBM1.44	=ES+E-XBM1.44	=ES+E-BM1.44			14				
=ES+E-WBM1.45	=ES+E-XBM1.45	=ES+E-BM1.45			14				
=ES+E-WBM1.46	=ES+E-XBM1.46	=ES+E-BM1.46			14				
=ES+E-WBM1.47	=ES+E-XBM1.47	=ES+E-BM1.47			14				
=ES+E-WBM1.48	=ES+E-XBM1.48	=ES+E-BM1.48			14				
=ES+E-WBM1.49	=ES+E-XBM1.49	=ES+E-BM1.49			14				
=ES+E-WBM1.50	=ES+E-XBM1.50	=ES+E-BM1.50			14				
=ES+E-WBM1.51	=ES+E-XBM1.51	=ES+E-BM1.51			14				
=ES+E-WBM1.52	=ES+E-XBM1.52	=ES+E-BM1.52			14				
=ES+E-WBM1.53	=ES+E-XBM1.53	=ES+E-BM1.53			14				
=ES+E-WBM1.54	=ES+E-XBM1.54	=ES+E-BM1.54			14				
=ES+E-WBM1.55	=ES+E-XBM1.55	=ES+E-BM1.55			14				
=ES+E-WBM1.56	=ES+E-XBM1.56	=ES+E-BM1.56			14				
=ES+E-WBM1.57	=ES+E-XBM1.57	=ES+E-BM1.57			14				
=ES+E-WBM1.58	=ES+E-XBM1.58	=ES+E-BM1.58			14				
=ES+E-WBM1.59	=ES+E-XBM1.59	=ES+E-BM1.59			14				
=ES+E-WBM1.60	=ES+E-XBM1.60	=ES+E-BM1.60			14				
=ES+E-WBM1.61	=ES+E-XBM1.61	=ES+E-BM1.61			14				
=ES+E-WBM1.62	=ES+E-XBM1.62	=ES+E-BM1.62			14				
=ES+E-WBM1.63	=ES+E-XBM1.63	=ES+E-BM1.63			14				
=ES+E-WBM1.64	=ES+E-XBM1.64	=ES+E-BM1.64			6				
=ES+E-WBM1.65	=ES+E-XBM1.65	=ES+E-BM1.65			6				
=ES+E-WBM1.66	=ES+E-XBM1.66	=ES+E-BM1.66			6				
=ES+E-WBM1.67	=ES+E-XBM1.67	=ES+E-BM1.67			6				
=ES+E-WBM1.68	=ES+E-XBM1.68	=ES+E-BM1.68			6				
=ES+E-WBM1.69	=ES+E-XBM1.69	=ES+E-BM1.69			6				
=ES+E-WBM1.70	=ES+E-XBM1.70	=ES+E-BM1.70			6				
=ES+E-WBM1.71	=ES+E-XBM1.71	=ES+E-BM1.71			6				
=ES+E-WBM1.72	=ES+E-XBM1.72	=ES+E-BM1.72			6				
=ES+E-WBM1.73	=ES+E-XBM1.73	=ES+E-BM1.73			6				
=ES+E-WBM1.74	=ES+E-XBM1.74	=ES+E-BM1.74			6				
=ES+E-WBM1.75	=ES+E-XBM1.75	=ES+E-BM1.75			6				

Cable overview

F10_001

Cable name	Source (from)	Target (to)	Cable type	all conductors	Conductors used	Cross-section [mm]	Length [m]	Remark	Graphical page of cable diagram
=ES+E-WBM1.76	=ES+E-XBM1.76	=ES+E-BM1.76			6				
=ES+E-WBM1.77	=ES+E-XBM1.77	=ES+E-BM1.77			6				
=ES+E-WBM1.78	=ES+E-XBM1.78	=ES+E-BM1.78			6				
=ES+E-WBM1.79	=ES+E-XBM1.79	=ES+E-BM1.79			6				
=ES+E-WBM1.80	=ES+E-XBM1.80	=ES+E-BM1.80			6				
=ES+E-WBM1.81	=ES+E-XBM1.81	=ES+E-BM1.81			6				
=ES+E-WBM1.82	=ES+E-XBM1.82	=ES+E-BM1.82			6				
=ES+E-WBM1.83	=ES+E-XBM1.83	=ES+E-BM1.83			6				
=ES+E-WBM1.84	=ES+E-XBM1.84	=ES+E-BM1.84			6				
=ES+E-WBM1.85	=ES+E-XBM1.85	=ES+E-BM1.85			6				
=ES+E-WBM1.86	=ES+E-XBM1.86	=ES+E-BM1.86			6				
=ES+E-WBM1.87	=ES+E-XBM1.87	=ES+E-BM1.87			6				
=ES+E-WBM1.88	=ES+E-XBM1.88	=ES+E-BM1.88			6				
=ES+E-WBM1.89	=ES+E-XBM1.89	=ES+E-BM1.89			6				
=ES+E-WBM1.90	=ES+E-XBM1.90	=ES+E-BM1.90			6				
=ES+E-WBM1.91	=ES+E-XBM1.91	=ES+E-BM1.91			6				
=ES+E-WBM1.92	=ES+E-XBM1.92	=ES+E-BM1.92			6				
=ES+E-WBM1.93	=ES+E-XBM1.93	=ES+E-BM1.93			6				
=ES+E-WBM1.95	=ES+E-XBM1.95	=ES+E-BM1.95			6				
=ES+E-WBM1.97	=ES+E-XBM1.97	=ES+E-BM1.97			6				
=ES+E-WBM1.99	=ES+E-XBM1.99	=ES+E-BM1.99			6				
=ES+E-WBM1.101	=ES+E-XBM1.101	=ES+E-BM1.101			6				
=ES+E-WBM1.102	=ES+E-XBM1.102	=ES+E-BM1.102			6				
=ES+E-WBM2.1	=ES+E-XBM2.1	=ES+E-BM2.1			6				
=ES+E-WBM2.2	=ES+E-XBM2.2	=ES+E-BM2.2			6				
=ES+E-WBM2.3	=ES+E-XBM2.3	=ES+E-BM2.3			6				
=ES+E-WBM2.4	=ES+E-XBM2.4	=ES+E-BM2.4			6				
=ES+E-WBM2.5	=ES+E-XBM2.5	=ES+E-BM2.5			6				
=ES+E-WBM2.6	=ES+E-XBM2.6	=ES+E-BM2.6			6				
=ES+E-WBM2.7	=ES+E-XBM2.7	=ES+E-BM2.7			6				
=ES+E-WBM2.8	=ES+E-XBM2.8	=ES+E-BM2.8			6				
=ES+E-WBM2.9	=ES+E-XBM2.9	=ES+E-BM2.9			6				
=ES+E-WBM2.10	=ES+E-XBM2.10	=ES+E-BM2.10			6				
=ES+E-WBM2.11	=ES+E-XBM2.11	=ES+E-BM2.11			6				
=ES+E-WBM2.12	=ES+E-XBM2.12	=ES+E-BM2.12			6				
=ES+E-WBM2.13	=ES+E-XBM2.13	=ES+E-BM2.13			6				
=ES+E-WBM2.14	=ES+E-XBM2.14	=ES+E-BM2.14			6				
=ES+E-WBM2.15	=ES+E-XBM2.15	=ES+E-BM2.15			6				
=ES+E-WBM2.16	=ES+E-XBM2.16	=ES+E-BM2.16			6				
=ES+E-WBM2.17	=ES+E-XBM2.17	=ES+E-BM2.17			6				
=ES+E-WBM2.18	=ES+E-XBM2.18	=ES+E-BM2.18			6				
=ES+E-WBM2.19	=ES+E-XBM2.19	=ES+E-BM2.19			6				
=ES+E-WBM2.20	=ES+E-XBM2.20	=ES+E-BM2.20			6				
=ES+E-WBM2.21	=ES+E-XBM2.21	=ES+E-BM2.21			6				
=ES+E-WBM2.22	=ES+E-XBM2.22	=ES+E-BM2.22			6				
=ES+E-WBM2.23	=ES+E-XBM2.23	=ES+E-BM2.23			6				

Cable overview

F10_001

Cable name	Source (from)	Target (to)	Cable type	all conductors	Conductors used	Cross-section [mm]	Length [m]	Remark	Graphical page of cable diagram
=ES+E-WBM2.24	=ES+E-XBM2.24	=ES+E-BM2.24			6				
=ES+E-WBM2.25	=ES+E-XBM2.25	=ES+E-BM2.25			6				
=ES+E-WBM2.26	=ES+E-XBM2.26	=ES+E-BM2.26			6				
=ES+E-WBM2.27	=ES+E-XBM2.27	=ES+E-BM2.27			6				
=ES+E-WBM2.28	=ES+E-XBM2.28	=ES+E-BM2.28			6				
=ES+E-WBM2.29	=ES+E-XBM2.29	=ES+E-BM2.29			6				
=ES+E-WBM2.30	=ES+E-XBM2.30	=ES+E-BM2.30			6				
=ES+E-WBM2.31	=ES+E-XBM2.31	=ES+E-BM2.31			6				
=ES+E-WBM2.32	=ES+E-XBM2.32	=ES+E-BM2.32			6				
=ES+E-WBM2.33	=ES+E-XBM2.33	=ES+E-BM2.33			6				
=ES+E-WBM2.34	=ES+E-XBM2.34	=ES+E-BM2.34			6				
=ES+E-WBM2.35	=ES+E-XBM2.35	=ES+E-BM2.35			6				
=ES+E-WBM2.36	=ES+E-XBM2.36	=ES+E-BM2.36			6				
=ES+E-WBM2.37	=ES+E-XBM2.37	=ES+E-BM2.37			6				
=ES+E-WBM2.38	=ES+E-XBM2.38	=ES+E-BM2.38			6				
=ES+E-WBM2.39	=ES+E-XBM2.39	=ES+E-BM2.39			6				
=ES+E-WBM2.40	=ES+E-XBM2.40	=ES+E-BM2.40			6				
=ES+E-WBM2.41	=ES+E-XBM2.41	=ES+E-BM2.41			6				
=ES+E-WBM2.42	=ES+E-XBM2.42	=ES+E-BM2.42			6				
=ES+E-WBM2.43	=ES+E-XBM2.43	=ES+E-BM2.43			6				
=ES+E-WBM2.44	=ES+E-XBM2.44	=ES+E-BM2.44			6				
=ES+E-WBM2.45	=ES+E-XBM2.45	=ES+E-BM2.45			6				
=ES+E-WBM2.46	=ES+E-XBM2.46	=ES+E-BM2.46			6				
=ES+E-WBM2.47	=ES+E-XBM2.47	=ES+E-BM2.47			6				
=ES+E-WBM2.48	=ES+E-XBM2.48	=ES+E-BM2.48			6				
=ES+E-WBM2.49	=ES+E-XBM2.49	=ES+E-BM2.49			6				
=ES+E-WBM2.50	=ES+E-XBM2.50	=ES+E-BM2.50			6				
=ES+E-WBM2.51	=ES+E-XBM2.51	=ES+E-BM2.51			6				
=ES+E-WBM2.52	=ES+E-XBM2.52	=ES+E-BM2.52			6				
=ES+E-WBM2.53	=ES+E-XBM2.53	=ES+E-BM2.53			6				
=ES+E-WBM2.54	=ES+E-XBM2.54	=ES+E-BM2.54			6				
=ES+E-WBM2.55	=ES+E-XBM2.55	=ES+E-BM2.55			6				
=ES+E-WBM2.56	=ES+E-XBM2.56	=ES+E-BM2.56			6				
=ES+E-WBM2.57	=ES+E-XBM2.57	=ES+E-BM2.57			6				
=ES+E-WBM2.58	=ES+E-XBM2.58	=ES+E-BM2.58			6				
=ES+E-WBM2.59	=ES+E-XBM2.59	=ES+E-BM2.59			6				
=ES+E-WBM2.60	=ES+E-XBM2.60	=ES+E-BM2.60			6				
=ES+E-WBM2.61	=ES+E-XBM2.61	=ES+E-BM2.61			6				
=ES+E-WBM2.62	=ES+E-XBM2.62	=ES+E-BM2.62			6				
=ES+E-WBM2.63	=ES+E-XBM2.63	=ES+E-BM2.63			6				
=ES+E-WM1.1	=ES+S-T1.1	=ES+E-M1.1	Ölflex Servo FD 785 CP	4	4	1,5			
=ES+E-WM1.2	=ES+S-T1.2	=ES+E-M1.2	Ölflex Servo FD 785 CP	4	4	1,5			
=ES+E-WM1.3	=ES+S-T1.3	=ES+E-M1.3	Ölflex Servo FD 785 CP	4	4	1,5			
=ES+E-WM1.4	=ES+S-T1.4	=ES+E-M1.4	Ölflex Servo FD 785 CP	4	4	1,5			
=ES+E-WM1.5	=ES+S-T1.5	=ES+E-M1.5	Ölflex Servo FD 785 CP	4	4	1,5			
=ES+E-WM1.6	=ES+S-T1.6	=ES+E-M1.6	Ölflex Servo FD 785 CP	4	4	1,5			

Cable overview

F10_001

Cable name	Source (from)	Target (to)	Cable type	all conductors	Conductors used	Cross-section [mm]	Length [m]	Remark	Graphical page of cable diagram
=ES+E-WM1.7	=ES+S-T1.7	=ES+E-M1.7	Ölflex Servo FD 785 CP	4	4	1,5			
=ES+E-WM1.8	=ES+S-T1.8	=ES+E-M1.8	Ölflex Servo FD 785 CP	4	4	1,5			
=ES+E-WM1.9	=ES+S-T1.9	=ES+E-M1.9	Ölflex Servo FD 785 CP	4	8	1,5			
=ES+E-WM1.10	=ES+S-T1.10	=ES+E-M1.10	Ölflex Servo FD 785 CP	4	8	1,5			
=ES+E-WM1.11	=ES+S-T1.11	=ES+E-M1.11	Ölflex Servo FD 785 CP	4	8	1,5			
=ES+E-WM1.12	=ES+S-T1.12	=ES+E-M1.12	Ölflex Servo FD 785 CP	4	8	1,5			
=ES+E-WM1.13	=ES+S-T1.13	=ES+E-M1.13	Ölflex Servo FD 785 CP	4	8	1,5			
=ES+E-WM1.14	=ES+S-T1.14	=ES+E-M1.14	Ölflex Servo FD 785 CP	4	8	1,5			
=ES+E-WM1.15	=ES+S-T1.15	=ES+E-M1.15	Ölflex Servo FD 785 CP	4	8	1,5			
=ES+E-WM1.16	=ES+S-T1.16	=ES+E-M1.16	Ölflex Servo FD 785 CP	4	8	1,5			
=ES+E-WM1.17	=ES+S-T1.17	=ES+E-M1.17	Ölflex Servo FD 785 CP	4	8	1,5			
=ES+E-WM1.18	=ES+S-T1.18	=ES+E-M1.18	Ölflex Servo FD 785 CP	4	8	1,5			
=ES+E-WM1.19	=ES+S-T1.19	=ES+E-M1.19	Ölflex Servo FD 785 CP	4	8	1,5			
=ES+E-WM1.20	=ES+S-T1.20	=ES+E-M1.20	Ölflex Servo FD 785 CP	4	8	1,5			
=ES+E-WM1.21	=ES+S-T1.21	=ES+E-M1.21	Ölflex Servo FD 785 CP	4	8	1,5			
=ES+E-WM1.22	=ES+S-T1.22	=ES+E-M1.22	Ölflex Servo FD 785 CP	4	8	1,5			
=ES+E-WM1.23	=ES+S-T1.23	=ES+E-M1.23	Ölflex Servo FD 785 CP	4	8	1,5			
=ES+E-WM1.24	=ES+S-T1.24	=ES+E-M1.24	Ölflex Servo FD 785 CP	4	8	1,5			
=ES+E-WM1.25	=ES+S-T1.25	=ES+E-M1.25	Ölflex Servo FD 785 CP	4	8	1,5			
=ES+E-WM1.26	=ES+S-T1.26	=ES+E-M1.26	Ölflex Servo FD 785 CP	4	8	1,5			
=ES+E-WM1.27	=ES+S-T1.27	=ES+E-M1.27	Ölflex Servo FD 785 CP	4	8	1,5			
=ES+E-WM1.28	=ES+S-T1.28	=ES+E-M1.28	Ölflex Servo FD 785 CP	4	8	1,5			
=ES+E-WM1.29	=ES+S-T1.29	=ES+E-M1.29	Ölflex Servo FD 785 CP	4	8	1,5			
=ES+E-WM1.30	=ES+S-T1.30	=ES+E-M1.30	Ölflex Servo FD 785 CP	4	8	1,5			
=ES+E-WM1.31	=ES+S-T1.31	=ES+E-M1.31	Ölflex Servo FD 785 CP	4	8	1,5			
=ES+E-WM1.32	=ES+S-T1.32	=ES+E-M1.32	Ölflex Servo FD 785 CP	4	8	1,5			
=ES+E-WM1.33	=ES+S-T1.33	=ES+E-M1.33	Ölflex Servo FD 785 CP	4	8	1,5			
=ES+E-WM1.34	=ES+S-T1.34	=ES+E-M1.34	Ölflex Servo FD 785 CP	4	8	1,5			
=ES+E-WM1.35	=ES+S-T1.35	=ES+E-M1.35	Ölflex Servo FD 785 CP	4	8	1,5			
=ES+E-WM1.36	=ES+S-T1.36	=ES+E-M1.36	Ölflex Servo FD 785 CP	4	8	1,5			
=ES+E-WM1.37	=ES+S-T1.37	=ES+E-M1.37	Ölflex Servo FD 785 CP	4	8	1,5			
=ES+E-WM1.38	=ES+S-T1.38	=ES+E-M1.38	Ölflex Servo FD 785 CP	4	8	1,5			
=ES+E-WM1.39	=ES+S-T1.39	=ES+E-M1.39	Ölflex Servo FD 785 CP	4	8	1,5			
=ES+E-WM1.40	=ES+S-T1.40	=ES+E-M1.40	Ölflex Servo FD 785 CP	4	8	1,5			
=ES+E-WM1.41	=ES+S-T1.41	=ES+E-M1.41	Ölflex Servo FD 785 CP	4	8	1,5			
=ES+E-WM1.42	=ES+S-T1.42	=ES+E-M1.42	Ölflex Servo FD 785 CP	4	8	1,5			
=ES+E-WM1.43	=ES+S-T1.43	=ES+E-M1.43	Ölflex Servo FD 785 CP	4	8	1,5			
=ES+E-WM1.44	=ES+S-T1.44	=ES+E-M1.44	Ölflex Servo FD 785 CP	4	8	1,5			
=ES+E-WM1.45	=ES+S-T1.45	=ES+E-M1.45	Ölflex Servo FD 785 CP	4	8	1,5			
=ES+E-WM1.46	=ES+S-T1.46	=ES+E-M1.46	Ölflex Servo FD 785 CP	4	8	1,5			
=ES+E-WM1.47	=ES+S-T1.47	=ES+E-M1.47	Ölflex Servo FD 785 CP	4	8	1,5			
=ES+E-WM1.48	=ES+S-T1.48	=ES+E-M1.48	Ölflex Servo FD 785 CP	4	8	1,5			
=ES+E-WM1.49	=ES+S-T1.49	=ES+E-M1.49	Ölflex Servo FD 785 CP	4	8	1,5			
=ES+E-WM1.50	=ES+S-T1.50	=ES+E-M1.50	Ölflex Servo FD 785 CP	4	8	1,5			
=ES+E-WM1.51	=ES+S-T1.51	=ES+E-M1.51	Ölflex Servo FD 785 CP	4	8	1,5			
=ES+E-WM1.52	=ES+S-T1.52	=ES+E-M1.52	Ölflex Servo FD 785 CP	4	8	1,5			

Cable overview

F10_001

Cable name	Source (from)	Target (to)	Cable type	all conductors	Conductors used	Cross-section [mm]	Length [m]	Remark	Graphical page of cable diagram
=ES+E-WM1.53	=ES+S-T1.53	=ES+E-M1.53	Ölflex Servo FD 785 CP	4	8	1,5			
=ES+E-WM1.54	=ES+S-T1.54	=ES+E-M1.54	Ölflex Servo FD 785 CP	4	8	1,5			
=ES+E-WM1.55	=ES+S-T1.55	=ES+E-M1.55	Ölflex Servo FD 785 CP	4	8	1,5			
=ES+E-WM1.56	=ES+S-T1.56	=ES+E-M1.56	Ölflex Servo FD 785 CP	4	8	1,5			
=ES+E-WM1.57	=ES+S-T1.57	=ES+E-M1.57	Ölflex Servo FD 785 CP	4	8	1,5			
=ES+E-WM1.58	=ES+S-T1.58	=ES+E-M1.58	Ölflex Servo FD 785 CP	4	8	1,5			
=ES+E-WM1.59	=ES+S-T1.59	=ES+E-M1.59	Ölflex Servo FD 785 CP	4	8	1,5			
=ES+E-WM1.60	=ES+S-T1.60	=ES+E-M1.60	Ölflex Servo FD 785 CP	4	8	1,5			
=ES+E-WM1.61	=ES+S-T1.61	=ES+E-M1.61	Ölflex Servo FD 785 CP	4	8	1,5			
=ES+E-WM1.62	=ES+S-T1.62	=ES+E-M1.62	Ölflex Servo FD 785 CP	4	8	1,5			
=ES+E-WM1.63	=ES+S-T1.63	=ES+E-M1.63	Ölflex Servo FD 785 CP	4	8	1,5			
=ES+E-WM1.64	=ES+S-T1.64	=ES+E-M1.64	Ölflex Servo FD 785 CP	4	4	1,5			
=ES+E-WM1.65	=ES+S-T1.65	=ES+E-M1.65	Ölflex Servo FD 785 CP	4	4	1,5			
=ES+E-WM1.66	=ES+S-T1.66	=ES+E-M1.66	Ölflex Servo FD 785 CP	4	4	1,5			
=ES+E-WM1.67	=ES+S-T1.67	=ES+E-M1.67	Ölflex Servo FD 785 CP	4	4	1,5			
=ES+E-WM1.68	=ES+S-T1.68	=ES+E-M1.68	Ölflex Servo FD 785 CP	4	4	1,5			
=ES+E-WM1.69	=ES+S-T1.69	=ES+E-M1.69	Ölflex Servo FD 785 CP	4	4	1,5			
=ES+E-WM1.70	=ES+S-T1.70	=ES+E-M1.70	Ölflex Servo FD 785 CP	4	4	1,5			
=ES+E-WM1.71	=ES+S-T1.71	=ES+E-M1.71	Ölflex Servo FD 785 CP	4	4	1,5			
=ES+E-WM1.72	=ES+S-T1.72	=ES+E-M1.72	Ölflex Servo FD 785 CP	4	4	1,5			
=ES+E-WM1.73	=ES+S-T1.73	=ES+E-M1.73	Ölflex Servo FD 785 CP	4	4	1,5			
=ES+E-WM1.74	=ES+S-T1.74	=ES+E-M1.74	Ölflex Servo FD 785 CP	4	4	1,5			
=ES+E-WM1.75	=ES+S-T1.75	=ES+E-M1.75	Ölflex Servo FD 785 CP	4	4	1,5			
=ES+E-WM1.76	=ES+S-T1.76	=ES+E-M1.76	Ölflex Servo FD 785 CP	4	4	1,5			
=ES+E-WM1.77	=ES+S-T1.77	=ES+E-M1.77	Ölflex Servo FD 785 CP	4	4	1,5			
=ES+E-WM1.78	=ES+S-T1.78	=ES+E-M1.78	Ölflex Servo FD 785 CP	4	4	1,5			
=ES+E-WM1.79	=ES+S-T1.79	=ES+E-M1.79	Ölflex Servo FD 785 CP	4	4	1,5			
=ES+E-WM1.80	=ES+S-T1.80	=ES+E-M1.80	Ölflex Servo FD 785 CP	4	4	1,5			
=ES+E-WM1.81	=ES+S-T1.81	=ES+E-M1.81	Ölflex Servo FD 785 CP	4	4	1,5			
=ES+E-WM1.82	=ES+S-T1.82	=ES+E-M1.82	Ölflex Servo FD 785 CP	4	4	1,5			
=ES+E-WM1.83	=ES+S-T1.83	=ES+E-M1.83	Ölflex Servo FD 785 CP	4	4	1,5			
=ES+E-WM1.84	=ES+S-T1.84	=ES+E-M1.84	Ölflex Servo FD 785 CP	4	4	1,5			
=ES+E-WM1.85	=ES+S-T1.85	=ES+E-M1.85	Ölflex Servo FD 785 CP	4	4	1,5			
=ES+E-WM1.86	=ES+S-T1.86	=ES+E-M1.86	Ölflex Servo FD 785 CP	4	4	1,5			
=ES+E-WM1.87	=ES+S-T1.87	=ES+E-M1.87	Ölflex Servo FD 785 CP	4	4	1,5			
=ES+E-WM1.88	=ES+S-T1.88	=ES+E-M1.88	Ölflex Servo FD 785 CP	4	4	1,5			
=ES+E-WM1.89	=ES+S-T1.89	=ES+E-M1.89	Ölflex Servo FD 785 CP	4	4	1,5			
=ES+E-WM1.90	=ES+S-T1.90	=ES+E-M1.90	Ölflex Servo FD 785 CP	4	4	1,5			
=ES+E-WM1.91	=ES+S-T1.91	=ES+E-M1.91	Ölflex Servo FD 785 CP	4	4	1,5			
=ES+E-WM1.92	=ES+S-T1.92	=ES+E-M1.92	Ölflex Servo FD 785 CP	4	4	1,5			
=ES+E-WM1.93	=ES+S-T1.93	=ES+E-M1.93	Ölflex Servo FD 785 CP	4	4	1,5			
=ES+E-WM1.95	=ES+S-T1.95	=ES+E-M1.95	Ölflex Servo FD 785 CP	4	4	1,5			
=ES+E-WM1.97	=ES+S-T1.97	=ES+E-M1.97	Ölflex Servo FD 785 CP	4	4	1,5			
=ES+E-WM1.99	=ES+S-T1.99	=ES+E-M1.99	Ölflex Servo FD 785 CP	4	4	1,5			
=ES+E-WM1.101	=ES+S-T1.101	=ES+E-M1.101	Ölflex Servo FD 785 CP	4	4	2,5			
=ES+E-WM1.102	=ES+S-T1.102	=ES+E-M1.102	Ölflex Servo FD 785 CP	4	4	2,5			

Cable overview

F10_001

Cable name	Source (from)	Target (to)	Cable type	all conductors	Conductors used	Cross-section [mm]	Length [m]	Remark	Graphical page of cable diagram
=ES+E-WM2.1	=ES+S-T2.1	=ES+E-M2.1	Ölflex Servo FD 785 CP	4	4	1,5			
=ES+E-WM2.2	=ES+S-T2.2	=ES+E-M2.2	Ölflex Servo FD 785 CP	4	4	1,5			
=ES+E-WM2.3	=ES+S-T2.3	=ES+E-M2.3	Ölflex Servo FD 785 CP	4	4	1,5			
=ES+E-WM2.4	=ES+S-T2.4	=ES+E-M2.4	Ölflex Servo FD 785 CP	4	4	1,5			
=ES+E-WM2.5	=ES+S-T2.5	=ES+E-M2.5	Ölflex Servo FD 785 CP	4	4	1,5			
=ES+E-WM2.6	=ES+S-T2.6	=ES+E-M2.6	Ölflex Servo FD 785 CP	4	4	1,5			
=ES+E-WM2.7	=ES+S-T2.7	=ES+E-M2.7	Ölflex Servo FD 785 CP	4	4	1,5			
=ES+E-WM2.8	=ES+S-T2.8	=ES+E-M2.8	Ölflex Servo FD 785 CP	4	4	1,5			
=ES+E-WM2.9	=ES+S-T2.9	=ES+E-M2.9	Ölflex Servo FD 785 CP	4	4	1,5			
=ES+E-WM2.10	=ES+S-T2.10	=ES+E-M2.10	Ölflex Servo FD 785 CP	4	4	1,5			
=ES+E-WM2.11	=ES+S-T2.11	=ES+E-M2.11	Ölflex Servo FD 785 CP	4	4	1,5			
=ES+E-WM2.12	=ES+S-T2.12	=ES+E-M2.12	Ölflex Servo FD 785 CP	4	4	1,5			
=ES+E-WM2.13	=ES+S-T2.13	=ES+E-M2.13	Ölflex Servo FD 785 CP	4	4	1,5			
=ES+E-WM2.14	=ES+S-T2.14	=ES+E-M2.14	Ölflex Servo FD 785 CP	4	4	1,5			
=ES+E-WM2.15	=ES+S-T2.15	=ES+E-M2.15	Ölflex Servo FD 785 CP	4	4	1,5			
=ES+E-WM2.16	=ES+S-T2.16	=ES+E-M2.16	Ölflex Servo FD 785 CP	4	4	1,5			
=ES+E-WM2.17	=ES+S-T2.17	=ES+E-M2.17	Ölflex Servo FD 785 CP	4	4	1,5			
=ES+E-WM2.18	=ES+S-T2.18	=ES+E-M2.18	Ölflex Servo FD 785 CP	4	4	1,5			
=ES+E-WM2.19	=ES+S-T2.19	=ES+E-M2.19	Ölflex Servo FD 785 CP	4	4	1,5			
=ES+E-WM2.20	=ES+S-T2.20	=ES+E-M2.20	Ölflex Servo FD 785 CP	4	4	1,5			
=ES+E-WM2.21	=ES+S-T2.21	=ES+E-M2.21	Ölflex Servo FD 785 CP	4	4	1,5			
=ES+E-WM2.22	=ES+S-T2.22	=ES+E-M2.22	Ölflex Servo FD 785 CP	4	4	1,5			
=ES+E-WM2.23	=ES+S-T2.23	=ES+E-M2.23	Ölflex Servo FD 785 CP	4	4	1,5			
=ES+E-WM2.24	=ES+S-T2.24	=ES+E-M2.24	Ölflex Servo FD 785 CP	4	4	1,5			
=ES+E-WM2.25	=ES+S-T2.25	=ES+E-M2.25	Ölflex Servo FD 785 CP	4	4	1,5			
=ES+E-WM2.26	=ES+S-T2.26	=ES+E-M2.26	Ölflex Servo FD 785 CP	4	4	1,5			
=ES+E-WM2.27	=ES+S-T2.27	=ES+E-M2.27	Ölflex Servo FD 785 CP	4	4	1,5			
=ES+E-WM2.28	=ES+S-T2.28	=ES+E-M2.28	Ölflex Servo FD 785 CP	4	4	1,5			
=ES+E-WM2.29	=ES+S-T2.29	=ES+E-M2.29	Ölflex Servo FD 785 CP	4	4	1,5			
=ES+E-WM2.30	=ES+S-T2.30	=ES+E-M2.30	Ölflex Servo FD 785 CP	4	4	1,5			
=ES+E-WM2.31	=ES+S-T2.31	=ES+E-M2.31	Ölflex Servo FD 785 CP	4	4	1,5			
=ES+E-WM2.32	=ES+S-T2.32	=ES+E-M2.32	Ölflex Servo FD 785 CP	4	4	1,5			
=ES+E-WM2.33	=ES+S-T2.33	=ES+E-M2.33	Ölflex Servo FD 785 CP	4	4	1,5			
=ES+E-WM2.34	=ES+S-T2.34	=ES+E-M2.34	Ölflex Servo FD 785 CP	4	4	1,5			
=ES+E-WM2.35	=ES+S-T2.35	=ES+E-M2.35	Ölflex Servo FD 785 CP	4	4	1,5			
=ES+E-WM2.36	=ES+S-T2.36	=ES+E-M2.36	Ölflex Servo FD 785 CP	4	4	1,5			
=ES+E-WM2.37	=ES+S-T2.37	=ES+E-M2.37	Ölflex Servo FD 785 CP	4	4	1,5			
=ES+E-WM2.38	=ES+S-T2.38	=ES+E-M2.38	Ölflex Servo FD 785 CP	4	4	1,5			
=ES+E-WM2.39	=ES+S-T2.39	=ES+E-M2.39	Ölflex Servo FD 785 CP	4	4	1,5			
=ES+E-WM2.40	=ES+S-T2.40	=ES+E-M2.40	Ölflex Servo FD 785 CP	4	4	1,5			
=ES+E-WM2.41	=ES+S-T2.41	=ES+E-M2.41	Ölflex Servo FD 785 CP	4	4	1,5			
=ES+E-WM2.42	=ES+S-T2.42	=ES+E-M2.42	Ölflex Servo FD 785 CP	4	4	1,5			
=ES+E-WM2.43	=ES+S-T2.43	=ES+E-M2.43	Ölflex Servo FD 785 CP	4	4	1,5			
=ES+E-WM2.44	=ES+S-T2.44	=ES+E-M2.44	Ölflex Servo FD 785 CP	4	4	1,5			
=ES+E-WM2.45	=ES+S-T2.45	=ES+E-M2.45	Ölflex Servo FD 785 CP	4	4	1,5			
=ES+E-WM2.46	=ES+S-T2.46	=ES+E-M2.46	Ölflex Servo FD 785 CP	4	4	1,5			

Cable overview

F10_001

Cable name	Source (from)	Target (to)	Cable type	all conductors	Conductors used	Cross-section [mm]	Length [m]	Remark	Graphical page of cable diagram
=ES+E-WM2.47	=ES+S-T2.47	=ES+E-M2.47	Ölflex Servo FD 785 CP	4	4	1,5			
=ES+E-WM2.48	=ES+S-T2.48	=ES+E-M2.48	Ölflex Servo FD 785 CP	4	4	1,5			
=ES+E-WM2.49	=ES+S-T2.49	=ES+E-M2.49	Ölflex Servo FD 785 CP	4	4	1,5			
=ES+E-WM2.50	=ES+S-T2.50	=ES+E-M2.50	Ölflex Servo FD 785 CP	4	4	1,5			
=ES+E-WM2.51	=ES+S-T2.51	=ES+E-M2.51	Ölflex Servo FD 785 CP	4	4	1,5			
=ES+E-WM2.52	=ES+S-T2.52	=ES+E-M2.52	Ölflex Servo FD 785 CP	4	4	1,5			
=ES+E-WM2.53	=ES+S-T2.53	=ES+E-M2.53	Ölflex Servo FD 785 CP	4	4	1,5			
=ES+E-WM2.54	=ES+S-T2.54	=ES+E-M2.54	Ölflex Servo FD 785 CP	4	4	1,5			
=ES+E-WM2.55	=ES+S-T2.55	=ES+E-M2.55	Ölflex Servo FD 785 CP	4	4	1,5			
=ES+E-WM2.56	=ES+S-T2.56	=ES+E-M2.56	Ölflex Servo FD 785 CP	4	4	1,5			
=ES+E-WM2.57	=ES+S-T2.57	=ES+E-M2.57	Ölflex Servo FD 785 CP	4	4	1,5			
=ES+E-WM2.58	=ES+S-T2.58	=ES+E-M2.58	Ölflex Servo FD 785 CP	4	4	1,5			
=ES+E-WM2.59	=ES+S-T2.59	=ES+E-M2.59	Ölflex Servo FD 785 CP	4	4	1,5			
=ES+E-WM2.60	=ES+S-T2.60	=ES+E-M2.60	Ölflex Servo FD 785 CP	4	4	1,5			
=ES+E-WM2.61	=ES+S-T2.61	=ES+E-M2.61	Ölflex Servo FD 785 CP	4	4	1,5			
=ES+E-WM2.62	=ES+S-T2.62	=ES+E-M2.62	Ölflex Servo FD 785 CP	4	4	1,5			
=ES+E-WM2.63	=ES+S-T2.63	=ES+E-M2.63	Ölflex Servo FD 785 CP	4	4	1,5			
=ES+E-WM3.11	=ES+S-X1	=ES+S-QEM3.1	Ölflex Classic 110	4	4	1,5			
=ES+E-WM3.12	=ES+S-QEM3.1	=ES+E-M3.1	Ölflex Classic 110	4	4	1,5			
=ES+E-WM3.21	=ES+S-X1	=ES+S-QEM3.2	Ölflex Classic 110	4	4	1,5			
=ES+E-WM3.22	=ES+S-QEM3.2	=ES+E-M3.2	Ölflex Classic 110	4	4	1,5			
=ES+E-WM3.41	=ES+S-X1	=ES+S-QEM3.4	Ölflex Classic 110	4	4	1,5			
=ES+E-WM3.42	=ES+S-QEM3.4	=ES+E-M3.4	Ölflex Classic 110	4	4	1,5			
=ES+E-WM3.51	=ES+S-X1	=ES+S-QEM3.5	Ölflex Classic 110	4	4	10			
=ES+E-WM3.52	=ES+S-QEM3.5	=ES+E-M3.5	Ölflex Classic 110	4	4	10			
=ES+E-WM4.11	=ES+S-X1	=ES+S-QEM4.1	Ölflex Classic 110	4	4	1,5			
=ES+E-WM4.12	=ES+S-QEM4.1	=ES+E-M4.1	Ölflex Classic 110	4	4	1,5			
=ES+E-WM4.21	=ES+S-X1	=ES+S-QEM4.2	Ölflex Classic 110	4	4	1,5			
=ES+E-WM4.22	=ES+S-QEM4.2	=ES+E-M4.2	Ölflex Classic 110	4	4	1,5			
=ES+E-WM4.31	=ES+S-X1	=ES+S-QEM4.3	Ölflex Classic 110	4	4	1,5			
=ES+E-WM4.32	=ES+S-QEM4.3	=ES+E-M4.3	Ölflex Classic 110	4	4	1,5			
=ES+E-WM4.41	=ES+S-X1	=ES+S-QEM4.4	Ölflex Classic 110	4	4	1,5			
=ES+E-WM4.42	=ES+S-QEM4.4	=ES+E-M4.4	Ölflex Classic 110	4	4	1,5			
=ES+E-WM7.1	=ES+S-X1	=ES+S-QEM7	Ölflex Classic 110	4	4	35			
=ES+E-WM7.2	=ES+S-QEM7	=ES+E-M7	Ölflex Classic 110	4	4	35			
=ES+E-WM7.21	=ES+S-X1	=ES+S-QEM7.2	Ölflex Classic 110	4	4	1,5			
=ES+E-WM7.22	=ES+S-QEM7.2	=ES+E-M7.2	Ölflex Classic 110	4	4	1,5			
=ES+E-WM7.41	=ES+S-X1	=ES+S-QEM7.4	Ölflex Classic 110	4	4	1,5			
=ES+E-WM7.42	=ES+S-QEM7.4	=ES+E-M7.4	Ölflex Classic 110	4	4	1,5			
=ES+E-WM8.11	=ES+S-X1	=ES+S-QEM8.1	Ölflex Classic 110	4	4	2,5			
=ES+E-WM8.12	=ES+S-QEM8.1	=ES+E-M8.1	Ölflex Classic 110	4	4	2,5			
=ES+E-WM8.21	=ES+S-X1	=ES+S-QEM8.2	Ölflex Classic 110	4	4	2,5			
=ES+E-WM8.22	=ES+S-QEM8.2	=ES+E-M8.2	Ölflex Classic 110	4	4	2,5			
=ES+E-WM8.31	=ES+S-X1	=ES+S-QEM8.3	Ölflex Classic 110	4	4	4			
=ES+E-WM8.32	=ES+S-QEM8.3	=ES+E-M8.3	Ölflex Classic 110	4	4	4			
=ES+E-WM8.41	=ES+S-X1	=ES+S-QEM8.4	Ölflex Classic 110	4	4	1,5			

Cable overview

F10_001

Cable name	Source (from)	Target (to)	Cable type	all conductors	Conductors used	Cross-section [mm]	Length [m]	Remark	Graphical page of cable diagram
=ES+E-WM8.42	=ES+S-QEM8.4	=ES+E-M8.4	Ölflex Classic 110	4	4	1,5			
=ES+E-WM9.1	=ES+S-X1	=ES+E-XM9.1	Ölflex Classic 110	4	4	1,5			
=ES+E-WM9.01	=ES+S-QEM9	=ES+S-T9	Ölflex Servo FD 785 CP	4	4	35			
=ES+E-WM9.2	=ES+E-XK9.1	=ES+E-XM9.1	Ölflex Classic 110	4	4	1,5			
=ES+E-WM9.02	=ES+S-QEM9	=ES+E-M9	Ölflex Servo FD 785 CP	4	4	35			
=ES+E-WM9.3	=ES+E-XK9.1	=ES+E-M9.1			6				
=ES+E-WM10.1	=ES+S-X1	=ES+E-XM10.1	Ölflex Classic 110	4	4	1,5			
=ES+E-WM10.01	=ES+S-QEM10	=ES+S-T10	Ölflex Servo FD 785 CP	4	4	35			
=ES+E-WM10.2	=ES+E-XK10.1	=ES+E-XM10.1	Ölflex Classic 110	4	4	1,5			
=ES+E-WM10.02	=ES+S-QEM10	=ES+E-M10	Ölflex Servo FD 785 CP	4	4	35			
=ES+E-WM10.3	=ES+E-XK10.1	=ES+E-M10.1			6				
=ES+E-WM11.1	=ES+S-X1	=ES+E-XM11.1	Ölflex Classic 110	4	4	1,5			
=ES+E-WM11.01	=ES+S-QEM11	=ES+S-T11	Ölflex Servo FD 785 CP	4	4	35			
=ES+E-WM11.2	=ES+E-XK11.1	=ES+E-XM11.1	Ölflex Classic 110	4	4	1,5			
=ES+E-WM11.02	=ES+S-QEM11	=ES+E-M11	Ölflex Servo FD 785 CP	4	4	35			
=ES+E-WM11.3	=ES+E-XK11.1	=ES+E-M11.1			6				
=ES+E-WM12.1	=ES+S-X1	=ES+E-XM12.1	Ölflex Classic 110	4	4	1,5			
=ES+E-WM12.01	=ES+S-QEM12	=ES+S-T12	Ölflex Servo FD 785 CP	4	4	35			
=ES+E-WM12.2	=ES+E-XK12.1	=ES+E-XM12.1	Ölflex Classic 110	4	4	1,5			
=ES+E-WM12.02	=ES+S-QEM12	=ES+E-M12	Ölflex Servo FD 785 CP	4	4	35			
=ES+E-WM12.3	=ES+E-XK12.1	=ES+E-M12.1			6				
=ES+E-WM13.1	=ES+S-X1	=ES+E-XM13.1	Ölflex Classic 110	4	4	1,5			
=ES+E-WM13.01	=ES+S-QEM13	=ES+S-T13	Ölflex Servo FD 785 CP	4	4	35			
=ES+E-WM13.2	=ES+E-XK13.1	=ES+E-XM13.1	Ölflex Classic 110	4	4	1,5			
=ES+E-WM13.02	=ES+S-QEM13	=ES+E-M13	Ölflex Servo FD 785 CP	4	4	35			
=ES+E-WM13.3	=ES+E-XK13.1	=ES+E-M13.1			6				
=ES+E-WM14.1	=ES+S-X1	=ES+E-XM14.1	Ölflex Classic 110	4	4	1,5			
=ES+E-WM14.01	=ES+S-QEM14	=ES+S-T14	Ölflex Servo FD 785 CP	4	4	35			
=ES+E-WM14.2	=ES+E-XK14.1	=ES+E-XM14.1	Ölflex Classic 110	4	4	1,5			
=ES+E-WM14.02	=ES+S-QEM14	=ES+E-M14	Ölflex Servo FD 785 CP	4	4	35			
=ES+E-WM14.3	=ES+E-XK14.1	=ES+E-M14.1			6				
=ES+E-WM15.1	=ES+S-X1	=ES+E-XM15.1	Ölflex Classic 110	4	4	1,5			
=ES+E-WM15.01	=ES+S-X1	=ES+S-QEM15	Ölflex Servo FD 785 CP	4	4	35			
=ES+E-WM15.2	=ES+E-XK15.1	=ES+E-XM15.1	Ölflex Classic 110	4	4	1,5			
=ES+E-WM15.02	=ES+S-QEM15	=ES+E-M15	Ölflex Servo FD 785 CP	4	4	35			
=ES+E-WM15.3	=ES+E-XK15.1	=ES+E-M15.1			6				
=ES+E-WM16.1	=ES+S-X1	=ES+E-XM16.1	Ölflex Classic 110	4	4	1,5			
=ES+E-WM16.01	=ES+S-X1	=ES+S-QEM16	Ölflex Servo FD 785 CP	4	4	35			
=ES+E-WM16.2	=ES+E-XK16.1	=ES+E-XM16.1	Ölflex Classic 110	4	4	1,5			
=ES+E-WM16.02	=ES+S-QEM16	=ES+E-M16	Ölflex Servo FD 785 CP	4	4	35			
=ES+E-WM16.3	=ES+E-XK16.1	=ES+E-M16.1			6				
=ES+E-WM31.1	=ES+S-X1	=ES+S-QEM31	Ölflex Classic 110	4	4	2,5			
=ES+E-WM31.2	=ES+S-QEM31	=ES+E-M31	Ölflex Classic 110	4	4	2,5			
=ES+E-WM41.1	=ES+S-X1	=ES+S-QEM41	Ölflex Classic 110	4	4	1,5			
=ES+E-WM41.2	=ES+S-QEM41	=ES+E-M41	Ölflex Classic 110	4	4	1,5			
=ES+E-WML1.1	=ES+S-X11	=ES+E-ML1.1	Ölflex Classic 110	4	4	1,0			

Cable overview

F10_001

Cable name	Source (from)	Target (to)	Cable type	all conductors	Conductors used	Cross-section [mm]	Length [m]	Remark	Graphical page of cable diagram
=ES+E-WML1.2	=ES+S-X11	=ES+E-ML1.2	Ölflex Classic 110	4	4	1,0			
=ES+E-WML1.3	=ES+S-X11	=ES+E-ML1.3	Ölflex Classic 110	4	4	1,0			
=ES+E-WML1.4	=ES+S-X11	=ES+E-ML1.4	Ölflex Classic 110	4	4	1,0			
=ES+E-WML1.5	=ES+S-X11	=ES+E-ML1.5	Ölflex Classic 110	4	4	1,0			
=ES+E-WML1.6	=ES+S-X11	=ES+E-ML1.6	Ölflex Classic 110	4	4	1,0			
=ES+E-WML1.7	=ES+S-X11	=ES+E-ML1.7	Ölflex Classic 110	4	4	1,0			
=ES+E-WML1.8	=ES+S-X11	=ES+E-ML1.8	Ölflex Classic 110	4	4	1,0			
=ES+E-WML1.9	=ES+S-X11	=ES+E-ML1.9	Ölflex Classic 110	4	8	1,0			
=ES+E-WML1.10	=ES+S-X11	=ES+E-ML1.10	Ölflex Classic 110	4	8	1,0			
=ES+E-WML1.11	=ES+S-X11	=ES+E-ML1.11	Ölflex Classic 110	4	8	1,0			
=ES+E-WML1.12	=ES+S-X11	=ES+E-ML1.12	Ölflex Classic 110	4	8	1,0			
=ES+E-WML1.13	=ES+S-X11	=ES+E-ML1.13	Ölflex Classic 110	4	8	1,0			
=ES+E-WML1.14	=ES+S-X11	=ES+E-ML1.14	Ölflex Classic 110	4	8	1,0			
=ES+E-WML1.15	=ES+S-X11	=ES+E-ML1.15	Ölflex Classic 110	4	8	1,0			
=ES+E-WML1.16	=ES+S-X11	=ES+E-ML1.16	Ölflex Classic 110	4	8	1,0			
=ES+E-WML1.17	=ES+S-X11	=ES+E-ML1.17	Ölflex Classic 110	4	8	1,0			
=ES+E-WML1.18	=ES+S-X11	=ES+E-ML1.18	Ölflex Classic 110	4	8	1,0			
=ES+E-WML1.19	=ES+S-X11	=ES+E-ML1.19	Ölflex Classic 110	4	8	1,0			
=ES+E-WML1.20	=ES+S-X11	=ES+E-ML1.20	Ölflex Classic 110	4	8	1,0			
=ES+E-WML1.21	=ES+S-X11	=ES+E-ML1.21	Ölflex Classic 110	4	8	1,0			
=ES+E-WML1.22	=ES+S-X11	=ES+E-ML1.22	Ölflex Classic 110	4	8	1,0			
=ES+E-WML1.23	=ES+S-X11	=ES+E-ML1.23	Ölflex Classic 110	4	8	1,0			
=ES+E-WML1.24	=ES+S-X11	=ES+E-ML1.24	Ölflex Classic 110	4	8	1,0			
=ES+E-WML1.25	=ES+S-X11	=ES+E-ML1.25	Ölflex Classic 110	4	8	1,0			
=ES+E-WML1.26	=ES+S-X11	=ES+E-ML1.26	Ölflex Classic 110	4	8	1,0			
=ES+E-WML1.27	=ES+S-X11	=ES+E-ML1.27	Ölflex Classic 110	4	8	1,0			
=ES+E-WML1.28	=ES+S-X11	=ES+E-ML1.28	Ölflex Classic 110	4	8	1,0			
=ES+E-WML1.29	=ES+S-X11	=ES+E-ML1.29	Ölflex Classic 110	4	8	1,0			
=ES+E-WML1.30	=ES+S-X11	=ES+E-ML1.30	Ölflex Classic 110	4	8	1,0			
=ES+E-WML1.31	=ES+S-X11	=ES+E-ML1.31	Ölflex Classic 110	4	8	1,0			
=ES+E-WML1.32	=ES+S-X11	=ES+E-ML1.32	Ölflex Classic 110	4	8	1,0			
=ES+E-WML1.33	=ES+S-X11	=ES+E-ML1.33	Ölflex Classic 110	4	8	1,0			
=ES+E-WML1.34	=ES+S-X11	=ES+E-ML1.34	Ölflex Classic 110	4	8	1,0			
=ES+E-WML1.35	=ES+S-X11	=ES+E-ML1.35	Ölflex Classic 110	4	8	1,0			
=ES+E-WML1.36	=ES+S-X11	=ES+E-ML1.36	Ölflex Classic 110	4	8	1,0			
=ES+E-WML1.37	=ES+S-X11	=ES+E-ML1.37	Ölflex Classic 110	4	8	1,0			
=ES+E-WML1.38	=ES+S-X11	=ES+E-ML1.38	Ölflex Classic 110	4	8	1,0			
=ES+E-WML1.39	=ES+S-X11	=ES+E-ML1.39	Ölflex Classic 110	4	8	1,0			
=ES+E-WML1.40	=ES+S-X11	=ES+E-ML1.40	Ölflex Classic 110	4	8	1,0			
=ES+E-WML1.41	=ES+S-X11	=ES+E-ML1.41	Ölflex Classic 110	4	8	1,0			
=ES+E-WML1.42	=ES+S-X11	=ES+E-ML1.42	Ölflex Classic 110	4	8	1,0			
=ES+E-WML1.43	=ES+S-X11	=ES+E-ML1.43	Ölflex Classic 110	4	8	1,0			
=ES+E-WML1.44	=ES+S-X11	=ES+E-ML1.44	Ölflex Classic 110	4	8	1,0			
=ES+E-WML1.45	=ES+S-X11	=ES+E-ML1.45	Ölflex Classic 110	4	8	1,0			
=ES+E-WML1.46	=ES+S-X11	=ES+E-ML1.46	Ölflex Classic 110	4	8	1,0			
=ES+E-WML1.47	=ES+S-X11	=ES+E-ML1.47	Ölflex Classic 110	4	8	1,0			

Cable overview

F10_001

Cable name	Source (from)	Target (to)	Cable type	all conductors	Conductors used	Cross-section [mm]	Length [m]	Remark	Graphical page of cable diagram
=ES+E-WML1.48	=ES+S-X11	=ES+E-ML1.48	Ölflex Classic 110	4	8	1,0			
=ES+E-WML1.49	=ES+S-X11	=ES+E-ML1.49	Ölflex Classic 110	4	8	1,0			
=ES+E-WML1.50	=ES+S-X11	=ES+E-ML1.50	Ölflex Classic 110	4	8	1,0			
=ES+E-WML1.51	=ES+S-X11	=ES+E-ML1.51	Ölflex Classic 110	4	8	1,0			
=ES+E-WML1.52	=ES+S-X11	=ES+E-ML1.52	Ölflex Classic 110	4	8	1,0			
=ES+E-WML1.53	=ES+S-X11	=ES+E-ML1.53	Ölflex Classic 110	4	8	1,0			
=ES+E-WML1.54	=ES+S-X11	=ES+E-ML1.54	Ölflex Classic 110	4	8	1,0			
=ES+E-WML1.55	=ES+S-X21	=ES+E-ML1.55	Ölflex Classic 110	4	8	1,0			
=ES+E-WML1.56	=ES+S-X21	=ES+E-ML1.56	Ölflex Classic 110	4	8	1,0			
=ES+E-WML1.57	=ES+S-X21	=ES+E-ML1.57	Ölflex Classic 110	4	8	1,0			
=ES+E-WML1.58	=ES+S-X21	=ES+E-ML1.58	Ölflex Classic 110	4	8	1,0			
=ES+E-WML1.59	=ES+S-X21	=ES+E-ML1.59	Ölflex Classic 110	4	8	1,0			
=ES+E-WML1.60	=ES+S-X21	=ES+E-ML1.60	Ölflex Classic 110	4	8	1,0			
=ES+E-WML1.61	=ES+S-X21	=ES+E-ML1.61	Ölflex Classic 110	4	8	1,0			
=ES+E-WML1.62	=ES+S-X21	=ES+E-ML1.62	Ölflex Classic 110	4	8	1,0			
=ES+E-WML1.63	=ES+S-X21	=ES+E-ML1.63	Ölflex Classic 110	4	8	1,0			
=ES+E-WML1.64	=ES+S-X21	=ES+E-ML1.64	Ölflex Classic 110	4	4	1,0			
=ES+E-WML1.65	=ES+S-X21	=ES+E-ML1.65	Ölflex Classic 110	4	4	1,0			
=ES+E-WML1.66	=ES+S-X21	=ES+E-ML1.66	Ölflex Classic 110	4	4	1,0			
=ES+E-WML1.67	=ES+S-X21	=ES+E-ML1.67	Ölflex Classic 110	4	4	1,0			
=ES+E-WML1.68	=ES+S-X21	=ES+E-ML1.68	Ölflex Classic 110	4	4	1,0			
=ES+E-WML1.69	=ES+S-X21	=ES+E-ML1.69	Ölflex Classic 110	4	4	1,0			
=ES+E-WML1.70	=ES+S-X21	=ES+E-ML1.70	Ölflex Classic 110	4	4	1,0			
=ES+E-WML1.71	=ES+S-X21	=ES+E-ML1.71	Ölflex Classic 110	4	4	1,0			
=ES+E-WML1.72	=ES+S-X21	=ES+E-ML1.72	Ölflex Classic 110	4	4	1,0			
=ES+E-WML1.73	=ES+S-X21	=ES+E-ML1.73	Ölflex Classic 110	4	4	1,0			
=ES+E-WML1.74	=ES+S-X21	=ES+E-ML1.74	Ölflex Classic 110	4	4	1,0			
=ES+E-WML1.75	=ES+S-X21	=ES+E-ML1.75	Ölflex Classic 110	4	4	1,0			
=ES+E-WML1.76	=ES+S-X21	=ES+E-ML1.76	Ölflex Classic 110	4	4	1,0			
=ES+E-WML1.77	=ES+S-X21	=ES+E-ML1.77	Ölflex Classic 110	4	4	1,0			
=ES+E-WML1.78	=ES+S-X21	=ES+E-ML1.78	Ölflex Classic 110	4	4	1,0			
=ES+E-WML1.79	=ES+S-X21	=ES+E-ML1.79	Ölflex Classic 110	4	4	1,0			
=ES+E-WML1.80	=ES+S-X21	=ES+E-ML1.80	Ölflex Classic 110	4	4	1,0			
=ES+E-WML1.81	=ES+S-X21	=ES+E-ML1.81	Ölflex Classic 110	4	4	1,0			
=ES+E-WML1.82	=ES+S-X21	=ES+E-ML1.82	Ölflex Classic 110	4	4	1,0			
=ES+E-WML1.83	=ES+S-X21	=ES+E-ML1.83	Ölflex Classic 110	4	4	1,0			
=ES+E-WML1.84	=ES+S-X21	=ES+E-ML1.84	Ölflex Classic 110	4	4	1,0			
=ES+E-WML1.85	=ES+S-X21	=ES+E-ML1.85	Ölflex Classic 110	4	4	1,0			
=ES+E-WML1.86	=ES+S-X21	=ES+E-ML1.86	Ölflex Classic 110	4	4	1,0			
=ES+E-WML1.87	=ES+S-X21	=ES+E-ML1.87	Ölflex Classic 110	4	4	1,0			
=ES+E-WML1.88	=ES+S-X21	=ES+E-ML1.88	Ölflex Classic 110	4	4	1,0			
=ES+E-WML1.89	=ES+S-X21	=ES+E-ML1.89	Ölflex Classic 110	4	4	1,0			
=ES+E-WML1.90	=ES+S-X21	=ES+E-ML1.90	Ölflex Classic 110	4	4	1,0			
=ES+E-WML1.91	=ES+S-X21	=ES+E-ML1.91	Ölflex Classic 110	4	4	1,0			
=ES+E-WML1.92	=ES+S-X21	=ES+E-ML1.92	Ölflex Classic 110	4	4	1,0			
=ES+E-WML1.93	=ES+S-X21	=ES+E-ML1.93	Ölflex Classic 110	4	4	1,0			

Cable overview

F10_001

Cable name	Source (from)	Target (to)	Cable type	all conductors	Conductors used	Cross-section [mm]	Length [m]	Remark	Graphical page of cable diagram
=ES+E-WML1.95	=ES+S-X21	=ES+E-ML1.95	Ölflex Classic 110	4	4	1,0			
=ES+E-WML1.97	=ES+S-X21	=ES+E-ML1.97	Ölflex Classic 110	4	4	1,0			
=ES+E-WML1.99	=ES+S-X21	=ES+E-ML1.99	Ölflex Classic 110	4	4	1,0			
=ES+E-WML1.101	=ES+S-X21	=ES+E-ML1.101	Ölflex Classic 110	4	4	1,0			
=ES+E-WML1.102	=ES+S-X21	=ES+E-ML1.102	Ölflex Classic 110	4	4	1,0			
=ES+E-WML2.1	=ES+S-X21	=ES+E-ML2.1	Ölflex Classic 110	4	4	1,0			
=ES+E-WML2.2	=ES+S-X21	=ES+E-ML2.2	Ölflex Classic 110	4	4	1,0			
=ES+E-WML2.3	=ES+S-X21	=ES+E-ML2.3	Ölflex Classic 110	4	4	1,0			
=ES+E-WML2.4	=ES+S-X21	=ES+E-ML2.4	Ölflex Classic 110	4	4	1,0			
=ES+E-WML2.5	=ES+S-X21	=ES+E-ML2.5	Ölflex Classic 110	4	4	1,0			
=ES+E-WML2.6	=ES+S-X21	=ES+E-ML2.6	Ölflex Classic 110	4	4	1,0			
=ES+E-WML2.7	=ES+S-X21	=ES+E-ML2.7	Ölflex Classic 110	4	4	1,0			
=ES+E-WML2.8	=ES+S-X21	=ES+E-ML2.8	Ölflex Classic 110	4	4	1,0			
=ES+E-WML2.9	=ES+S-X21	=ES+E-ML2.9	Ölflex Classic 110	4	4	1,0			
=ES+E-WML2.10	=ES+S-X21	=ES+E-ML2.10	Ölflex Classic 110	4	4	1,0			
=ES+E-WML2.11	=ES+S-X31	=ES+E-ML2.11	Ölflex Classic 110	4	4	1,0			
=ES+E-WML2.12	=ES+S-X31	=ES+E-ML2.12	Ölflex Classic 110	4	4	1,0			
=ES+E-WML2.13	=ES+S-X31	=ES+E-ML2.13	Ölflex Classic 110	4	4	1,0			
=ES+E-WML2.14	=ES+S-X31	=ES+E-ML2.14	Ölflex Classic 110	4	4	1,0			
=ES+E-WML2.15	=ES+S-X31	=ES+E-ML2.15	Ölflex Classic 110	4	4	1,0			
=ES+E-WML2.16	=ES+S-X31	=ES+E-ML2.16	Ölflex Classic 110	4	4	1,0			
=ES+E-WML2.17	=ES+S-X31	=ES+E-ML2.17	Ölflex Classic 110	4	4	1,0			
=ES+E-WML2.18	=ES+S-X31	=ES+E-ML2.18	Ölflex Classic 110	4	4	1,0			
=ES+E-WML2.19	=ES+S-X31	=ES+E-ML2.19	Ölflex Classic 110	4	4	1,0			
=ES+E-WML2.20	=ES+S-X31	=ES+E-ML2.20	Ölflex Classic 110	4	4	1,0			
=ES+E-WML2.21	=ES+S-X31	=ES+E-ML2.21	Ölflex Classic 110	4	4	1,0			
=ES+E-WML2.22	=ES+S-X31	=ES+E-ML2.22	Ölflex Classic 110	4	4	1,0			
=ES+E-WML2.23	=ES+S-X31	=ES+E-ML2.23	Ölflex Classic 110	4	4	1,0			
=ES+E-WML2.24	=ES+S-X31	=ES+E-ML2.24	Ölflex Classic 110	4	4	1,0			
=ES+E-WML2.25	=ES+S-X31	=ES+E-ML2.25	Ölflex Classic 110	4	4	1,0			
=ES+E-WML2.26	=ES+S-X31	=ES+E-ML2.26	Ölflex Classic 110	4	4	1,0			
=ES+E-WML2.27	=ES+S-X31	=ES+E-ML2.27	Ölflex Classic 110	4	4	1,0			
=ES+E-WML2.28	=ES+S-X31	=ES+E-ML2.28	Ölflex Classic 110	4	4	1,0			
=ES+E-WML2.29	=ES+S-X31	=ES+E-ML2.29	Ölflex Classic 110	4	4	1,0			
=ES+E-WML2.30	=ES+S-X31	=ES+E-ML2.30	Ölflex Classic 110	4	4	1,0			
=ES+E-WML2.31	=ES+S-X31	=ES+E-ML2.31	Ölflex Classic 110	4	4	1,0			
=ES+E-WML2.32	=ES+S-X31	=ES+E-ML2.32	Ölflex Classic 110	4	4	1,0			
=ES+E-WML2.33	=ES+S-X31	=ES+E-ML2.33	Ölflex Classic 110	4	4	1,0			
=ES+E-WML2.34	=ES+S-X31	=ES+E-ML2.34	Ölflex Classic 110	4	4	1,0			
=ES+E-WML2.35	=ES+S-X31	=ES+E-ML2.35	Ölflex Classic 110	4	4	1,0			
=ES+E-WML2.36	=ES+S-X31	=ES+E-ML2.36	Ölflex Classic 110	4	4	1,0			
=ES+E-WML2.37	=ES+S-X31	=ES+E-ML2.37	Ölflex Classic 110	4	4	1,0			
=ES+E-WML2.38	=ES+S-X31	=ES+E-ML2.38	Ölflex Classic 110	4	4	1,0			
=ES+E-WML2.39	=ES+S-X31	=ES+E-ML2.39	Ölflex Classic 110	4	4	1,0			
=ES+E-WML2.40	=ES+S-X31	=ES+E-ML2.40	Ölflex Classic 110	4	4	1,0			
=ES+E-WML2.41	=ES+S-X31	=ES+E-ML2.41	Ölflex Classic 110	4	4	1,0			

Cable overview

F10_001

Cable name	Source (from)	Target (to)	Cable type	all conductors	Conductors used	Cross-section [mm]	Length [m]	Remark	Graphical page of cable diagram
=ES+E-WML2.42	=ES+S-X31	=ES+E-ML2.42	Ölflex Classic 110	4	4	1,0			
=ES+E-WML2.43	=ES+S-X31	=ES+E-ML2.43	Ölflex Classic 110	4	4	1,0			
=ES+E-WML2.44	=ES+S-X31	=ES+E-ML2.44	Ölflex Classic 110	4	4	1,0			
=ES+E-WML2.45	=ES+S-X31	=ES+E-ML2.45	Ölflex Classic 110	4	4	1,0			
=ES+E-WML2.46	=ES+S-X31	=ES+E-ML2.46	Ölflex Classic 110	4	4	1,0			
=ES+E-WML2.47	=ES+S-X31	=ES+E-ML2.47	Ölflex Classic 110	4	4	1,0			
=ES+E-WML2.48	=ES+S-X31	=ES+E-ML2.48	Ölflex Classic 110	4	4	1,0			
=ES+E-WML2.49	=ES+S-X31	=ES+E-ML2.49	Ölflex Classic 110	4	4	1,0			
=ES+E-WML2.50	=ES+S-X31	=ES+E-ML2.50	Ölflex Classic 110	4	4	1,0			
=ES+E-WML2.51	=ES+S-X31	=ES+E-ML2.51	Ölflex Classic 110	4	4	1,0			
=ES+E-WML2.52	=ES+S-X31	=ES+E-ML2.52	Ölflex Classic 110	4	4	1,0			
=ES+E-WML2.53	=ES+S-X31	=ES+E-ML2.53	Ölflex Classic 110	4	4	1,0			
=ES+E-WML2.54	=ES+S-X31	=ES+E-ML2.54	Ölflex Classic 110	4	4	1,0			
=ES+E-WML2.55	=ES+S-X31	=ES+E-ML2.55	Ölflex Classic 110	4	4	1,0			
=ES+E-WML2.56	=ES+S-X31	=ES+E-ML2.56	Ölflex Classic 110	4	4	1,0			
=ES+E-WML2.57	=ES+S-X31	=ES+E-ML2.57	Ölflex Classic 110	4	4	1,0			
=ES+E-WML2.58	=ES+S-X31	=ES+E-ML2.58	Ölflex Classic 110	4	4	1,0			
=ES+E-WML2.59	=ES+S-X31	=ES+E-ML2.59	Ölflex Classic 110	4	4	1,0			
=ES+E-WML2.60	=ES+S-X31	=ES+E-ML2.60	Ölflex Classic 110	4	4	1,0			
=ES+E-WML2.61	=ES+S-X31	=ES+E-ML2.61	Ölflex Classic 110	4	4	1,0			
=ES+E-WML2.62	=ES+S-X31	=ES+E-ML2.62	Ölflex Classic 110	4	4	1,0			
=ES+E-WML2.63	=ES+S-X31	=ES+E-ML2.63	Ölflex Classic 110	4	4	1,0			
=ES+E-WRA32.3	=ES+S-X5	=ES+E-RA32.3	Ölflex-140 CY	3	3	0,75			
=ES+E-WRM1.1	=ES+S-T1.1	=ES+E-M1.1	Ölflex Classic 110	3	2	1,0			
=ES+E-WRM1.2	=ES+S-T1.2	=ES+E-M1.2	Ölflex Classic 110	3	2	1,0			
=ES+E-WRM1.3	=ES+S-T1.3	=ES+E-M1.3	Ölflex Classic 110	3	2	1,0			
=ES+E-WRM1.4	=ES+S-T1.4	=ES+E-M1.4	Ölflex Classic 110	3	2	1,0			
=ES+E-WRM1.5	=ES+S-T1.5	=ES+E-M1.5	Ölflex Classic 110	3	2	1,0			
=ES+E-WRM1.6	=ES+S-T1.6	=ES+E-M1.6	Ölflex Classic 110	3	2	1,0			
=ES+E-WRM1.7	=ES+S-T1.7	=ES+E-M1.7	Ölflex Classic 110	3	2	1,0			
=ES+E-WRM1.8	=ES+S-T1.8	=ES+E-M1.8	Ölflex Classic 110	3	2	1,0			
=ES+E-WRM1.9	=ES+S-T1.9	=ES+E-M1.9	Ölflex Classic 110	3	5	1,0			
=ES+E-WRM1.10	=ES+S-T1.10	=ES+E-M1.10	Ölflex Classic 110	3	5	1,0			
=ES+E-WRM1.11	=ES+S-T1.11	=ES+E-M1.11	Ölflex Classic 110	3	5	1,0			
=ES+E-WRM1.12	=ES+S-T1.12	=ES+E-M1.12	Ölflex Classic 110	3	5	1,0			
=ES+E-WRM1.13	=ES+S-T1.13	=ES+E-M1.13	Ölflex Classic 110	3	5	1,0			
=ES+E-WRM1.14	=ES+S-T1.14	=ES+E-M1.14	Ölflex Classic 110	3	5	1,0			
=ES+E-WRM1.15	=ES+S-T1.15	=ES+E-M1.15	Ölflex Classic 110	3	5	1,0			
=ES+E-WRM1.16	=ES+S-T1.16	=ES+E-M1.16	Ölflex Classic 110	3	5	1,0			
=ES+E-WRM1.17	=ES+S-T1.17	=ES+E-M1.17	Ölflex Classic 110	3	5	1,0			
=ES+E-WRM1.18	=ES+S-T1.18	=ES+E-M1.18	Ölflex Classic 110	3	5	1,0			
=ES+E-WRM1.19	=ES+S-T1.19	=ES+E-M1.19	Ölflex Classic 110	3	5	1,0			
=ES+E-WRM1.20	=ES+S-T1.20	=ES+E-M1.20	Ölflex Classic 110	3	5	1,0			
=ES+E-WRM1.21	=ES+S-T1.21	=ES+E-M1.21	Ölflex Classic 110	3	5	1,0			
=ES+E-WRM1.22	=ES+S-T1.22	=ES+E-M1.22	Ölflex Classic 110	3	5	1,0			

Cable overview

F10_001

Cable name	Source (from)	Target (to)	Cable type	all conductors	Conductors used	Cross-section [mm]	Length [m]	Remark	Graphical page of cable diagram
=ES+E-WRM1.23	=ES+S-T1.23	=ES+E-M1.23	Ölflex Classic 110	3	5	1,0			
=ES+E-WRM1.24	=ES+S-T1.24	=ES+E-M1.24	Ölflex Classic 110	3	5	1,0			
=ES+E-WRM1.25	=ES+S-T1.25	=ES+E-M1.25	Ölflex Classic 110	3	5	1,0			
=ES+E-WRM1.26	=ES+S-T1.26	=ES+E-M1.26	Ölflex Classic 110	3	5	1,0			
=ES+E-WRM1.27	=ES+S-T1.27	=ES+E-M1.27	Ölflex Classic 110	3	5	1,0			
=ES+E-WRM1.28	=ES+S-T1.28	=ES+E-M1.28	Ölflex Classic 110	3	5	1,0			
=ES+E-WRM1.29	=ES+S-T1.29	=ES+E-M1.29	Ölflex Classic 110	3	5	1,0			
=ES+E-WRM1.30	=ES+S-T1.30	=ES+E-M1.30	Ölflex Classic 110	3	5	1,0			
=ES+E-WRM1.31	=ES+S-T1.31	=ES+E-M1.31	Ölflex Classic 110	3	5	1,0			
=ES+E-WRM1.32	=ES+S-T1.32	=ES+E-M1.32	Ölflex Classic 110	3	5	1,0			
=ES+E-WRM1.33	=ES+S-T1.33	=ES+E-M1.33	Ölflex Classic 110	3	5	1,0			
=ES+E-WRM1.34	=ES+S-T1.34	=ES+E-M1.34	Ölflex Classic 110	3	5	1,0			
=ES+E-WRM1.35	=ES+S-T1.35	=ES+E-M1.35	Ölflex Classic 110	3	5	1,0			
=ES+E-WRM1.36	=ES+S-T1.36	=ES+E-M1.36	Ölflex Classic 110	3	5	1,0			
=ES+E-WRM1.37	=ES+S-T1.37	=ES+E-M1.37	Ölflex Classic 110	3	5	1,0			
=ES+E-WRM1.38	=ES+S-T1.38	=ES+E-M1.38	Ölflex Classic 110	3	5	1,0			
=ES+E-WRM1.39	=ES+S-T1.39	=ES+E-M1.39	Ölflex Classic 110	3	5	1,0			
=ES+E-WRM1.40	=ES+S-T1.40	=ES+E-M1.40	Ölflex Classic 110	3	5	1,0			
=ES+E-WRM1.41	=ES+S-T1.41	=ES+E-M1.41	Ölflex Classic 110	3	5	1,0			
=ES+E-WRM1.42	=ES+S-T1.42	=ES+E-M1.42	Ölflex Classic 110	3	5	1,0			
=ES+E-WRM1.43	=ES+S-T1.43	=ES+E-M1.43	Ölflex Classic 110	3	5	1,0			
=ES+E-WRM1.44	=ES+S-T1.44	=ES+E-M1.44	Ölflex Classic 110	3	5	1,0			
=ES+E-WRM1.45	=ES+S-T1.45	=ES+E-M1.45	Ölflex Classic 110	3	5	1,0			
=ES+E-WRM1.46	=ES+S-T1.46	=ES+E-M1.46	Ölflex Classic 110	3	5	1,0			
=ES+E-WRM1.47	=ES+S-T1.47	=ES+E-M1.47	Ölflex Classic 110	3	5	1,0			
=ES+E-WRM1.48	=ES+S-T1.48	=ES+E-M1.48	Ölflex Classic 110	3	5	1,0			
=ES+E-WRM1.49	=ES+S-T1.49	=ES+E-M1.49	Ölflex Classic 110	3	5	1,0			
=ES+E-WRM1.50	=ES+S-T1.50	=ES+E-M1.50	Ölflex Classic 110	3	5	1,0			
=ES+E-WRM1.51	=ES+S-T1.51	=ES+E-M1.51	Ölflex Classic 110	3	5	1,0			
=ES+E-WRM1.52	=ES+S-T1.52	=ES+E-M1.52	Ölflex Classic 110	3	5	1,0			
=ES+E-WRM1.53	=ES+S-T1.53	=ES+E-M1.53	Ölflex Classic 110	3	5	1,0			
=ES+E-WRM1.54	=ES+S-T1.54	=ES+E-M1.54	Ölflex Classic 110	3	5	1,0			
=ES+E-WRM1.55	=ES+S-T1.55	=ES+E-M1.55	Ölflex Classic 110	3	5	1,0			
=ES+E-WRM1.56	=ES+S-T1.56	=ES+E-M1.56	Ölflex Classic 110	3	5	1,0			
=ES+E-WRM1.57	=ES+S-T1.57	=ES+E-M1.57	Ölflex Classic 110	3	5	1,0			
=ES+E-WRM1.58	=ES+S-T1.58	=ES+E-M1.58	Ölflex Classic 110	3	5	1,0			
=ES+E-WRM1.59	=ES+S-T1.59	=ES+E-M1.59	Ölflex Classic 110	3	5	1,0			
=ES+E-WRM1.60	=ES+S-T1.60	=ES+E-M1.60	Ölflex Classic 110	3	5	1,0			
=ES+E-WRM1.61	=ES+S-T1.61	=ES+E-M1.61	Ölflex Classic 110	3	5	1,0			
=ES+E-WRM1.62	=ES+S-T1.62	=ES+E-M1.62	Ölflex Classic 110	3	5	1,0			
=ES+E-WRM1.63	=ES+S-T1.63	=ES+E-M1.63	Ölflex Classic 110	3	5	1,0			
=ES+E-WRM1.64	=ES+S-T1.64	=ES+E-M1.64	Ölflex Classic 110	3	2	1,0			
=ES+E-WRM1.65	=ES+S-T1.65	=ES+E-M1.65	Ölflex Classic 110	3	2	1,0			
=ES+E-WRM1.66	=ES+S-T1.66	=ES+E-M1.66	Ölflex Classic 110	3	2	1,0			
=ES+E-WRM1.67	=ES+S-T1.67	=ES+E-M1.67	Ölflex Classic 110	3	2	1,0			
=ES+E-WRM1.68	=ES+S-T1.68	=ES+E-M1.68	Ölflex Classic 110	3	2	1,0			

Cable overview

F10_001

Cable name	Source (from)	Target (to)	Cable type	all conductors	Conductors used	Cross-section [mm]	Length [m]	Remark	Graphical page of cable diagram
=ES+E-WRM1.69	=ES+S-T1.69	=ES+E-M1.69	Ölflex Classic 110	3	2	1,0			
=ES+E-WRM1.70	=ES+S-T1.70	=ES+E-M1.70	Ölflex Classic 110	3	2	1,0			
=ES+E-WRM1.71	=ES+S-T1.71	=ES+E-M1.71	Ölflex Classic 110	3	2	1,0			
=ES+E-WRM1.72	=ES+S-T1.72	=ES+E-M1.72	Ölflex Classic 110	3	2	1,0			
=ES+E-WRM1.73	=ES+S-T1.73	=ES+E-M1.73	Ölflex Classic 110	3	2	1,0			
=ES+E-WRM1.74	=ES+S-T1.74	=ES+E-M1.74	Ölflex Classic 110	3	2	1,0			
=ES+E-WRM1.75	=ES+S-T1.75	=ES+E-M1.75	Ölflex Classic 110	3	2	1,0			
=ES+E-WRM1.76	=ES+S-T1.76	=ES+E-M1.76	Ölflex Classic 110	3	2	1,0			
=ES+E-WRM1.77	=ES+S-T1.77	=ES+E-M1.77	Ölflex Classic 110	3	2	1,0			
=ES+E-WRM1.78	=ES+S-T1.78	=ES+E-M1.78	Ölflex Classic 110	3	2	1,0			
=ES+E-WRM1.79	=ES+S-T1.79	=ES+E-M1.79	Ölflex Classic 110	3	2	1,0			
=ES+E-WRM1.80	=ES+S-T1.80	=ES+E-M1.80	Ölflex Classic 110	3	2	1,0			
=ES+E-WRM1.81	=ES+S-T1.81	=ES+E-M1.81	Ölflex Classic 110	3	2	1,0			
=ES+E-WRM1.82	=ES+S-T1.82	=ES+E-M1.82	Ölflex Classic 110	3	2	1,0			
=ES+E-WRM1.83	=ES+S-T1.83	=ES+E-M1.83	Ölflex Classic 110	3	2	1,0			
=ES+E-WRM1.84	=ES+S-T1.84	=ES+E-M1.84	Ölflex Classic 110	3	2	1,0			
=ES+E-WRM1.85	=ES+S-T1.85	=ES+E-M1.85	Ölflex Classic 110	3	2	1,0			
=ES+E-WRM1.86	=ES+S-T1.86	=ES+E-M1.86	Ölflex Classic 110	3	2	1,0			
=ES+E-WRM1.87	=ES+S-T1.87	=ES+E-M1.87	Ölflex Classic 110	3	2	1,0			
=ES+E-WRM1.88	=ES+S-T1.88	=ES+E-M1.88	Ölflex Classic 110	3	2	1,0			
=ES+E-WRM1.89	=ES+S-T1.89	=ES+E-M1.89	Ölflex Classic 110	3	2	1,0			
=ES+E-WRM1.90	=ES+S-T1.90	=ES+E-M1.90	Ölflex Classic 110	3	2	1,0			
=ES+E-WRM1.91	=ES+S-T1.91	=ES+E-M1.91	Ölflex Classic 110	3	2	1,0			
=ES+E-WRM1.92	=ES+S-T1.92	=ES+E-M1.92	Ölflex Classic 110	3	2	1,0			
=ES+E-WRM1.93	=ES+S-T1.93	=ES+E-M1.93	Ölflex Classic 110	3	2	1,0			
=ES+E-WRM1.95	=ES+S-T1.95	=ES+E-M1.95	Ölflex Classic 110	3	2	1,0			
=ES+E-WRM1.97	=ES+S-T1.97	=ES+E-M1.97	Ölflex Classic 110	3	2	1,0			
=ES+E-WRM1.99	=ES+S-T1.99	=ES+E-M1.99	Ölflex Classic 110	3	2	1,0			
=ES+E-WRM1.101	=ES+S-T1.101	=ES+E-M1.101	Ölflex Classic 110	3	2	1,0			
=ES+E-WRM1.102	=ES+S-T1.102	=ES+E-M1.102	Ölflex Classic 110	3	2	1,0			
=ES+E-WRM2.1	=ES+S-T2.1	=ES+E-M2.1	Ölflex Classic 110	3	2	1,0			
=ES+E-WRM2.2	=ES+S-T2.2	=ES+E-M2.2	Ölflex Classic 110	3	2	1,0			
=ES+E-WRM2.3	=ES+S-T2.3	=ES+E-M2.3	Ölflex Classic 110	3	2	1,0			
=ES+E-WRM2.4	=ES+S-T2.4	=ES+E-M2.4	Ölflex Classic 110	3	2	1,0			
=ES+E-WRM2.5	=ES+S-T2.5	=ES+E-M2.5	Ölflex Classic 110	3	2	1,0			
=ES+E-WRM2.6	=ES+S-T2.6	=ES+E-M2.6	Ölflex Classic 110	3	2	1,0			
=ES+E-WRM2.7	=ES+S-T2.7	=ES+E-M2.7	Ölflex Classic 110	3	2	1,0			
=ES+E-WRM2.8	=ES+S-T2.8	=ES+E-M2.8	Ölflex Classic 110	3	2	1,0			
=ES+E-WRM2.9	=ES+S-T2.9	=ES+E-M2.9	Ölflex Classic 110	3	2	1,0			
=ES+E-WRM2.10	=ES+S-T2.10	=ES+E-M2.10	Ölflex Classic 110	3	2	1,0			
=ES+E-WRM2.11	=ES+S-T2.11	=ES+E-M2.11	Ölflex Classic 110	3	2	1,0			
=ES+E-WRM2.12	=ES+S-T2.12	=ES+E-M2.12	Ölflex Classic 110	3	2	1,0			
=ES+E-WRM2.13	=ES+S-T2.13	=ES+E-M2.13	Ölflex Classic 110	3	2	1,0			
=ES+E-WRM2.14	=ES+S-T2.14	=ES+E-M2.14	Ölflex Classic 110	3	2	1,0			
=ES+E-WRM2.15	=ES+S-T2.15	=ES+E-M2.15	Ölflex Classic 110	3	2	1,0			
=ES+E-WRM2.16	=ES+S-T2.16	=ES+E-M2.16	Ölflex Classic 110	3	2	1,0			

Cable overview

F10_001

Cable name	Source (from)	Target (to)	Cable type	all conductors	Conductors used	Cross-section [mm]	Length [m]	Remark	Graphical page of cable diagram
=ES+E-WRM2.17	=ES+S-T2.17	=ES+E-M2.17	Ölflex Classic 110	3	2	1,0			
=ES+E-WRM2.18	=ES+S-T2.18	=ES+E-M2.18	Ölflex Classic 110	3	2	1,0			
=ES+E-WRM2.19	=ES+S-T2.19	=ES+E-M2.19	Ölflex Classic 110	3	2	1,0			
=ES+E-WRM2.20	=ES+S-T2.20	=ES+E-M2.20	Ölflex Classic 110	3	2	1,0			
=ES+E-WRM2.21	=ES+S-T2.21	=ES+E-M2.21	Ölflex Classic 110	3	2	1,0			
=ES+E-WRM2.22	=ES+S-T2.22	=ES+E-M2.22	Ölflex Classic 110	3	2	1,0			
=ES+E-WRM2.23	=ES+S-T2.23	=ES+E-M2.23	Ölflex Classic 110	3	2	1,0			
=ES+E-WRM2.24	=ES+S-T2.24	=ES+E-M2.24	Ölflex Classic 110	3	2	1,0			
=ES+E-WRM2.25	=ES+S-T2.25	=ES+E-M2.25	Ölflex Classic 110	3	2	1,0			
=ES+E-WRM2.26	=ES+S-T2.26	=ES+E-M2.26	Ölflex Classic 110	3	2	1,0			
=ES+E-WRM2.27	=ES+S-T2.27	=ES+E-M2.27	Ölflex Classic 110	3	2	1,0			
=ES+E-WRM2.28	=ES+S-T2.28	=ES+E-M2.28	Ölflex Classic 110	3	2	1,0			
=ES+E-WRM2.29	=ES+S-T2.29	=ES+E-M2.29	Ölflex Classic 110	3	2	1,0			
=ES+E-WRM2.30	=ES+S-T2.30	=ES+E-M2.30	Ölflex Classic 110	3	2	1,0			
=ES+E-WRM2.31	=ES+S-T2.31	=ES+E-M2.31	Ölflex Classic 110	3	2	1,0			
=ES+E-WRM2.32	=ES+S-T2.32	=ES+E-M2.32	Ölflex Classic 110	3	2	1,0			
=ES+E-WRM2.33	=ES+S-T2.33	=ES+E-M2.33	Ölflex Classic 110	3	2	1,0			
=ES+E-WRM2.34	=ES+S-T2.34	=ES+E-M2.34	Ölflex Classic 110	3	2	1,0			
=ES+E-WRM2.35	=ES+S-T2.35	=ES+E-M2.35	Ölflex Classic 110	3	2	1,0			
=ES+E-WRM2.36	=ES+S-T2.36	=ES+E-M2.36	Ölflex Classic 110	3	2	1,0			
=ES+E-WRM2.37	=ES+S-T2.37	=ES+E-M2.37	Ölflex Classic 110	3	2	1,0			
=ES+E-WRM2.38	=ES+S-T2.38	=ES+E-M2.38	Ölflex Classic 110	3	2	1,0			
=ES+E-WRM2.39	=ES+S-T2.39	=ES+E-M2.39	Ölflex Classic 110	3	2	1,0			
=ES+E-WRM2.40	=ES+S-T2.40	=ES+E-M2.40	Ölflex Classic 110	3	2	1,0			
=ES+E-WRM2.41	=ES+S-T2.41	=ES+E-M2.41	Ölflex Classic 110	3	2	1,0			
=ES+E-WRM2.42	=ES+S-T2.42	=ES+E-M2.42	Ölflex Classic 110	3	2	1,0			
=ES+E-WRM2.43	=ES+S-T2.43	=ES+E-M2.43	Ölflex Classic 110	3	2	1,0			
=ES+E-WRM2.44	=ES+S-T2.44	=ES+E-M2.44	Ölflex Classic 110	3	2	1,0			
=ES+E-WRM2.45	=ES+S-T2.45	=ES+E-M2.45	Ölflex Classic 110	3	2	1,0			
=ES+E-WRM2.46	=ES+S-T2.46	=ES+E-M2.46	Ölflex Classic 110	3	2	1,0			
=ES+E-WRM2.47	=ES+S-T2.47	=ES+E-M2.47	Ölflex Classic 110	3	2	1,0			
=ES+E-WRM2.48	=ES+S-T2.48	=ES+E-M2.48	Ölflex Classic 110	3	2	1,0			
=ES+E-WRM2.49	=ES+S-T2.49	=ES+E-M2.49	Ölflex Classic 110	3	2	1,0			
=ES+E-WRM2.50	=ES+S-T2.50	=ES+E-M2.50	Ölflex Classic 110	3	2	1,0			
=ES+E-WRM2.51	=ES+S-T2.51	=ES+E-M2.51	Ölflex Classic 110	3	2	1,0			
=ES+E-WRM2.52	=ES+S-T2.52	=ES+E-M2.52	Ölflex Classic 110	3	2	1,0			
=ES+E-WRM2.53	=ES+S-T2.53	=ES+E-M2.53	Ölflex Classic 110	3	2	1,0			
=ES+E-WRM2.54	=ES+S-T2.54	=ES+E-M2.54	Ölflex Classic 110	3	2	1,0			
=ES+E-WRM2.55	=ES+S-T2.55	=ES+E-M2.55	Ölflex Classic 110	3	2	1,0			
=ES+E-WRM2.56	=ES+S-T2.56	=ES+E-M2.56	Ölflex Classic 110	3	2	1,0			
=ES+E-WRM2.57	=ES+S-T2.57	=ES+E-M2.57	Ölflex Classic 110	3	2	1,0			
=ES+E-WRM2.58	=ES+S-T2.58	=ES+E-M2.58	Ölflex Classic 110	3	2	1,0			
=ES+E-WRM2.59	=ES+S-T2.59	=ES+E-M2.59	Ölflex Classic 110	3	2	1,0			
=ES+E-WRM2.60	=ES+S-T2.60	=ES+E-M2.60	Ölflex Classic 110	3	2	1,0			
=ES+E-WRM2.61	=ES+S-T2.61	=ES+E-M2.61	Ölflex Classic 110	3	2	1,0			
=ES+E-WRM2.62	=ES+S-T2.62	=ES+E-M2.62	Ölflex Classic 110	3	2	1,0			

Cable overview

F10_001

Cable name	Source (from)	Target (to)	Cable type	all conductors	Conductors used	Cross-section [mm]	Length [m]	Remark	Graphical page of cable diagram
=ES+E-WRM2.63	=ES+S-T2.63	=ES+E-M2.63	Ölflex Classic 110	3	2	1,0			
=ES+E-WRM31	=ES+S-X1	=ES+E-M31	Ölflex-140 CY	3	3	0,75			
=ES+E-WSN2	=ES+S-X3	=ES+S-SE29.0	Ölflex Classic 110	12	18	1,0			
	=ES+S-X4	=ES+S-PA25.0							
	=ES+S-X5	=ES+S-PA25.1							
	=ES+S-AVW	=ES+S-SN2							
		=ES+S-SSE							
		=ES+S-PSE							
		=ES+S-SE12.0							
=ES+E-WT7	=ES+S-X1	=ES+E-T7	Ölflex Classic 110	3	3	1,5			
=ES+E-WXBE336	=ES+S-X3	=ES+E-XBE336	Unitronic Li2YCY (TP)	8	5	0,34			
=ES+E-WXBE400	=ES+S-X3	=ES+E-XBE400	Unitronic Li2YCY (TP)	8	5	0,34			
=ES+E-WXBM1.1	=ES+E-XBM1.1	=ES+S-T1.1	Unitronic Li2YCY (TP)	8	6	0,34			
=ES+E-WXBM1.2	=ES+E-XBM1.2	=ES+S-T1.2	Unitronic Li2YCY (TP)	8	6	0,34			
=ES+E-WXBM1.3	=ES+E-XBM1.3	=ES+S-T1.3	Unitronic Li2YCY (TP)	8	6	0,34			
=ES+E-WXBM1.4	=ES+E-XBM1.4	=ES+S-T1.4	Unitronic Li2YCY (TP)	8	6	0,34			
=ES+E-WXBM1.5	=ES+E-XBM1.5	=ES+S-T1.5	Unitronic Li2YCY (TP)	8	6	0,34			
=ES+E-WXBM1.6	=ES+E-XBM1.6	=ES+S-T1.6	Unitronic Li2YCY (TP)	8	6	0,34			
=ES+E-WXBM1.7	=ES+E-XBM1.7	=ES+S-T1.7	Unitronic Li2YCY (TP)	8	6	0,34			
=ES+E-WXBM1.8	=ES+E-XBM1.8	=ES+S-T1.8	Unitronic Li2YCY (TP)	8	6	0,34			
=ES+E-WXBM1.9	=ES+E-XBM1.9	=ES+S-T1.9	Unitronic Li2YCY (TP)	8	6	0,34			
=ES+E-WXBM1.10	=ES+E-XBM1.10	=ES+S-T1.10	Unitronic Li2YCY (TP)	8	6	0,34			
=ES+E-WXBM1.11	=ES+E-XBM1.11	=ES+S-T1.11	Unitronic Li2YCY (TP)	8	6	0,34			
=ES+E-WXBM1.12	=ES+E-XBM1.12	=ES+S-T1.12	Unitronic Li2YCY (TP)	8	6	0,34			
=ES+E-WXBM1.13	=ES+E-XBM1.13	=ES+S-T1.13	Unitronic Li2YCY (TP)	8	6	0,34			
=ES+E-WXBM1.14	=ES+E-XBM1.14	=ES+S-T1.14	Unitronic Li2YCY (TP)	8	6	0,34			
=ES+E-WXBM1.15	=ES+E-XBM1.15	=ES+S-T1.15	Unitronic Li2YCY (TP)	8	6	0,34			
=ES+E-WXBM1.16	=ES+E-XBM1.16	=ES+S-T1.16	Unitronic Li2YCY (TP)	8	6	0,34			
=ES+E-WXBM1.17	=ES+E-XBM1.17	=ES+S-T1.17	Unitronic Li2YCY (TP)	8	6	0,34			
=ES+E-WXBM1.18	=ES+E-XBM1.18	=ES+S-T1.18	Unitronic Li2YCY (TP)	8	6	0,34			
=ES+E-WXBM1.19	=ES+E-XBM1.19	=ES+S-T1.19	Unitronic Li2YCY (TP)	8	6	0,34			
=ES+E-WXBM1.20	=ES+E-XBM1.20	=ES+S-T1.20	Unitronic Li2YCY (TP)	8	6	0,34			
=ES+E-WXBM1.21	=ES+E-XBM1.21	=ES+S-T1.21	Unitronic Li2YCY (TP)	8	6	0,34			
=ES+E-WXBM1.22	=ES+E-XBM1.22	=ES+S-T1.22	Unitronic Li2YCY (TP)	8	6	0,34			
=ES+E-WXBM1.23	=ES+E-XBM1.23	=ES+S-T1.23	Unitronic Li2YCY (TP)	8	6	0,34			
=ES+E-WXBM1.24	=ES+E-XBM1.24	=ES+S-T1.24	Unitronic Li2YCY (TP)	8	6	0,34			
=ES+E-WXBM1.25	=ES+E-XBM1.25	=ES+S-T1.25	Unitronic Li2YCY (TP)	8	6	0,34			
=ES+E-WXBM1.26	=ES+E-XBM1.26	=ES+S-T1.26	Unitronic Li2YCY (TP)	8	6	0,34			
=ES+E-WXBM1.27	=ES+E-XBM1.27	=ES+S-T1.27	Unitronic Li2YCY (TP)	8	6	0,34			
=ES+E-WXBM1.28	=ES+E-XBM1.28	=ES+S-T1.28	Unitronic Li2YCY (TP)	8	6	0,34			
=ES+E-WXBM1.29	=ES+E-XBM1.29	=ES+S-T1.29	Unitronic Li2YCY (TP)	8	6	0,34			
=ES+E-WXBM1.30	=ES+E-XBM1.30	=ES+S-T1.30	Unitronic Li2YCY (TP)	8	6	0,34			
=ES+E-WXBM1.31	=ES+E-XBM1.31	=ES+S-T1.31	Unitronic Li2YCY (TP)	8	6	0,34			
=ES+E-WXBM1.32	=ES+E-XBM1.32	=ES+S-T1.32	Unitronic Li2YCY (TP)	8	6	0,34			
=ES+E-WXBM1.33	=ES+E-XBM1.33	=ES+S-T1.33	Unitronic Li2YCY (TP)	8	6	0,34			

Cable overview

F10_001

Cable name	Source (from)	Target (to)	Cable type	all conductors	Conductors used	Cross-section [mm]	Length [m]	Remark	Graphical page of cable diagram
=ES+E-WXBM1.34	=ES+E-XBM1.34	=ES+S-T1.34	Unitronic Li2YCY (TP)	8	6	0,34			
=ES+E-WXBM1.35	=ES+E-XBM1.35	=ES+S-T1.35	Unitronic Li2YCY (TP)	8	6	0,34			
=ES+E-WXBM1.36	=ES+E-XBM1.36	=ES+S-T1.36	Unitronic Li2YCY (TP)	8	6	0,34			
=ES+E-WXBM1.37	=ES+E-XBM1.37	=ES+S-T1.37	Unitronic Li2YCY (TP)	8	6	0,34			
=ES+E-WXBM1.38	=ES+E-XBM1.38	=ES+S-T1.38	Unitronic Li2YCY (TP)	8	6	0,34			
=ES+E-WXBM1.39	=ES+E-XBM1.39	=ES+S-T1.39	Unitronic Li2YCY (TP)	8	6	0,34			
=ES+E-WXBM1.40	=ES+E-XBM1.40	=ES+S-T1.40	Unitronic Li2YCY (TP)	8	6	0,34			
=ES+E-WXBM1.41	=ES+E-XBM1.41	=ES+S-T1.41	Unitronic Li2YCY (TP)	8	6	0,34			
=ES+E-WXBM1.42	=ES+E-XBM1.42	=ES+S-T1.42	Unitronic Li2YCY (TP)	8	6	0,34			
=ES+E-WXBM1.43	=ES+E-XBM1.43	=ES+S-T1.43	Unitronic Li2YCY (TP)	8	6	0,34			
=ES+E-WXBM1.44	=ES+E-XBM1.44	=ES+S-T1.44	Unitronic Li2YCY (TP)	8	6	0,34			
=ES+E-WXBM1.45	=ES+E-XBM1.45	=ES+S-T1.45	Unitronic Li2YCY (TP)	8	6	0,34			
=ES+E-WXBM1.46	=ES+E-XBM1.46	=ES+S-T1.46	Unitronic Li2YCY (TP)	8	6	0,34			
=ES+E-WXBM1.47	=ES+E-XBM1.47	=ES+S-T1.47	Unitronic Li2YCY (TP)	8	6	0,34			
=ES+E-WXBM1.48	=ES+E-XBM1.48	=ES+S-T1.48	Unitronic Li2YCY (TP)	8	6	0,34			
=ES+E-WXBM1.49	=ES+E-XBM1.49	=ES+S-T1.49	Unitronic Li2YCY (TP)	8	6	0,34			
=ES+E-WXBM1.50	=ES+E-XBM1.50	=ES+S-T1.50	Unitronic Li2YCY (TP)	8	6	0,34			
=ES+E-WXBM1.51	=ES+E-XBM1.51	=ES+S-T1.51	Unitronic Li2YCY (TP)	8	6	0,34			
=ES+E-WXBM1.52	=ES+E-XBM1.52	=ES+S-T1.52	Unitronic Li2YCY (TP)	8	6	0,34			
=ES+E-WXBM1.53	=ES+E-XBM1.53	=ES+S-T1.53	Unitronic Li2YCY (TP)	8	6	0,34			
=ES+E-WXBM1.54	=ES+E-XBM1.54	=ES+S-T1.54	Unitronic Li2YCY (TP)	8	6	0,34			
=ES+E-WXBM1.55	=ES+E-XBM1.55	=ES+S-T1.55	Unitronic Li2YCY (TP)	8	6	0,34			
=ES+E-WXBM1.56	=ES+E-XBM1.56	=ES+S-T1.56	Unitronic Li2YCY (TP)	8	6	0,34			
=ES+E-WXBM1.57	=ES+E-XBM1.57	=ES+S-T1.57	Unitronic Li2YCY (TP)	8	6	0,34			
=ES+E-WXBM1.58	=ES+E-XBM1.58	=ES+S-T1.58	Unitronic Li2YCY (TP)	8	6	0,34			
=ES+E-WXBM1.59	=ES+E-XBM1.59	=ES+S-T1.59	Unitronic Li2YCY (TP)	8	6	0,34			
=ES+E-WXBM1.60	=ES+E-XBM1.60	=ES+S-T1.60	Unitronic Li2YCY (TP)	8	6	0,34			
=ES+E-WXBM1.61	=ES+E-XBM1.61	=ES+S-T1.61	Unitronic Li2YCY (TP)	8	6	0,34			
=ES+E-WXBM1.62	=ES+E-XBM1.62	=ES+S-T1.62	Unitronic Li2YCY (TP)	8	6	0,34			
=ES+E-WXBM1.63	=ES+E-XBM1.63	=ES+S-T1.63	Unitronic Li2YCY (TP)	8	6	0,34			
=ES+E-WXBM1.64	=ES+E-XBM1.64	=ES+S-T1.64	Unitronic Li2YCY (TP)	8	6	0,34			
=ES+E-WXBM1.65	=ES+E-XBM1.65	=ES+S-T1.65	Unitronic Li2YCY (TP)	8	6	0,34			
=ES+E-WXBM1.66	=ES+E-XBM1.66	=ES+S-T1.66	Unitronic Li2YCY (TP)	8	6	0,34			
=ES+E-WXBM1.67	=ES+E-XBM1.67	=ES+S-T1.67	Unitronic Li2YCY (TP)	8	6	0,34			
=ES+E-WXBM1.68	=ES+E-XBM1.68	=ES+S-T1.68	Unitronic Li2YCY (TP)	8	6	0,34			
=ES+E-WXBM1.69	=ES+E-XBM1.69	=ES+S-T1.69	Unitronic Li2YCY (TP)	8	6	0,34			
=ES+E-WXBM1.70	=ES+E-XBM1.70	=ES+S-T1.70	Unitronic Li2YCY (TP)	8	6	0,34			
=ES+E-WXBM1.71	=ES+E-XBM1.71	=ES+S-T1.71	Unitronic Li2YCY (TP)	8	6	0,34			
=ES+E-WXBM1.72	=ES+E-XBM1.72	=ES+S-T1.72	Unitronic Li2YCY (TP)	8	6	0,34			
=ES+E-WXBM1.73	=ES+E-XBM1.73	=ES+S-T1.73	Unitronic Li2YCY (TP)	8	6	0,34			
=ES+E-WXBM1.74	=ES+E-XBM1.74	=ES+S-T1.74	Unitronic Li2YCY (TP)	8	6	0,34			
=ES+E-WXBM1.75	=ES+E-XBM1.75	=ES+S-T1.75	Unitronic Li2YCY (TP)	8	6	0,34			
=ES+E-WXBM1.76	=ES+E-XBM1.76	=ES+S-T1.76	Unitronic Li2YCY (TP)	8	6	0,34			
=ES+E-WXBM1.77	=ES+E-XBM1.77	=ES+S-T1.77	Unitronic Li2YCY (TP)	8	6	0,34			
=ES+E-WXBM1.78	=ES+E-XBM1.78	=ES+S-T1.78	Unitronic Li2YCY (TP)	8	6	0,34			
=ES+E-WXBM1.79	=ES+E-XBM1.79	=ES+S-T1.79	Unitronic Li2YCY (TP)	8	6	0,34			

Cable overview

F10_001

Cable name	Source (from)	Target (to)	Cable type	all conductors	Conductors used	Cross-section [mm]	Length [m]	Remark	Graphical page of cable diagram
=ES+E-WXBM1.80	=ES+E-XBM1.80	=ES+S-T1.80	Unitronic Li2YCY (TP)	8	6	0,34			
=ES+E-WXBM1.81	=ES+E-XBM1.81	=ES+S-T1.81	Unitronic Li2YCY (TP)	8	6	0,34			
=ES+E-WXBM1.82	=ES+E-XBM1.82	=ES+S-T1.82	Unitronic Li2YCY (TP)	8	6	0,34			
=ES+E-WXBM1.83	=ES+E-XBM1.83	=ES+S-T1.83	Unitronic Li2YCY (TP)	8	6	0,34			
=ES+E-WXBM1.84	=ES+E-XBM1.84	=ES+S-T1.84	Unitronic Li2YCY (TP)	8	6	0,34			
=ES+E-WXBM1.85	=ES+E-XBM1.85	=ES+S-T1.85	Unitronic Li2YCY (TP)	8	6	0,34			
=ES+E-WXBM1.86	=ES+E-XBM1.86	=ES+S-T1.86	Unitronic Li2YCY (TP)	8	6	0,34			
=ES+E-WXBM1.87	=ES+E-XBM1.87	=ES+S-T1.87	Unitronic Li2YCY (TP)	8	6	0,34			
=ES+E-WXBM1.88	=ES+E-XBM1.88	=ES+S-T1.88	Unitronic Li2YCY (TP)	8	6	0,34			
=ES+E-WXBM1.89	=ES+E-XBM1.89	=ES+S-T1.89	Unitronic Li2YCY (TP)	8	6	0,34			
=ES+E-WXBM1.90	=ES+E-XBM1.90	=ES+S-T1.90	Unitronic Li2YCY (TP)	8	6	0,34			
=ES+E-WXBM1.91	=ES+E-XBM1.91	=ES+S-T1.91	Unitronic Li2YCY (TP)	8	6	0,34			
=ES+E-WXBM1.92	=ES+E-XBM1.92	=ES+S-T1.92	Unitronic Li2YCY (TP)	8	6	0,34			
=ES+E-WXBM1.93	=ES+E-XBM1.93	=ES+S-T1.93	Unitronic Li2YCY (TP)	8	6	0,34			
=ES+E-WXBM1.95	=ES+E-XBM1.95	=ES+S-T1.95	Unitronic Li2YCY (TP)	8	6	0,34			
=ES+E-WXBM1.97	=ES+E-XBM1.97	=ES+S-T1.97	Unitronic Li2YCY (TP)	8	6	0,34			
=ES+E-WXBM1.99	=ES+E-XBM1.99	=ES+S-T1.99	Unitronic Li2YCY (TP)	8	6	0,34			
=ES+E-WXBM1.101	=ES+E-XBM1.101	=ES+S-T1.101	Unitronic Li2YCY (TP)	8	6	0,34			
=ES+E-WXBM1.102	=ES+E-XBM1.102	=ES+S-T1.102	Unitronic Li2YCY (TP)	8	6	0,34			
=ES+E-WXBM2.1	=ES+E-XBM2.1	=ES+S-T2.1	Unitronic Li2YCY (TP)	8	6	0,34			
=ES+E-WXBM2.2	=ES+E-XBM2.2	=ES+S-T2.2	Unitronic Li2YCY (TP)	8	6	0,34			
=ES+E-WXBM2.3	=ES+E-XBM2.3	=ES+S-T2.3	Unitronic Li2YCY (TP)	8	6	0,34			
=ES+E-WXBM2.4	=ES+E-XBM2.4	=ES+S-T2.4	Unitronic Li2YCY (TP)	8	6	0,34			
=ES+E-WXBM2.5	=ES+E-XBM2.5	=ES+S-T2.5	Unitronic Li2YCY (TP)	8	6	0,34			
=ES+E-WXBM2.6	=ES+E-XBM2.6	=ES+S-T2.6	Unitronic Li2YCY (TP)	8	6	0,34			
=ES+E-WXBM2.7	=ES+E-XBM2.7	=ES+S-T2.7	Unitronic Li2YCY (TP)	8	6	0,34			
=ES+E-WXBM2.8	=ES+E-XBM2.8	=ES+S-T2.8	Unitronic Li2YCY (TP)	8	6	0,34			
=ES+E-WXBM2.9	=ES+E-XBM2.9	=ES+S-T2.9	Unitronic Li2YCY (TP)	8	6	0,34			
=ES+E-WXBM2.10	=ES+E-XBM2.10	=ES+S-T2.10	Unitronic Li2YCY (TP)	8	6	0,34			
=ES+E-WXBM2.11	=ES+E-XBM2.11	=ES+S-T2.11	Unitronic Li2YCY (TP)	8	6	0,34			
=ES+E-WXBM2.12	=ES+E-XBM2.12	=ES+S-T2.12	Unitronic Li2YCY (TP)	8	6	0,34			
=ES+E-WXBM2.13	=ES+E-XBM2.13	=ES+S-T2.13	Unitronic Li2YCY (TP)	8	6	0,34			
=ES+E-WXBM2.14	=ES+E-XBM2.14	=ES+S-T2.14	Unitronic Li2YCY (TP)	8	6	0,34			
=ES+E-WXBM2.15	=ES+E-XBM2.15	=ES+S-T2.15	Unitronic Li2YCY (TP)	8	6	0,34			
=ES+E-WXBM2.16	=ES+E-XBM2.16	=ES+S-T2.16	Unitronic Li2YCY (TP)	8	6	0,34			
=ES+E-WXBM2.17	=ES+E-XBM2.17	=ES+S-T2.17	Unitronic Li2YCY (TP)	8	6	0,34			
=ES+E-WXBM2.18	=ES+E-XBM2.18	=ES+S-T2.18	Unitronic Li2YCY (TP)	8	6	0,34			
=ES+E-WXBM2.19	=ES+E-XBM2.19	=ES+S-T2.19	Unitronic Li2YCY (TP)	8	6	0,34			
=ES+E-WXBM2.20	=ES+E-XBM2.20	=ES+S-T2.20	Unitronic Li2YCY (TP)	8	6	0,34			
=ES+E-WXBM2.21	=ES+E-XBM2.21	=ES+S-T2.21	Unitronic Li2YCY (TP)	8	6	0,34			
=ES+E-WXBM2.22	=ES+E-XBM2.22	=ES+S-T2.22	Unitronic Li2YCY (TP)	8	6	0,34			
=ES+E-WXBM2.23	=ES+E-XBM2.23	=ES+S-T2.23	Unitronic Li2YCY (TP)	8	6	0,34			
=ES+E-WXBM2.24	=ES+E-XBM2.24	=ES+S-T2.24	Unitronic Li2YCY (TP)	8	6	0,34			
=ES+E-WXBM2.25	=ES+E-XBM2.25	=ES+S-T2.25	Unitronic Li2YCY (TP)	8	6	0,34			
=ES+E-WXBM2.26	=ES+E-XBM2.26	=ES+S-T2.26	Unitronic Li2YCY (TP)	8	6	0,34			
=ES+E-WXBM2.27	=ES+E-XBM2.27	=ES+S-T2.27	Unitronic Li2YCY (TP)	8	6	0,34			

Cable overview

F10_001

Cable name	Source (from)	Target (to)	Cable type	all conductors	Conductors used	Cross-section [mm]	Length [m]	Remark	Graphical page of cable diagram
=ES+E-WXBM2.28	=ES+E-XBM2.28	=ES+S-T2.28	Unitronic Li2YCY (TP)	8	6	0,34			
=ES+E-WXBM2.29	=ES+E-XBM2.29	=ES+S-T2.29	Unitronic Li2YCY (TP)	8	6	0,34			
=ES+E-WXBM2.30	=ES+E-XBM2.30	=ES+S-T2.30	Unitronic Li2YCY (TP)	8	6	0,34			
=ES+E-WXBM2.31	=ES+E-XBM2.31	=ES+S-T2.31	Unitronic Li2YCY (TP)	8	6	0,34			
=ES+E-WXBM2.32	=ES+E-XBM2.32	=ES+S-T2.32	Unitronic Li2YCY (TP)	8	6	0,34			
=ES+E-WXBM2.33	=ES+E-XBM2.33	=ES+S-T2.33	Unitronic Li2YCY (TP)	8	6	0,34			
=ES+E-WXBM2.34	=ES+E-XBM2.34	=ES+S-T2.34	Unitronic Li2YCY (TP)	8	6	0,34			
=ES+E-WXBM2.35	=ES+E-XBM2.35	=ES+S-T2.35	Unitronic Li2YCY (TP)	8	6	0,34			
=ES+E-WXBM2.36	=ES+E-XBM2.36	=ES+S-T2.36	Unitronic Li2YCY (TP)	8	6	0,34			
=ES+E-WXBM2.37	=ES+E-XBM2.37	=ES+S-T2.37	Unitronic Li2YCY (TP)	8	6	0,34			
=ES+E-WXBM2.38	=ES+E-XBM2.38	=ES+S-T2.38	Unitronic Li2YCY (TP)	8	6	0,34			
=ES+E-WXBM2.39	=ES+E-XBM2.39	=ES+S-T2.39	Unitronic Li2YCY (TP)	8	6	0,34			
=ES+E-WXBM2.40	=ES+E-XBM2.40	=ES+S-T2.40	Unitronic Li2YCY (TP)	8	6	0,34			
=ES+E-WXBM2.41	=ES+E-XBM2.41	=ES+S-T2.41	Unitronic Li2YCY (TP)	8	6	0,34			
=ES+E-WXBM2.42	=ES+E-XBM2.42	=ES+S-T2.42	Unitronic Li2YCY (TP)	8	6	0,34			
=ES+E-WXBM2.43	=ES+E-XBM2.43	=ES+S-T2.43	Unitronic Li2YCY (TP)	8	6	0,34			
=ES+E-WXBM2.44	=ES+E-XBM2.44	=ES+S-T2.44	Unitronic Li2YCY (TP)	8	6	0,34			
=ES+E-WXBM2.45	=ES+E-XBM2.45	=ES+S-T2.45	Unitronic Li2YCY (TP)	8	6	0,34			
=ES+E-WXBM2.46	=ES+E-XBM2.46	=ES+S-T2.46	Unitronic Li2YCY (TP)	8	6	0,34			
=ES+E-WXBM2.47	=ES+E-XBM2.47	=ES+S-T2.47	Unitronic Li2YCY (TP)	8	6	0,34			
=ES+E-WXBM2.48	=ES+E-XBM2.48	=ES+S-T2.48	Unitronic Li2YCY (TP)	8	6	0,34			
=ES+E-WXBM2.49	=ES+E-XBM2.49	=ES+S-T2.49	Unitronic Li2YCY (TP)	8	6	0,34			
=ES+E-WXBM2.50	=ES+E-XBM2.50	=ES+S-T2.50	Unitronic Li2YCY (TP)	8	6	0,34			
=ES+E-WXBM2.51	=ES+E-XBM2.51	=ES+S-T2.51	Unitronic Li2YCY (TP)	8	6	0,34			
=ES+E-WXBM2.52	=ES+E-XBM2.52	=ES+S-T2.52	Unitronic Li2YCY (TP)	8	6	0,34			
=ES+E-WXBM2.53	=ES+E-XBM2.53	=ES+S-T2.53	Unitronic Li2YCY (TP)	8	6	0,34			
=ES+E-WXBM2.54	=ES+E-XBM2.54	=ES+S-T2.54	Unitronic Li2YCY (TP)	8	6	0,34			
=ES+E-WXBM2.55	=ES+E-XBM2.55	=ES+S-T2.55	Unitronic Li2YCY (TP)	8	6	0,34			
=ES+E-WXBM2.56	=ES+E-XBM2.56	=ES+S-T2.56	Unitronic Li2YCY (TP)	8	6	0,34			
=ES+E-WXBM2.57	=ES+E-XBM2.57	=ES+S-T2.57	Unitronic Li2YCY (TP)	8	6	0,34			
=ES+E-WXBM2.58	=ES+E-XBM2.58	=ES+S-T2.58	Unitronic Li2YCY (TP)	8	6	0,34			
=ES+E-WXBM2.59	=ES+E-XBM2.59	=ES+S-T2.59	Unitronic Li2YCY (TP)	8	6	0,34			
=ES+E-WXBM2.60	=ES+E-XBM2.60	=ES+S-T2.60	Unitronic Li2YCY (TP)	8	6	0,34			
=ES+E-WXBM2.61	=ES+E-XBM2.61	=ES+S-T2.61	Unitronic Li2YCY (TP)	8	6	0,34			
=ES+E-WXBM2.62	=ES+E-XBM2.62	=ES+S-T2.62	Unitronic Li2YCY (TP)	8	6	0,34			
=ES+E-WXBM2.63	=ES+E-XBM2.63	=ES+S-T2.63	Unitronic Li2YCY (TP)	8	6	0,34			
=ES+E-WXCB1	=ES+S-X5	=ES+S-XCB1	Ölflex Classic 110	12	10	1,0			
=ES+E-WYM3.51	=ES+S-X1	=ES+S-QEM3.5	Ölflex Classic 110	3	2	1,5			
=ES+E-WYM3.52	=ES+S-QEM3.5	=ES+E-YM3.5	Ölflex Classic 110	3	2	1,5			
=ES+E-WYM8.41	=ES+S-X1	=ES+S-QEM8.4	Ölflex Classic 110	3	2	1,5			
=ES+E-WYM8.42	=ES+S-QEM8.4	=ES+E-VYM8.4	Ölflex Classic 110	3	2	1,5			
=ES+E-WYM8.43	=ES+S-X1	=ES+E-VYM8.4	Ölflex Classic 110	3	2	1,5			

Parts list

electrical construction

Artilelstückliste_Elo_SAP_001

DT	Part number new	Part number old	Quantity	Placement	Designation 1	Designation 2	Order number	Manufacturer
A0	200011320	ESIZ0062	1	=ES+S/221.1	tele service	TS - Adapter II	6ES7972-0CB35-0XA0	Siemens
A0	200010310	ESIA7024	1	=ES+S/221.1	Profibus plug	90° / bis 12 MBit/s	6ES 7972-0BB50-0XA0	Siemens
A32.3	200007024	EJUA0022	1	=ES+S/208.7	Safety temperature limiter	230 V AC Pt100	0253-001-02/205,245,056	Jumo
AE2	200031229	EHPA0002	1	=ES+S/220.1	Ethernet Switch		646162	HP
AE76.1	200029534	ERHA9003	1	=ES+S/361.6	isolation amplifier	24 VDC	N 00017	Rechner
AE76.4_5	200029534	ERHA9003	1	=ES+S/361.1	isolation amplifier	24 VDC	N 00017	Rechner
AE76.6_7	200029534	ERHA9003	1	=ES+S/361.3	isolation amplifier	24 VDC	N 00017	Rechner
AMP	200010475	ESIA7422	1	=ES+S/262.4	Mobile Panel 177	über Anschlußbox	6AV6645-0AC01-0AX0	Siemens
AMP	200010354	ESIA7089	1	=ES+S/262.4	flex	für Mobiles Panel	6XV 1440-4AN20	Siemens
AMP	200010335	ESIA7049	1	=ES+S/262.4	support	für Mobiles Panel	6AV 6574-1AF04-4AA0	Siemens
AVW	200011984	ESTA4009	1	=ES+S/275.4	thermostat	24 V AC/DC -80...600 °C	XT121C-1C0TU	Dixell
BPNA7	200011064	ESIS3062	1	=AP+BDP/6.1	console	Metallgehäuse gelb	3 SB 3801-2AD3	Siemens
BPNA8	200011064	ESIS3062	1	=AP+BDP/6.1	console	Metallgehäuse gelb	3 SB 3801-2AD3	Siemens
BPNA9	200011064	ESIS3062	1	=AP+BDP/6.1	console	Metallgehäuse gelb	3 SB 3801-2AD3	Siemens
BPT1	200011057	ESIS3051	1	=AP+BDP/8.1	housing	1 Befehlsstelle	3 SB 3801-2AA3	Siemens
BPT2	200011057	ESIS3051	1	=AP+BDP/8.1	housing	1 Befehlsstelle	3 SB 3801-2AA3	Siemens
BPT3	200011057	ESIS3051	1	=AP+BDP/8.1	housing	1 Befehlsstelle	3 SB 3801-2AA3	Siemens
BPT4	200011057	ESIS3051	1	=AP+BDP/8.1	housing	1 Befehlsstelle	3 SB 3801-2AA3	Siemens
EM1		PILZ.787 750	1	=ES+S/266.0				
F1T230	200010561	ESIF0110	1	=ES+S/210.3	Circuit breaker	1 x B10 A	5 SX 2 110-6	Siemens
F1T230	200010553	ESIF0012	1	=ES+S/210.3	auxiliary block	1S / 1Ö	5 SX 9100	Siemens
F1T230.2	200010559	ESIF0106	1	=ES+S/214.3	Circuit breaker	1 x B6 A	5 SX 2 106-6	Siemens
F1T230.2	200010553	ESIF0012	1	=ES+S/214.3	auxiliary block	1S / 1Ö	5 SX 9100	Siemens
F2T230	200010561	ESIF0110	1	=ES+S/212.1	Circuit breaker	1 x B10 A	5 SX 2 110-6	Siemens
F2T230	200010553	ESIF0012	1	=ES+S/212.1	auxiliary block	1S / 1Ö	5 SX 9100	Siemens
F32.1	200010563	ESIF0116	1	=ES+S/208.3	Circuit breaker	1 x B16 A	5 SX 2 116-6	Siemens
F32.1	200010553	ESIF0012	1	=ES+S/208.3	auxiliary block	1S / 1Ö	5 SX 9100	Siemens
F32.2	200010559	ESIF0106	1	=ES+S/208.4	Circuit breaker	1 x B6 A	5 SX 2 106-6	Siemens
F32.2	200010553	ESIF0012	1	=ES+S/208.4	auxiliary block	1S / 1Ö	5 SX 9100	Siemens
FISO0	200010569	ESIF0206	1	=ES+S/1.2	Circuit breaker	2 x B6 A	5 SX 2 206-6	Siemens
FITSA2	200010569	ESIF0206	1	=ES+S/65.8	Circuit breaker	2 x B6 A	5 SX 2 206-6	Siemens
FITSA3	200010569	ESIF0206	1	=ES+S/130.8	Circuit breaker	2 x B6 A	5 SX 2 206-6	Siemens
FITSA4	200010569	ESIF0206	1	=ES+S/194.8	Circuit breaker	2 x B6 A	5 SX 2 206-6	Siemens
FITST1	200010569	ESIF0206	1	=ES+S/215.8	Circuit breaker	2 x B6 A	5 SX 2 206-6	Siemens
FITST2	200010569	ESIF0206	1	=ES+S/217.8	Circuit breaker	2 x B6 A	5 SX 2 206-6	Siemens
FS2	200013281	EWOF1400	1	=ES+S/1.4	load-break switch	NH-Gr. 2 / 400A	33602	Wöhner
FS2	200010679	ESIF6400	3	=ES+S/1.4	fuse	NH 2 / 400A	3 NA 2260	Siemens
FST1.1	200010561	ESIF0110	1	=ES+S/216.0	Circuit breaker	1 x B10 A	5 SX 2 110-6	Siemens

Parts list

electrical construction

Artilelstückliste_Elo_SAP_001

DT	Part number new	Part number old	Quantity	Placement	Designation 1	Designation 2	Order number	Manufacturer
FST1.1	200010553	ESIF0012	1	=ES+S/216.0	auxiliary block	1S / 1Ö	5 SX 9100	Siemens
FST1.3	200010561	ESIF0110	1	=ES+S/216.3	Circuit breaker	1 x B10 A	5 SX 2 110-6	Siemens
FST1.3	200010553	ESIF0012	1	=ES+S/216.3	auxiliary block	1S / 1Ö	5 SX 9100	Siemens
FST1.4	200010561	ESIF0110	1	=ES+S/216.5	Circuit breaker	1 x B10 A	5 SX 2 110-6	Siemens
FST1.4	200010553	ESIF0012	1	=ES+S/216.5	auxiliary block	1S / 1Ö	5 SX 9100	Siemens
FST1.5	200010561	ESIF0110	1	=ES+S/216.6	Circuit breaker	1 x B10 A	5 SX 2 110-6	Siemens
FST1.5	200010553	ESIF0012	1	=ES+S/216.6	auxiliary block	1S / 1Ö	5 SX 9100	Siemens
FST2.1	200010561	ESIF0110	1	=ES+S/218.1	Circuit breaker	1 x B10 A	5 SX 2 110-6	Siemens
FST2.1	200010553	ESIF0012	1	=ES+S/218.1	auxiliary block	1S / 1Ö	5 SX 9100	Siemens
FST2.2	200010559	ESIF0106	1	=ES+S/218.2	Circuit breaker	1 x B6 A	5 SX 2 106-6	Siemens
FST2.3	200010559	ESIF0106	1	=ES+S/218.4	Circuit breaker	1 x B6 A	5 SX 2 106-6	Siemens
FST2.3	200010553	ESIF0012	1	=ES+S/218.4	auxiliary block	1S / 1Ö	5 SX 9100	Siemens
FST2.4	200010559	ESIF0106	1	=ES+S/218.5	Circuit breaker	1 x B6 A	5 SX 2 106-6	Siemens
FST2.4	200010553	ESIF0012	1	=ES+S/218.5	auxiliary block	1S / 1Ö	5 SX 9100	Siemens
FST2.5	200010559	ESIF0106	1	=ES+S/218.7	Circuit breaker	1 x B6 A	5 SX 2 106-6	Siemens
FST2.5	200010553	ESIF0012	1	=ES+S/218.7	auxiliary block	1S / 1Ö	5 SX 9100	Siemens
FST2.6	200010559	ESIF0106	1	=ES+S/218.8	Circuit breaker	1 x B6 A	5 SX 2 106-6	Siemens
FST2.6	200010553	ESIF0012	1	=ES+S/218.8	auxiliary block	1S / 1Ö	5 SX 9100	Siemens
FTSA2.1	200010561	ESIF0110	1	=ES+S/66.0	Circuit breaker	1 x B10 A	5 SX 2 110-6	Siemens
FTSA2.2	200010561	ESIF0110	1	=ES+S/66.3	Circuit breaker	1 x B10 A	5 SX 2 110-6	Siemens
FTSA2.2	200010553	ESIF0012	1	=ES+S/66.3	auxiliary block	1S / 1Ö	5 SX 9100	Siemens
FTSA2.3	200010561	ESIF0110	1	=ES+S/66.5	Circuit breaker	1 x B10 A	5 SX 2 110-6	Siemens
FTSA2.3	200010553	ESIF0012	1	=ES+S/66.5	auxiliary block	1S / 1Ö	5 SX 9100	Siemens
FTSA3.1	200010561	ESIF0110	1	=ES+S/131.0	Circuit breaker	1 x B10 A	5 SX 2 110-6	Siemens
FTSA3.2	200010561	ESIF0110	1	=ES+S/131.3	Circuit breaker	1 x B10 A	5 SX 2 110-6	Siemens
FTSA3.2	200010553	ESIF0012	1	=ES+S/131.3	auxiliary block	1S / 1Ö	5 SX 9100	Siemens
FTSA3.3	200010561	ESIF0110	1	=ES+S/131.5	Circuit breaker	1 x B10 A	5 SX 2 110-6	Siemens
FTSA3.3	200010553	ESIF0012	1	=ES+S/131.5	auxiliary block	1S / 1Ö	5 SX 9100	Siemens
FTSA4.1	200010561	ESIF0110	1	=ES+S/195.0	Circuit breaker	1 x B10 A	5 SX 2 110-6	Siemens
FTSA4.2	200010561	ESIF0110	1	=ES+S/195.3	Circuit breaker	1 x B10 A	5 SX 2 110-6	Siemens
FTSA4.2	200010553	ESIF0012	1	=ES+S/195.3	auxiliary block	1S / 1Ö	5 SX 9100	Siemens
FTSA4.3	200010561	ESIF0110	1	=ES+S/195.5	Circuit breaker	1 x B10 A	5 SX 2 110-6	Siemens
FTSA4.3	200010553	ESIF0012	1	=ES+S/195.5	auxiliary block	1S / 1Ö	5 SX 9100	Siemens
FYM3.5	200010569	ESIF0206	1	=ES+S/196.8	Circuit breaker	2 x B6 A	5 SX 2 206-6	Siemens
FYM3.5	200010553	ESIF0012	1	=ES+S/196.8	auxiliary block	1S / 1Ö	5 SX 9100	Siemens
K0	200010384	ESIA7158	1	=ES+S/221.0	profibus DP/DP coupler	IM 158	6ES 7158-0AD01-0XA0	Siemens
K0	200010310	ESIA7024	1	=ES+S/221.0	Profibus plug	90° / bis 12 MBit/s	6ES 7972-0BB50-0XA0	Siemens
K1	200028447	ESIA7310	1	=ES+S/221.2	CPU	315 - 2 PN/DP / 384 KByte	6ES 7315-2EH14-0AB0	Siemens

Parts list

electrical construction

Artilelstückliste_Elo_SAP_001

DT	Part number new	Part number old	Quantity	Placement	Designation 1	Designation 2	Order number	Manufacturer
K1	200010352	ESIA7082	1	=ES+S/221.2	Micro Memory Card	512 KByte	6ES 7953-8LJ20-0AA0	Siemens
K1	200010290	ESIA7003	1	=ES+S/221.2	profile rail	830 mm	6ES 7390-1AJ30-0AA0	Siemens
K1	200010310	ESIA7024	1	=ES+S/221.2	Profibus plug	90° / bis 12 MBit/s	6ES 7972-0BB50-0XA0	Siemens
K3	200010433	ESIA7321	1	=ES+S/222.0	Digital input	SM 321 / 16E / 24VDC	6ES 7321-1BH02-0AA0	Siemens
K3	200010315	ESIA7029	1	=ES+S/222.0	plug	20 pol. 2,5 m Kabel	6ES 7922-3BC50-5AB0	Siemens
K4	200010434	ESIA7322	1	=ES+S/222.1	Digital output	SM 322 / 16x0,5A / 24VDC	6ES 7322-1BH01-0AA0	Siemens
K4	200010315	ESIA7029	1	=ES+S/222.1	plug	20 pol. 2,5 m Kabel	6ES 7922-3BC50-5AB0	Siemens
K5	200010434	ESIA7322	1	=ES+S/222.2	Digital output	SM 322 / 16x0,5A / 24VDC	6ES 7322-1BH01-0AA0	Siemens
K5	200010315	ESIA7029	1	=ES+S/222.2	plug	20 pol. 2,5 m Kabel	6ES 7922-3BC50-5AB0	Siemens
K6	200010433	ESIA7321	1	=ES+S/222.3	Digital input	SM 321 / 16E / 24VDC	6ES 7321-1BH02-0AA0	Siemens
K6	200010315	ESIA7029	1	=ES+S/222.3	plug	20 pol. 2,5 m Kabel	6ES 7922-3BC50-5AB0	Siemens
K7	200010434	ESIA7322	1	=ES+S/222.4	Digital output	SM 322 / 16x0,5A / 24VDC	6ES 7322-1BH01-0AA0	Siemens
K7	200010315	ESIA7029	1	=ES+S/222.4	plug	20 pol. 2,5 m Kabel	6ES 7922-3BC50-5AB0	Siemens
K8	200010456	ESIA7351	1	=ES+S/222.5	Counter assembly	FM 350-2	6ES 7350-2AH00-0AE0	Siemens
K8	200010306	ESIA7020	1	=ES+S/222.5	plug	40 polig	6ES 7392-1AM00-0AA0	Siemens
K9	200010434	ESIA7322	1	=ES+S/223.1	Digital output	SM 322 / 16x0,5A / 24VDC	6ES 7322-1BH01-0AA0	Siemens
K9	200010315	ESIA7029	1	=ES+S/223.1	plug	20 pol. 2,5 m Kabel	6ES 7922-3BC50-5AB0	Siemens
K10	200010433	ESIA7321	1	=ES+S/223.3	Digital input	SM 321 / 16E / 24VDC	6ES 7321-1BH02-0AA0	Siemens
K10	200010315	ESIA7029	1	=ES+S/223.3	plug	20 pol. 2,5 m Kabel	6ES 7922-3BC50-5AB0	Siemens
K11	200010382	ESIA7153	1	=ES+S/223.0	activation	IM 153-1	6ES7153-1AA03-0XB0	Siemens
K11	200010310	ESIA7024	1	=ES+S/223.0	Profibus plug	90° / bis 12 MBit/s	6ES 7972-0BB50-0XA0	Siemens
K12	200010442	ESIA7331	1	=ES+S/223.4	analog input	SM 331 / 8-Kanal	6ES 7331-7KF02-0AB0	Siemens
K12	200010315	ESIA7029	1	=ES+S/223.4	plug	20 pol. 2,5 m Kabel	6ES 7922-3BC50-5AB0	Siemens
K13	200010455	ESIA7350	1	=ES+S/223.5	Counter assembly	FM 350-1	6ES 7350-1AH03-0AE0	Siemens
K13	200010309	ESIA7023	1	=ES+S/223.5	plug	20 polig	6ES 7392-1AJ00-0AA0	Siemens
K14	200010433	ESIA7321	1	=ES+S/223.6	Digital input	SM 321 / 16E / 24VDC	6ES 7321-1BH02-0AA0	Siemens
K14	200010315	ESIA7029	1	=ES+S/223.6	plug	20 pol. 2,5 m Kabel	6ES 7922-3BC50-5AB0	Siemens
K15	200010434	ESIA7322	1	=ES+S/223.7	Digital output	SM 322 / 16x0,5A / 24VDC	6ES 7322-1BH01-0AA0	Siemens
K15	200010315	ESIA7029	1	=ES+S/223.7	plug	20 pol. 2,5 m Kabel	6ES 7922-3BC50-5AB0	Siemens
K21	200010317	ESIA7030	1	=ES+S/233.1	Profibus Repeater	Profibus - Bussystem	6ES 7972-0AA01-0XA0	Siemens
K22	200010317	ESIA7030	1	=ES+S/240.1	Profibus Repeater	Profibus - Bussystem	6ES 7972-0AA01-0XA0	Siemens
K23	200010317	ESIA7030	1	=ES+S/246.1	Profibus Repeater	Profibus - Bussystem	6ES 7972-0AA01-0XA0	Siemens
K24	200010317	ESIA7030	1	=ES+S/255.1	Profibus Repeater	Profibus - Bussystem	6ES 7972-0AA01-0XA0	Siemens
K25	200010317	ESIA7030	1	=ES+S/261.1	Profibus Repeater	Profibus - Bussystem	6ES 7972-0AA01-0XA0	Siemens
K31	200010384	ESIA7158	1	=ES+S/224.1	profibus DP/DP coupler	IM 158	6ES 7158-0AD01-0XA0	Siemens
K31	200010310	ESIA7024	1	=ES+S/224.1	Profibus plug	90° / bis 12 MBit/s	6ES 7972-0BB50-0XA0	Siemens
K32	200010384	ESIA7158	1	=ES+S/224.2	profibus DP/DP coupler	IM 158	6ES 7158-0AD01-0XA0	Siemens
K32	200010310	ESIA7024	1	=ES+S/224.2	Profibus plug	90° / bis 12 MBit/s	6ES 7972-0BB50-0XA0	Siemens

Parts list

electrical construction

Artilelstückliste_Elo_SAP_001

DT	Part number new	Part number old	Quantity	Placement	Designation 1	Designation 2	Order number	Manufacturer
K33	200010449	ESIA7342	1	=ES+S/222.7	communication module	CP 342-5	6GK 7342-5DA02-0XE0	Siemens
K34	200010449	ESIA7342	1	=ES+S/222.8	communication module	CP 342-5	6GK 7342-5DA02-0XE0	Siemens
K40	200010381	ESIA7152	1	=ES+S/227.0	Module	IM 151-1	6ES 7151-1AA05-0AB0	Siemens
K40.0	200010373	ESIA7139	1	=ES+S/227.1	Power supply	PM-E 24VUC / 230VAC	6ES 7138-4CB10-0AB0	Siemens
K40.0	200010390	ESIA7195	1	=ES+S/227.1	Terminals	TM-P15C23-A0	6ES 7193-4CD30-0AA0	Siemens
K40.1	200029877	ESIA7136	1	=ES+S/227.2	Digital input	4 DI / 24VDC (VE = 5 Stück)	6ES 7131-4BD01-0AA0	Siemens
K40.1	200029887	ESIA7197	1	=ES+S/227.2	Terminals	TM-E15C26-A1	6ES 7193-4CA50-0AA0	Siemens
K40.2	200029877	ESIA7136	1	=ES+S/227.2	Digital input	4 DI / 24VDC (VE = 5 Stück)	6ES 7131-4BD01-0AA0	Siemens
K40.2	200029887	ESIA7197	1	=ES+S/227.2	Terminals	TM-E15C26-A1	6ES 7193-4CA50-0AA0	Siemens
K41.1	200029877	ESIA7136	1	=ES+S/227.2	Digital input	4 DI / 24VDC (VE = 5 Stück)	6ES 7131-4BD01-0AA0	Siemens
K41.1	200029887	ESIA7197	1	=ES+S/227.2	Terminals	TM-E15C26-A1	6ES 7193-4CA50-0AA0	Siemens
K41.2	200029877	ESIA7136	1	=ES+S/227.3	Digital input	4 DI / 24VDC (VE = 5 Stück)	6ES 7131-4BD01-0AA0	Siemens
K41.2	200029887	ESIA7197	1	=ES+S/227.3	Terminals	TM-E15C26-A1	6ES 7193-4CA50-0AA0	Siemens
K42.1	200029877	ESIA7136	1	=ES+S/227.3	Digital input	4 DI / 24VDC (VE = 5 Stück)	6ES 7131-4BD01-0AA0	Siemens
K42.1	200029887	ESIA7197	1	=ES+S/227.3	Terminals	TM-E15C26-A1	6ES 7193-4CA50-0AA0	Siemens
K42.2	200029877	ESIA7136	1	=ES+S/227.3	Digital input	4 DI / 24VDC (VE = 5 Stück)	6ES 7131-4BD01-0AA0	Siemens
K42.2	200029887	ESIA7197	1	=ES+S/227.3	Terminals	TM-E15C26-A1	6ES 7193-4CA50-0AA0	Siemens
K43	200010381	ESIA7152	1	=ES+S/239.0	Module	IM 151-1	6ES 7151-1AA05-0AB0	Siemens
K43.0	200010373	ESIA7139	1	=ES+S/239.1	Power supply	PM-E 24VUC / 230VAC	6ES 7138-4CB10-0AB0	Siemens
K43.0	200010390	ESIA7195	1	=ES+S/239.1	Terminals	TM-P15C23-A0	6ES 7193-4CD30-0AA0	Siemens
K43.1	200029877	ESIA7136	1	=ES+S/239.2	Digital input	4 DI / 24VDC (VE = 5 Stück)	6ES 7131-4BD01-0AA0	Siemens
K43.1	200029887	ESIA7197	1	=ES+S/239.2	Terminals	TM-E15C26-A1	6ES 7193-4CA50-0AA0	Siemens
K43.2	200029877	ESIA7136	1	=ES+S/239.2	Digital input	4 DI / 24VDC (VE = 5 Stück)	6ES 7131-4BD01-0AA0	Siemens
K43.2	200029887	ESIA7197	1	=ES+S/239.2	Terminals	TM-E15C26-A1	6ES 7193-4CA50-0AA0	Siemens
K44.1	200029877	ESIA7136	1	=ES+S/239.2	Digital input	4 DI / 24VDC (VE = 5 Stück)	6ES 7131-4BD01-0AA0	Siemens
K44.1	200029887	ESIA7197	1	=ES+S/239.2	Terminals	TM-E15C26-A1	6ES 7193-4CA50-0AA0	Siemens
K44.2	200029877	ESIA7136	1	=ES+S/239.3	Digital input	4 DI / 24VDC (VE = 5 Stück)	6ES 7131-4BD01-0AA0	Siemens
K44.2	200029887	ESIA7197	1	=ES+S/239.3	Terminals	TM-E15C26-A1	6ES 7193-4CA50-0AA0	Siemens
K45.1	200029877	ESIA7136	1	=ES+S/239.3	Digital input	4 DI / 24VDC (VE = 5 Stück)	6ES 7131-4BD01-0AA0	Siemens
K45.1	200029887	ESIA7197	1	=ES+S/239.3	Terminals	TM-E15C26-A1	6ES 7193-4CA50-0AA0	Siemens
K45.2	200029877	ESIA7136	1	=ES+S/239.3	Digital input	4 DI / 24VDC (VE = 5 Stück)	6ES 7131-4BD01-0AA0	Siemens
K45.2	200029887	ESIA7197	1	=ES+S/239.3	Terminals	TM-E15C26-A1	6ES 7193-4CA50-0AA0	Siemens
K46	200010381	ESIA7152	1	=ES+S/251.0	Module	IM 151-1	6ES 7151-1AA05-0AB0	Siemens
K46.0	200010373	ESIA7139	1	=ES+S/251.1	Power supply	PM-E 24VUC / 230VAC	6ES 7138-4CB10-0AB0	Siemens
K46.0	200010390	ESIA7195	1	=ES+S/251.1	Terminals	TM-P15C23-A0	6ES 7193-4CD30-0AA0	Siemens
K46.1	200029877	ESIA7136	1	=ES+S/251.2	Digital input	4 DI / 24VDC (VE = 5 Stück)	6ES 7131-4BD01-0AA0	Siemens
K46.1	200029887	ESIA7197	1	=ES+S/251.2	Terminals	TM-E15C26-A1	6ES 7193-4CA50-0AA0	Siemens
K46.2	200029877	ESIA7136	1	=ES+S/251.2	Digital input	4 DI / 24VDC (VE = 5 Stück)	6ES 7131-4BD01-0AA0	Siemens

Parts list

electrical construction

Artilelstückliste_Elo_SAP_001

DT	Part number new	Part number old	Quantity	Placement	Designation 1	Designation 2	Order number	Manufacturer
K46.2	200029887	ESIA7197	1	=ES+S/251.2	Terminals	TM-E15C26-A1	6ES 7193-4CA50-0AA0	Siemens
K47.1	200029877	ESIA7136	1	=ES+S/251.2	Digital input	4 DI / 24VDC (VE = 5 Stück)	6ES 7131-4BD01-0AA0	Siemens
K47.1	200029887	ESIA7197	1	=ES+S/251.2	Terminals	TM-E15C26-A1	6ES 7193-4CA50-0AA0	Siemens
K47.2	200029877	ESIA7136	1	=ES+S/251.3	Digital input	4 DI / 24VDC (VE = 5 Stück)	6ES 7131-4BD01-0AA0	Siemens
K47.2	200029887	ESIA7197	1	=ES+S/251.3	Terminals	TM-E15C26-A1	6ES 7193-4CA50-0AA0	Siemens
K48.1	200029877	ESIA7136	1	=ES+S/251.3	Digital input	4 DI / 24VDC (VE = 5 Stück)	6ES 7131-4BD01-0AA0	Siemens
K48.1	200029887	ESIA7197	1	=ES+S/251.3	Terminals	TM-E15C26-A1	6ES 7193-4CA50-0AA0	Siemens
K48.2	200029877	ESIA7136	1	=ES+S/251.3	Digital input	4 DI / 24VDC (VE = 5 Stück)	6ES 7131-4BD01-0AA0	Siemens
K48.2	200029887	ESIA7197	1	=ES+S/251.3	Terminals	TM-E15C26-A1	6ES 7193-4CA50-0AA0	Siemens
K60	200010381	ESIA7152	1	=ES+S/336.0	Module	IM 151-1	6ES 7151-1AA05-0AB0	Siemens
K60.0	200010373	ESIA7139	1	=ES+S/336.2	Power supply	PM-E 24VUC / 230VAC	6ES 7138-4CB10-0AB0	Siemens
K60.0	200010390	ESIA7195	1	=ES+S/336.2	Terminals	TM-P15C23-A0	6ES 7193-4CD30-0AA0	Siemens
K60.1	200029886	ESIA7137	1	=ES+S/336.2	Digital output	4 DO / 24VDC/0,5A (VE = 5 Stück)	6ES 7132-4BD01-0AA0	Siemens
K60.1	200029887	ESIA7197	1	=ES+S/336.2	Terminals	TM-E15C26-A1	6ES 7193-4CA50-0AA0	Siemens
K60.2	200029886	ESIA7137	1	=ES+S/336.2	Digital output	4 DO / 24VDC/0,5A (VE = 5 Stück)	6ES 7132-4BD01-0AA0	Siemens
K60.2	200029887	ESIA7197	1	=ES+S/336.2	Terminals	TM-E15C26-A1	6ES 7193-4CA50-0AA0	Siemens
K61.1	200029886	ESIA7137	1	=ES+S/336.3	Digital output	4 DO / 24VDC/0,5A (VE = 5 Stück)	6ES 7132-4BD01-0AA0	Siemens
K61.1	200029887	ESIA7197	1	=ES+S/336.3	Terminals	TM-E15C26-A1	6ES 7193-4CA50-0AA0	Siemens
K61.2	200029886	ESIA7137	1	=ES+S/336.3	Digital output	4 DO / 24VDC/0,5A (VE = 5 Stück)	6ES 7132-4BD01-0AA0	Siemens
K61.2	200029887	ESIA7197	1	=ES+S/336.3	Terminals	TM-E15C26-A1	6ES 7193-4CA50-0AA0	Siemens
K62.1	200029886	ESIA7137	1	=ES+S/336.3	Digital output	4 DO / 24VDC/0,5A (VE = 5 Stück)	6ES 7132-4BD01-0AA0	Siemens
K62.1	200029887	ESIA7197	1	=ES+S/336.3	Terminals	TM-E15C26-A1	6ES 7193-4CA50-0AA0	Siemens
K62.2	200029886	ESIA7137	1	=ES+S/336.4	Digital output	4 DO / 24VDC/0,5A (VE = 5 Stück)	6ES 7132-4BD01-0AA0	Siemens
K62.2	200029887	ESIA7197	1	=ES+S/336.4	Terminals	TM-E15C26-A1	6ES 7193-4CA50-0AA0	Siemens
K63.0	200010373	ESIA7139	1	=ES+S/336.4	Power supply	PM-E 24VUC / 230VAC	6ES 7138-4CB10-0AB0	Siemens
K63.0	200010390	ESIA7195	1	=ES+S/336.4	Terminals	TM-P15C23-A0	6ES 7193-4CD30-0AA0	Siemens
K63.1	200029877	ESIA7136	1	=ES+S/336.5	Digital input	4 DI / 24VDC (VE = 5 Stück)	6ES 7131-4BD01-0AA0	Siemens
K63.1	200029887	ESIA7197	1	=ES+S/336.5	Terminals	TM-E15C26-A1	6ES 7193-4CA50-0AA0	Siemens
K63.2	200029877	ESIA7136	1	=ES+S/336.5	Digital input	4 DI / 24VDC (VE = 5 Stück)	6ES 7131-4BD01-0AA0	Siemens
K63.2	200029887	ESIA7197	1	=ES+S/336.5	Terminals	TM-E15C26-A1	6ES 7193-4CA50-0AA0	Siemens
K70	200010381	ESIA7152	1	=ES+S/345.0	Module	IM 151-1	6ES 7151-1AA05-0AB0	Siemens
K70.0	200010373	ESIA7139	1	=ES+S/345.2	Power supply	PM-E 24VUC / 230VAC	6ES 7138-4CB10-0AB0	Siemens
K70.0	200010390	ESIA7195	1	=ES+S/345.2	Terminals	TM-P15C23-A0	6ES 7193-4CD30-0AA0	Siemens
K70.1	200029877	ESIA7136	1	=ES+S/345.2	Digital input	4 DI / 24VDC (VE = 5 Stück)	6ES 7131-4BD01-0AA0	Siemens
K70.1	200029887	ESIA7197	1	=ES+S/345.2	Terminals	TM-E15C26-A1	6ES 7193-4CA50-0AA0	Siemens
K70.2	200029877	ESIA7136	1	=ES+S/345.2	Digital input	4 DI / 24VDC (VE = 5 Stück)	6ES 7131-4BD01-0AA0	Siemens
K70.2	200029887	ESIA7197	1	=ES+S/345.2	Terminals	TM-E15C26-A1	6ES 7193-4CA50-0AA0	Siemens
K71.1	200029877	ESIA7136	1	=ES+S/345.3	Digital input	4 DI / 24VDC (VE = 5 Stück)	6ES 7131-4BD01-0AA0	Siemens

Parts list

electrical construction

Artilelstückliste_Elo_SAP_001

DT	Part number new	Part number old	Quantity	Placement	Designation 1	Designation 2	Order number	Manufacturer
K71.1	200029887	ESIA7197	1	=ES+S/345.3	Terminals	TM-E15C26-A1	6ES 7193-4CA50-0AA0	Siemens
K71.2	200029877	ESIA7136	1	=ES+S/345.3	Digital input	4 DI / 24VDC (VE = 5 Stück)	6ES 7131-4BD01-0AA0	Siemens
K71.2	200029887	ESIA7197	1	=ES+S/345.3	Terminals	TM-E15C26-A1	6ES 7193-4CA50-0AA0	Siemens
K72.1	200029877	ESIA7136	1	=ES+S/345.3	Digital input	4 DI / 24VDC (VE = 5 Stück)	6ES 7131-4BD01-0AA0	Siemens
K72.1	200029887	ESIA7197	1	=ES+S/345.3	Terminals	TM-E15C26-A1	6ES 7193-4CA50-0AA0	Siemens
K72.2	200029877	ESIA7136	1	=ES+S/345.4	Digital input	4 DI / 24VDC (VE = 5 Stück)	6ES 7131-4BD01-0AA0	Siemens
K72.2	200029887	ESIA7197	1	=ES+S/345.4	Terminals	TM-E15C26-A1	6ES 7193-4CA50-0AA0	Siemens
K73.1	200029877	ESIA7136	1	=ES+S/345.4	Digital input	4 DI / 24VDC (VE = 5 Stück)	6ES 7131-4BD01-0AA0	Siemens
K73.1	200029887	ESIA7197	1	=ES+S/345.4	Terminals	TM-E15C26-A1	6ES 7193-4CA50-0AA0	Siemens
K73.2	200029877	ESIA7136	1	=ES+S/345.5	Digital input	4 DI / 24VDC (VE = 5 Stück)	6ES 7131-4BD01-0AA0	Siemens
K73.2	200029887	ESIA7197	1	=ES+S/345.5	Terminals	TM-E15C26-A1	6ES 7193-4CA50-0AA0	Siemens
K74.1	200029877	ESIA7136	1	=ES+S/345.5	Digital input	4 DI / 24VDC (VE = 5 Stück)	6ES 7131-4BD01-0AA0	Siemens
K74.1	200029887	ESIA7197	1	=ES+S/345.5	Terminals	TM-E15C26-A1	6ES 7193-4CA50-0AA0	Siemens
K74.2	200029877	ESIA7136	1	=ES+S/345.5	Digital input	4 DI / 24VDC (VE = 5 Stück)	6ES 7131-4BD01-0AA0	Siemens
K74.2	200029887	ESIA7197	1	=ES+S/345.5	Terminals	TM-E15C26-A1	6ES 7193-4CA50-0AA0	Siemens
K75.1	200029877	ESIA7136	1	=ES+S/345.6	Digital input	4 DI / 24VDC (VE = 5 Stück)	6ES 7131-4BD01-0AA0	Siemens
K75.1	200029887	ESIA7197	1	=ES+S/345.6	Terminals	TM-E15C26-A1	6ES 7193-4CA50-0AA0	Siemens
K75.2	200029877	ESIA7136	1	=ES+S/345.6	Digital input	4 DI / 24VDC (VE = 5 Stück)	6ES 7131-4BD01-0AA0	Siemens
K75.2	200029887	ESIA7197	1	=ES+S/345.6	Terminals	TM-E15C26-A1	6ES 7193-4CA50-0AA0	Siemens
K76.1	200029877	ESIA7136	1	=ES+S/345.7	Digital input	4 DI / 24VDC (VE = 5 Stück)	6ES 7131-4BD01-0AA0	Siemens
K76.1	200029887	ESIA7197	1	=ES+S/345.7	Terminals	TM-E15C26-A1	6ES 7193-4CA50-0AA0	Siemens
K76.2	200029877	ESIA7136	1	=ES+S/345.7	Digital input	4 DI / 24VDC (VE = 5 Stück)	6ES 7131-4BD01-0AA0	Siemens
K76.2	200029887	ESIA7197	1	=ES+S/345.7	Terminals	TM-E15C26-A1	6ES 7193-4CA50-0AA0	Siemens
K77.1	200010369	ESIA7135	1	=ES+S/345.7	analog Input	ET 200S / RTD	6ES 7134-4JB50-0AB0	Siemens
K77.1	200029887	ESIA7197	1	=ES+S/345.7	Terminals	TM-E15C26-A1	6ES 7193-4CA50-0AA0	Siemens
K79.9	200010317	ESIA7030	1	=ES+S/362.8	Profibus Repeater	Profibus - Bussystem	6ES 7972-0AA01-0XA0	Siemens
K80	200010381	ESIA7152	1	=ES+S/362.0	Module	IM 151-1	6ES 7151-1AA05-0AB0	Siemens
K80.0	200010373	ESIA7139	1	=ES+S/362.2	Power supply	PM-E 24VUC / 230VAC	6ES 7138-4CB10-0AB0	Siemens
K80.0	200010390	ESIA7195	1	=ES+S/362.2	Terminals	TM-P15C23-A0	6ES 7193-4CD30-0AA0	Siemens
K80.1	200029877	ESIA7136	1	=ES+S/362.2	Digital input	4 DI / 24VDC (VE = 5 Stück)	6ES 7131-4BD01-0AA0	Siemens
K80.1	200029887	ESIA7197	1	=ES+S/362.2	Terminals	TM-E15C26-A1	6ES 7193-4CA50-0AA0	Siemens
K80.2	200029877	ESIA7136	1	=ES+S/362.2	Digital input	4 DI / 24VDC (VE = 5 Stück)	6ES 7131-4BD01-0AA0	Siemens
K80.2	200029887	ESIA7197	1	=ES+S/362.2	Terminals	TM-E15C26-A1	6ES 7193-4CA50-0AA0	Siemens
K81.1	200029877	ESIA7136	1	=ES+S/362.3	Digital input	4 DI / 24VDC (VE = 5 Stück)	6ES 7131-4BD01-0AA0	Siemens
K81.1	200029887	ESIA7197	1	=ES+S/362.3	Terminals	TM-E15C26-A1	6ES 7193-4CA50-0AA0	Siemens
K81.2	200029877	ESIA7136	1	=ES+S/362.3	Digital input	4 DI / 24VDC (VE = 5 Stück)	6ES 7131-4BD01-0AA0	Siemens
K81.2	200029887	ESIA7197	1	=ES+S/362.3	Terminals	TM-E15C26-A1	6ES 7193-4CA50-0AA0	Siemens
K90	200010381	ESIA7152	1	=ES+S/367.0	Module	IM 151-1	6ES 7151-1AA05-0AB0	Siemens

Parts list

electrical construction

Artilelstückliste_Elo_SAP_001

DT	Part number new	old	Quantity	Placement	Designation 1	Designation 2	Order number	Manufacturer
K90.0	200010373	ESIA7139	1	=ES+S/367.2	Power supply	PM-E 24VUC / 230VAC	6ES 7138-4CB10-0AB0	Siemens
K90.0	200010390	ESIA7195	1	=ES+S/367.2	Terminals	TM-P15C23-A0	6ES 7193-4CD30-0AA0	Siemens
K90.1	200029877	ESIA7136	1	=ES+S/367.2	Digital input	4 DI / 24VDC (VE = 5 Stück)	6ES 7131-4BD01-0AA0	Siemens
K90.1	200029887	ESIA7197	1	=ES+S/367.2	Terminals	TM-E15C26-A1	6ES 7193-4CA50-0AA0	Siemens
K90.2	200029877	ESIA7136	1	=ES+S/367.2	Digital input	4 DI / 24VDC (VE = 5 Stück)	6ES 7131-4BD01-0AA0	Siemens
K90.2	200029887	ESIA7197	1	=ES+S/367.2	Terminals	TM-E15C26-A1	6ES 7193-4CA50-0AA0	Siemens
K91.1	200029877	ESIA7136	1	=ES+S/367.3	Digital input	4 DI / 24VDC (VE = 5 Stück)	6ES 7131-4BD01-0AA0	Siemens
K91.1	200029887	ESIA7197	1	=ES+S/367.3	Terminals	TM-E15C26-A1	6ES 7193-4CA50-0AA0	Siemens
K91.2	200029877	ESIA7136	1	=ES+S/367.3	Digital input	4 DI / 24VDC (VE = 5 Stück)	6ES 7131-4BD01-0AA0	Siemens
K91.2	200029887	ESIA7197	1	=ES+S/367.3	Terminals	TM-E15C26-A1	6ES 7193-4CA50-0AA0	Siemens
K92.1	200029886	ESIA7137	1	=ES+S/367.3	Digital output	4 DO / 24VDC/0,5A (VE = 5 Stück)	6ES 7132-4BD01-0AA0	Siemens
K92.1	200029887	ESIA7197	1	=ES+S/367.3	Terminals	TM-E15C26-A1	6ES 7193-4CA50-0AA0	Siemens
K93.1	200029877	ESIA7136	1	=ES+S/367.4	Digital input	4 DI / 24VDC (VE = 5 Stück)	6ES 7131-4BD01-0AA0	Siemens
K93.1	200029887	ESIA7197	1	=ES+S/367.4	Terminals	TM-E15C26-A1	6ES 7193-4CA50-0AA0	Siemens
KA4.0	200006264	EFNK9013	1	=ES+S/291.1	relay	24 VDC / 1W	38.51.7.024.0050	Finder
KA4.4	200006264	EFNK9013	1	=ES+S/291.5	relay	24 VDC / 1W	38.51.7.024.0050	Finder
KA4.5	200006264	EFNK9013	1	=ES+S/291.6	relay	24 VDC / 1W	38.51.7.024.0050	Finder
KA4.6	200011551	ESJK9040	1	=ES+S/291.7	auxiliary contactor	24 VDC / 4S	3RH1140-1BB40	Siemens
KA4.6	200011692	ESJZ9100	1	=ES+S/291.7	RC network	S00 / 24V AC/DC	3RT19 16-1CB00	Siemens
KA4.7	200011551	ESJK9040	1	=ES+S/291.8	auxiliary contactor	24 VDC / 4S	3RH1140-1BB40	Siemens
KA4.7	200011692	ESJZ9100	1	=ES+S/291.8	RC network	S00 / 24V AC/DC	3RT19 16-1CB00	Siemens
KA5.3	200006264	EFNK9013	1	=ES+S/292.4	relay	24 VDC / 1W	38.51.7.024.0050	Finder
KA8.0	200011549	ESJK9022	1	=ES+S/293.1	auxiliary contactor	24 VDC / 2S+2Ö	3RH1122-1BB40	Siemens
KA8.0	200011692	ESJZ9100	1	=ES+S/293.1	RC network	S00 / 24V AC/DC	3RT19 16-1CB00	Siemens
KA8.1	200011549	ESJK9022	1	=ES+S/293.2	auxiliary contactor	24 VDC / 2S+2Ö	3RH1122-1BB40	Siemens
KA8.1	200011692	ESJZ9100	1	=ES+S/293.2	RC network	S00 / 24V AC/DC	3RT19 16-1CB00	Siemens
KA8.2	200011549	ESJK9022	1	=ES+S/293.3	auxiliary contactor	24 VDC / 2S+2Ö	3RH1122-1BB40	Siemens
KA8.2	200011692	ESJZ9100	1	=ES+S/293.3	RC network	S00 / 24V AC/DC	3RT19 16-1CB00	Siemens
KA8.3	200011549	ESJK9022	1	=ES+S/293.4	auxiliary contactor	24 VDC / 2S+2Ö	3RH1122-1BB40	Siemens
KA8.3	200011692	ESJZ9100	1	=ES+S/293.4	RC network	S00 / 24V AC/DC	3RT19 16-1CB00	Siemens
KA8.4	200011549	ESJK9022	1	=ES+S/293.5	auxiliary contactor	24 VDC / 2S+2Ö	3RH1122-1BB40	Siemens
KA8.4	200011692	ESJZ9100	1	=ES+S/293.5	RC network	S00 / 24V AC/DC	3RT19 16-1CB00	Siemens
KA8.5	200011549	ESJK9022	1	=ES+S/293.6	auxiliary contactor	24 VDC / 2S+2Ö	3RH1122-1BB40	Siemens
KA8.5	200011692	ESJZ9100	1	=ES+S/293.6	RC network	S00 / 24V AC/DC	3RT19 16-1CB00	Siemens
KA8.6	200011549	ESJK9022	1	=ES+S/293.7	auxiliary contactor	24 VDC / 2S+2Ö	3RH1122-1BB40	Siemens
KA8.6	200011692	ESJZ9100	1	=ES+S/293.7	RC network	S00 / 24V AC/DC	3RT19 16-1CB00	Siemens
KA8.7	200011549	ESJK9022	1	=ES+S/293.8	auxiliary contactor	24 VDC / 2S+2Ö	3RH1122-1BB40	Siemens
KA8.7	200011692	ESJZ9100	1	=ES+S/293.8	RC network	S00 / 24V AC/DC	3RT19 16-1CB00	Siemens

Parts list

electrical construction

Artilelstückliste_Elo_SAP_001

DT	Part number new	old	Quantity	Placement	Designation 1	Designation 2	Order number	Manufacturer
KA9.0	200011549	ESJK9022	1	=ES+S/294.1	auxiliary contactor	24 VDC / 2S+2Ö	3RH1122-1BB40	Siemens
KA9.0	200011692	ESJZ9100	1	=ES+S/294.1	RC network	S00 / 24V AC/DC	3RT19 16-1CB00	Siemens
KA9.1	200011549	ESJK9022	1	=ES+S/294.2	auxiliary contactor	24 VDC / 2S+2Ö	3RH1122-1BB40	Siemens
KA9.1	200011692	ESJZ9100	1	=ES+S/294.2	RC network	S00 / 24V AC/DC	3RT19 16-1CB00	Siemens
KA9.2	200011549	ESJK9022	1	=ES+S/294.3	auxiliary contactor	24 VDC / 2S+2Ö	3RH1122-1BB40	Siemens
KA9.2	200011692	ESJZ9100	1	=ES+S/294.3	RC network	S00 / 24V AC/DC	3RT19 16-1CB00	Siemens
KA9.3	200011549	ESJK9022	1	=ES+S/294.4	auxiliary contactor	24 VDC / 2S+2Ö	3RH1122-1BB40	Siemens
KA9.3	200011692	ESJZ9100	1	=ES+S/294.4	RC network	S00 / 24V AC/DC	3RT19 16-1CB00	Siemens
KA9.4	200011549	ESJK9022	1	=ES+S/294.5	auxiliary contactor	24 VDC / 2S+2Ö	3RH1122-1BB40	Siemens
KA9.4	200011692	ESJZ9100	1	=ES+S/294.5	RC network	S00 / 24V AC/DC	3RT19 16-1CB00	Siemens
KA9.5	200011549	ESJK9022	1	=ES+S/294.6	auxiliary contactor	24 VDC / 2S+2Ö	3RH1122-1BB40	Siemens
KA9.5	200011692	ESJZ9100	1	=ES+S/294.6	RC network	S00 / 24V AC/DC	3RT19 16-1CB00	Siemens
KA9.6	200011549	ESJK9022	1	=ES+S/294.7	auxiliary contactor	24 VDC / 2S+2Ö	3RH1122-1BB40	Siemens
KA9.6	200011692	ESJZ9100	1	=ES+S/294.7	RC network	S00 / 24V AC/DC	3RT19 16-1CB00	Siemens
KA9.7	200011549	ESJK9022	1	=ES+S/294.8	auxiliary contactor	24 VDC / 2S+2Ö	3RH1122-1BB40	Siemens
KA9.7	200011692	ESJZ9100	1	=ES+S/294.8	RC network	S00 / 24V AC/DC	3RT19 16-1CB00	Siemens
KA16.5	200011551	ESJK9040	1	=ES+S/297.6	auxiliary contactor	24 VDC / 4S	3RH1140-1BB40	Siemens
KA16.5	200011692	ESJZ9100	1	=ES+S/297.6	RC network	S00 / 24V AC/DC	3RT19 16-1CB00	Siemens
KA16.6	200006264	EFNK9013	1	=ES+S/297.7	relay	24 VDC / 1W	38.51.7.024.0050	Finder
KA16.7	200006264	EFNK9013	1	=ES+S/297.8	relay	24 VDC / 1W	38.51.7.024.0050	Finder
KA17.0	200010852	ESIK9119	1	=ES+S/298.1	Timerelais 24 V/UC	Rückfall. 0,05s-600s	3RP1540-1AB30	Siemens
KA17.2	200006264	EFNK9013	1	=ES+S/298.3	relay	24 VDC / 1W	38.51.7.024.0050	Finder
KA17.4	200006264	EFNK9013	1	=ES+S/298.5	relay	24 VDC / 1W	38.51.7.024.0050	Finder
KA17.5	200006264	EFNK9013	1	=ES+S/298.6	relay	24 VDC / 1W	38.51.7.024.0050	Finder
KA17.6	200006264	EFNK9013	1	=ES+S/298.7	relay	24 VDC / 1W	38.51.7.024.0050	Finder
KA17.7	200006264	EFNK9013	1	=ES+S/298.8	relay	24 VDC / 1W	38.51.7.024.0050	Finder
KA24.1	200006264	EFNK9013	1	=ES+S/305.2	relay	24 VDC / 1W	38.51.7.024.0050	Finder
KA24.2	200006264	EFNK9013	1	=ES+S/305.3	relay	24 VDC / 1W	38.51.7.024.0050	Finder
KA24.3	200006264	EFNK9013	1	=ES+S/305.4	relay	24 VDC / 1W	38.51.7.024.0050	Finder
KA24.4	200006264	EFNK9013	1	=ES+S/305.5	relay	24 VDC / 1W	38.51.7.024.0050	Finder
KA24.5	200006264	EFNK9013	1	=ES+S/305.6	relay	24 VDC / 1W	38.51.7.024.0050	Finder
KA24.7	200006264	EFNK9013	1	=ES+S/305.8	relay	24 VDC / 1W	38.51.7.024.0050	Finder
KA60.6	200006264	EFNK9013	1	=ES+S/338.1	relay	24 VDC / 1W	38.51.7.024.0050	Finder
KE13.1	200010806	ESIK2010	1	=ES+S/208.5	relay	1 Wechsler	3TX7 002-1BF00	Siemens
KE13.2	200010806	ESIK2010	1	=ES+S/208.6	relay	1 Wechsler	3TX7 002-1BF00	Siemens
KISO0	200034666	EBNA4002	1	=ES+S/1.2	insulation monitor	A-Isometer AC0-793V	B91065109	Bender
KITSA2	200034133	EBNA9001	1	=ES+S/65.8	insulation monitor	24VDC	B71036403	Bender
KITSA3	200034133	EBNA9001	1	=ES+S/130.8	insulation monitor	24VDC	B71036403	Bender

Parts list

electrical construction

Artilelstückliste_Elo_SAP_001

DT	Part number new	Part number old	Quantity	Placement	Designation 1	Designation 2	Order number	Manufacturer
KITSA4	200034133	EBNA9001	1	=ES+S/194.8	insulation monitor	24VDC	B71036403	Bender
KITST1	200034133	EBNA9001	1	=ES+S/215.8	insulation monitor	24VDC	B71036403	Bender
KITST2	200034133	EBNA9001	1	=ES+S/217.8	insulation monitor	24VDC	B71036403	Bender
KLEMMKASTEN_XL11	200009363	ERIA1577	1	=AP+BDP/2.5	Bus housing	mit Fenster	BG 1577.560	Rittal
KLEMMKASTEN_XL13	200009363	ERIA1577	1	=AP+BDP/4.5	Bus housing	mit Fenster	BG 1577.560	Rittal
KLEMMKASTEN_XL14	200009363	ERIA1577	1	=AP+BDP/5.5	Bus housing	mit Fenster	BG 1577.560	Rittal
KNA	200005760	EDOK9004	1	=ES+S/265.5	EMERGENCY STOP safety switching device	24 V DC	BG 5925.02	Dold
KNA1	200011551	ESJK9040	1	=ES+S/265.8	auxiliary contactor	24 VDC / 4S	3RH1140-1BB40	Siemens
KNA1	200011497	ESJK0022	1	=ES+S/265.8	auxiliary block	HS / 2S+2Ö	3RH1911-1GA22	Siemens
KNA1	200011692	ESJZ9100	1	=ES+S/265.8	RC network	S00 / 24V AC/DC	3RT19 16-1CB00	Siemens
KNA1.1	200011551	ESJK9040	1	=ES+S/265.8	auxiliary contactor	24 VDC / 4S	3RH1140-1BB40	Siemens
KNA1.1	200011497	ESJK0022	1	=ES+S/265.8	auxiliary block	HS / 2S+2Ö	3RH1911-1GA22	Siemens
KNA1.1	200011692	ESJZ9100	1	=ES+S/265.8	RC network	S00 / 24V AC/DC	3RT19 16-1CB00	Siemens
KNA2	200011551	ESJK9040	1	=ES+S/265.9	auxiliary contactor	24 VDC / 4S	3RH1140-1BB40	Siemens
KNA2	200011497	ESJK0022	1	=ES+S/265.9	auxiliary block	HS / 2S+2Ö	3RH1911-1GA22	Siemens
KNA2	200011692	ESJZ9100	1	=ES+S/265.9	RC network	S00 / 24V AC/DC	3RT19 16-1CB00	Siemens
KNA2.1	200011551	ESJK9040	1	=ES+S/265.9	auxiliary contactor	24 VDC / 4S	3RH1140-1BB40	Siemens
KNA2.1	200011497	ESJK0022	1	=ES+S/265.9	auxiliary block	HS / 2S+2Ö	3RH1911-1GA22	Siemens
KNA2.1	200011692	ESJZ9100	1	=ES+S/265.9	RC network	S00 / 24V AC/DC	3RT19 16-1CB00	Siemens
KO0	200011551	ESJK9040	1	=ES+S/284.1	auxiliary contactor	24 VDC / 4S	3RH1140-1BB40	Siemens
KO0	200011497	ESJK0022	1	=ES+S/284.1	auxiliary block	HS / 2S+2Ö	3RH1911-1GA22	Siemens
KO0	200011692	ESJZ9100	1	=ES+S/284.1	RC network	S00 / 24V AC/DC	3RT19 16-1CB00	Siemens
KO0.1	200011551	ESJK9040	1	=ES+S/284.1	auxiliary contactor	24 VDC / 4S	3RH1140-1BB40	Siemens
KO0.1	200011497	ESJK0022	1	=ES+S/284.1	auxiliary block	HS / 2S+2Ö	3RH1911-1GA22	Siemens
KO0.1	200011692	ESJZ9100	1	=ES+S/284.1	RC network	S00 / 24V AC/DC	3RT19 16-1CB00	Siemens
KO1	200011551	ESJK9040	1	=ES+S/284.2	auxiliary contactor	24 VDC / 4S	3RH1140-1BB40	Siemens
KO1	200011497	ESJK0022	1	=ES+S/284.2	auxiliary block	HS / 2S+2Ö	3RH1911-1GA22	Siemens
KO1	200011692	ESJZ9100	1	=ES+S/284.2	RC network	S00 / 24V AC/DC	3RT19 16-1CB00	Siemens
KO1.1	200011551	ESJK9040	1	=ES+S/284.2	auxiliary contactor	24 VDC / 4S	3RH1140-1BB40	Siemens
KO1.1	200011497	ESJK0022	1	=ES+S/284.2	auxiliary block	HS / 2S+2Ö	3RH1911-1GA22	Siemens
KO1.1	200011692	ESJZ9100	1	=ES+S/284.2	RC network	S00 / 24V AC/DC	3RT19 16-1CB00	Siemens
KO2	200011551	ESJK9040	1	=ES+S/284.3	auxiliary contactor	24 VDC / 4S	3RH1140-1BB40	Siemens
KO2	200011497	ESJK0022	1	=ES+S/284.3	auxiliary block	HS / 2S+2Ö	3RH1911-1GA22	Siemens
KO2	200011692	ESJZ9100	1	=ES+S/284.3	RC network	S00 / 24V AC/DC	3RT19 16-1CB00	Siemens
KO2.1	200011551	ESJK9040	1	=ES+S/284.3	auxiliary contactor	24 VDC / 4S	3RH1140-1BB40	Siemens
KO2.1	200011497	ESJK0022	1	=ES+S/284.3	auxiliary block	HS / 2S+2Ö	3RH1911-1GA22	Siemens
KO2.1	200011692	ESJZ9100	1	=ES+S/284.3	RC network	S00 / 24V AC/DC	3RT19 16-1CB00	Siemens
KO3	200011551	ESJK9040	1	=ES+S/284.4	auxiliary contactor	24 VDC / 4S	3RH1140-1BB40	Siemens

Parts list

electrical construction

Artilelstückliste_Elo_SAP_001

DT	Part number new	Part number old	Quantity	Placement	Designation 1	Designation 2	Order number	Manufacturer
KO3	200011497	ESJK0022	1	=ES+S/284.4	auxiliary block	HS / 2S+2Ö	3RH1911-1GA22	Siemens
KO3	200011692	ESJZ9100	1	=ES+S/284.4	RC network	S00 / 24V AC/DC	3RT19 16-1CB00	Siemens
KO3.1	200011551	ESJK9040	1	=ES+S/284.4	auxiliary contactor	24 VDC / 4S	3RH1140-1BB40	Siemens
KO3.1	200011497	ESJK0022	1	=ES+S/284.4	auxiliary block	HS / 2S+2Ö	3RH1911-1GA22	Siemens
KO3.1	200011692	ESJZ9100	1	=ES+S/284.4	RC network	S00 / 24V AC/DC	3RT19 16-1CB00	Siemens
KO4	200011551	ESJK9040	1	=ES+S/285.2	auxiliary contactor	24 VDC / 4S	3RH1140-1BB40	Siemens
KO4	200011497	ESJK0022	1	=ES+S/285.2	auxiliary block	HS / 2S+2Ö	3RH1911-1GA22	Siemens
KO4	200011692	ESJZ9100	1	=ES+S/285.2	RC network	S00 / 24V AC/DC	3RT19 16-1CB00	Siemens
KO4.1	200011551	ESJK9040	1	=ES+S/285.2	auxiliary contactor	24 VDC / 4S	3RH1140-1BB40	Siemens
KO4.1	200011497	ESJK0022	1	=ES+S/285.2	auxiliary block	HS / 2S+2Ö	3RH1911-1GA22	Siemens
KO4.1	200011692	ESJZ9100	1	=ES+S/285.2	RC network	S00 / 24V AC/DC	3RT19 16-1CB00	Siemens
KO5	200011551	ESJK9040	1	=ES+S/285.4	auxiliary contactor	24 VDC / 4S	3RH1140-1BB40	Siemens
KO5	200011497	ESJK0022	1	=ES+S/285.4	auxiliary block	HS / 2S+2Ö	3RH1911-1GA22	Siemens
KO5	200011692	ESJZ9100	1	=ES+S/285.4	RC network	S00 / 24V AC/DC	3RT19 16-1CB00	Siemens
KO5.1	200011551	ESJK9040	1	=ES+S/285.4	auxiliary contactor	24 VDC / 4S	3RH1140-1BB40	Siemens
KO5.1	200011497	ESJK0022	1	=ES+S/285.4	auxiliary block	HS / 2S+2Ö	3RH1911-1GA22	Siemens
KO5.1	200011692	ESJZ9100	1	=ES+S/285.4	RC network	S00 / 24V AC/DC	3RT19 16-1CB00	Siemens
KO6	200011551	ESJK9040	1	=ES+S/286.1	auxiliary contactor	24 VDC / 4S	3RH1140-1BB40	Siemens
KO6	200011497	ESJK0022	1	=ES+S/286.1	auxiliary block	HS / 2S+2Ö	3RH1911-1GA22	Siemens
KO6	200011692	ESJZ9100	1	=ES+S/286.1	RC network	S00 / 24V AC/DC	3RT19 16-1CB00	Siemens
KO6.1	200011551	ESJK9040	1	=ES+S/286.1	auxiliary contactor	24 VDC / 4S	3RH1140-1BB40	Siemens
KO6.1	200011497	ESJK0022	1	=ES+S/286.1	auxiliary block	HS / 2S+2Ö	3RH1911-1GA22	Siemens
KO6.1	200011692	ESJZ9100	1	=ES+S/286.1	RC network	S00 / 24V AC/DC	3RT19 16-1CB00	Siemens
KO7	200011551	ESJK9040	1	=ES+S/286.2	auxiliary contactor	24 VDC / 4S	3RH1140-1BB40	Siemens
KO7	200011497	ESJK0022	1	=ES+S/286.2	auxiliary block	HS / 2S+2Ö	3RH1911-1GA22	Siemens
KO7	200011692	ESJZ9100	1	=ES+S/286.2	RC network	S00 / 24V AC/DC	3RT19 16-1CB00	Siemens
KO7.1	200011551	ESJK9040	1	=ES+S/286.2	auxiliary contactor	24 VDC / 4S	3RH1140-1BB40	Siemens
KO7.1	200011497	ESJK0022	1	=ES+S/286.2	auxiliary block	HS / 2S+2Ö	3RH1911-1GA22	Siemens
KO7.1	200011692	ESJZ9100	1	=ES+S/286.2	RC network	S00 / 24V AC/DC	3RT19 16-1CB00	Siemens
KRM31	200010244	ESIA4003	1	=ES+S/275.1	thermistor relay	24 V UC	3RN10 10-1CB00	Siemens
KSD	200005760	EDOK9004	1	=ES+S/268.6	EMERGENCY STOP safety switching device	24 V DC	BG 5925.02	Dold
KSR	200009117	EPZA9002	1	=ES+S/276.2	Multi-function control	20 Eing. / 4 Takta.	Nr. 773100	Pilz
KSR	200009115	EPZA9000	1	=ES+S/276.2	memory card	32kByte	Nr. 779211	Pilz
KSR	200009118	EPZA9003	1	=ES+S/276.2	connecting terminal	für m1p / m0p	Nr. 793100	Pilz
KSR1	200009120	EPZA9005	1	=ES+S/276.6	extension module	4 Halbleiterausgänge	Nr. 773500	Pilz
KSR1	200009121	EPZA9006	1	=ES+S/276.6	connecting terminal	für mi1p / m01p	Nr. 793400	Pilz
KSR2	200009123	EPZA9008	1	=ES+S/276.7	extension module	8 digitale Eingänge	Nr. 773400	Pilz
KSR2	200009121	EPZA9006	1	=ES+S/276.7	connecting terminal	für mi1p / m01p	Nr. 793400	Pilz

Parts list

electrical construction

Artilelstückliste_Elo_SAP_001

DT	Part number new	Part number old	Quantity	Placement	Designation 1	Designation 2	Order number	Manufacturer
KSRDP	200009122	EPZA9007	1	=ES+S/276.1	extension module	Feldbus	Nr. 773721	Pilz
Klemmkasten_XL12	200009329	ERIA0662L	1	=AP+BDP/3.0	Enclosure	600 x 600 x 210 RAL 7035	AE 1060.500	Rittal
M01	200009403	ERIA3027	1	=ES+S/210.4	ventilator	230 V / 50-60 Hz	SK 3327.107	Rittal
M01	200009407	ERIA3035	1	=ES+S/210.4	filter	SK 3326.207	SK 3326.207	Rittal
M02	200009403	ERIA3027	1	=ES+S/210.4	ventilator	230 V / 50-60 Hz	SK 3327.107	Rittal
M02	200009407	ERIA3035	1	=ES+S/210.4	filter	SK 3326.207	SK 3326.207	Rittal
M03	200009403	ERIA3027	1	=ES+S/210.5	ventilator	230 V / 50-60 Hz	SK 3327.107	Rittal
M03	200009408	ERIA3036	2	=ES+S/210.5	filter cover	SK 3148.007	SK 3148.007	Rittal
M04	200009403	ERIA3027	1	=ES+S/210.6	ventilator	230 V / 50-60 Hz	SK 3327.107	Rittal
M04	200009408	ERIA3036	1	=ES+S/210.6	filter cover	SK 3148.007	SK 3148.007	Rittal
M05	200009403	ERIA3027	1	=ES+S/210.7	ventilator	230 V / 50-60 Hz	SK 3327.107	Rittal
M05	200009407	ERIA3035	1	=ES+S/210.7	filter	SK 3326.207	SK 3326.207	Rittal
M06	200009403	ERIA3027	1	=ES+S/210.8	ventilator	230 V / 50-60 Hz	SK 3327.107	Rittal
M06	200009407	ERIA3035	1	=ES+S/210.8	filter	SK 3326.207	SK 3326.207	Rittal
M07	200009403	ERIA3027	1	=ES+S/210.8	ventilator	230 V / 50-60 Hz	SK 3327.107	Rittal
M07	200009407	ERIA3035	1	=ES+S/210.8	filter	SK 3326.207	SK 3326.207	Rittal
M08	200009403	ERIA3027	1	=ES+S/211.6	ventilator	230 V / 50-60 Hz	SK 3327.107	Rittal
M08	200009408	ERIA3036	1	=ES+S/211.6	filter cover	SK 3148.007	SK 3148.007	Rittal
M09	200009403	ERIA3027	1	=ES+S/211.7	ventilator	230 V / 50-60 Hz	SK 3327.107	Rittal
M09	200009408	ERIA3036	1	=ES+S/211.7	filter cover	SK 3148.007	SK 3148.007	Rittal
M10	200009403	ERIA3027	1	=ES+S/211.8	ventilator	230 V / 50-60 Hz	SK 3327.107	Rittal
M10	200009408	ERIA3036	1	=ES+S/211.8	filter cover	SK 3148.007	SK 3148.007	Rittal
MLS1	200009410	ERIA3047	1	=ES+S/2.8	ventilator	3Ph / 400/460V 50-60Hz	SK 3327.147	Rittal
MLS1	200009407	ERIA3035	1	=ES+S/2.8	filter	SK 3326.207	SK 3326.207	Rittal
MLS11	200009410	ERIA3047	1	=ES+S/132.8	ventilator	3Ph / 400/460V 50-60Hz	SK 3327.147	Rittal
MLS11	200009407	ERIA3035	1	=ES+S/132.8	filter	SK 3326.207	SK 3326.207	Rittal
MLS19	200009410	ERIA3047	1	=ES+S/23.8	ventilator	3Ph / 400/460V 50-60Hz	SK 3327.147	Rittal
MLS19	200009407	ERIA3035	1	=ES+S/23.8	filter	SK 3326.207	SK 3326.207	Rittal
MLS29	200009410	ERIA3047	1	=ES+S/153.8	ventilator	3Ph / 400/460V 50-60Hz	SK 3327.147	Rittal
MLS29	200009407	ERIA3035	1	=ES+S/153.8	filter	SK 3326.207	SK 3326.207	Rittal
MLS37	200009410	ERIA3047	1	=ES+S/44.8	ventilator	3Ph / 400/460V 50-60Hz	SK 3327.147	Rittal
MLS37	200009407	ERIA3035	1	=ES+S/44.8	filter	SK 3326.207	SK 3326.207	Rittal
MLS47	200009410	ERIA3047	1	=ES+S/174.8	ventilator	3Ph / 400/460V 50-60Hz	SK 3327.147	Rittal
MLS47	200009407	ERIA3035	1	=ES+S/174.8	filter	SK 3326.207	SK 3326.207	Rittal
MLS55	200009410	ERIA3047	1	=ES+S/67.8	ventilator	3Ph / 400/460V 50-60Hz	SK 3327.147	Rittal
MLS55	200009407	ERIA3035	1	=ES+S/67.8	filter	SK 3326.207	SK 3326.207	Rittal
MLS73	200009410	ERIA3047	1	=ES+S/88.8	ventilator	3Ph / 400/460V 50-60Hz	SK 3327.147	Rittal
MLS73	200009407	ERIA3035	1	=ES+S/88.8	filter	SK 3326.207	SK 3326.207	Rittal

Parts list

electrical construction

Artilelstückliste_Elo_SAP_001

DT	Part number new	Part number old	Quantity	Placement	Designation 1	Designation 2	Order number	Manufacturer
MLS91	200009410	ERIA3047	1	=ES+S/109.4	ventilator	3Ph / 400/460V 50-60Hz	SK 3327.147	Rittal
MLS91	200009407	ERIA3035	1	=ES+S/109.4	filter	SK 3326.207	SK 3326.207	Rittal
P1	200005670	ECRP9001	1	=ES+S/269.3	Operating hours counter	24 V DC	630.3	Bauser
P1	200005656	ECRA0001	1	=ES+S/269.3	frame	für Betriebstundenzähler		Bauser
PA25.0	200010756	ESIH3440	1	=ES+S/306.1	Lamp white	LED für 24V AC/DC	3SB 3400-1PE	Siemens
PA25.0	200010735	ESIH3040	1	=ES+S/306.1	Indicator light white	Frontelement	3 SB 3001-6BA60	Siemens
PA25.1	200010756	ESIH3440	1	=ES+S/306.2	Lamp white	LED für 24V AC/DC	3SB 3400-1PE	Siemens
PA25.1	200010735	ESIH3040	1	=ES+S/306.2	Indicator light white	Frontelement	3 SB 3001-6BA60	Siemens
PA25.4	200010759	ESIH3451	1	=ES+S/306.5	Lamp blue	LED für 24V AC/DC, Bodenbefestigung	3SB 3420-1PD	Siemens
PA25.5	200010759	ESIH3451	1	=ES+S/306.6	Lamp blue	LED für 24V AC/DC, Bodenbefestigung	3SB 3420-1PD	Siemens
PA25.6	200010759	ESIH3451	1	=ES+S/306.7	Lamp blue	LED für 24V AC/DC, Bodenbefestigung	3SB 3420-1PD	Siemens
PA25.7	200010759	ESIH3451	1	=ES+S/306.8	Lamp blue	LED für 24V AC/DC, Bodenbefestigung	3SB 3420-1PD	Siemens
PA62.4	200010718	ESIH2012	1	=ES+S/342.1	luminous column red	BA 15d	8 WD 4400-1AB	Siemens
PA62.4	200010760	ESIH4006	1	=ES+S/342.1	Lamp	BA 15d / 24 V / 5 Watt	8 WD 4328-1XX	Siemens
PA62.4	200010709	ESIH2002	1	=ES+S/342.1	Connection point luminous column	für Rohrmontage	8 WD 4408-0AA	Siemens
PA62.4	200010715	ESIH2008	1	=ES+S/342.1	mounting accessories	100 mm	8 WD 4308-0DA	Siemens
PA62.5	200010721	ESIH2032	1	=ES+S/342.5	luminous column yellow	BA 15d	8 WD 4400-1AD	Siemens
PA62.5	200010760	ESIH4006	1	=ES+S/342.5	Lamp	BA 15d / 24 V / 5 Watt	8 WD 4328-1XX	Siemens
PA62.6	200010720	ESIH2022	1	=ES+S/342.1	luminous column green	BA 15d	8 WD 4400-1AC	Siemens
PA62.6	200010760	ESIH4006	1	=ES+S/342.1	Lamp	BA 15d / 24 V / 5 Watt	8 WD 4328-1XX	Siemens
PSE	200010752	ESIH3420	1	=ES+S/269.1	Lamp green	LED für 24V AC/DC	3SB 3400-1PC	Siemens
Q0	200028792	ESIQ6161	1	=ES+S/1.0	power circuit breaker	1600A	3VL8716-1SE30-0AA0	Siemens
Q0	200010886	ESIQ6001	1	=ES+S/1.0	Cover	lange Ausführung	3VL9800-8CA30	Siemens
Q0	200010887	ESIQ6002	1	=ES+S/1.0	Rotary drive kpl.	mit 300mm Verlängerungswelle	3VL9800-3HF05	Siemens
Q0	200013232	EWOF1036	2	=ES+S/1.0	Cover	Leitungsanschluß 270x200x90 mm	1757	Wöhner
Q0	200013238	EWOF1080	6	=ES+S/1.0	Terminals	für Doppel-T-Profil 320-800 qmm (VE=3 Stück)	Nr. 01185	Wöhner
Q0	200013239	EWOF1081	9	=ES+S/1.0	busbar support	für Doppel-T-Profil 3-polig	Nr. 01231	Wöhner
Q0	200013240	EWOF1082	4	=ES+S/1.0	Cover	für T-Profil 3-polig (VE=4 Stück)	Nr. 01234	Wöhner
Q0	200013241	EWOF1083	1	=ES+S/1.0	Cover	Länge: 1100mm (VE=2 Stück)	Nr. 01025	Wöhner
Q0	200013242	EWOF1084	1	=ES+S/1.0	support	für Leerfeldabdeckung	Nr. 01026	Wöhner
Q0	200013243	EWOF1085	3	=ES+S/1.0	ground vat	geschlitzt 230x1100mm (VE=2 Stück)	Nr. 01009	Wöhner
Q0	200028793	EWOF1097	3	=ES+S/1.0	Busbar	Doppel-T-Profil 720 qmm a 2,40 mtr	Nr. 01608	Wöhner
Q0	200028794	EWOF1098	2	=ES+S/1.0	Busbar	Doppel-T-Profil 720 qmm a 2,00 mtr	Nr. 01608.900	Wöhner
Q0	200013204	EWOF1002	6	=ES+S/1.0	busbar support	3 pol. 35 - 120 mm² + Abdeckung	01495	Wöhner
Q0	200013205	EWOF1003	4	=ES+S/1.0	Cover		1573	Wöhner
Q0	200013249	EWOF1092	3	=ES+S/1.0	Busbar	E-CU 30 x 5 mm a 1,90 mtr	1.622.900	Wöhner
Q0	200007305	EKMQ9007	1	=ES+S/1.0	Terminals	4x50-240 qmm NZM4-XKA	266836	Möller
Q0	200013213	EWOF1014	2	=ES+S/1.0	sub-plate	3 pol. max 32x20mm	1753	Wöhner

Parts list

electrical construction

Artilelstückliste_Elo_SAP_001

DT	Part number new	Part number old	Quantity	Placement	Designation 1	Designation 2	Order number	Manufacturer
Q1.1	200011625	ESJQ3080	1	=ES+S/3.1	power circuit breaker	5,5 - 8,0 A	3RV1021-1HA15	Siemens
Q1.1	200011633	ESJQ3301	1	=ES+S/3.1	Power supply	6 - 25 qmm	3RV1915-5A	Siemens
Q1.1	200011637	ESJQ3305	3	=ES+S/3.1	bus voltage	für 5 Schalter	3RV1915-1DB	Siemens
Q1.2	200011625	ESJQ3080	1	=ES+S/4.1	power circuit breaker	5,5 - 8,0 A	3RV1021-1HA15	Siemens
Q1.3	200011625	ESJQ3080	1	=ES+S/5.1	power circuit breaker	5,5 - 8,0 A	3RV1021-1HA15	Siemens
Q1.4	200011625	ESJQ3080	1	=ES+S/6.1	power circuit breaker	5,5 - 8,0 A	3RV1021-1HA15	Siemens
Q1.5	200011625	ESJQ3080	1	=ES+S/7.1	power circuit breaker	5,5 - 8,0 A	3RV1021-1HA15	Siemens
Q1.6	200011625	ESJQ3080	1	=ES+S/8.1	power circuit breaker	5,5 - 8,0 A	3RV1021-1HA15	Siemens
Q1.7	200011625	ESJQ3080	1	=ES+S/10.1	power circuit breaker	5,5 - 8,0 A	3RV1021-1HA15	Siemens
Q1.7	200011633	ESJQ3301	1	=ES+S/10.1	Power supply	6 - 25 qmm	3RV1915-5A	Siemens
Q1.7	200011636	ESJQ3304	1	=ES+S/10.1	bus voltage	für 4 Schalter	3RV1915-1CB	Siemens
Q1.7	200011637	ESJQ3305	2	=ES+S/10.1	bus voltage	für 5 Schalter	3RV1915-1DB	Siemens
Q1.8	200011625	ESJQ3080	1	=ES+S/11.1	power circuit breaker	5,5 - 8,0 A	3RV1021-1HA15	Siemens
Q1.9	200011625	ESJQ3080	1	=ES+S/12.1	power circuit breaker	5,5 - 8,0 A	3RV1021-1HA15	Siemens
Q1.10	200011625	ESJQ3080	1	=ES+S/13.1	power circuit breaker	5,5 - 8,0 A	3RV1021-1HA15	Siemens
Q1.11	200011625	ESJQ3080	1	=ES+S/14.1	power circuit breaker	5,5 - 8,0 A	3RV1021-1HA15	Siemens
Q1.12	200011625	ESJQ3080	1	=ES+S/15.1	power circuit breaker	5,5 - 8,0 A	3RV1021-1HA15	Siemens
Q1.13	200011625	ESJQ3080	1	=ES+S/17.1	power circuit breaker	5,5 - 8,0 A	3RV1021-1HA15	Siemens
Q1.13	200011633	ESJQ3301	1	=ES+S/17.1	Power supply	6 - 25 qmm	3RV1915-5A	Siemens
Q1.13	200011636	ESJQ3304	1	=ES+S/17.1	bus voltage	für 4 Schalter	3RV1915-1CB	Siemens
Q1.13	200011637	ESJQ3305	2	=ES+S/17.1	bus voltage	für 5 Schalter	3RV1915-1DB	Siemens
Q1.14	200011625	ESJQ3080	1	=ES+S/18.1	power circuit breaker	5,5 - 8,0 A	3RV1021-1HA15	Siemens
Q1.15	200011625	ESJQ3080	1	=ES+S/19.1	power circuit breaker	5,5 - 8,0 A	3RV1021-1HA15	Siemens
Q1.16	200011625	ESJQ3080	1	=ES+S/20.1	power circuit breaker	5,5 - 8,0 A	3RV1021-1HA15	Siemens
Q1.17	200011625	ESJQ3080	1	=ES+S/21.1	power circuit breaker	5,5 - 8,0 A	3RV1021-1HA15	Siemens
Q1.18	200011625	ESJQ3080	1	=ES+S/22.1	power circuit breaker	5,5 - 8,0 A	3RV1021-1HA15	Siemens
Q1.19	200011625	ESJQ3080	1	=ES+S/24.1	power circuit breaker	5,5 - 8,0 A	3RV1021-1HA15	Siemens
Q1.19	200011633	ESJQ3301	1	=ES+S/24.1	Power supply	6 - 25 qmm	3RV1915-5A	Siemens
Q1.19	200011637	ESJQ3305	3	=ES+S/24.1	bus voltage	für 5 Schalter	3RV1915-1DB	Siemens
Q1.20	200011625	ESJQ3080	1	=ES+S/25.1	power circuit breaker	5,5 - 8,0 A	3RV1021-1HA15	Siemens
Q1.21	200011625	ESJQ3080	1	=ES+S/26.1	power circuit breaker	5,5 - 8,0 A	3RV1021-1HA15	Siemens
Q1.22	200011625	ESJQ3080	1	=ES+S/27.1	power circuit breaker	5,5 - 8,0 A	3RV1021-1HA15	Siemens
Q1.23	200011625	ESJQ3080	1	=ES+S/28.1	power circuit breaker	5,5 - 8,0 A	3RV1021-1HA15	Siemens
Q1.24	200011625	ESJQ3080	1	=ES+S/29.1	power circuit breaker	5,5 - 8,0 A	3RV1021-1HA15	Siemens
Q1.25	200011625	ESJQ3080	1	=ES+S/31.1	power circuit breaker	5,5 - 8,0 A	3RV1021-1HA15	Siemens
Q1.25	200011633	ESJQ3301	1	=ES+S/31.1	Power supply	6 - 25 qmm	3RV1915-5A	Siemens
Q1.25	200011636	ESJQ3304	1	=ES+S/31.1	bus voltage	für 4 Schalter	3RV1915-1CB	Siemens
Q1.25	200011637	ESJQ3305	2	=ES+S/31.1	bus voltage	für 5 Schalter	3RV1915-1DB	Siemens

Parts list

electrical construction

Artilelstückliste_Elo_SAP_001

DT	Part number new	Part number old	Quantity	Placement	Designation 1	Designation 2	Order number	Manufacturer
Q1.26	200011625	ESJQ3080	1	=ES+S/32.1	power circuit breaker	5,5 - 8,0 A	3RV1021-1HA15	Siemens
Q1.27	200011625	ESJQ3080	1	=ES+S/33.1	power circuit breaker	5,5 - 8,0 A	3RV1021-1HA15	Siemens
Q1.28	200011625	ESJQ3080	1	=ES+S/34.1	power circuit breaker	5,5 - 8,0 A	3RV1021-1HA15	Siemens
Q1.29	200011625	ESJQ3080	1	=ES+S/35.1	power circuit breaker	5,5 - 8,0 A	3RV1021-1HA15	Siemens
Q1.30	200011625	ESJQ3080	1	=ES+S/36.1	power circuit breaker	5,5 - 8,0 A	3RV1021-1HA15	Siemens
Q1.31	200011625	ESJQ3080	1	=ES+S/38.1	power circuit breaker	5,5 - 8,0 A	3RV1021-1HA15	Siemens
Q1.31	200011633	ESJQ3301	1	=ES+S/38.1	Power supply	6 - 25 qmm	3RV1915-5A	Siemens
Q1.31	200011636	ESJQ3304	1	=ES+S/38.1	bus voltage	für 4 Schalter	3RV1915-1CB	Siemens
Q1.31	200011637	ESJQ3305	2	=ES+S/38.1	bus voltage	für 5 Schalter	3RV1915-1DB	Siemens
Q1.32	200011625	ESJQ3080	1	=ES+S/39.1	power circuit breaker	5,5 - 8,0 A	3RV1021-1HA15	Siemens
Q1.33	200011625	ESJQ3080	1	=ES+S/40.1	power circuit breaker	5,5 - 8,0 A	3RV1021-1HA15	Siemens
Q1.34	200011625	ESJQ3080	1	=ES+S/41.1	power circuit breaker	5,5 - 8,0 A	3RV1021-1HA15	Siemens
Q1.35	200011625	ESJQ3080	1	=ES+S/42.1	power circuit breaker	5,5 - 8,0 A	3RV1021-1HA15	Siemens
Q1.36	200011625	ESJQ3080	1	=ES+S/43.1	power circuit breaker	5,5 - 8,0 A	3RV1021-1HA15	Siemens
Q1.37	200011625	ESJQ3080	1	=ES+S/45.1	power circuit breaker	5,5 - 8,0 A	3RV1021-1HA15	Siemens
Q1.37	200011633	ESJQ3301	1	=ES+S/45.1	Power supply	6 - 25 qmm	3RV1915-5A	Siemens
Q1.37	200011637	ESJQ3305	3	=ES+S/45.1	bus voltage	für 5 Schalter	3RV1915-1DB	Siemens
Q1.38	200011625	ESJQ3080	1	=ES+S/46.1	power circuit breaker	5,5 - 8,0 A	3RV1021-1HA15	Siemens
Q1.39	200011625	ESJQ3080	1	=ES+S/47.1	power circuit breaker	5,5 - 8,0 A	3RV1021-1HA15	Siemens
Q1.40	200011625	ESJQ3080	1	=ES+S/48.1	power circuit breaker	5,5 - 8,0 A	3RV1021-1HA15	Siemens
Q1.41	200011625	ESJQ3080	1	=ES+S/49.1	power circuit breaker	5,5 - 8,0 A	3RV1021-1HA15	Siemens
Q1.42	200011625	ESJQ3080	1	=ES+S/50.1	power circuit breaker	5,5 - 8,0 A	3RV1021-1HA15	Siemens
Q1.43	200011625	ESJQ3080	1	=ES+S/52.1	power circuit breaker	5,5 - 8,0 A	3RV1021-1HA15	Siemens
Q1.43	200011633	ESJQ3301	1	=ES+S/52.1	Power supply	6 - 25 qmm	3RV1915-5A	Siemens
Q1.43	200011636	ESJQ3304	1	=ES+S/52.1	bus voltage	für 4 Schalter	3RV1915-1CB	Siemens
Q1.43	200011637	ESJQ3305	2	=ES+S/52.1	bus voltage	für 5 Schalter	3RV1915-1DB	Siemens
Q1.44	200011625	ESJQ3080	1	=ES+S/53.1	power circuit breaker	5,5 - 8,0 A	3RV1021-1HA15	Siemens
Q1.45	200011625	ESJQ3080	1	=ES+S/54.1	power circuit breaker	5,5 - 8,0 A	3RV1021-1HA15	Siemens
Q1.46	200011625	ESJQ3080	1	=ES+S/55.1	power circuit breaker	5,5 - 8,0 A	3RV1021-1HA15	Siemens
Q1.47	200011625	ESJQ3080	1	=ES+S/56.1	power circuit breaker	5,5 - 8,0 A	3RV1021-1HA15	Siemens
Q1.48	200011625	ESJQ3080	1	=ES+S/57.1	power circuit breaker	5,5 - 8,0 A	3RV1021-1HA15	Siemens
Q1.49	200011625	ESJQ3080	1	=ES+S/59.1	power circuit breaker	5,5 - 8,0 A	3RV1021-1HA15	Siemens
Q1.49	200011633	ESJQ3301	1	=ES+S/59.1	Power supply	6 - 25 qmm	3RV1915-5A	Siemens
Q1.49	200011637	ESJQ3305	3	=ES+S/59.1	bus voltage	für 5 Schalter	3RV1915-1DB	Siemens
Q1.50	200011625	ESJQ3080	1	=ES+S/60.1	power circuit breaker	5,5 - 8,0 A	3RV1021-1HA15	Siemens
Q1.51	200011625	ESJQ3080	1	=ES+S/61.1	power circuit breaker	5,5 - 8,0 A	3RV1021-1HA15	Siemens
Q1.52	200011625	ESJQ3080	1	=ES+S/62.1	power circuit breaker	5,5 - 8,0 A	3RV1021-1HA15	Siemens
Q1.53	200011625	ESJQ3080	1	=ES+S/63.1	power circuit breaker	5,5 - 8,0 A	3RV1021-1HA15	Siemens

Parts list

electrical construction

Artilelstückliste_Elo_SAP_001

DT	Part number new	Part number old	Quantity	Placement	Designation 1	Designation 2	Order number	Manufacturer
Q1.54	200011625	ESJQ3080	1	=ES+S/64.1	power circuit breaker	5,5 - 8,0 A	3RV1021-1HA15	Siemens
Q1.55	200011625	ESJQ3080	1	=ES+S/68.1	power circuit breaker	5,5 - 8,0 A	3RV1021-1HA15	Siemens
Q1.55	200011633	ESJQ3301	1	=ES+S/68.1	Power supply	6 - 25 qmm	3RV1915-5A	Siemens
Q1.55	200011637	ESJQ3305	3	=ES+S/68.1	bus voltage	für 5 Schalter	3RV1915-1DB	Siemens
Q1.56	200011625	ESJQ3080	1	=ES+S/69.1	power circuit breaker	5,5 - 8,0 A	3RV1021-1HA15	Siemens
Q1.57	200011625	ESJQ3080	1	=ES+S/70.1	power circuit breaker	5,5 - 8,0 A	3RV1021-1HA15	Siemens
Q1.58	200011625	ESJQ3080	1	=ES+S/71.1	power circuit breaker	5,5 - 8,0 A	3RV1021-1HA15	Siemens
Q1.59	200011625	ESJQ3080	1	=ES+S/72.1	power circuit breaker	5,5 - 8,0 A	3RV1021-1HA15	Siemens
Q1.60	200011625	ESJQ3080	1	=ES+S/73.1	power circuit breaker	5,5 - 8,0 A	3RV1021-1HA15	Siemens
Q1.61	200011625	ESJQ3080	1	=ES+S/75.1	power circuit breaker	5,5 - 8,0 A	3RV1021-1HA15	Siemens
Q1.61	200011633	ESJQ3301	1	=ES+S/75.1	Power supply	6 - 25 qmm	3RV1915-5A	Siemens
Q1.61	200011636	ESJQ3304	1	=ES+S/75.1	bus voltage	für 4 Schalter	3RV1915-1CB	Siemens
Q1.61	200011637	ESJQ3305	2	=ES+S/75.1	bus voltage	für 5 Schalter	3RV1915-1DB	Siemens
Q1.62	200011625	ESJQ3080	1	=ES+S/76.1	power circuit breaker	5,5 - 8,0 A	3RV1021-1HA15	Siemens
Q1.63	200011625	ESJQ3080	1	=ES+S/77.1	power circuit breaker	5,5 - 8,0 A	3RV1021-1HA15	Siemens
Q1.64	200011625	ESJQ3080	1	=ES+S/78.1	power circuit breaker	5,5 - 8,0 A	3RV1021-1HA15	Siemens
Q1.65	200011625	ESJQ3080	1	=ES+S/79.1	power circuit breaker	5,5 - 8,0 A	3RV1021-1HA15	Siemens
Q1.66	200011625	ESJQ3080	1	=ES+S/80.1	power circuit breaker	5,5 - 8,0 A	3RV1021-1HA15	Siemens
Q1.67	200011625	ESJQ3080	1	=ES+S/82.1	power circuit breaker	5,5 - 8,0 A	3RV1021-1HA15	Siemens
Q1.67	200011633	ESJQ3301	1	=ES+S/82.1	Power supply	6 - 25 qmm	3RV1915-5A	Siemens
Q1.67	200011636	ESJQ3304	1	=ES+S/82.1	bus voltage	für 4 Schalter	3RV1915-1CB	Siemens
Q1.67	200011637	ESJQ3305	2	=ES+S/82.1	bus voltage	für 5 Schalter	3RV1915-1DB	Siemens
Q1.68	200011625	ESJQ3080	1	=ES+S/83.1	power circuit breaker	5,5 - 8,0 A	3RV1021-1HA15	Siemens
Q1.69	200011625	ESJQ3080	1	=ES+S/84.1	power circuit breaker	5,5 - 8,0 A	3RV1021-1HA15	Siemens
Q1.70	200011625	ESJQ3080	1	=ES+S/85.1	power circuit breaker	5,5 - 8,0 A	3RV1021-1HA15	Siemens
Q1.71	200011625	ESJQ3080	1	=ES+S/86.1	power circuit breaker	5,5 - 8,0 A	3RV1021-1HA15	Siemens
Q1.72	200011625	ESJQ3080	1	=ES+S/87.1	power circuit breaker	5,5 - 8,0 A	3RV1021-1HA15	Siemens
Q1.73	200011625	ESJQ3080	1	=ES+S/89.1	power circuit breaker	5,5 - 8,0 A	3RV1021-1HA15	Siemens
Q1.73	200011633	ESJQ3301	1	=ES+S/89.1	Power supply	6 - 25 qmm	3RV1915-5A	Siemens
Q1.73	200011637	ESJQ3305	1	=ES+S/89.1	bus voltage	für 5 Schalter	3RV1915-1DB	Siemens
Q1.74	200011625	ESJQ3080	1	=ES+S/90.1	power circuit breaker	5,5 - 8,0 A	3RV1021-1HA15	Siemens
Q1.75	200011625	ESJQ3080	1	=ES+S/91.1	power circuit breaker	5,5 - 8,0 A	3RV1021-1HA15	Siemens
Q1.76	200011625	ESJQ3080	1	=ES+S/92.1	power circuit breaker	5,5 - 8,0 A	3RV1021-1HA15	Siemens
Q1.77	200011625	ESJQ3080	1	=ES+S/93.1	power circuit breaker	5,5 - 8,0 A	3RV1021-1HA15	Siemens
Q1.78	200011625	ESJQ3080	1	=ES+S/94.1	power circuit breaker	5,5 - 8,0 A	3RV1021-1HA15	Siemens
Q1.79	200011625	ESJQ3080	1	=ES+S/96.1	power circuit breaker	5,5 - 8,0 A	3RV1021-1HA15	Siemens
Q1.79	200011633	ESJQ3301	1	=ES+S/96.1	Power supply	6 - 25 qmm	3RV1915-5A	Siemens
Q1.79	200011636	ESJQ3304	1	=ES+S/96.1	bus voltage	für 4 Schalter	3RV1915-1CB	Siemens

Parts list

electrical construction

Artilelstückliste_Elo_SAP_001

DT	Part number new	Part number old	Quantity	Placement	Designation 1	Designation 2	Order number	Manufacturer
Q1.79	200011637	ESJQ3305	2	=ES+S/96.1	bus voltage	für 5 Schalter	3RV1915-1DB	Siemens
Q1.80	200011625	ESJQ3080	1	=ES+S/97.1	power circuit breaker	5,5 - 8,0 A	3RV1021-1HA15	Siemens
Q1.81	200011625	ESJQ3080	1	=ES+S/98.1	power circuit breaker	5,5 - 8,0 A	3RV1021-1HA15	Siemens
Q1.82	200011625	ESJQ3080	1	=ES+S/99.1	power circuit breaker	5,5 - 8,0 A	3RV1021-1HA15	Siemens
Q1.83	200011625	ESJQ3080	1	=ES+S/100.1	power circuit breaker	5,5 - 8,0 A	3RV1021-1HA15	Siemens
Q1.84	200011625	ESJQ3080	1	=ES+S/101.1	power circuit breaker	5,5 - 8,0 A	3RV1021-1HA15	Siemens
Q1.85	200011625	ESJQ3080	1	=ES+S/103.1	power circuit breaker	5,5 - 8,0 A	3RV1021-1HA15	Siemens
Q1.85	200011633	ESJQ3301	1	=ES+S/103.1	Power supply	6 - 25 qmm	3RV1915-5A	Siemens
Q1.85	200011636	ESJQ3304	1	=ES+S/103.1	bus voltage	für 4 Schalter	3RV1915-1CB	Siemens
Q1.85	200011637	ESJQ3305	2	=ES+S/103.1	bus voltage	für 5 Schalter	3RV1915-1DB	Siemens
Q1.86	200011625	ESJQ3080	1	=ES+S/104.1	power circuit breaker	5,5 - 8,0 A	3RV1021-1HA15	Siemens
Q1.87	200011625	ESJQ3080	1	=ES+S/105.1	power circuit breaker	5,5 - 8,0 A	3RV1021-1HA15	Siemens
Q1.88	200011625	ESJQ3080	1	=ES+S/106.1	power circuit breaker	5,5 - 8,0 A	3RV1021-1HA15	Siemens
Q1.89	200011625	ESJQ3080	1	=ES+S/107.1	power circuit breaker	5,5 - 8,0 A	3RV1021-1HA15	Siemens
Q1.90	200011625	ESJQ3080	1	=ES+S/108.1	power circuit breaker	5,5 - 8,0 A	3RV1021-1HA15	Siemens
Q1.91	200011625	ESJQ3080	1	=ES+S/110.1	power circuit breaker	5,5 - 8,0 A	3RV1021-1HA15	Siemens
Q1.91	200011633	ESJQ3301	1	=ES+S/110.1	Power supply	6 - 25 qmm	3RV1915-5A	Siemens
Q1.91	200011637	ESJQ3305	1	=ES+S/110.1	bus voltage	für 5 Schalter	3RV1915-1DB	Siemens
Q1.91	200011635	ESJQ3303	1	=ES+S/110.1	bus voltage	für 3 Schalter	3RV1915-1BB	Siemens
Q1.92	200011625	ESJQ3080	1	=ES+S/111.1	power circuit breaker	5,5 - 8,0 A	3RV1021-1HA15	Siemens
Q1.93	200011625	ESJQ3080	1	=ES+S/112.1	power circuit breaker	5,5 - 8,0 A	3RV1021-1HA15	Siemens
Q1.95	200011625	ESJQ3080	1	=ES+S/113.1	power circuit breaker	5,5 - 8,0 A	3RV1021-1HA15	Siemens
Q1.95	200011633	ESJQ3301	1	=ES+S/113.1	Power supply	6 - 25 qmm	3RV1915-5A	Siemens
Q1.95	200011637	ESJQ3305	1	=ES+S/113.1	bus voltage	für 5 Schalter	3RV1915-1DB	Siemens
Q1.95	200011634	ESJQ3302	1	=ES+S/113.1	bus voltage	für 2 Schalter	3RV1915-1AB	Siemens
Q1.97	200011627	ESJQ3125	1	=ES+S/114.1	power circuit breaker	9,0 - 12,5 A	3RV1021-1KA15	Siemens
Q1.99	200011625	ESJQ3080	1	=ES+S/115.1	power circuit breaker	5,5 - 8,0 A	3RV1021-1HA15	Siemens
Q1.101	200011629	ESJQ3200	1	=ES+S/117.1	power circuit breaker	14 - 20 A	3RV1021-4BA15	Siemens
Q1.101	200011633	ESJQ3301	1	=ES+S/117.1	Power supply	6 - 25 qmm	3RV1915-5A	Siemens
Q1.101	200011636	ESJQ3304	1	=ES+S/117.1	bus voltage	für 4 Schalter	3RV1915-1CB	Siemens
Q1.101	200011637	ESJQ3305	2	=ES+S/117.1	bus voltage	für 5 Schalter	3RV1915-1DB	Siemens
Q1.102	200011629	ESJQ3200	1	=ES+S/118.1	power circuit breaker	14 - 20 A	3RV1021-4BA15	Siemens
Q1.102	200011638	ESJQ3306	1	=ES+S/118.1	Connector	Schütz S00 - AC/DC - Leistungsschalter S0	3RA1921-1D	Siemens
Q1.102	200013269	EWOF1200	1	=ES+S/118.1	Busbar connection point	25A / 60mm System 45mm breit (2)	32431	Wöhner
Q2.1	200011625	ESJQ3080	1	=ES+S/119.1	power circuit breaker	5,5 - 8,0 A	3RV1021-1HA15	Siemens
Q2.2	200011625	ESJQ3080	1	=ES+S/120.1	power circuit breaker	5,5 - 8,0 A	3RV1021-1HA15	Siemens
Q2.3	200011625	ESJQ3080	1	=ES+S/121.1	power circuit breaker	5,5 - 8,0 A	3RV1021-1HA15	Siemens
Q2.4	200011625	ESJQ3080	1	=ES+S/122.1	power circuit breaker	5,5 - 8,0 A	3RV1021-1HA15	Siemens

Parts list

electrical construction

Artilelstückliste_Elo_SAP_001

DT	Part number new	Part number old	Quantity	Placement	Designation 1	Designation 2	Order number	Manufacturer
Q2.5	200011625	ESJQ3080	1	=ES+S/123.1	power circuit breaker	5,5 - 8,0 A	3RV1021-1HA15	Siemens
Q2.5	200011633	ESJQ3301	1	=ES+S/123.1	Power supply	6 - 25 qmm	3RV1915-5A	Siemens
Q2.5	200011637	ESJQ3305	3	=ES+S/123.1	bus voltage	für 5 Schalter	3RV1915-1DB	Siemens
Q2.6	200011625	ESJQ3080	1	=ES+S/125.1	power circuit breaker	5,5 - 8,0 A	3RV1021-1HA15	Siemens
Q2.7	200011625	ESJQ3080	1	=ES+S/126.1	power circuit breaker	5,5 - 8,0 A	3RV1021-1HA15	Siemens
Q2.8	200011625	ESJQ3080	1	=ES+S/127.1	power circuit breaker	5,5 - 8,0 A	3RV1021-1HA15	Siemens
Q2.9	200011625	ESJQ3080	1	=ES+S/128.1	power circuit breaker	5,5 - 8,0 A	3RV1021-1HA15	Siemens
Q2.10	200011625	ESJQ3080	1	=ES+S/129.1	power circuit breaker	5,5 - 8,0 A	3RV1021-1HA15	Siemens
Q2.11	200011625	ESJQ3080	1	=ES+S/133.1	power circuit breaker	5,5 - 8,0 A	3RV1021-1HA15	Siemens
Q2.11	200011633	ESJQ3301	1	=ES+S/133.1	Power supply	6 - 25 qmm	3RV1915-5A	Siemens
Q2.11	200011637	ESJQ3305	3	=ES+S/133.1	bus voltage	für 5 Schalter	3RV1915-1DB	Siemens
Q2.12	200011625	ESJQ3080	1	=ES+S/134.1	power circuit breaker	5,5 - 8,0 A	3RV1021-1HA15	Siemens
Q2.13	200011625	ESJQ3080	1	=ES+S/135.1	power circuit breaker	5,5 - 8,0 A	3RV1021-1HA15	Siemens
Q2.14	200011625	ESJQ3080	1	=ES+S/136.1	power circuit breaker	5,5 - 8,0 A	3RV1021-1HA15	Siemens
Q2.15	200011625	ESJQ3080	1	=ES+S/137.1	power circuit breaker	5,5 - 8,0 A	3RV1021-1HA15	Siemens
Q2.16	200011625	ESJQ3080	1	=ES+S/138.1	power circuit breaker	5,5 - 8,0 A	3RV1021-1HA15	Siemens
Q2.17	200011625	ESJQ3080	1	=ES+S/140.1	power circuit breaker	5,5 - 8,0 A	3RV1021-1HA15	Siemens
Q2.17	200011633	ESJQ3301	1	=ES+S/140.1	Power supply	6 - 25 qmm	3RV1915-5A	Siemens
Q2.17	200011636	ESJQ3304	1	=ES+S/140.1	bus voltage	für 4 Schalter	3RV1915-1CB	Siemens
Q2.17	200011637	ESJQ3305	2	=ES+S/140.1	bus voltage	für 5 Schalter	3RV1915-1DB	Siemens
Q2.18	200011625	ESJQ3080	1	=ES+S/141.1	power circuit breaker	5,5 - 8,0 A	3RV1021-1HA15	Siemens
Q2.19	200011625	ESJQ3080	1	=ES+S/142.1	power circuit breaker	5,5 - 8,0 A	3RV1021-1HA15	Siemens
Q2.20	200011625	ESJQ3080	1	=ES+S/143.1	power circuit breaker	5,5 - 8,0 A	3RV1021-1HA15	Siemens
Q2.21	200011625	ESJQ3080	1	=ES+S/144.1	power circuit breaker	5,5 - 8,0 A	3RV1021-1HA15	Siemens
Q2.22	200011625	ESJQ3080	1	=ES+S/145.1	power circuit breaker	5,5 - 8,0 A	3RV1021-1HA15	Siemens
Q2.23	200011625	ESJQ3080	1	=ES+S/147.1	power circuit breaker	5,5 - 8,0 A	3RV1021-1HA15	Siemens
Q2.23	200011633	ESJQ3301	1	=ES+S/147.1	Power supply	6 - 25 qmm	3RV1915-5A	Siemens
Q2.23	200011636	ESJQ3304	1	=ES+S/147.1	bus voltage	für 4 Schalter	3RV1915-1CB	Siemens
Q2.23	200011637	ESJQ3305	2	=ES+S/147.1	bus voltage	für 5 Schalter	3RV1915-1DB	Siemens
Q2.24	200011625	ESJQ3080	1	=ES+S/148.1	power circuit breaker	5,5 - 8,0 A	3RV1021-1HA15	Siemens
Q2.25	200011625	ESJQ3080	1	=ES+S/149.1	power circuit breaker	5,5 - 8,0 A	3RV1021-1HA15	Siemens
Q2.26	200011625	ESJQ3080	1	=ES+S/150.1	power circuit breaker	5,5 - 8,0 A	3RV1021-1HA15	Siemens
Q2.27	200011625	ESJQ3080	1	=ES+S/151.1	power circuit breaker	5,5 - 8,0 A	3RV1021-1HA15	Siemens
Q2.28	200011625	ESJQ3080	1	=ES+S/152.1	power circuit breaker	5,5 - 8,0 A	3RV1021-1HA15	Siemens
Q2.29	200011625	ESJQ3080	1	=ES+S/154.1	power circuit breaker	5,5 - 8,0 A	3RV1021-1HA15	Siemens
Q2.29	200011633	ESJQ3301	1	=ES+S/154.1	Power supply	6 - 25 qmm	3RV1915-5A	Siemens
Q2.29	200011637	ESJQ3305	3	=ES+S/154.1	bus voltage	für 5 Schalter	3RV1915-1DB	Siemens
Q2.30	200011625	ESJQ3080	1	=ES+S/155.1	power circuit breaker	5,5 - 8,0 A	3RV1021-1HA15	Siemens

Parts list

electrical construction

Artilelstückliste_Elo_SAP_001

DT	Part number new	Part number old	Quantity	Placement	Designation 1	Designation 2	Order number	Manufacturer
Q2.31	200011625	ESJQ3080	1	=ES+S/156.1	power circuit breaker	5,5 - 8,0 A	3RV1021-1HA15	Siemens
Q2.32	200011625	ESJQ3080	1	=ES+S/157.1	power circuit breaker	5,5 - 8,0 A	3RV1021-1HA15	Siemens
Q2.33	200011625	ESJQ3080	1	=ES+S/158.1	power circuit breaker	5,5 - 8,0 A	3RV1021-1HA15	Siemens
Q2.34	200011625	ESJQ3080	1	=ES+S/159.1	power circuit breaker	5,5 - 8,0 A	3RV1021-1HA15	Siemens
Q2.35	200011625	ESJQ3080	1	=ES+S/161.1	power circuit breaker	5,5 - 8,0 A	3RV1021-1HA15	Siemens
Q2.35	200011633	ESJQ3301	1	=ES+S/161.1	Power supply	6 - 25 qmm	3RV1915-5A	Siemens
Q2.35	200011636	ESJQ3304	1	=ES+S/161.1	bus voltage	für 4 Schalter	3RV1915-1CB	Siemens
Q2.35	200011637	ESJQ3305	2	=ES+S/161.1	bus voltage	für 5 Schalter	3RV1915-1DB	Siemens
Q2.36	200011625	ESJQ3080	1	=ES+S/162.1	power circuit breaker	5,5 - 8,0 A	3RV1021-1HA15	Siemens
Q2.37	200011625	ESJQ3080	1	=ES+S/163.1	power circuit breaker	5,5 - 8,0 A	3RV1021-1HA15	Siemens
Q2.38	200011625	ESJQ3080	1	=ES+S/164.1	power circuit breaker	5,5 - 8,0 A	3RV1021-1HA15	Siemens
Q2.39	200011625	ESJQ3080	1	=ES+S/165.1	power circuit breaker	5,5 - 8,0 A	3RV1021-1HA15	Siemens
Q2.40	200011625	ESJQ3080	1	=ES+S/166.1	power circuit breaker	5,5 - 8,0 A	3RV1021-1HA15	Siemens
Q2.41	200011625	ESJQ3080	1	=ES+S/168.1	power circuit breaker	5,5 - 8,0 A	3RV1021-1HA15	Siemens
Q2.41	200011633	ESJQ3301	1	=ES+S/168.1	Power supply	6 - 25 qmm	3RV1915-5A	Siemens
Q2.41	200011636	ESJQ3304	1	=ES+S/168.1	bus voltage	für 4 Schalter	3RV1915-1CB	Siemens
Q2.41	200011637	ESJQ3305	2	=ES+S/168.1	bus voltage	für 5 Schalter	3RV1915-1DB	Siemens
Q2.42	200011625	ESJQ3080	1	=ES+S/169.1	power circuit breaker	5,5 - 8,0 A	3RV1021-1HA15	Siemens
Q2.43	200011625	ESJQ3080	1	=ES+S/170.1	power circuit breaker	5,5 - 8,0 A	3RV1021-1HA15	Siemens
Q2.44	200011625	ESJQ3080	1	=ES+S/171.1	power circuit breaker	5,5 - 8,0 A	3RV1021-1HA15	Siemens
Q2.45	200011625	ESJQ3080	1	=ES+S/172.1	power circuit breaker	5,5 - 8,0 A	3RV1021-1HA15	Siemens
Q2.46	200011625	ESJQ3080	1	=ES+S/173.1	power circuit breaker	5,5 - 8,0 A	3RV1021-1HA15	Siemens
Q2.47	200011625	ESJQ3080	1	=ES+S/175.1	power circuit breaker	5,5 - 8,0 A	3RV1021-1HA15	Siemens
Q2.47	200011633	ESJQ3301	1	=ES+S/175.1	Power supply	6 - 25 qmm	3RV1915-5A	Siemens
Q2.47	200011637	ESJQ3305	3	=ES+S/175.1	bus voltage	für 5 Schalter	3RV1915-1DB	Siemens
Q2.48	200011625	ESJQ3080	1	=ES+S/176.1	power circuit breaker	5,5 - 8,0 A	3RV1021-1HA15	Siemens
Q2.49	200011625	ESJQ3080	1	=ES+S/177.1	power circuit breaker	5,5 - 8,0 A	3RV1021-1HA15	Siemens
Q2.50	200011625	ESJQ3080	1	=ES+S/178.1	power circuit breaker	5,5 - 8,0 A	3RV1021-1HA15	Siemens
Q2.51	200011625	ESJQ3080	1	=ES+S/179.1	power circuit breaker	5,5 - 8,0 A	3RV1021-1HA15	Siemens
Q2.52	200011625	ESJQ3080	1	=ES+S/180.1	power circuit breaker	5,5 - 8,0 A	3RV1021-1HA15	Siemens
Q2.53	200011625	ESJQ3080	1	=ES+S/182.1	power circuit breaker	5,5 - 8,0 A	3RV1021-1HA15	Siemens
Q2.53	200011633	ESJQ3301	1	=ES+S/182.1	Power supply	6 - 25 qmm	3RV1915-5A	Siemens
Q2.53	200011636	ESJQ3304	1	=ES+S/182.1	bus voltage	für 4 Schalter	3RV1915-1CB	Siemens
Q2.53	200011637	ESJQ3305	2	=ES+S/182.1	bus voltage	für 5 Schalter	3RV1915-1DB	Siemens
Q2.54	200011625	ESJQ3080	1	=ES+S/183.1	power circuit breaker	5,5 - 8,0 A	3RV1021-1HA15	Siemens
Q2.55	200011625	ESJQ3080	1	=ES+S/184.1	power circuit breaker	5,5 - 8,0 A	3RV1021-1HA15	Siemens
Q2.56	200011625	ESJQ3080	1	=ES+S/185.1	power circuit breaker	5,5 - 8,0 A	3RV1021-1HA15	Siemens
Q2.57	200011625	ESJQ3080	1	=ES+S/186.1	power circuit breaker	5,5 - 8,0 A	3RV1021-1HA15	Siemens

Parts list

electrical construction

Artilelstückliste_Elo_SAP_001

DT	Part number new	Part number old	Quantity	Placement	Designation 1	Designation 2	Order number	Manufacturer
Q2.58	200011625	ESJQ3080	1	=ES+S/187.1	power circuit breaker	5,5 - 8,0 A	3RV1021-1HA15	Siemens
Q2.59	200011625	ESJQ3080	1	=ES+S/189.1	power circuit breaker	5,5 - 8,0 A	3RV1021-1HA15	Siemens
Q2.59	200011633	ESJQ3301	1	=ES+S/189.1	Power supply	6 - 25 qmm	3RV1915-5A	Siemens
Q2.59	200011635	ESJQ3303	1	=ES+S/189.1	bus voltage	für 3 Schalter	3RV1915-1BB	Siemens
Q2.59	200011637	ESJQ3305	2	=ES+S/189.1	bus voltage	für 5 Schalter	3RV1915-1DB	Siemens
Q2.60	200011625	ESJQ3080	1	=ES+S/190.1	power circuit breaker	5,5 - 8,0 A	3RV1021-1HA15	Siemens
Q2.61	200011625	ESJQ3080	1	=ES+S/191.1	power circuit breaker	5,5 - 8,0 A	3RV1021-1HA15	Siemens
Q2.62	200011625	ESJQ3080	1	=ES+S/192.1	power circuit breaker	5,5 - 8,0 A	3RV1021-1HA15	Siemens
Q2.63	200011625	ESJQ3080	1	=ES+S/193.1	power circuit breaker	5,5 - 8,0 A	3RV1021-1HA15	Siemens
Q3.1	200011622	ESJQ3040	1	=ES+S/196.1	power circuit breaker	2,8 - 4,0 A	3RV1021-1EA15	Siemens
Q3.1	200011638	ESJQ3306	1	=ES+S/196.1	Connector	Schütz S00 - AC/DC - Leistungsschalter S0	3RA1921-1D	Siemens
Q3.1	200013269	EWOF1200	1	=ES+S/196.1	Busbar connection point	25A / 60mm System 45mm breit (2)	32431	Wöhner
Q3.2	200011622	ESJQ3040	1	=ES+S/196.3	power circuit breaker	2,8 - 4,0 A	3RV1021-1EA15	Siemens
Q3.2	200011638	ESJQ3306	1	=ES+S/196.3	Connector	Schütz S00 - AC/DC - Leistungsschalter S0	3RA1921-1D	Siemens
Q3.2	200013269	EWOF1200	1	=ES+S/196.3	Busbar connection point	25A / 60mm System 45mm breit (2)	32431	Wöhner
Q3.4	200011627	ESJQ3125	1	=ES+S/196.4	power circuit breaker	9,0 - 12,5 A	3RV1021-1KA15	Siemens
Q3.4	200011640	ESJQ3308	1	=ES+S/196.4	Connector	Schütz S0 - DC - Leistungsschalter S0	3RA1921-1B	Siemens
Q3.4	200013269	EWOF1200	1	=ES+S/196.4	Busbar connection point	25A / 60mm System 45mm breit (2)	32431	Wöhner
Q3.5	200011657	ESJQ3400	1	=ES+S/196.6	power circuit breaker	28 - 40 A	3RV1031-4FA10	Siemens
Q3.5	200011647	ESJQ3315	1	=ES+S/196.6	Connector	Schütz S2 - DC - Leistungsschalter S2	3RA1931-1B	Siemens
Q3.5	200013270	EWOF1201	1	=ES+S/196.6	Busbar connection point	63A / 60mm System 54mm breit f. Siemens S2	32455	Wöhner
Q3.5	200011491	ESJK0002	2	=ES+S/196.6	Terminals Cover	für Schütz S2	3RT1936-4EA2	Siemens
Q3.5	200011644	ESJQ3312	1	=ES+S/196.6	auxiliary contact	querliegend	3RV1901-1E	Siemens
Q4.1	200011626	ESJQ3100	1	=ES+S/197.1	power circuit breaker	7,0 - 10,0 A	3RV1021-1JA15	Siemens
Q4.1	200011638	ESJQ3306	1	=ES+S/197.1	Connector	Schütz S00 - AC/DC - Leistungsschalter S0	3RA1921-1D	Siemens
Q4.1	200013269	EWOF1200	1	=ES+S/197.1	Busbar connection point	25A / 60mm System 45mm breit (2)	32431	Wöhner
Q4.2	200011625	ESJQ3080	1	=ES+S/197.3	power circuit breaker	5,5 - 8,0 A	3RV1021-1HA15	Siemens
Q4.2	200011638	ESJQ3306	1	=ES+S/197.3	Connector	Schütz S00 - AC/DC - Leistungsschalter S0	3RA1921-1D	Siemens
Q4.2	200013269	EWOF1200	1	=ES+S/197.3	Busbar connection point	25A / 60mm System 45mm breit (2)	32431	Wöhner
Q4.3	200011622	ESJQ3040	1	=ES+S/197.4	power circuit breaker	2,8 - 4,0 A	3RV1021-1EA15	Siemens
Q4.3	200011638	ESJQ3306	1	=ES+S/197.4	Connector	Schütz S00 - AC/DC - Leistungsschalter S0	3RA1921-1D	Siemens
Q4.3	200013269	EWOF1200	1	=ES+S/197.4	Busbar connection point	25A / 60mm System 45mm breit (2)	32431	Wöhner
Q4.4	200011627	ESJQ3125	1	=ES+S/197.6	power circuit breaker	9,0 - 12,5 A	3RV1021-1KA15	Siemens
Q4.4	200011640	ESJQ3308	1	=ES+S/197.6	Connector	Schütz S0 - DC - Leistungsschalter S0	3RA1921-1B	Siemens
Q4.4	200013269	EWOF1200	1	=ES+S/197.6	Busbar connection point	25A / 60mm System 45mm breit (2)	32431	Wöhner
Q7	200011661	ESJQ3750	1	=ES+S/198.1	power circuit breaker	57 - 75 A	3RV1041-4KA10	Siemens
Q7	200011492	ESJK0003	1	=ES+S/198.1	Terminals Cover	für Schütz S3	3RT1946-4EA2	Siemens
Q7	200011644	ESJQ3312	1	=ES+S/198.1	auxiliary contact	querliegend	3RV1901-1E	Siemens

Parts list

electrical construction

Artilelstückliste_Elo_SAP_001

DT	Part number new	Part number old	Quantity	Placement	Designation 1	Designation 2	Order number	Manufacturer
Q7	200013271	EWOF1202	1	=ES+S/198.1	Busbar connection point	100A / 60mm System 70mm breit	32226	Wöhner
Q7.2	200011616	ESJQ3010	1	=ES+S/198.4	power circuit breaker	0,70 - 1,00 A	3RV1021-0JA15	Siemens
Q7.2	200011638	ESJQ3306	1	=ES+S/198.4	Connector	Schütz S00 - AC/DC - Leistungsschalter S0	3RA1921-1D	Siemens
Q7.2	200013269	EWOF1200	1	=ES+S/198.4	Busbar connection point	25A / 60mm System 45mm breit (2)	32431	Wöhner
Q7.4	200011621	ESJQ3032	1	=ES+S/198.6	power circuit breaker	2,2 - 3,2 A	3RV1021-1DA15	Siemens
Q7.4	200011638	ESJQ3306	1	=ES+S/198.6	Connector	Schütz S00 - AC/DC - Leistungsschalter S0	3RA1921-1D	Siemens
Q7.4	200013269	EWOF1200	1	=ES+S/198.6	Busbar connection point	25A / 60mm System 45mm breit (2)	32431	Wöhner
Q8.1	200011628	ESJQ3160	1	=ES+S/199.1	power circuit breaker	11 - 16 A	3RV1021-4AA15	Siemens
Q8.1	200011640	ESJQ3308	1	=ES+S/199.1	Connector	Schütz S0 - DC - Leistungsschalter S0	3RA1921-1B	Siemens
Q8.1	200013269	EWOF1200	1	=ES+S/199.1	Busbar connection point	25A / 60mm System 45mm breit (2)	32431	Wöhner
Q8.2	200011628	ESJQ3160	1	=ES+S/199.3	power circuit breaker	11 - 16 A	3RV1021-4AA15	Siemens
Q8.2	200011640	ESJQ3308	1	=ES+S/199.3	Connector	Schütz S0 - DC - Leistungsschalter S0	3RA1921-1B	Siemens
Q8.2	200013269	EWOF1200	1	=ES+S/199.3	Busbar connection point	25A / 60mm System 45mm breit (2)	32431	Wöhner
Q8.3	200011631	ESJQ3250	1	=ES+S/199.4	power circuit breaker	20 - 25 A	3RV1021-4DA15	Siemens
Q8.3	200011640	ESJQ3308	1	=ES+S/199.4	Connector	Schütz S0 - DC - Leistungsschalter S0	3RA1921-1B	Siemens
Q8.3	200013269	EWOF1200	1	=ES+S/199.4	Busbar connection point	25A / 60mm System 45mm breit (2)	32431	Wöhner
Q8.4	200011622	ESJQ3040	1	=ES+S/199.6	power circuit breaker	2,8 - 4,0 A	3RV1021-1EA15	Siemens
Q8.4	200011638	ESJQ3306	1	=ES+S/199.6	Connector	Schütz S00 - AC/DC - Leistungsschalter S0	3RA1921-1D	Siemens
Q8.4	200013269	EWOF1200	1	=ES+S/199.6	Busbar connection point	25A / 60mm System 45mm breit (2)	32431	Wöhner
Q8.4	200011505	ESJK0301	1	=ES+S/199.6	Connection	Größe S00 phasengleich	3RA1913-3D	Siemens
Q8.4	200011506	ESJK0302	1	=ES+S/199.6	Connection	Größe S00 phasentausch	3RA1913-2A	Siemens
Q8.4	200013273	EWOF1210	1	=ES+S/199.6	Busbar connection point	32A / 60mm System 45mm / ohne Leitung	32486	Wöhner
Q9	200011662	ESJQ3900	1	=ES+S/200.1	power circuit breaker	70 - 90 A	3RV1041-4LA10	Siemens
Q9	200011492	ESJK0003	1	=ES+S/200.1	Terminals Cover	für Schütz S3	3RT1946-4EA2	Siemens
Q9	200011644	ESJQ3312	1	=ES+S/200.1	auxiliary contact	querliegend	3RV1901-1E	Siemens
Q9	200013271	EWOF1202	1	=ES+S/200.1	Busbar connection point	100A / 60mm System 70mm breit	32226	Wöhner
Q10	200011662	ESJQ3900	1	=ES+S/201.1	power circuit breaker	70 - 90 A	3RV1041-4LA10	Siemens
Q10	200011492	ESJK0003	1	=ES+S/201.1	Terminals Cover	für Schütz S3	3RT1946-4EA2	Siemens
Q10	200011644	ESJQ3312	1	=ES+S/201.1	auxiliary contact	querliegend	3RV1901-1E	Siemens
Q10	200013271	EWOF1202	1	=ES+S/201.1	Busbar connection point	100A / 60mm System 70mm breit	32226	Wöhner
Q11	200011662	ESJQ3900	1	=ES+S/202.1	power circuit breaker	70 - 90 A	3RV1041-4LA10	Siemens
Q11	200011492	ESJK0003	1	=ES+S/202.1	Terminals Cover	für Schütz S3	3RT1946-4EA2	Siemens
Q11	200011644	ESJQ3312	1	=ES+S/202.1	auxiliary contact	querliegend	3RV1901-1E	Siemens
Q11	200013271	EWOF1202	1	=ES+S/202.1	Busbar connection point	100A / 60mm System 70mm breit	32226	Wöhner
Q12	200011662	ESJQ3900	1	=ES+S/203.1	power circuit breaker	70 - 90 A	3RV1041-4LA10	Siemens
Q12	200011492	ESJK0003	1	=ES+S/203.1	Terminals Cover	für Schütz S3	3RT1946-4EA2	Siemens
Q12	200011644	ESJQ3312	1	=ES+S/203.1	auxiliary contact	querliegend	3RV1901-1E	Siemens
Q12	200013271	EWOF1202	1	=ES+S/203.1	Busbar connection point	100A / 60mm System 70mm breit	32226	Wöhner

Parts list

electrical construction

Artilelstückliste_Elo_SAP_001

DT	Part number new	Part number old	Quantity	Placement	Designation 1	Designation 2	Order number	Manufacturer
Q13	200011662	ESJQ3900	1	=ES+S/204.1	power circuit breaker	70 - 90 A	3RV1041-4LA10	Siemens
Q13	200011492	ESJK0003	1	=ES+S/204.1	Terminals Cover	für Schütz S3	3RT1946-4EA2	Siemens
Q13	200011644	ESJQ3312	1	=ES+S/204.1	auxiliary contact	querliegend	3RV1901-1E	Siemens
Q13	200013271	EWOF1202	1	=ES+S/204.1	Busbar connection point	100A / 60mm System 70mm breit	32226	Wöhner
Q14	200011662	ESJQ3900	1	=ES+S/205.1	power circuit breaker	70 - 90 A	3RV1041-4LA10	Siemens
Q14	200011492	ESJK0003	1	=ES+S/205.1	Terminals Cover	für Schütz S3	3RT1946-4EA2	Siemens
Q14	200011644	ESJQ3312	1	=ES+S/205.1	auxiliary contact	querliegend	3RV1901-1E	Siemens
Q14	200013271	EWOF1202	1	=ES+S/205.1	Busbar connection point	100A / 60mm System 70mm breit	32226	Wöhner
Q15	200011662	ESJQ3900	1	=ES+S/206.1	power circuit breaker	70 - 90 A	3RV1041-4LA10	Siemens
Q15	200011492	ESJK0003	1	=ES+S/206.1	Terminals Cover	für Schütz S3	3RT1946-4EA2	Siemens
Q15	200011644	ESJQ3312	1	=ES+S/206.1	auxiliary contact	querliegend	3RV1901-1E	Siemens
Q15	200013271	EWOF1202	1	=ES+S/206.1	Busbar connection point	100A / 60mm System 70mm breit	32226	Wöhner
Q16	200011662	ESJQ3900	1	=ES+S/207.1	power circuit breaker	70 - 90 A	3RV1041-4LA10	Siemens
Q16	200011492	ESJK0003	1	=ES+S/207.1	Terminals Cover	für Schütz S3	3RT1946-4EA2	Siemens
Q16	200011644	ESJQ3312	1	=ES+S/207.1	auxiliary contact	querliegend	3RV1901-1E	Siemens
Q16	200013271	EWOF1202	1	=ES+S/207.1	Busbar connection point	100A / 60mm System 70mm breit	32226	Wöhner
Q31	200011628	ESJQ3160	1	=ES+S/208.1	power circuit breaker	11 - 16 A	3RV1021-4AA15	Siemens
Q31	200011640	ESJQ3308	1	=ES+S/208.1	Connector	Schütz S0 - DC - Leistungsschalter S0	3RA1921-1B	Siemens
Q31	200013269	EWOF1200	1	=ES+S/208.1	Busbar connection point	25A / 60mm System 45mm breit (2)	32431	Wöhner
Q41	200011625	ESJQ3080	1	=ES+S/209.1	power circuit breaker	5,5 - 8,0 A	3RV1021-1HA15	Siemens
Q41	200011638	ESJQ3306	1	=ES+S/209.1	Connector	Schütz S00 - AC/DC - Leistungsschalter S0	3RA1921-1D	Siemens
Q41	200013269	EWOF1200	1	=ES+S/209.1	Busbar connection point	25A / 60mm System 45mm breit (2)	32431	Wöhner
QA4.1	200011558	ESJK9304	1	=ES+S/291.2	power contactor	4kW / 24 VDC / 1S	3RT1016-1BB41	Siemens
QA4.1	200011692	ESJZ9100	1	=ES+S/291.2	RC network	S00 / 24V AC/DC	3RT19 16-1CB00	Siemens
QA4.2	200011558	ESJK9304	1	=ES+S/291.3	power contactor	4kW / 24 VDC / 1S	3RT1016-1BB41	Siemens
QA4.2	200011692	ESJZ9100	1	=ES+S/291.3	RC network	S00 / 24V AC/DC	3RT19 16-1CB00	Siemens
QA5.0	200011558	ESJK9304	1	=ES+S/292.1	power contactor	4kW / 24 VDC / 1S	3RT1016-1BB41	Siemens
QA5.0	200011692	ESJZ9100	1	=ES+S/292.1	RC network	S00 / 24V AC/DC	3RT19 16-1CB00	Siemens
QA5.1	200011558	ESJK9304	1	=ES+S/292.2	power contactor	4kW / 24 VDC / 1S	3RT1016-1BB41	Siemens
QA5.1	200011692	ESJZ9100	1	=ES+S/292.2	RC network	S00 / 24V AC/DC	3RT19 16-1CB00	Siemens
QA5.2	200011559	ESJK9305	1	=ES+S/292.3	power contactor	5,5kW / 24 VDC	3RT1024-1BB40	Siemens
QA5.2	200011693	ESJZ9101	1	=ES+S/292.3	RC network	S0 / 24V AC/DC	3RT19 26-1CB00	Siemens
QA5.4	200011558	ESJK9304	1	=ES+S/292.5	power contactor	4kW / 24 VDC / 1S	3RT1016-1BB41	Siemens
QA5.4	200011692	ESJZ9100	1	=ES+S/292.5	RC network	S00 / 24V AC/DC	3RT19 16-1CB00	Siemens
QA5.5	200011558	ESJK9304	1	=ES+S/292.6	power contactor	4kW / 24 VDC / 1S	3RT1016-1BB41	Siemens
QA5.5	200011692	ESJZ9100	1	=ES+S/292.6	RC network	S00 / 24V AC/DC	3RT19 16-1CB00	Siemens
QA5.6	200011558	ESJK9304	1	=ES+S/292.7	power contactor	4kW / 24 VDC / 1S	3RT1016-1BB41	Siemens
QA5.6	200011692	ESJZ9100	1	=ES+S/292.7	RC network	S00 / 24V AC/DC	3RT19 16-1CB00	Siemens

Parts list

electrical construction

Artilelstückliste_Elo_SAP_001

DT	Part number new	Part number old	Quantity	Placement	Designation 1	Designation 2	Order number	Manufacturer
QA5.7	200011559	ESJK9305	1	=ES+S/292.8	power contactor	5,5kW / 24 VDC	3RT1024-1BB40	Siemens
QA5.7	200011693	ESJZ9101	1	=ES+S/292.8	RC network	S0 / 24V AC/DC	3RT19 26-1CB00	Siemens
QA16.0	200011560	ESJK9307	1	=ES+S/297.1	power contactor	7,5kW / 24 VDC	3RT1025-1BB40	Siemens
QA16.0	200011693	ESJZ9101	1	=ES+S/297.1	RC network	S0 / 24V AC/DC	3RT19 26-1CB00	Siemens
QA16.1	200011560	ESJK9307	1	=ES+S/297.2	power contactor	7,5kW / 24 VDC	3RT1025-1BB40	Siemens
QA16.1	200011693	ESJZ9101	1	=ES+S/297.2	RC network	S0 / 24V AC/DC	3RT19 26-1CB00	Siemens
QA16.2	200011561	ESJK9311	1	=ES+S/297.3	power contactor	11kW / 24 VDC	3RT1026-1BB40	Siemens
QA16.2	200011693	ESJZ9101	1	=ES+S/297.3	RC network	S0 / 24V AC/DC	3RT19 26-1CB00	Siemens
QA16.2	200011503	ESJK0131	1	=ES+S/297.3	auxiliary block	LS (S0-S12) / 3S+1Ö	3RH1921-1HA31	Siemens
QA16.3	200011558	ESJK9304	1	=ES+S/297.4	power contactor	4kW / 24 VDC / 1S	3RT1016-1BB41	Siemens
QA16.3	200011501	ESJK0122	1	=ES+S/297.4	auxiliary block	LS (S00) / 2S+2Ö	3RH1911-1HA22	Siemens
QA16.3	200011692	ESJZ9100	1	=ES+S/297.4	RC network	S00 / 24V AC/DC	3RT19 16-1CB00	Siemens
QA16.4	200011558	ESJK9304	1	=ES+S/297.5	power contactor	4kW / 24 VDC / 1S	3RT1016-1BB41	Siemens
QA16.4	200011501	ESJK0122	1	=ES+S/297.5	auxiliary block	LS (S00) / 2S+2Ö	3RH1911-1HA22	Siemens
QA16.4	200011692	ESJZ9100	1	=ES+S/297.5	RC network	S00 / 24V AC/DC	3RT19 16-1CB00	Siemens
QA17.0	200011560	ESJK9307	1	=ES+S/298.0	power contactor	7,5kW / 24 VDC	3RT1025-1BB40	Siemens
QA17.0	200011693	ESJZ9101	1	=ES+S/298.0	RC network	S0 / 24V AC/DC	3RT19 26-1CB00	Siemens
QA17.1	200011558	ESJK9304	1	=ES+S/298.2	power contactor	4kW / 24 VDC / 1S	3RT1016-1BB41	Siemens
QA17.1	200011692	ESJZ9100	1	=ES+S/298.2	RC network	S00 / 24V AC/DC	3RT19 16-1CB00	Siemens
QA24.0	200011558	ESJK9304	1	=ES+S/305.1	power contactor	4kW / 24 VDC / 1S	3RT1016-1BB41	Siemens
QA24.0	200011692	ESJZ9100	1	=ES+S/305.1	RC network	S00 / 24V AC/DC	3RT19 16-1CB00	Siemens
QEM3.1	200027849	EDSQ9021	1	=ES+S/196.1	maintenance switch	mit Hilfsschalter	KG 10 / T203/40KS51V	Deutsche Solenoid
QEM3.2	200027849	EDSQ9021	1	=ES+S/196.3	maintenance switch	mit Hilfsschalter	KG 10 / T203/40KS51V	Deutsche Solenoid
QEM3.4	200027849	EDSQ9021	1	=ES+S/196.4	maintenance switch	mit Hilfsschalter	KG 10 / T203/40KS51V	Deutsche Solenoid
QEM3.5	200005805	EDSQ9040	1	=ES+S/196.6	maintenance switch	mit Hilfsschalter	KG 41B T206/40 KL71V	Deutsche Solenoid
QEM4.1	200027849	EDSQ9021	1	=ES+S/197.1	maintenance switch	mit Hilfsschalter	KG 10 / T203/40KS51V	Deutsche Solenoid
QEM4.2	200027849	EDSQ9021	1	=ES+S/197.3	maintenance switch	mit Hilfsschalter	KG 10 / T203/40KS51V	Deutsche Solenoid
QEM4.3	200027849	EDSQ9021	1	=ES+S/197.4	maintenance switch	mit Hilfsschalter	KG 10 / T203/40KS51V	Deutsche Solenoid
QEM4.4	200027849	EDSQ9021	1	=ES+S/197.6	maintenance switch	mit Hilfsschalter	KG 10 / T203/40KS51V	Deutsche Solenoid
QEM7	200027853	EDSQ9101	1	=ES+S/198.1	maintenance switch	mit Hilfsschalter	KG 100-T203/40 KL71V	Deutsche Solenoid
QEM7.2	200027849	EDSQ9021	1	=ES+S/198.4	maintenance switch	mit Hilfsschalter	KG 10 / T203/40KS51V	Deutsche Solenoid
QEM7.4	200027849	EDSQ9021	1	=ES+S/198.6	maintenance switch	mit Hilfsschalter	KG 10 / T203/40KS51V	Deutsche Solenoid
QEM8.1	200005804	EDSQ9032	1	=ES+S/199.1	maintenance switch	mit Hilfsschalter	KG 32-T203/40 KL51V	Deutsche Solenoid
QEM8.2	200005804	EDSQ9032	1	=ES+S/199.3	maintenance switch	mit Hilfsschalter	KG 32-T203/40 KL51V	Deutsche Solenoid
QEM8.3	200005804	EDSQ9032	1	=ES+S/199.4	maintenance switch	mit Hilfsschalter	KG 32-T203/40 KL51V	Deutsche Solenoid
QEM8.4	200028869	EDSQ9022	1	=ES+S/199.6	maintenance switch	mit Hilfsschalter	KG 10 / T206/40KS51V	Deutsche Solenoid
QEM9	200027854	EDSQ9102	1	=ES+S/200.1	maintenance switch	mit Hilfsschalter	KG 100-T203/D-A120 KL71V	Deutsche Solenoid
QEM10	200027854	EDSQ9102	1	=ES+S/201.1	maintenance switch	mit Hilfsschalter	KG 100-T203/D-A120 KL71V	Deutsche Solenoid

Parts list

electrical construction

Artilelstückliste_Elo_SAP_001

DT	Part number new	Part number old	Quantity	Placement	Designation 1	Designation 2	Order number	Manufacturer
QEM11	200027854	EDSQ9102	1	=ES+S/202.1	maintenance switch	mit Hilfsschalter	KG 100-T203/D-A120 KL71V	Deutsche Solenoid
QEM12	200027854	EDSQ9102	1	=ES+S/203.1	maintenance switch	mit Hilfsschalter	KG 100-T203/D-A120 KL71V	Deutsche Solenoid
QEM13	200027854	EDSQ9102	1	=ES+S/204.1	maintenance switch	mit Hilfsschalter	KG 100-T203/D-A120 KL71V	Deutsche Solenoid
QEM14	200027854	EDSQ9102	1	=ES+S/205.1	maintenance switch	mit Hilfsschalter	KG 100-T203/D-A120 KL71V	Deutsche Solenoid
QEM15	200027854	EDSQ9102	1	=ES+S/206.1	maintenance switch	mit Hilfsschalter	KG 100-T203/D-A120 KL71V	Deutsche Solenoid
QEM16	200027854	EDSQ9102	1	=ES+S/207.1	maintenance switch	mit Hilfsschalter	KG 100-T203/D-A120 KL71V	Deutsche Solenoid
QEM31	200005804	EDSQ9032	1	=ES+S/208.1	maintenance switch	mit Hilfsschalter	KG 32-T203/40 KL51V	Deutsche Solenoid
QEM41	200027849	EDSQ9021	1	=ES+S/209.1	maintenance switch	mit Hilfsschalter	KG 10 / T203/40KS51V	Deutsche Solenoid
QFH1	200011558	ESJK9304	1	=ES+S/285.7	power contactor	4kW / 24 VDC / 1S	3RT1016-1BB41	Siemens
QFH1	200011692	ESJZ9100	1	=ES+S/285.7	RC network	S00 / 24V AC/DC	3RT19 16-1CB00	Siemens
QFH2	200011558	ESJK9304	1	=ES+S/285.8	power contactor	4kW / 24 VDC / 1S	3RT1016-1BB41	Siemens
QFH2	200011692	ESJZ9100	1	=ES+S/285.8	RC network	S00 / 24V AC/DC	3RT19 16-1CB00	Siemens
QISO0	200011625	ESJQ3080	1	=ES+S/1.1	power circuit breaker	5,5 - 8,0 A	3RV1021-1HA15	Siemens
QL1.1	200011609	ESJQ3001	1	=ES+S/3.8	power circuit breaker	0,11 - 0,16 A	3RV1021-0AA15	Siemens
QL1.2	200011609	ESJQ3001	1	=ES+S/4.8	power circuit breaker	0,11 - 0,16 A	3RV1021-0AA15	Siemens
QL1.3	200011609	ESJQ3001	1	=ES+S/5.8	power circuit breaker	0,11 - 0,16 A	3RV1021-0AA15	Siemens
QL1.4	200011609	ESJQ3001	1	=ES+S/6.8	power circuit breaker	0,11 - 0,16 A	3RV1021-0AA15	Siemens
QL1.5	200011609	ESJQ3001	1	=ES+S/7.8	power circuit breaker	0,11 - 0,16 A	3RV1021-0AA15	Siemens
QL1.6	200011609	ESJQ3001	1	=ES+S/8.8	power circuit breaker	0,11 - 0,16 A	3RV1021-0AA15	Siemens
QL1.7	200011609	ESJQ3001	1	=ES+S/10.8	power circuit breaker	0,11 - 0,16 A	3RV1021-0AA15	Siemens
QL1.8	200011609	ESJQ3001	1	=ES+S/11.8	power circuit breaker	0,11 - 0,16 A	3RV1021-0AA15	Siemens
QL1.9	200011609	ESJQ3001	1	=ES+S/12.8	power circuit breaker	0,11 - 0,16 A	3RV1021-0AA15	Siemens
QL1.10	200011609	ESJQ3001	1	=ES+S/13.8	power circuit breaker	0,11 - 0,16 A	3RV1021-0AA15	Siemens
QL1.11	200011609	ESJQ3001	1	=ES+S/14.8	power circuit breaker	0,11 - 0,16 A	3RV1021-0AA15	Siemens
QL1.12	200011609	ESJQ3001	1	=ES+S/15.8	power circuit breaker	0,11 - 0,16 A	3RV1021-0AA15	Siemens
QL1.13	200011609	ESJQ3001	1	=ES+S/17.8	power circuit breaker	0,11 - 0,16 A	3RV1021-0AA15	Siemens
QL1.14	200011609	ESJQ3001	1	=ES+S/18.8	power circuit breaker	0,11 - 0,16 A	3RV1021-0AA15	Siemens
QL1.15	200011609	ESJQ3001	1	=ES+S/19.8	power circuit breaker	0,11 - 0,16 A	3RV1021-0AA15	Siemens
QL1.16	200011609	ESJQ3001	1	=ES+S/20.8	power circuit breaker	0,11 - 0,16 A	3RV1021-0AA15	Siemens
QL1.17	200011609	ESJQ3001	1	=ES+S/21.8	power circuit breaker	0,11 - 0,16 A	3RV1021-0AA15	Siemens
QL1.18	200011609	ESJQ3001	1	=ES+S/22.8	power circuit breaker	0,11 - 0,16 A	3RV1021-0AA15	Siemens
QL1.19	200011609	ESJQ3001	1	=ES+S/24.8	power circuit breaker	0,11 - 0,16 A	3RV1021-0AA15	Siemens
QL1.20	200011609	ESJQ3001	1	=ES+S/25.8	power circuit breaker	0,11 - 0,16 A	3RV1021-0AA15	Siemens
QL1.21	200011609	ESJQ3001	1	=ES+S/26.8	power circuit breaker	0,11 - 0,16 A	3RV1021-0AA15	Siemens
QL1.22	200011609	ESJQ3001	1	=ES+S/27.8	power circuit breaker	0,11 - 0,16 A	3RV1021-0AA15	Siemens
QL1.23	200011609	ESJQ3001	1	=ES+S/28.8	power circuit breaker	0,11 - 0,16 A	3RV1021-0AA15	Siemens
QL1.24	200011609	ESJQ3001	1	=ES+S/29.8	power circuit breaker	0,11 - 0,16 A	3RV1021-0AA15	Siemens
QL1.25	200011609	ESJQ3001	1	=ES+S/31.8	power circuit breaker	0,11 - 0,16 A	3RV1021-0AA15	Siemens

Parts list

electrical construction

Artilelstückliste_Elo_SAP_001

DT	Part number new	Part number old	Quantity	Placement	Designation 1	Designation 2	Order number	Manufacturer
QL1.26	200011609	ESJQ3001	1	=ES+S/32.8	power circuit breaker	0,11 - 0,16 A	3RV1021-0AA15	Siemens
QL1.27	200011609	ESJQ3001	1	=ES+S/33.8	power circuit breaker	0,11 - 0,16 A	3RV1021-0AA15	Siemens
QL1.28	200011609	ESJQ3001	1	=ES+S/34.8	power circuit breaker	0,11 - 0,16 A	3RV1021-0AA15	Siemens
QL1.29	200011609	ESJQ3001	1	=ES+S/35.8	power circuit breaker	0,11 - 0,16 A	3RV1021-0AA15	Siemens
QL1.30	200011609	ESJQ3001	1	=ES+S/36.8	power circuit breaker	0,11 - 0,16 A	3RV1021-0AA15	Siemens
QL1.31	200011609	ESJQ3001	1	=ES+S/38.8	power circuit breaker	0,11 - 0,16 A	3RV1021-0AA15	Siemens
QL1.32	200011609	ESJQ3001	1	=ES+S/39.8	power circuit breaker	0,11 - 0,16 A	3RV1021-0AA15	Siemens
QL1.33	200011609	ESJQ3001	1	=ES+S/40.8	power circuit breaker	0,11 - 0,16 A	3RV1021-0AA15	Siemens
QL1.34	200011609	ESJQ3001	1	=ES+S/41.8	power circuit breaker	0,11 - 0,16 A	3RV1021-0AA15	Siemens
QL1.35	200011609	ESJQ3001	1	=ES+S/42.8	power circuit breaker	0,11 - 0,16 A	3RV1021-0AA15	Siemens
QL1.36	200011609	ESJQ3001	1	=ES+S/43.8	power circuit breaker	0,11 - 0,16 A	3RV1021-0AA15	Siemens
QL1.37	200011609	ESJQ3001	1	=ES+S/45.8	power circuit breaker	0,11 - 0,16 A	3RV1021-0AA15	Siemens
QL1.38	200011609	ESJQ3001	1	=ES+S/46.8	power circuit breaker	0,11 - 0,16 A	3RV1021-0AA15	Siemens
QL1.39	200011609	ESJQ3001	1	=ES+S/47.8	power circuit breaker	0,11 - 0,16 A	3RV1021-0AA15	Siemens
QL1.40	200011609	ESJQ3001	1	=ES+S/48.8	power circuit breaker	0,11 - 0,16 A	3RV1021-0AA15	Siemens
QL1.41	200011609	ESJQ3001	1	=ES+S/49.8	power circuit breaker	0,11 - 0,16 A	3RV1021-0AA15	Siemens
QL1.42	200011609	ESJQ3001	1	=ES+S/50.8	power circuit breaker	0,11 - 0,16 A	3RV1021-0AA15	Siemens
QL1.43	200011609	ESJQ3001	1	=ES+S/52.8	power circuit breaker	0,11 - 0,16 A	3RV1021-0AA15	Siemens
QL1.44	200011609	ESJQ3001	1	=ES+S/53.8	power circuit breaker	0,11 - 0,16 A	3RV1021-0AA15	Siemens
QL1.45	200011609	ESJQ3001	1	=ES+S/54.8	power circuit breaker	0,11 - 0,16 A	3RV1021-0AA15	Siemens
QL1.46	200011609	ESJQ3001	1	=ES+S/55.8	power circuit breaker	0,11 - 0,16 A	3RV1021-0AA15	Siemens
QL1.47	200011609	ESJQ3001	1	=ES+S/56.8	power circuit breaker	0,11 - 0,16 A	3RV1021-0AA15	Siemens
QL1.48	200011609	ESJQ3001	1	=ES+S/57.8	power circuit breaker	0,11 - 0,16 A	3RV1021-0AA15	Siemens
QL1.49	200011609	ESJQ3001	1	=ES+S/59.8	power circuit breaker	0,11 - 0,16 A	3RV1021-0AA15	Siemens
QL1.50	200011609	ESJQ3001	1	=ES+S/60.8	power circuit breaker	0,11 - 0,16 A	3RV1021-0AA15	Siemens
QL1.51	200011609	ESJQ3001	1	=ES+S/61.8	power circuit breaker	0,11 - 0,16 A	3RV1021-0AA15	Siemens
QL1.52	200011609	ESJQ3001	1	=ES+S/62.8	power circuit breaker	0,11 - 0,16 A	3RV1021-0AA15	Siemens
QL1.53	200011609	ESJQ3001	1	=ES+S/63.8	power circuit breaker	0,11 - 0,16 A	3RV1021-0AA15	Siemens
QL1.54	200011609	ESJQ3001	1	=ES+S/64.8	power circuit breaker	0,11 - 0,16 A	3RV1021-0AA15	Siemens
QL1.55	200011609	ESJQ3001	1	=ES+S/68.8	power circuit breaker	0,11 - 0,16 A	3RV1021-0AA15	Siemens
QL1.56	200011609	ESJQ3001	1	=ES+S/69.8	power circuit breaker	0,11 - 0,16 A	3RV1021-0AA15	Siemens
QL1.57	200011609	ESJQ3001	1	=ES+S/70.8	power circuit breaker	0,11 - 0,16 A	3RV1021-0AA15	Siemens
QL1.58	200011609	ESJQ3001	1	=ES+S/71.8	power circuit breaker	0,11 - 0,16 A	3RV1021-0AA15	Siemens
QL1.59	200011609	ESJQ3001	1	=ES+S/72.8	power circuit breaker	0,11 - 0,16 A	3RV1021-0AA15	Siemens
QL1.60	200011609	ESJQ3001	1	=ES+S/73.8	power circuit breaker	0,11 - 0,16 A	3RV1021-0AA15	Siemens
QL1.61	200011609	ESJQ3001	1	=ES+S/75.8	power circuit breaker	0,11 - 0,16 A	3RV1021-0AA15	Siemens
QL1.62	200011609	ESJQ3001	1	=ES+S/76.8	power circuit breaker	0,11 - 0,16 A	3RV1021-0AA15	Siemens
QL1.63	200011609	ESJQ3001	1	=ES+S/77.8	power circuit breaker	0,11 - 0,16 A	3RV1021-0AA15	Siemens

Parts list

electrical construction

Artilelstückliste_Elo_SAP_001

DT	Part number new	Part number old	Quantity	Placement	Designation 1	Designation 2	Order number	Manufacturer
QL1.64	200011609	ESJQ3001	1	=ES+S/78.8	power circuit breaker	0,11 - 0,16 A	3RV1021-0AA15	Siemens
QL1.65	200011609	ESJQ3001	1	=ES+S/79.8	power circuit breaker	0,11 - 0,16 A	3RV1021-0AA15	Siemens
QL1.66	200011609	ESJQ3001	1	=ES+S/80.8	power circuit breaker	0,11 - 0,16 A	3RV1021-0AA15	Siemens
QL1.67	200011609	ESJQ3001	1	=ES+S/82.8	power circuit breaker	0,11 - 0,16 A	3RV1021-0AA15	Siemens
QL1.68	200011609	ESJQ3001	1	=ES+S/83.8	power circuit breaker	0,11 - 0,16 A	3RV1021-0AA15	Siemens
QL1.69	200011609	ESJQ3001	1	=ES+S/84.8	power circuit breaker	0,11 - 0,16 A	3RV1021-0AA15	Siemens
QL1.70	200011609	ESJQ3001	1	=ES+S/85.8	power circuit breaker	0,11 - 0,16 A	3RV1021-0AA15	Siemens
QL1.71	200011609	ESJQ3001	1	=ES+S/86.8	power circuit breaker	0,11 - 0,16 A	3RV1021-0AA15	Siemens
QL1.72	200011609	ESJQ3001	1	=ES+S/87.8	power circuit breaker	0,11 - 0,16 A	3RV1021-0AA15	Siemens
QL1.73	200011609	ESJQ3001	1	=ES+S/89.8	power circuit breaker	0,11 - 0,16 A	3RV1021-0AA15	Siemens
QL1.74	200011609	ESJQ3001	1	=ES+S/90.8	power circuit breaker	0,11 - 0,16 A	3RV1021-0AA15	Siemens
QL1.75	200011609	ESJQ3001	1	=ES+S/91.8	power circuit breaker	0,11 - 0,16 A	3RV1021-0AA15	Siemens
QL1.76	200011609	ESJQ3001	1	=ES+S/92.8	power circuit breaker	0,11 - 0,16 A	3RV1021-0AA15	Siemens
QL1.77	200011609	ESJQ3001	1	=ES+S/93.8	power circuit breaker	0,11 - 0,16 A	3RV1021-0AA15	Siemens
QL1.78	200011609	ESJQ3001	1	=ES+S/94.8	power circuit breaker	0,11 - 0,16 A	3RV1021-0AA15	Siemens
QL1.79	200011609	ESJQ3001	1	=ES+S/96.8	power circuit breaker	0,11 - 0,16 A	3RV1021-0AA15	Siemens
QL1.80	200011609	ESJQ3001	1	=ES+S/97.8	power circuit breaker	0,11 - 0,16 A	3RV1021-0AA15	Siemens
QL1.81	200011609	ESJQ3001	1	=ES+S/98.8	power circuit breaker	0,11 - 0,16 A	3RV1021-0AA15	Siemens
QL1.82	200011609	ESJQ3001	1	=ES+S/99.8	power circuit breaker	0,11 - 0,16 A	3RV1021-0AA15	Siemens
QL1.83	200011609	ESJQ3001	1	=ES+S/100.8	power circuit breaker	0,11 - 0,16 A	3RV1021-0AA15	Siemens
QL1.84	200011609	ESJQ3001	1	=ES+S/101.8	power circuit breaker	0,11 - 0,16 A	3RV1021-0AA15	Siemens
QL1.85	200011609	ESJQ3001	1	=ES+S/103.8	power circuit breaker	0,11 - 0,16 A	3RV1021-0AA15	Siemens
QL1.86	200011609	ESJQ3001	1	=ES+S/104.8	power circuit breaker	0,11 - 0,16 A	3RV1021-0AA15	Siemens
QL1.87	200011609	ESJQ3001	1	=ES+S/105.8	power circuit breaker	0,11 - 0,16 A	3RV1021-0AA15	Siemens
QL1.88	200011609	ESJQ3001	1	=ES+S/106.8	power circuit breaker	0,11 - 0,16 A	3RV1021-0AA15	Siemens
QL1.89	200011609	ESJQ3001	1	=ES+S/107.8	power circuit breaker	0,11 - 0,16 A	3RV1021-0AA15	Siemens
QL1.90	200011609	ESJQ3001	1	=ES+S/108.8	power circuit breaker	0,11 - 0,16 A	3RV1021-0AA15	Siemens
QL1.91	200011609	ESJQ3001	1	=ES+S/110.8	power circuit breaker	0,11 - 0,16 A	3RV1021-0AA15	Siemens
QL1.92	200011609	ESJQ3001	1	=ES+S/111.8	power circuit breaker	0,11 - 0,16 A	3RV1021-0AA15	Siemens
QL1.93	200011609	ESJQ3001	1	=ES+S/112.8	power circuit breaker	0,11 - 0,16 A	3RV1021-0AA15	Siemens
QL1.95	200011609	ESJQ3001	1	=ES+S/113.8	power circuit breaker	0,11 - 0,16 A	3RV1021-0AA15	Siemens
QL1.97	200011609	ESJQ3001	1	=ES+S/114.8	power circuit breaker	0,11 - 0,16 A	3RV1021-0AA15	Siemens
QL1.99	200011609	ESJQ3001	1	=ES+S/115.8	power circuit breaker	0,11 - 0,16 A	3RV1021-0AA15	Siemens
QL1.101	200011609	ESJQ3001	1	=ES+S/117.8	power circuit breaker	0,11 - 0,16 A	3RV1021-0AA15	Siemens
QL1.102	200011609	ESJQ3001	1	=ES+S/118.8	power circuit breaker	0,11 - 0,16 A	3RV1021-0AA15	Siemens
QL2.1	200011609	ESJQ3001	1	=ES+S/119.8	power circuit breaker	0,11 - 0,16 A	3RV1021-0AA15	Siemens
QL2.2	200011609	ESJQ3001	1	=ES+S/120.8	power circuit breaker	0,11 - 0,16 A	3RV1021-0AA15	Siemens
QL2.3	200011609	ESJQ3001	1	=ES+S/121.8	power circuit breaker	0,11 - 0,16 A	3RV1021-0AA15	Siemens

Parts list

electrical construction

Artilelstückliste_Elo_SAP_001

DT	Part number new	Part number old	Quantity	Placement	Designation 1	Designation 2	Order number	Manufacturer
QL2.4	200011609	ESJQ3001	1	=ES+S/122.8	power circuit breaker	0,11 - 0,16 A	3RV1021-0AA15	Siemens
QL2.5	200011609	ESJQ3001	1	=ES+S/123.8	power circuit breaker	0,11 - 0,16 A	3RV1021-0AA15	Siemens
QL2.6	200011609	ESJQ3001	1	=ES+S/125.8	power circuit breaker	0,11 - 0,16 A	3RV1021-0AA15	Siemens
QL2.7	200011609	ESJQ3001	1	=ES+S/126.8	power circuit breaker	0,11 - 0,16 A	3RV1021-0AA15	Siemens
QL2.8	200011609	ESJQ3001	1	=ES+S/127.8	power circuit breaker	0,11 - 0,16 A	3RV1021-0AA15	Siemens
QL2.9	200011609	ESJQ3001	1	=ES+S/128.8	power circuit breaker	0,11 - 0,16 A	3RV1021-0AA15	Siemens
QL2.10	200011609	ESJQ3001	1	=ES+S/129.8	power circuit breaker	0,11 - 0,16 A	3RV1021-0AA15	Siemens
QL2.11	200011609	ESJQ3001	1	=ES+S/133.8	power circuit breaker	0,11 - 0,16 A	3RV1021-0AA15	Siemens
QL2.12	200011609	ESJQ3001	1	=ES+S/134.8	power circuit breaker	0,11 - 0,16 A	3RV1021-0AA15	Siemens
QL2.13	200011609	ESJQ3001	1	=ES+S/135.8	power circuit breaker	0,11 - 0,16 A	3RV1021-0AA15	Siemens
QL2.14	200011609	ESJQ3001	1	=ES+S/136.8	power circuit breaker	0,11 - 0,16 A	3RV1021-0AA15	Siemens
QL2.15	200011609	ESJQ3001	1	=ES+S/137.8	power circuit breaker	0,11 - 0,16 A	3RV1021-0AA15	Siemens
QL2.16	200011609	ESJQ3001	1	=ES+S/138.8	power circuit breaker	0,11 - 0,16 A	3RV1021-0AA15	Siemens
QL2.17	200011609	ESJQ3001	1	=ES+S/140.8	power circuit breaker	0,11 - 0,16 A	3RV1021-0AA15	Siemens
QL2.18	200011609	ESJQ3001	1	=ES+S/141.8	power circuit breaker	0,11 - 0,16 A	3RV1021-0AA15	Siemens
QL2.19	200011609	ESJQ3001	1	=ES+S/142.8	power circuit breaker	0,11 - 0,16 A	3RV1021-0AA15	Siemens
QL2.20	200011609	ESJQ3001	1	=ES+S/143.8	power circuit breaker	0,11 - 0,16 A	3RV1021-0AA15	Siemens
QL2.21	200011609	ESJQ3001	1	=ES+S/144.8	power circuit breaker	0,11 - 0,16 A	3RV1021-0AA15	Siemens
QL2.22	200011609	ESJQ3001	1	=ES+S/145.8	power circuit breaker	0,11 - 0,16 A	3RV1021-0AA15	Siemens
QL2.23	200011609	ESJQ3001	1	=ES+S/147.8	power circuit breaker	0,11 - 0,16 A	3RV1021-0AA15	Siemens
QL2.24	200011609	ESJQ3001	1	=ES+S/148.8	power circuit breaker	0,11 - 0,16 A	3RV1021-0AA15	Siemens
QL2.25	200011609	ESJQ3001	1	=ES+S/149.8	power circuit breaker	0,11 - 0,16 A	3RV1021-0AA15	Siemens
QL2.26	200011609	ESJQ3001	1	=ES+S/150.8	power circuit breaker	0,11 - 0,16 A	3RV1021-0AA15	Siemens
QL2.27	200011609	ESJQ3001	1	=ES+S/151.8	power circuit breaker	0,11 - 0,16 A	3RV1021-0AA15	Siemens
QL2.28	200011609	ESJQ3001	1	=ES+S/152.8	power circuit breaker	0,11 - 0,16 A	3RV1021-0AA15	Siemens
QL2.29	200011609	ESJQ3001	1	=ES+S/154.8	power circuit breaker	0,11 - 0,16 A	3RV1021-0AA15	Siemens
QL2.30	200011609	ESJQ3001	1	=ES+S/155.8	power circuit breaker	0,11 - 0,16 A	3RV1021-0AA15	Siemens
QL2.31	200011609	ESJQ3001	1	=ES+S/156.8	power circuit breaker	0,11 - 0,16 A	3RV1021-0AA15	Siemens
QL2.32	200011609	ESJQ3001	1	=ES+S/157.8	power circuit breaker	0,11 - 0,16 A	3RV1021-0AA15	Siemens
QL2.33	200011609	ESJQ3001	1	=ES+S/158.8	power circuit breaker	0,11 - 0,16 A	3RV1021-0AA15	Siemens
QL2.34	200011609	ESJQ3001	1	=ES+S/159.8	power circuit breaker	0,11 - 0,16 A	3RV1021-0AA15	Siemens
QL2.35	200011609	ESJQ3001	1	=ES+S/161.8	power circuit breaker	0,11 - 0,16 A	3RV1021-0AA15	Siemens
QL2.36	200011609	ESJQ3001	1	=ES+S/162.8	power circuit breaker	0,11 - 0,16 A	3RV1021-0AA15	Siemens
QL2.37	200011609	ESJQ3001	1	=ES+S/163.8	power circuit breaker	0,11 - 0,16 A	3RV1021-0AA15	Siemens
QL2.38	200011609	ESJQ3001	1	=ES+S/164.8	power circuit breaker	0,11 - 0,16 A	3RV1021-0AA15	Siemens
QL2.39	200011609	ESJQ3001	1	=ES+S/165.8	power circuit breaker	0,11 - 0,16 A	3RV1021-0AA15	Siemens
QL2.40	200011609	ESJQ3001	1	=ES+S/166.8	power circuit breaker	0,11 - 0,16 A	3RV1021-0AA15	Siemens
QL2.41	200011609	ESJQ3001	1	=ES+S/168.8	power circuit breaker	0,11 - 0,16 A	3RV1021-0AA15	Siemens

Parts list

electrical construction

Artilelstückliste_Elo_SAP_001

DT	Part number new	Part number old	Quantity	Placement	Designation 1	Designation 2	Order number	Manufacturer
QL2.42	200011609	ESJQ3001	1	=ES+S/169.8	power circuit breaker	0,11 - 0,16 A	3RV1021-0AA15	Siemens
QL2.43	200011609	ESJQ3001	1	=ES+S/170.8	power circuit breaker	0,11 - 0,16 A	3RV1021-0AA15	Siemens
QL2.44	200011609	ESJQ3001	1	=ES+S/171.8	power circuit breaker	0,11 - 0,16 A	3RV1021-0AA15	Siemens
QL2.45	200011609	ESJQ3001	1	=ES+S/172.8	power circuit breaker	0,11 - 0,16 A	3RV1021-0AA15	Siemens
QL2.46	200011609	ESJQ3001	1	=ES+S/173.8	power circuit breaker	0,11 - 0,16 A	3RV1021-0AA15	Siemens
QL2.47	200011609	ESJQ3001	1	=ES+S/175.8	power circuit breaker	0,11 - 0,16 A	3RV1021-0AA15	Siemens
QL2.48	200011609	ESJQ3001	1	=ES+S/176.8	power circuit breaker	0,11 - 0,16 A	3RV1021-0AA15	Siemens
QL2.49	200011609	ESJQ3001	1	=ES+S/177.8	power circuit breaker	0,11 - 0,16 A	3RV1021-0AA15	Siemens
QL2.50	200011609	ESJQ3001	1	=ES+S/178.8	power circuit breaker	0,11 - 0,16 A	3RV1021-0AA15	Siemens
QL2.51	200011609	ESJQ3001	1	=ES+S/179.8	power circuit breaker	0,11 - 0,16 A	3RV1021-0AA15	Siemens
QL2.52	200011609	ESJQ3001	1	=ES+S/180.8	power circuit breaker	0,11 - 0,16 A	3RV1021-0AA15	Siemens
QL2.53	200011609	ESJQ3001	1	=ES+S/182.8	power circuit breaker	0,11 - 0,16 A	3RV1021-0AA15	Siemens
QL2.54	200011609	ESJQ3001	1	=ES+S/183.8	power circuit breaker	0,11 - 0,16 A	3RV1021-0AA15	Siemens
QL2.55	200011609	ESJQ3001	1	=ES+S/184.8	power circuit breaker	0,11 - 0,16 A	3RV1021-0AA15	Siemens
QL2.56	200011609	ESJQ3001	1	=ES+S/185.8	power circuit breaker	0,11 - 0,16 A	3RV1021-0AA15	Siemens
QL2.57	200011609	ESJQ3001	1	=ES+S/186.8	power circuit breaker	0,11 - 0,16 A	3RV1021-0AA15	Siemens
QL2.58	200011609	ESJQ3001	1	=ES+S/187.8	power circuit breaker	0,11 - 0,16 A	3RV1021-0AA15	Siemens
QL2.59	200011609	ESJQ3001	1	=ES+S/189.8	power circuit breaker	0,11 - 0,16 A	3RV1021-0AA15	Siemens
QL2.60	200011609	ESJQ3001	1	=ES+S/190.8	power circuit breaker	0,11 - 0,16 A	3RV1021-0AA15	Siemens
QL2.61	200011609	ESJQ3001	1	=ES+S/191.8	power circuit breaker	0,11 - 0,16 A	3RV1021-0AA15	Siemens
QL2.62	200011609	ESJQ3001	1	=ES+S/192.8	power circuit breaker	0,11 - 0,16 A	3RV1021-0AA15	Siemens
QL2.63	200011609	ESJQ3001	1	=ES+S/193.8	power circuit breaker	0,11 - 0,16 A	3RV1021-0AA15	Siemens
QLS1	200011611	ESJQ3003	1	=ES+S/2.8	power circuit breaker	0,22 - 0,32 A	3RV1021-0DA15	Siemens
QLS11	200011611	ESJQ3003	1	=ES+S/132.8	power circuit breaker	0,22 - 0,32 A	3RV1021-0DA15	Siemens
QLS19	200011611	ESJQ3003	1	=ES+S/23.8	power circuit breaker	0,22 - 0,32 A	3RV1021-0DA15	Siemens
QLS29	200011611	ESJQ3003	1	=ES+S/153.8	power circuit breaker	0,22 - 0,32 A	3RV1021-0DA15	Siemens
QLS37	200011611	ESJQ3003	1	=ES+S/44.8	power circuit breaker	0,22 - 0,32 A	3RV1021-0DA15	Siemens
QLS47	200011611	ESJQ3003	1	=ES+S/174.8	power circuit breaker	0,22 - 0,32 A	3RV1021-0DA15	Siemens
QLS55	200011611	ESJQ3003	1	=ES+S/67.8	power circuit breaker	0,22 - 0,32 A	3RV1021-0DA15	Siemens
QLS73	200011611	ESJQ3003	1	=ES+S/88.8	power circuit breaker	0,22 - 0,32 A	3RV1021-0DA15	Siemens
QLS91	200011611	ESJQ3003	1	=ES+S/109.4	power circuit breaker	0,22 - 0,32 A	3RV1021-0DA15	Siemens
QM3.5	200011562	ESJK9315	1	=ES+S/274.4	power contactor	15kW / 24 VDC	3RT1034-1BB40	Siemens
QM3.5	200011503	ESJK0131	1	=ES+S/274.4	auxiliary block	LS (S0-S12) / 3S+1Ö	3RH1921-1HA31	Siemens
QM3.5	200011693	ESJZ9101	1	=ES+S/274.4	RC network	S0 / 24V AC/DC	3RT19 26-1CB00	Siemens
QM7	200011566	ESJK9337	1	=ES+S/273.1	power contactor	37kW / 24 VDC	3RT1045-1BB40	Siemens
QM7	200011503	ESJK0131	1	=ES+S/273.1	auxiliary block	LS (S0-S12) / 3S+1Ö	3RH1921-1HA31	Siemens
QM7	200011694	ESJZ9103	1	=ES+S/273.1	RC network	S2,3 / 24V AC/DC	3RT19 36-1CB00	Siemens
QM7	200011492	ESJK0003	2	=ES+S/273.1	Terminals Cover	für Schütz S3	3RT1946-4EA2	Siemens

Parts list

electrical construction

Artilelstückliste_Elo_SAP_001

DT	Part number new	old	Quantity	Placement	Designation 1	Designation 2	Order number	Manufacturer
QM9	200011566	ESJK9337	1	=ES+S/273.3	power contactor	37kW / 24 VDC	3RT1045-1BB40	Siemens
QM9	200011694	ESJZ9103	1	=ES+S/273.3	RC network	S2,3 / 24V AC/DC	3RT19 36-1CB00	Siemens
QM9	200011492	ESJK0003	2	=ES+S/273.3	Terminals Cover	für Schütz S3	3RT1946-4EA2	Siemens
QM10	200011566	ESJK9337	1	=ES+S/273.3	power contactor	37kW / 24 VDC	3RT1045-1BB40	Siemens
QM10	200011694	ESJZ9103	1	=ES+S/273.3	RC network	S2,3 / 24V AC/DC	3RT19 36-1CB00	Siemens
QM10	200011492	ESJK0003	2	=ES+S/273.3	Terminals Cover	für Schütz S3	3RT1946-4EA2	Siemens
QM11	200011566	ESJK9337	1	=ES+S/273.4	power contactor	37kW / 24 VDC	3RT1045-1BB40	Siemens
QM11	200011694	ESJZ9103	1	=ES+S/273.4	RC network	S2,3 / 24V AC/DC	3RT19 36-1CB00	Siemens
QM11	200011492	ESJK0003	2	=ES+S/273.4	Terminals Cover	für Schütz S3	3RT1946-4EA2	Siemens
QM12	200011566	ESJK9337	1	=ES+S/273.5	power contactor	37kW / 24 VDC	3RT1045-1BB40	Siemens
QM12	200011694	ESJZ9103	1	=ES+S/273.5	RC network	S2,3 / 24V AC/DC	3RT19 36-1CB00	Siemens
QM12	200011492	ESJK0003	2	=ES+S/273.5	Terminals Cover	für Schütz S3	3RT1946-4EA2	Siemens
QM13	200011566	ESJK9337	1	=ES+S/273.6	power contactor	37kW / 24 VDC	3RT1045-1BB40	Siemens
QM13	200011694	ESJZ9103	1	=ES+S/273.6	RC network	S2,3 / 24V AC/DC	3RT19 36-1CB00	Siemens
QM13	200011492	ESJK0003	2	=ES+S/273.6	Terminals Cover	für Schütz S3	3RT1946-4EA2	Siemens
QM14	200011566	ESJK9337	1	=ES+S/273.6	power contactor	37kW / 24 VDC	3RT1045-1BB40	Siemens
QM14	200011694	ESJZ9103	1	=ES+S/273.6	RC network	S2,3 / 24V AC/DC	3RT19 36-1CB00	Siemens
QM14	200011492	ESJK0003	2	=ES+S/273.6	Terminals Cover	für Schütz S3	3RT1946-4EA2	Siemens
QM15	200011566	ESJK9337	1	=ES+S/273.7	power contactor	37kW / 24 VDC	3RT1045-1BB40	Siemens
QM15	200011694	ESJZ9103	1	=ES+S/273.7	RC network	S2,3 / 24V AC/DC	3RT19 36-1CB00	Siemens
QM15	200011492	ESJK0003	2	=ES+S/273.7	Terminals Cover	für Schütz S3	3RT1946-4EA2	Siemens
QM16	200011566	ESJK9337	1	=ES+S/273.8	power contactor	37kW / 24 VDC	3RT1045-1BB40	Siemens
QM16	200011694	ESJZ9103	1	=ES+S/273.8	RC network	S2,3 / 24V AC/DC	3RT19 36-1CB00	Siemens
QM16	200011492	ESJK0003	2	=ES+S/273.8	Terminals Cover	für Schütz S3	3RT1946-4EA2	Siemens
QS3.5	200010240	ESIA3815	1	=ES+S/274.5	soft starter		3 RW 3027-1BB04	Siemens
QS7	200010242	ESIA3837	1	=ES+S/273.2	soft starter		3 RW 3038-1BB04	Siemens
QS7	200011491	ESJK0002	2	=ES+S/273.2	Terminals Cover	für Schütz S2	3RT1936-4EA2	Siemens
QS8.3	200010239	ESIA3811	1	=ES+S/274.6	soft starter		3 RW 3026-1BB04	Siemens
QT230	200011629	ESJQ3200	1	=ES+S/210.1	power circuit breaker	14 - 20 A	3RV1021-4BA15	Siemens
QT230	200013269	EWOF1200	1	=ES+S/210.1	Busbar connection point	25A / 60mm System 45mm breit (2)	32431	Wöhner
QT230.2	200011629	ESJQ3200	1	=ES+S/214.1	power circuit breaker	14 - 20 A	3RV1021-4BA15	Siemens
QT230.2	200013269	EWOF1200	1	=ES+S/214.1	Busbar connection point	25A / 60mm System 45mm breit (2)	32431	Wöhner
QTSA2	200011621	ESJQ3032	1	=ES+S/209.3	power circuit breaker	2,2 - 3,2 A	3RV1021-1DA15	Siemens
QTSA3	200011621	ESJQ3032	1	=ES+S/209.4	power circuit breaker	2,2 - 3,2 A	3RV1021-1DA15	Siemens
QTSA4	200011621	ESJQ3032	1	=ES+S/209.6	power circuit breaker	2,2 - 3,2 A	3RV1021-1DA15	Siemens
QTST1	200011621	ESJQ3032	1	=ES+S/215.1	power circuit breaker	2,2 - 3,2 A	3RV1021-1DA15	Siemens
QTST1	200013269	EWOF1200	1	=ES+S/215.1	Busbar connection point	25A / 60mm System 45mm breit (2)	32431	Wöhner
QTST2	200011621	ESJQ3032	1	=ES+S/217.1	power circuit breaker	2,2 - 3,2 A	3RV1021-1DA15	Siemens

Parts list

electrical construction

Artilelstückliste_Elo_SAP_001

DT	Part number new	Part number old	Quantity	Placement	Designation 1	Designation 2	Order number	Manufacturer
QTST2	200013269	EWOF1200	1	=ES+S/217.1	Busbar connection point	25A / 60mm System 45mm breit (2)	32431	Wöhner
QZ1.1	200011658	ESJQ3450	1	=ES+S/2.1	power circuit breaker	36 - 45 A	3RV1031-4GA10	Siemens
QZ1.1	200011644	ESJQ3312	1	=ES+S/2.1	auxiliary contact	querliegend	3RV1901-1E	Siemens
QZ1.1	200011647	ESJQ3315	1	=ES+S/2.1	Connector	Schütz S2 - DC - Leistungsschalter S2	3RA1931-1B	Siemens
QZ1.1	200013270	EWOF1201	1	=ES+S/2.1	Busbar connection point	63A / 60mm System 54mm breit f. Siemens S2	32455	Wöhner
QZ1.1	200011491	ESJK0002	2	=ES+S/2.1	Terminals Cover	für Schütz S2	3RT1936-4EA2	Siemens
QZ1.7	200011658	ESJQ3450	1	=ES+S/9.1	power circuit breaker	36 - 45 A	3RV1031-4GA10	Siemens
QZ1.7	200011644	ESJQ3312	1	=ES+S/9.1	auxiliary contact	querliegend	3RV1901-1E	Siemens
QZ1.7	200011647	ESJQ3315	1	=ES+S/9.1	Connector	Schütz S2 - DC - Leistungsschalter S2	3RA1931-1B	Siemens
QZ1.7	200013270	EWOF1201	1	=ES+S/9.1	Busbar connection point	63A / 60mm System 54mm breit f. Siemens S2	32455	Wöhner
QZ1.7	200011491	ESJK0002	2	=ES+S/9.1	Terminals Cover	für Schütz S2	3RT1936-4EA2	Siemens
QZ1.13	200011658	ESJQ3450	1	=ES+S/16.1	power circuit breaker	36 - 45 A	3RV1031-4GA10	Siemens
QZ1.13	200011644	ESJQ3312	1	=ES+S/16.1	auxiliary contact	querliegend	3RV1901-1E	Siemens
QZ1.13	200011647	ESJQ3315	1	=ES+S/16.1	Connector	Schütz S2 - DC - Leistungsschalter S2	3RA1931-1B	Siemens
QZ1.13	200013270	EWOF1201	1	=ES+S/16.1	Busbar connection point	63A / 60mm System 54mm breit f. Siemens S2	32455	Wöhner
QZ1.13	200011491	ESJK0002	2	=ES+S/16.1	Terminals Cover	für Schütz S2	3RT1936-4EA2	Siemens
QZ1.19	200011658	ESJQ3450	1	=ES+S/23.1	power circuit breaker	36 - 45 A	3RV1031-4GA10	Siemens
QZ1.19	200011644	ESJQ3312	1	=ES+S/23.1	auxiliary contact	querliegend	3RV1901-1E	Siemens
QZ1.19	200011647	ESJQ3315	1	=ES+S/23.1	Connector	Schütz S2 - DC - Leistungsschalter S2	3RA1931-1B	Siemens
QZ1.19	200013270	EWOF1201	1	=ES+S/23.1	Busbar connection point	63A / 60mm System 54mm breit f. Siemens S2	32455	Wöhner
QZ1.19	200011491	ESJK0002	2	=ES+S/23.1	Terminals Cover	für Schütz S2	3RT1936-4EA2	Siemens
QZ1.25	200011658	ESJQ3450	1	=ES+S/30.1	power circuit breaker	36 - 45 A	3RV1031-4GA10	Siemens
QZ1.25	200011644	ESJQ3312	1	=ES+S/30.1	auxiliary contact	querliegend	3RV1901-1E	Siemens
QZ1.25	200011647	ESJQ3315	1	=ES+S/30.1	Connector	Schütz S2 - DC - Leistungsschalter S2	3RA1931-1B	Siemens
QZ1.25	200013270	EWOF1201	1	=ES+S/30.1	Busbar connection point	63A / 60mm System 54mm breit f. Siemens S2	32455	Wöhner
QZ1.25	200011491	ESJK0002	2	=ES+S/30.1	Terminals Cover	für Schütz S2	3RT1936-4EA2	Siemens
QZ1.31	200011658	ESJQ3450	1	=ES+S/37.1	power circuit breaker	36 - 45 A	3RV1031-4GA10	Siemens
QZ1.31	200011644	ESJQ3312	1	=ES+S/37.1	auxiliary contact	querliegend	3RV1901-1E	Siemens
QZ1.31	200011647	ESJQ3315	1	=ES+S/37.1	Connector	Schütz S2 - DC - Leistungsschalter S2	3RA1931-1B	Siemens
QZ1.31	200013270	EWOF1201	1	=ES+S/37.1	Busbar connection point	63A / 60mm System 54mm breit f. Siemens S2	32455	Wöhner
QZ1.31	200011491	ESJK0002	2	=ES+S/37.1	Terminals Cover	für Schütz S2	3RT1936-4EA2	Siemens
QZ1.37	200011658	ESJQ3450	1	=ES+S/44.1	power circuit breaker	36 - 45 A	3RV1031-4GA10	Siemens
QZ1.37	200011644	ESJQ3312	1	=ES+S/44.1	auxiliary contact	querliegend	3RV1901-1E	Siemens
QZ1.37	200011647	ESJQ3315	1	=ES+S/44.1	Connector	Schütz S2 - DC - Leistungsschalter S2	3RA1931-1B	Siemens
QZ1.37	200013270	EWOF1201	1	=ES+S/44.1	Busbar connection point	63A / 60mm System 54mm breit f. Siemens S2	32455	Wöhner
QZ1.37	200011491	ESJK0002	2	=ES+S/44.1	Terminals Cover	für Schütz S2	3RT1936-4EA2	Siemens
QZ1.43	200011658	ESJQ3450	1	=ES+S/51.1	power circuit breaker	36 - 45 A	3RV1031-4GA10	Siemens
QZ1.43	200011644	ESJQ3312	1	=ES+S/51.1	auxiliary contact	querliegend	3RV1901-1E	Siemens

Parts list

electrical construction

Artilelstückliste_Elo_SAP_001

DT	Part number new	Part number old	Quantity	Placement	Designation 1	Designation 2	Order number	Manufacturer
QZ1.43	200011647	ESJQ3315	1	=ES+S/51.1	Connector	Schütz S2 - DC - Leistungsschalter S2	3RA1931-1B	Siemens
QZ1.43	200013270	EWOF1201	1	=ES+S/51.1	Busbar connection point	63A / 60mm System 54mm breit f. Siemens S2	455	Wöhner
QZ1.43	200011491	ESJK0002	2	=ES+S/51.1	Terminals Cover	für Schütz S2	3RT1936-4EA2	Siemens
QZ1.49	200011658	ESJQ3450	1	=ES+S/58.1	power circuit breaker	36 - 45 A	3RV1031-4GA10	Siemens
QZ1.49	200011644	ESJQ3312	1	=ES+S/58.1	auxiliary contact	querliegend	3RV1901-1E	Siemens
QZ1.49	200011647	ESJQ3315	1	=ES+S/58.1	Connector	Schütz S2 - DC - Leistungsschalter S2	3RA1931-1B	Siemens
QZ1.49	200013270	EWOF1201	1	=ES+S/58.1	Busbar connection point	63A / 60mm System 54mm breit f. Siemens S2	455	Wöhner
QZ1.49	200011491	ESJK0002	2	=ES+S/58.1	Terminals Cover	für Schütz S2	3RT1936-4EA2	Siemens
QZ1.55	200011658	ESJQ3450	1	=ES+S/67.1	power circuit breaker	36 - 45 A	3RV1031-4GA10	Siemens
QZ1.55	200011644	ESJQ3312	1	=ES+S/67.1	auxiliary contact	querliegend	3RV1901-1E	Siemens
QZ1.55	200011647	ESJQ3315	1	=ES+S/67.1	Connector	Schütz S2 - DC - Leistungsschalter S2	3RA1931-1B	Siemens
QZ1.55	200013270	EWOF1201	1	=ES+S/67.1	Busbar connection point	63A / 60mm System 54mm breit f. Siemens S2	455	Wöhner
QZ1.55	200011491	ESJK0002	2	=ES+S/67.1	Terminals Cover	für Schütz S2	3RT1936-4EA2	Siemens
QZ1.61	200011658	ESJQ3450	1	=ES+S/74.1	power circuit breaker	36 - 45 A	3RV1031-4GA10	Siemens
QZ1.61	200011644	ESJQ3312	1	=ES+S/74.1	auxiliary contact	querliegend	3RV1901-1E	Siemens
QZ1.61	200011647	ESJQ3315	1	=ES+S/74.1	Connector	Schütz S2 - DC - Leistungsschalter S2	3RA1931-1B	Siemens
QZ1.61	200013270	EWOF1201	1	=ES+S/74.1	Busbar connection point	63A / 60mm System 54mm breit f. Siemens S2	455	Wöhner
QZ1.61	200011491	ESJK0002	2	=ES+S/74.1	Terminals Cover	für Schütz S2	3RT1936-4EA2	Siemens
QZ1.67	200011658	ESJQ3450	1	=ES+S/81.1	power circuit breaker	36 - 45 A	3RV1031-4GA10	Siemens
QZ1.67	200011644	ESJQ3312	1	=ES+S/81.1	auxiliary contact	querliegend	3RV1901-1E	Siemens
QZ1.67	200011647	ESJQ3315	1	=ES+S/81.1	Connector	Schütz S2 - DC - Leistungsschalter S2	3RA1931-1B	Siemens
QZ1.67	200013270	EWOF1201	1	=ES+S/81.1	Busbar connection point	63A / 60mm System 54mm breit f. Siemens S2	455	Wöhner
QZ1.67	200011491	ESJK0002	2	=ES+S/81.1	Terminals Cover	für Schütz S2	3RT1936-4EA2	Siemens
QZ1.73	200011658	ESJQ3450	1	=ES+S/88.1	power circuit breaker	36 - 45 A	3RV1031-4GA10	Siemens
QZ1.73	200011644	ESJQ3312	1	=ES+S/88.1	auxiliary contact	querliegend	3RV1901-1E	Siemens
QZ1.73	200011647	ESJQ3315	1	=ES+S/88.1	Connector	Schütz S2 - DC - Leistungsschalter S2	3RA1931-1B	Siemens
QZ1.73	200013270	EWOF1201	1	=ES+S/88.1	Busbar connection point	63A / 60mm System 54mm breit f. Siemens S2	455	Wöhner
QZ1.73	200011491	ESJK0002	2	=ES+S/88.1	Terminals Cover	für Schütz S2	3RT1936-4EA2	Siemens
QZ1.79	200011658	ESJQ3450	1	=ES+S/95.1	power circuit breaker	36 - 45 A	3RV1031-4GA10	Siemens
QZ1.79	200011644	ESJQ3312	1	=ES+S/95.1	auxiliary contact	querliegend	3RV1901-1E	Siemens
QZ1.79	200011647	ESJQ3315	1	=ES+S/95.1	Connector	Schütz S2 - DC - Leistungsschalter S2	3RA1931-1B	Siemens
QZ1.79	200013270	EWOF1201	1	=ES+S/95.1	Busbar connection point	63A / 60mm System 54mm breit f. Siemens S2	455	Wöhner
QZ1.79	200011491	ESJK0002	2	=ES+S/95.1	Terminals Cover	für Schütz S2	3RT1936-4EA2	Siemens
QZ1.85	200011658	ESJQ3450	1	=ES+S/102.1	power circuit breaker	36 - 45 A	3RV1031-4GA10	Siemens
QZ1.85	200011644	ESJQ3312	1	=ES+S/102.1	auxiliary contact	querliegend	3RV1901-1E	Siemens
QZ1.85	200011647	ESJQ3315	1	=ES+S/102.1	Connector	Schütz S2 - DC - Leistungsschalter S2	3RA1931-1B	Siemens
QZ1.85	200013270	EWOF1201	1	=ES+S/102.1	Busbar connection point	63A / 60mm System 54mm breit f. Siemens S2	455	Wöhner
QZ1.85	200011491	ESJK0002	2	=ES+S/102.1	Terminals Cover	für Schütz S2	3RT1936-4EA2	Siemens

Parts list

electrical construction

Artilelstückliste_Elo_SAP_001

DT	Part number new	Part number old	Quantity	Placement	Designation 1	Designation 2	Order number	Manufacturer
QZ1.91	200011658	ESJQ3450	1	=ES+S/109.1	power circuit breaker	36 - 45 A	3RV1031-4GA10	Siemens
QZ1.91	200011644	ESJQ3312	1	=ES+S/109.1	auxiliary contact	querliegend	3RV1901-1E	Siemens
QZ1.91	200011647	ESJQ3315	1	=ES+S/109.1	Connector	Schütz S2 - DC - Leistungsschalter S2	3RA1931-1B	Siemens
QZ1.91	200013270	EWOF1201	1	=ES+S/109.1	Busbar connection point	63A / 60mm System 54mm breit f. Siemens S2	455	Wöhner
QZ1.91	200011491	ESJK0002	2	=ES+S/109.1	Terminals Cover	für Schütz S2	3RT1936-4EA2	Siemens
QZ1.97	200011658	ESJQ3450	1	=ES+S/109.6	power circuit breaker	36 - 45 A	3RV1031-4GA10	Siemens
QZ1.97	200011644	ESJQ3312	1	=ES+S/109.6	auxiliary contact	querliegend	3RV1901-1E	Siemens
QZ1.97	200011647	ESJQ3315	1	=ES+S/109.6	Connector	Schütz S2 - DC - Leistungsschalter S2	3RA1931-1B	Siemens
QZ1.97	200013270	EWOF1201	1	=ES+S/109.6	Busbar connection point	63A / 60mm System 54mm breit f. Siemens S2	455	Wöhner
QZ1.97	200011491	ESJK0002	2	=ES+S/109.6	Terminals Cover	für Schütz S2	3RT1936-4EA2	Siemens
QZ1.101	200011659	ESJQ3500	1	=ES+S/116.1	power circuit breaker	40 - 50 A	3RV1031-4HA10	Siemens
QZ1.101	200011644	ESJQ3312	1	=ES+S/116.1	auxiliary contact	querliegend	3RV1901-1E	Siemens
QZ1.101	200011647	ESJQ3315	1	=ES+S/116.1	Connector	Schütz S2 - DC - Leistungsschalter S2	3RA1931-1B	Siemens
QZ1.101	200013270	EWOF1201	1	=ES+S/116.1	Busbar connection point	63A / 60mm System 54mm breit f. Siemens S2	455	Wöhner
QZ1.101	200011491	ESJK0002	2	=ES+S/116.1	Terminals Cover	für Schütz S2	3RT1936-4EA2	Siemens
QZ2.1	200011658	ESJQ3450	1	=ES+S/116.3	power circuit breaker	36 - 45 A	3RV1031-4GA10	Siemens
QZ2.1	200011644	ESJQ3312	1	=ES+S/116.3	auxiliary contact	querliegend	3RV1901-1E	Siemens
QZ2.1	200011647	ESJQ3315	1	=ES+S/116.3	Connector	Schütz S2 - DC - Leistungsschalter S2	3RA1931-1B	Siemens
QZ2.1	200013270	EWOF1201	1	=ES+S/116.3	Busbar connection point	63A / 60mm System 54mm breit f. Siemens S2	455	Wöhner
QZ2.1	200011491	ESJK0002	2	=ES+S/116.3	Terminals Cover	für Schütz S2	3RT1936-4EA2	Siemens
QZ2.6	200011659	ESJQ3500	1	=ES+S/124.1	power circuit breaker	40 - 50 A	3RV1031-4HA10	Siemens
QZ2.6	200011644	ESJQ3312	1	=ES+S/124.1	auxiliary contact	querliegend	3RV1901-1E	Siemens
QZ2.6	200011647	ESJQ3315	1	=ES+S/124.1	Connector	Schütz S2 - DC - Leistungsschalter S2	3RA1931-1B	Siemens
QZ2.6	200013270	EWOF1201	1	=ES+S/124.1	Busbar connection point	63A / 60mm System 54mm breit f. Siemens S2	455	Wöhner
QZ2.6	200011491	ESJK0002	2	=ES+S/124.1	Terminals Cover	für Schütz S2	3RT1936-4EA2	Siemens
QZ2.11	200011658	ESJQ3450	1	=ES+S/132.1	power circuit breaker	36 - 45 A	3RV1031-4GA10	Siemens
QZ2.11	200011644	ESJQ3312	1	=ES+S/132.1	auxiliary contact	querliegend	3RV1901-1E	Siemens
QZ2.11	200011647	ESJQ3315	1	=ES+S/132.1	Connector	Schütz S2 - DC - Leistungsschalter S2	3RA1931-1B	Siemens
QZ2.11	200013270	EWOF1201	1	=ES+S/132.1	Busbar connection point	63A / 60mm System 54mm breit f. Siemens S2	455	Wöhner
QZ2.11	200011491	ESJK0002	2	=ES+S/132.1	Terminals Cover	für Schütz S2	3RT1936-4EA2	Siemens
QZ2.17	200011658	ESJQ3450	1	=ES+S/139.1	power circuit breaker	36 - 45 A	3RV1031-4GA10	Siemens
QZ2.17	200011644	ESJQ3312	1	=ES+S/139.1	auxiliary contact	querliegend	3RV1901-1E	Siemens
QZ2.17	200011647	ESJQ3315	1	=ES+S/139.1	Connector	Schütz S2 - DC - Leistungsschalter S2	3RA1931-1B	Siemens
QZ2.17	200013270	EWOF1201	1	=ES+S/139.1	Busbar connection point	63A / 60mm System 54mm breit f. Siemens S2	455	Wöhner
QZ2.17	200011491	ESJK0002	2	=ES+S/139.1	Terminals Cover	für Schütz S2	3RT1936-4EA2	Siemens
QZ2.23	200011658	ESJQ3450	1	=ES+S/146.1	power circuit breaker	36 - 45 A	3RV1031-4GA10	Siemens
QZ2.23	200011644	ESJQ3312	1	=ES+S/146.1	auxiliary contact	querliegend	3RV1901-1E	Siemens
QZ2.23	200011647	ESJQ3315	1	=ES+S/146.1	Connector	Schütz S2 - DC - Leistungsschalter S2	3RA1931-1B	Siemens

Parts list

electrical construction

Artilelstückliste_Elo_SAP_001

DT	Part number new	Part number old	Quantity	Placement	Designation 1	Designation 2	Order number	Manufacturer
QZ2.23	200013270	EWOF1201	1	=ES+S/146.1	Busbar connection point	63A / 60mm System 54mm breit f. Siemens S2	455	Wöhner
QZ2.23	200011491	ESJK0002	2	=ES+S/146.1	Terminals Cover	für Schütz S2	3RT1936-4EA2	Siemens
QZ2.29	200011658	ESJQ3450	1	=ES+S/153.1	power circuit breaker	36 - 45 A	3RV1031-4GA10	Siemens
QZ2.29	200011644	ESJQ3312	1	=ES+S/153.1	auxiliary contact	querliegend	3RV1901-1E	Siemens
QZ2.29	200011647	ESJQ3315	1	=ES+S/153.1	Connector	Schütz S2 - DC - Leistungsschalter S2	3RA1931-1B	Siemens
QZ2.29	200013270	EWOF1201	1	=ES+S/153.1	Busbar connection point	63A / 60mm System 54mm breit f. Siemens S2	455	Wöhner
QZ2.29	200011491	ESJK0002	2	=ES+S/153.1	Terminals Cover	für Schütz S2	3RT1936-4EA2	Siemens
QZ2.35	200011658	ESJQ3450	1	=ES+S/160.1	power circuit breaker	36 - 45 A	3RV1031-4GA10	Siemens
QZ2.35	200011644	ESJQ3312	1	=ES+S/160.1	auxiliary contact	querliegend	3RV1901-1E	Siemens
QZ2.35	200011647	ESJQ3315	1	=ES+S/160.1	Connector	Schütz S2 - DC - Leistungsschalter S2	3RA1931-1B	Siemens
QZ2.35	200013270	EWOF1201	1	=ES+S/160.1	Busbar connection point	63A / 60mm System 54mm breit f. Siemens S2	455	Wöhner
QZ2.35	200011491	ESJK0002	2	=ES+S/160.1	Terminals Cover	für Schütz S2	3RT1936-4EA2	Siemens
QZ2.41	200011658	ESJQ3450	1	=ES+S/167.1	power circuit breaker	36 - 45 A	3RV1031-4GA10	Siemens
QZ2.41	200011644	ESJQ3312	1	=ES+S/167.1	auxiliary contact	querliegend	3RV1901-1E	Siemens
QZ2.41	200011647	ESJQ3315	1	=ES+S/167.1	Connector	Schütz S2 - DC - Leistungsschalter S2	3RA1931-1B	Siemens
QZ2.41	200013270	EWOF1201	1	=ES+S/167.1	Busbar connection point	63A / 60mm System 54mm breit f. Siemens S2	455	Wöhner
QZ2.41	200011491	ESJK0002	2	=ES+S/167.1	Terminals Cover	für Schütz S2	3RT1936-4EA2	Siemens
QZ2.47	200011658	ESJQ3450	1	=ES+S/174.1	power circuit breaker	36 - 45 A	3RV1031-4GA10	Siemens
QZ2.47	200011644	ESJQ3312	1	=ES+S/174.1	auxiliary contact	querliegend	3RV1901-1E	Siemens
QZ2.47	200011647	ESJQ3315	1	=ES+S/174.1	Connector	Schütz S2 - DC - Leistungsschalter S2	3RA1931-1B	Siemens
QZ2.47	200013270	EWOF1201	1	=ES+S/174.1	Busbar connection point	63A / 60mm System 54mm breit f. Siemens S2	455	Wöhner
QZ2.47	200011491	ESJK0002	2	=ES+S/174.1	Terminals Cover	für Schütz S2	3RT1936-4EA2	Siemens
QZ2.53	200011658	ESJQ3450	1	=ES+S/181.1	power circuit breaker	36 - 45 A	3RV1031-4GA10	Siemens
QZ2.53	200011644	ESJQ3312	1	=ES+S/181.1	auxiliary contact	querliegend	3RV1901-1E	Siemens
QZ2.53	200011647	ESJQ3315	1	=ES+S/181.1	Connector	Schütz S2 - DC - Leistungsschalter S2	3RA1931-1B	Siemens
QZ2.53	200013270	EWOF1201	1	=ES+S/181.1	Busbar connection point	63A / 60mm System 54mm breit f. Siemens S2	455	Wöhner
QZ2.53	200011491	ESJK0002	2	=ES+S/181.1	Terminals Cover	für Schütz S2	3RT1936-4EA2	Siemens
QZ2.59	200011658	ESJQ3450	1	=ES+S/188.1	power circuit breaker	36 - 45 A	3RV1031-4GA10	Siemens
QZ2.59	200011644	ESJQ3312	1	=ES+S/188.1	auxiliary contact	querliegend	3RV1901-1E	Siemens
QZ2.59	200011647	ESJQ3315	1	=ES+S/188.1	Connector	Schütz S2 - DC - Leistungsschalter S2	3RA1931-1B	Siemens
QZ2.59	200013270	EWOF1201	1	=ES+S/188.1	Busbar connection point	63A / 60mm System 54mm breit f. Siemens S2	455	Wöhner
QZ2.59	200011491	ESJK0002	2	=ES+S/188.1	Terminals Cover	für Schütz S2	3RT1936-4EA2	Siemens
QZM1.1	200011564	ESJK9322	1	=ES+S/270.1	power contactor	22kW / 24 VDC	3RT1036-1BB40	Siemens
QZM1.1	200011694	ESJZ9103	1	=ES+S/270.1	RC network	S2,3 / 24V AC/DC	3RT19 36-1CB00	Siemens
QZM1.7	200011564	ESJK9322	1	=ES+S/270.1	power contactor	22kW / 24 VDC	3RT1036-1BB40	Siemens
QZM1.7	200011694	ESJZ9103	1	=ES+S/270.1	RC network	S2,3 / 24V AC/DC	3RT19 36-1CB00	Siemens
QZM1.13	200011564	ESJK9322	1	=ES+S/270.2	power contactor	22kW / 24 VDC	3RT1036-1BB40	Siemens
QZM1.13	200011694	ESJZ9103	1	=ES+S/270.2	RC network	S2,3 / 24V AC/DC	3RT19 36-1CB00	Siemens

Parts list

electrical construction

Artilelstückliste_Elo_SAP_001

DT	Part number new	Part number old	Quantity	Placement	Designation 1	Designation 2	Order number	Manufacturer
QZM1.19	200011564	ESJK9322	1	=ES+S/270.3	power contactor	22kW / 24 VDC	3RT1036-1BB40	Siemens
QZM1.19	200011694	ESJZ9103	1	=ES+S/270.3	RC network	S2,3 / 24V AC/DC	3RT19 36-1CB00	Siemens
QZM1.25	200011564	ESJK9322	1	=ES+S/270.4	power contactor	22kW / 24 VDC	3RT1036-1BB40	Siemens
QZM1.25	200011694	ESJZ9103	1	=ES+S/270.4	RC network	S2,3 / 24V AC/DC	3RT19 36-1CB00	Siemens
QZM1.31	200011564	ESJK9322	1	=ES+S/270.4	power contactor	22kW / 24 VDC	3RT1036-1BB40	Siemens
QZM1.31	200011694	ESJZ9103	1	=ES+S/270.4	RC network	S2,3 / 24V AC/DC	3RT19 36-1CB00	Siemens
QZM1.37	200011564	ESJK9322	1	=ES+S/270.5	power contactor	22kW / 24 VDC	3RT1036-1BB40	Siemens
QZM1.37	200011694	ESJZ9103	1	=ES+S/270.5	RC network	S2,3 / 24V AC/DC	3RT19 36-1CB00	Siemens
QZM1.43	200011564	ESJK9322	1	=ES+S/270.6	power contactor	22kW / 24 VDC	3RT1036-1BB40	Siemens
QZM1.43	200011694	ESJZ9103	1	=ES+S/270.6	RC network	S2,3 / 24V AC/DC	3RT19 36-1CB00	Siemens
QZM1.49	200011564	ESJK9322	1	=ES+S/270.7	power contactor	22kW / 24 VDC	3RT1036-1BB40	Siemens
QZM1.49	200011694	ESJZ9103	1	=ES+S/270.7	RC network	S2,3 / 24V AC/DC	3RT19 36-1CB00	Siemens
QZM1.55	200011564	ESJK9322	1	=ES+S/270.7	power contactor	22kW / 24 VDC	3RT1036-1BB40	Siemens
QZM1.55	200011694	ESJZ9103	1	=ES+S/270.7	RC network	S2,3 / 24V AC/DC	3RT19 36-1CB00	Siemens
QZM1.61	200011564	ESJK9322	1	=ES+S/270.8	power contactor	22kW / 24 VDC	3RT1036-1BB40	Siemens
QZM1.61	200011694	ESJZ9103	1	=ES+S/270.8	RC network	S2,3 / 24V AC/DC	3RT19 36-1CB00	Siemens
QZM1.67	200011564	ESJK9322	1	=ES+S/270.9	power contactor	22kW / 24 VDC	3RT1036-1BB40	Siemens
QZM1.67	200011694	ESJZ9103	1	=ES+S/270.9	RC network	S2,3 / 24V AC/DC	3RT19 36-1CB00	Siemens
QZM1.73	200011564	ESJK9322	1	=ES+S/271.0	power contactor	22kW / 24 VDC	3RT1036-1BB40	Siemens
QZM1.73	200011694	ESJZ9103	1	=ES+S/271.0	RC network	S2,3 / 24V AC/DC	3RT19 36-1CB00	Siemens
QZM1.79	200011564	ESJK9322	1	=ES+S/271.1	power contactor	22kW / 24 VDC	3RT1036-1BB40	Siemens
QZM1.79	200011694	ESJZ9103	1	=ES+S/271.1	RC network	S2,3 / 24V AC/DC	3RT19 36-1CB00	Siemens
QZM1.85	200011564	ESJK9322	1	=ES+S/271.2	power contactor	22kW / 24 VDC	3RT1036-1BB40	Siemens
QZM1.85	200011694	ESJZ9103	1	=ES+S/271.2	RC network	S2,3 / 24V AC/DC	3RT19 36-1CB00	Siemens
QZM1.91	200011564	ESJK9322	1	=ES+S/271.3	power contactor	22kW / 24 VDC	3RT1036-1BB40	Siemens
QZM1.91	200011694	ESJZ9103	1	=ES+S/271.3	RC network	S2,3 / 24V AC/DC	3RT19 36-1CB00	Siemens
QZM1.97	200011564	ESJK9322	1	=ES+S/271.4	power contactor	22kW / 24 VDC	3RT1036-1BB40	Siemens
QZM1.97	200011694	ESJZ9103	1	=ES+S/271.4	RC network	S2,3 / 24V AC/DC	3RT19 36-1CB00	Siemens
QZM1.99	200011564	ESJK9322	1	=ES+S/271.5	power contactor	22kW / 24 VDC	3RT1036-1BB40	Siemens
QZM1.99	200011694	ESJZ9103	1	=ES+S/271.5	RC network	S2,3 / 24V AC/DC	3RT19 36-1CB00	Siemens
QZM1.99	200011491	ESJK0002	2	=ES+S/271.5	Terminals Cover	für Schütz S2	3RT1936-4EA2	Siemens
QZM1.101	200011564	ESJK9322	1	=ES+S/271.6	power contactor	22kW / 24 VDC	3RT1036-1BB40	Siemens
QZM1.101	200011694	ESJZ9103	1	=ES+S/271.6	RC network	S2,3 / 24V AC/DC	3RT19 36-1CB00	Siemens
QZM2.1	200011564	ESJK9322	1	=ES+S/272.1	power contactor	22kW / 24 VDC	3RT1036-1BB40	Siemens
QZM2.1	200011694	ESJZ9103	1	=ES+S/272.1	RC network	S2,3 / 24V AC/DC	3RT19 36-1CB00	Siemens
QZM2.6	200011564	ESJK9322	1	=ES+S/272.2	power contactor	22kW / 24 VDC	3RT1036-1BB40	Siemens
QZM2.6	200011694	ESJZ9103	1	=ES+S/272.2	RC network	S2,3 / 24V AC/DC	3RT19 36-1CB00	Siemens
QZM2.11	200011564	ESJK9322	1	=ES+S/272.2	power contactor	22kW / 24 VDC	3RT1036-1BB40	Siemens

Parts list

electrical construction

Artilelstückliste_Elo_SAP_001

DT	Part number new	old	Quantity	Placement	Designation 1	Designation 2	Order number	Manufacturer
QZM2.11	200011694	ESJZ9103	1	=ES+S/272.2	RC network	S2,3 / 24V AC/DC	3RT19 36-1CB00	Siemens
QZM2.17	200011564	ESJK9322	1	=ES+S/272.3	power contactor	22kW / 24 VDC	3RT1036-1BB40	Siemens
QZM2.17	200011694	ESJZ9103	1	=ES+S/272.3	RC network	S2,3 / 24V AC/DC	3RT19 36-1CB00	Siemens
QZM2.23	200011564	ESJK9322	1	=ES+S/272.4	power contactor	22kW / 24 VDC	3RT1036-1BB40	Siemens
QZM2.23	200011694	ESJZ9103	1	=ES+S/272.4	RC network	S2,3 / 24V AC/DC	3RT19 36-1CB00	Siemens
QZM2.29	200011564	ESJK9322	1	=ES+S/272.5	power contactor	22kW / 24 VDC	3RT1036-1BB40	Siemens
QZM2.29	200011694	ESJZ9103	1	=ES+S/272.5	RC network	S2,3 / 24V AC/DC	3RT19 36-1CB00	Siemens
QZM2.35	200011564	ESJK9322	1	=ES+S/272.5	power contactor	22kW / 24 VDC	3RT1036-1BB40	Siemens
QZM2.35	200011694	ESJZ9103	1	=ES+S/272.5	RC network	S2,3 / 24V AC/DC	3RT19 36-1CB00	Siemens
QZM2.41	200011564	ESJK9322	1	=ES+S/272.6	power contactor	22kW / 24 VDC	3RT1036-1BB40	Siemens
QZM2.41	200011694	ESJZ9103	1	=ES+S/272.6	RC network	S2,3 / 24V AC/DC	3RT19 36-1CB00	Siemens
QZM2.47	200011564	ESJK9322	1	=ES+S/272.7	power contactor	22kW / 24 VDC	3RT1036-1BB40	Siemens
QZM2.47	200011694	ESJZ9103	1	=ES+S/272.7	RC network	S2,3 / 24V AC/DC	3RT19 36-1CB00	Siemens
QZM2.53	200011564	ESJK9322	1	=ES+S/272.8	power contactor	22kW / 24 VDC	3RT1036-1BB40	Siemens
QZM2.53	200011694	ESJZ9103	1	=ES+S/272.8	RC network	S2,3 / 24V AC/DC	3RT19 36-1CB00	Siemens
QZM2.59	200011564	ESJK9322	1	=ES+S/272.8	power contactor	22kW / 24 VDC	3RT1036-1BB40	Siemens
QZM2.59	200011694	ESJZ9103	1	=ES+S/272.8	RC network	S2,3 / 24V AC/DC	3RT19 36-1CB00	Siemens
R1.1	200010916	ESIR4301	1	=ES+S/3.1	brake resistor	380-480 V PK 100W KONT	6SE6400-4BD11-0AA0	Siemens
R1.2	200010916	ESIR4301	1	=ES+S/4.1	brake resistor	380-480 V PK 100W KONT	6SE6400-4BD11-0AA0	Siemens
R1.3	200010916	ESIR4301	1	=ES+S/5.1	brake resistor	380-480 V PK 100W KONT	6SE6400-4BD11-0AA0	Siemens
R1.4	200010916	ESIR4301	1	=ES+S/6.1	brake resistor	380-480 V PK 100W KONT	6SE6400-4BD11-0AA0	Siemens
R1.5	200010916	ESIR4301	1	=ES+S/7.1	brake resistor	380-480 V PK 100W KONT	6SE6400-4BD11-0AA0	Siemens
R1.6	200010916	ESIR4301	1	=ES+S/8.1	brake resistor	380-480 V PK 100W KONT	6SE6400-4BD11-0AA0	Siemens
R1.7	200010916	ESIR4301	1	=ES+S/10.1	brake resistor	380-480 V PK 100W KONT	6SE6400-4BD11-0AA0	Siemens
R1.8	200010916	ESIR4301	1	=ES+S/11.1	brake resistor	380-480 V PK 100W KONT	6SE6400-4BD11-0AA0	Siemens
R1.9	200010916	ESIR4301	1	=ES+S/12.1	brake resistor	380-480 V PK 100W KONT	6SE6400-4BD11-0AA0	Siemens
R1.10	200010916	ESIR4301	1	=ES+S/13.1	brake resistor	380-480 V PK 100W KONT	6SE6400-4BD11-0AA0	Siemens
R1.11	200010916	ESIR4301	1	=ES+S/14.1	brake resistor	380-480 V PK 100W KONT	6SE6400-4BD11-0AA0	Siemens
R1.12	200010916	ESIR4301	1	=ES+S/15.1	brake resistor	380-480 V PK 100W KONT	6SE6400-4BD11-0AA0	Siemens
R1.13	200010916	ESIR4301	1	=ES+S/17.1	brake resistor	380-480 V PK 100W KONT	6SE6400-4BD11-0AA0	Siemens
R1.14	200010916	ESIR4301	1	=ES+S/18.1	brake resistor	380-480 V PK 100W KONT	6SE6400-4BD11-0AA0	Siemens
R1.15	200010916	ESIR4301	1	=ES+S/19.1	brake resistor	380-480 V PK 100W KONT	6SE6400-4BD11-0AA0	Siemens
R1.16	200010916	ESIR4301	1	=ES+S/20.1	brake resistor	380-480 V PK 100W KONT	6SE6400-4BD11-0AA0	Siemens
R1.17	200010916	ESIR4301	1	=ES+S/21.1	brake resistor	380-480 V PK 100W KONT	6SE6400-4BD11-0AA0	Siemens
R1.18	200010916	ESIR4301	1	=ES+S/22.1	brake resistor	380-480 V PK 100W KONT	6SE6400-4BD11-0AA0	Siemens
R1.19	200010916	ESIR4301	1	=ES+S/24.1	brake resistor	380-480 V PK 100W KONT	6SE6400-4BD11-0AA0	Siemens
R1.20	200010916	ESIR4301	1	=ES+S/25.1	brake resistor	380-480 V PK 100W KONT	6SE6400-4BD11-0AA0	Siemens
R1.21	200010916	ESIR4301	1	=ES+S/26.1	brake resistor	380-480 V PK 100W KONT	6SE6400-4BD11-0AA0	Siemens

Parts list

electrical construction

Artilelstückliste_Elo_SAP_001

DT	Part number new	Part number old	Quantity	Placement	Designation 1	Designation 2	Order number	Manufacturer
R1.22	200010916	ESIR4301	1	=ES+S/27.1	brake resistor	380-480 V PK 100W KONT	6SE6400-4BD11-0AA0	Siemens
R1.23	200010916	ESIR4301	1	=ES+S/28.1	brake resistor	380-480 V PK 100W KONT	6SE6400-4BD11-0AA0	Siemens
R1.24	200010916	ESIR4301	1	=ES+S/29.1	brake resistor	380-480 V PK 100W KONT	6SE6400-4BD11-0AA0	Siemens
R1.25	200010916	ESIR4301	1	=ES+S/31.1	brake resistor	380-480 V PK 100W KONT	6SE6400-4BD11-0AA0	Siemens
R1.26	200010916	ESIR4301	1	=ES+S/32.1	brake resistor	380-480 V PK 100W KONT	6SE6400-4BD11-0AA0	Siemens
R1.27	200010916	ESIR4301	1	=ES+S/33.1	brake resistor	380-480 V PK 100W KONT	6SE6400-4BD11-0AA0	Siemens
R1.28	200010916	ESIR4301	1	=ES+S/34.1	brake resistor	380-480 V PK 100W KONT	6SE6400-4BD11-0AA0	Siemens
R1.29	200010916	ESIR4301	1	=ES+S/35.1	brake resistor	380-480 V PK 100W KONT	6SE6400-4BD11-0AA0	Siemens
R1.30	200010916	ESIR4301	1	=ES+S/36.1	brake resistor	380-480 V PK 100W KONT	6SE6400-4BD11-0AA0	Siemens
R1.31	200010916	ESIR4301	1	=ES+S/38.1	brake resistor	380-480 V PK 100W KONT	6SE6400-4BD11-0AA0	Siemens
R1.32	200010916	ESIR4301	1	=ES+S/39.1	brake resistor	380-480 V PK 100W KONT	6SE6400-4BD11-0AA0	Siemens
R1.33	200010916	ESIR4301	1	=ES+S/40.1	brake resistor	380-480 V PK 100W KONT	6SE6400-4BD11-0AA0	Siemens
R1.34	200010916	ESIR4301	1	=ES+S/41.1	brake resistor	380-480 V PK 100W KONT	6SE6400-4BD11-0AA0	Siemens
R1.35	200010916	ESIR4301	1	=ES+S/42.1	brake resistor	380-480 V PK 100W KONT	6SE6400-4BD11-0AA0	Siemens
R1.36	200010916	ESIR4301	1	=ES+S/43.1	brake resistor	380-480 V PK 100W KONT	6SE6400-4BD11-0AA0	Siemens
R1.37	200010916	ESIR4301	1	=ES+S/45.1	brake resistor	380-480 V PK 100W KONT	6SE6400-4BD11-0AA0	Siemens
R1.38	200010916	ESIR4301	1	=ES+S/46.1	brake resistor	380-480 V PK 100W KONT	6SE6400-4BD11-0AA0	Siemens
R1.39	200010916	ESIR4301	1	=ES+S/47.1	brake resistor	380-480 V PK 100W KONT	6SE6400-4BD11-0AA0	Siemens
R1.40	200010916	ESIR4301	1	=ES+S/48.1	brake resistor	380-480 V PK 100W KONT	6SE6400-4BD11-0AA0	Siemens
R1.41	200010916	ESIR4301	1	=ES+S/49.1	brake resistor	380-480 V PK 100W KONT	6SE6400-4BD11-0AA0	Siemens
R1.42	200010916	ESIR4301	1	=ES+S/50.1	brake resistor	380-480 V PK 100W KONT	6SE6400-4BD11-0AA0	Siemens
R1.43	200010916	ESIR4301	1	=ES+S/52.1	brake resistor	380-480 V PK 100W KONT	6SE6400-4BD11-0AA0	Siemens
R1.44	200010916	ESIR4301	1	=ES+S/53.1	brake resistor	380-480 V PK 100W KONT	6SE6400-4BD11-0AA0	Siemens
R1.45	200010916	ESIR4301	1	=ES+S/54.1	brake resistor	380-480 V PK 100W KONT	6SE6400-4BD11-0AA0	Siemens
R1.46	200010916	ESIR4301	1	=ES+S/55.1	brake resistor	380-480 V PK 100W KONT	6SE6400-4BD11-0AA0	Siemens
R1.47	200010916	ESIR4301	1	=ES+S/56.1	brake resistor	380-480 V PK 100W KONT	6SE6400-4BD11-0AA0	Siemens
R1.48	200010916	ESIR4301	1	=ES+S/57.1	brake resistor	380-480 V PK 100W KONT	6SE6400-4BD11-0AA0	Siemens
R1.49	200010916	ESIR4301	1	=ES+S/59.1	brake resistor	380-480 V PK 100W KONT	6SE6400-4BD11-0AA0	Siemens
R1.50	200010916	ESIR4301	1	=ES+S/60.1	brake resistor	380-480 V PK 100W KONT	6SE6400-4BD11-0AA0	Siemens
R1.51	200010916	ESIR4301	1	=ES+S/61.1	brake resistor	380-480 V PK 100W KONT	6SE6400-4BD11-0AA0	Siemens
R1.52	200010916	ESIR4301	1	=ES+S/62.1	brake resistor	380-480 V PK 100W KONT	6SE6400-4BD11-0AA0	Siemens
R1.53	200010916	ESIR4301	1	=ES+S/63.1	brake resistor	380-480 V PK 100W KONT	6SE6400-4BD11-0AA0	Siemens
R1.54	200010916	ESIR4301	1	=ES+S/64.1	brake resistor	380-480 V PK 100W KONT	6SE6400-4BD11-0AA0	Siemens
R1.55	200010916	ESIR4301	1	=ES+S/68.1	brake resistor	380-480 V PK 100W KONT	6SE6400-4BD11-0AA0	Siemens
R1.56	200010916	ESIR4301	1	=ES+S/69.1	brake resistor	380-480 V PK 100W KONT	6SE6400-4BD11-0AA0	Siemens
R1.57	200010916	ESIR4301	1	=ES+S/70.1	brake resistor	380-480 V PK 100W KONT	6SE6400-4BD11-0AA0	Siemens
R1.58	200010916	ESIR4301	1	=ES+S/71.1	brake resistor	380-480 V PK 100W KONT	6SE6400-4BD11-0AA0	Siemens
R1.59	200010916	ESIR4301	1	=ES+S/72.1	brake resistor	380-480 V PK 100W KONT	6SE6400-4BD11-0AA0	Siemens

Parts list

electrical construction

Artilelstückliste_Elo_SAP_001

DT	Part number new	Part number old	Quantity	Placement	Designation 1	Designation 2	Order number	Manufacturer
R1.60	200010916	ESIR4301	1	=ES+S/73.1	brake resistor	380-480 V PK 100W KONT	6SE6400-4BD11-0AA0	Siemens
R1.61	200010916	ESIR4301	1	=ES+S/75.1	brake resistor	380-480 V PK 100W KONT	6SE6400-4BD11-0AA0	Siemens
R1.62	200010916	ESIR4301	1	=ES+S/76.1	brake resistor	380-480 V PK 100W KONT	6SE6400-4BD11-0AA0	Siemens
R1.63	200010916	ESIR4301	1	=ES+S/77.1	brake resistor	380-480 V PK 100W KONT	6SE6400-4BD11-0AA0	Siemens
R1.64	200010916	ESIR4301	1	=ES+S/78.1	brake resistor	380-480 V PK 100W KONT	6SE6400-4BD11-0AA0	Siemens
R1.65	200010916	ESIR4301	1	=ES+S/79.1	brake resistor	380-480 V PK 100W KONT	6SE6400-4BD11-0AA0	Siemens
R1.66	200010916	ESIR4301	1	=ES+S/80.1	brake resistor	380-480 V PK 100W KONT	6SE6400-4BD11-0AA0	Siemens
R1.67	200010916	ESIR4301	1	=ES+S/82.1	brake resistor	380-480 V PK 100W KONT	6SE6400-4BD11-0AA0	Siemens
R1.68	200010916	ESIR4301	1	=ES+S/83.1	brake resistor	380-480 V PK 100W KONT	6SE6400-4BD11-0AA0	Siemens
R1.69	200010916	ESIR4301	1	=ES+S/84.1	brake resistor	380-480 V PK 100W KONT	6SE6400-4BD11-0AA0	Siemens
R1.70	200010916	ESIR4301	1	=ES+S/85.1	brake resistor	380-480 V PK 100W KONT	6SE6400-4BD11-0AA0	Siemens
R1.71	200010916	ESIR4301	1	=ES+S/86.1	brake resistor	380-480 V PK 100W KONT	6SE6400-4BD11-0AA0	Siemens
R1.72	200010916	ESIR4301	1	=ES+S/87.1	brake resistor	380-480 V PK 100W KONT	6SE6400-4BD11-0AA0	Siemens
R1.73	200010916	ESIR4301	1	=ES+S/89.1	brake resistor	380-480 V PK 100W KONT	6SE6400-4BD11-0AA0	Siemens
R1.74	200010916	ESIR4301	1	=ES+S/90.1	brake resistor	380-480 V PK 100W KONT	6SE6400-4BD11-0AA0	Siemens
R1.75	200010916	ESIR4301	1	=ES+S/91.1	brake resistor	380-480 V PK 100W KONT	6SE6400-4BD11-0AA0	Siemens
R1.76	200010916	ESIR4301	1	=ES+S/92.1	brake resistor	380-480 V PK 100W KONT	6SE6400-4BD11-0AA0	Siemens
R1.77	200010916	ESIR4301	1	=ES+S/93.1	brake resistor	380-480 V PK 100W KONT	6SE6400-4BD11-0AA0	Siemens
R1.78	200010916	ESIR4301	1	=ES+S/94.1	brake resistor	380-480 V PK 100W KONT	6SE6400-4BD11-0AA0	Siemens
R1.79	200010916	ESIR4301	1	=ES+S/96.1	brake resistor	380-480 V PK 100W KONT	6SE6400-4BD11-0AA0	Siemens
R1.80	200010916	ESIR4301	1	=ES+S/97.1	brake resistor	380-480 V PK 100W KONT	6SE6400-4BD11-0AA0	Siemens
R1.81	200010916	ESIR4301	1	=ES+S/98.1	brake resistor	380-480 V PK 100W KONT	6SE6400-4BD11-0AA0	Siemens
R1.82	200010916	ESIR4301	1	=ES+S/99.1	brake resistor	380-480 V PK 100W KONT	6SE6400-4BD11-0AA0	Siemens
R1.83	200010916	ESIR4301	1	=ES+S/100.1	brake resistor	380-480 V PK 100W KONT	6SE6400-4BD11-0AA0	Siemens
R1.84	200010916	ESIR4301	1	=ES+S/101.1	brake resistor	380-480 V PK 100W KONT	6SE6400-4BD11-0AA0	Siemens
R1.85	200010916	ESIR4301	1	=ES+S/103.1	brake resistor	380-480 V PK 100W KONT	6SE6400-4BD11-0AA0	Siemens
R1.86	200010916	ESIR4301	1	=ES+S/104.1	brake resistor	380-480 V PK 100W KONT	6SE6400-4BD11-0AA0	Siemens
R1.87	200010916	ESIR4301	1	=ES+S/105.1	brake resistor	380-480 V PK 100W KONT	6SE6400-4BD11-0AA0	Siemens
R1.88	200010916	ESIR4301	1	=ES+S/106.1	brake resistor	380-480 V PK 100W KONT	6SE6400-4BD11-0AA0	Siemens
R1.89	200010916	ESIR4301	1	=ES+S/107.1	brake resistor	380-480 V PK 100W KONT	6SE6400-4BD11-0AA0	Siemens
R1.90	200010916	ESIR4301	1	=ES+S/108.1	brake resistor	380-480 V PK 100W KONT	6SE6400-4BD11-0AA0	Siemens
R1.91	200010916	ESIR4301	1	=ES+S/110.1	brake resistor	380-480 V PK 100W KONT	6SE6400-4BD11-0AA0	Siemens
R1.92	200010916	ESIR4301	1	=ES+S/111.1	brake resistor	380-480 V PK 100W KONT	6SE6400-4BD11-0AA0	Siemens
R1.93	200010916	ESIR4301	1	=ES+S/112.1	brake resistor	380-480 V PK 100W KONT	6SE6400-4BD11-0AA0	Siemens
R1.95	200010916	ESIR4301	1	=ES+S/113.1	brake resistor	380-480 V PK 100W KONT	6SE6400-4BD11-0AA0	Siemens
R1.97	200010917	ESIR4304	1	=ES+S/114.1	brake resistor	380-480 V PK 200W KONT	6SE6400-4BD12-0BA0	Siemens
R1.99	200010916	ESIR4301	1	=ES+S/115.1	brake resistor	380-480 V PK 100W KONT	6SE6400-4BD11-0AA0	Siemens
R2.1	200010916	ESIR4301	1	=ES+S/119.1	brake resistor	380-480 V PK 100W KONT	6SE6400-4BD11-0AA0	Siemens

Parts list

electrical construction

Artilelstückliste_Elo_SAP_001

DT	Part number new	Part number old	Quantity	Placement	Designation 1	Designation 2	Order number	Manufacturer
R2.2	200010916	ESIR4301	1	=ES+S/120.1	brake resistor	380-480 V PK 100W KONT	6SE6400-4BD11-0AA0	Siemens
R2.3	200010916	ESIR4301	1	=ES+S/121.1	brake resistor	380-480 V PK 100W KONT	6SE6400-4BD11-0AA0	Siemens
R2.4	200010916	ESIR4301	1	=ES+S/122.1	brake resistor	380-480 V PK 100W KONT	6SE6400-4BD11-0AA0	Siemens
R2.5	200010916	ESIR4301	1	=ES+S/123.1	brake resistor	380-480 V PK 100W KONT	6SE6400-4BD11-0AA0	Siemens
R2.6	200010916	ESIR4301	1	=ES+S/125.1	brake resistor	380-480 V PK 100W KONT	6SE6400-4BD11-0AA0	Siemens
R2.7	200010916	ESIR4301	1	=ES+S/126.1	brake resistor	380-480 V PK 100W KONT	6SE6400-4BD11-0AA0	Siemens
R2.8	200010916	ESIR4301	1	=ES+S/127.1	brake resistor	380-480 V PK 100W KONT	6SE6400-4BD11-0AA0	Siemens
R2.9	200010916	ESIR4301	1	=ES+S/128.1	brake resistor	380-480 V PK 100W KONT	6SE6400-4BD11-0AA0	Siemens
R2.10	200010916	ESIR4301	1	=ES+S/129.1	brake resistor	380-480 V PK 100W KONT	6SE6400-4BD11-0AA0	Siemens
R2.11	200010916	ESIR4301	1	=ES+S/133.1	brake resistor	380-480 V PK 100W KONT	6SE6400-4BD11-0AA0	Siemens
R2.12	200010916	ESIR4301	1	=ES+S/134.1	brake resistor	380-480 V PK 100W KONT	6SE6400-4BD11-0AA0	Siemens
R2.13	200010916	ESIR4301	1	=ES+S/135.1	brake resistor	380-480 V PK 100W KONT	6SE6400-4BD11-0AA0	Siemens
R2.14	200010916	ESIR4301	1	=ES+S/136.1	brake resistor	380-480 V PK 100W KONT	6SE6400-4BD11-0AA0	Siemens
R2.15	200010916	ESIR4301	1	=ES+S/137.1	brake resistor	380-480 V PK 100W KONT	6SE6400-4BD11-0AA0	Siemens
R2.16	200010916	ESIR4301	1	=ES+S/138.1	brake resistor	380-480 V PK 100W KONT	6SE6400-4BD11-0AA0	Siemens
R2.17	200010916	ESIR4301	1	=ES+S/140.1	brake resistor	380-480 V PK 100W KONT	6SE6400-4BD11-0AA0	Siemens
R2.18	200010916	ESIR4301	1	=ES+S/141.1	brake resistor	380-480 V PK 100W KONT	6SE6400-4BD11-0AA0	Siemens
R2.19	200010916	ESIR4301	1	=ES+S/142.1	brake resistor	380-480 V PK 100W KONT	6SE6400-4BD11-0AA0	Siemens
R2.20	200010916	ESIR4301	1	=ES+S/143.1	brake resistor	380-480 V PK 100W KONT	6SE6400-4BD11-0AA0	Siemens
R2.21	200010916	ESIR4301	1	=ES+S/144.1	brake resistor	380-480 V PK 100W KONT	6SE6400-4BD11-0AA0	Siemens
R2.22	200010916	ESIR4301	1	=ES+S/145.1	brake resistor	380-480 V PK 100W KONT	6SE6400-4BD11-0AA0	Siemens
R2.23	200010916	ESIR4301	1	=ES+S/147.1	brake resistor	380-480 V PK 100W KONT	6SE6400-4BD11-0AA0	Siemens
R2.24	200010916	ESIR4301	1	=ES+S/148.1	brake resistor	380-480 V PK 100W KONT	6SE6400-4BD11-0AA0	Siemens
R2.25	200010916	ESIR4301	1	=ES+S/149.1	brake resistor	380-480 V PK 100W KONT	6SE6400-4BD11-0AA0	Siemens
R2.26	200010916	ESIR4301	1	=ES+S/150.1	brake resistor	380-480 V PK 100W KONT	6SE6400-4BD11-0AA0	Siemens
R2.27	200010916	ESIR4301	1	=ES+S/151.1	brake resistor	380-480 V PK 100W KONT	6SE6400-4BD11-0AA0	Siemens
R2.28	200010916	ESIR4301	1	=ES+S/152.1	brake resistor	380-480 V PK 100W KONT	6SE6400-4BD11-0AA0	Siemens
R2.29	200010916	ESIR4301	1	=ES+S/154.1	brake resistor	380-480 V PK 100W KONT	6SE6400-4BD11-0AA0	Siemens
R2.30	200010916	ESIR4301	1	=ES+S/155.1	brake resistor	380-480 V PK 100W KONT	6SE6400-4BD11-0AA0	Siemens
R2.31	200010916	ESIR4301	1	=ES+S/156.1	brake resistor	380-480 V PK 100W KONT	6SE6400-4BD11-0AA0	Siemens
R2.32	200010916	ESIR4301	1	=ES+S/157.1	brake resistor	380-480 V PK 100W KONT	6SE6400-4BD11-0AA0	Siemens
R2.33	200010916	ESIR4301	1	=ES+S/158.1	brake resistor	380-480 V PK 100W KONT	6SE6400-4BD11-0AA0	Siemens
R2.34	200010916	ESIR4301	1	=ES+S/159.1	brake resistor	380-480 V PK 100W KONT	6SE6400-4BD11-0AA0	Siemens
R2.35	200010916	ESIR4301	1	=ES+S/161.1	brake resistor	380-480 V PK 100W KONT	6SE6400-4BD11-0AA0	Siemens
R2.36	200010916	ESIR4301	1	=ES+S/162.1	brake resistor	380-480 V PK 100W KONT	6SE6400-4BD11-0AA0	Siemens
R2.37	200010916	ESIR4301	1	=ES+S/163.1	brake resistor	380-480 V PK 100W KONT	6SE6400-4BD11-0AA0	Siemens
R2.38	200010916	ESIR4301	1	=ES+S/164.1	brake resistor	380-480 V PK 100W KONT	6SE6400-4BD11-0AA0	Siemens
R2.39	200010916	ESIR4301	1	=ES+S/165.1	brake resistor	380-480 V PK 100W KONT	6SE6400-4BD11-0AA0	Siemens

Parts list

electrical construction

Artilelstückliste_Elo_SAP_001

DT	Part number new	Part number old	Quantity	Placement	Designation 1	Designation 2	Order number	Manufacturer
R2.40	200010916	ESIR4301	1	=ES+S/166.1	brake resistor	380-480 V PK 100W KONT	6SE6400-4BD11-0AA0	Siemens
R2.41	200010916	ESIR4301	1	=ES+S/168.1	brake resistor	380-480 V PK 100W KONT	6SE6400-4BD11-0AA0	Siemens
R2.42	200010916	ESIR4301	1	=ES+S/169.1	brake resistor	380-480 V PK 100W KONT	6SE6400-4BD11-0AA0	Siemens
R2.43	200010916	ESIR4301	1	=ES+S/170.1	brake resistor	380-480 V PK 100W KONT	6SE6400-4BD11-0AA0	Siemens
R2.44	200010916	ESIR4301	1	=ES+S/171.1	brake resistor	380-480 V PK 100W KONT	6SE6400-4BD11-0AA0	Siemens
R2.45	200010916	ESIR4301	1	=ES+S/172.1	brake resistor	380-480 V PK 100W KONT	6SE6400-4BD11-0AA0	Siemens
R2.46	200010916	ESIR4301	1	=ES+S/173.1	brake resistor	380-480 V PK 100W KONT	6SE6400-4BD11-0AA0	Siemens
R2.47	200010916	ESIR4301	1	=ES+S/175.1	brake resistor	380-480 V PK 100W KONT	6SE6400-4BD11-0AA0	Siemens
R2.48	200010916	ESIR4301	1	=ES+S/176.1	brake resistor	380-480 V PK 100W KONT	6SE6400-4BD11-0AA0	Siemens
R2.49	200010916	ESIR4301	1	=ES+S/177.1	brake resistor	380-480 V PK 100W KONT	6SE6400-4BD11-0AA0	Siemens
R2.50	200010916	ESIR4301	1	=ES+S/178.1	brake resistor	380-480 V PK 100W KONT	6SE6400-4BD11-0AA0	Siemens
R2.51	200010916	ESIR4301	1	=ES+S/179.1	brake resistor	380-480 V PK 100W KONT	6SE6400-4BD11-0AA0	Siemens
R2.52	200010916	ESIR4301	1	=ES+S/180.1	brake resistor	380-480 V PK 100W KONT	6SE6400-4BD11-0AA0	Siemens
R2.53	200010916	ESIR4301	1	=ES+S/182.1	brake resistor	380-480 V PK 100W KONT	6SE6400-4BD11-0AA0	Siemens
R2.54	200010916	ESIR4301	1	=ES+S/183.1	brake resistor	380-480 V PK 100W KONT	6SE6400-4BD11-0AA0	Siemens
R2.55	200010916	ESIR4301	1	=ES+S/184.1	brake resistor	380-480 V PK 100W KONT	6SE6400-4BD11-0AA0	Siemens
R2.56	200010916	ESIR4301	1	=ES+S/185.1	brake resistor	380-480 V PK 100W KONT	6SE6400-4BD11-0AA0	Siemens
R2.57	200010916	ESIR4301	1	=ES+S/186.1	brake resistor	380-480 V PK 100W KONT	6SE6400-4BD11-0AA0	Siemens
R2.58	200010916	ESIR4301	1	=ES+S/187.1	brake resistor	380-480 V PK 100W KONT	6SE6400-4BD11-0AA0	Siemens
R2.59	200010916	ESIR4301	1	=ES+S/189.1	brake resistor	380-480 V PK 100W KONT	6SE6400-4BD11-0AA0	Siemens
R2.60	200010916	ESIR4301	1	=ES+S/190.1	brake resistor	380-480 V PK 100W KONT	6SE6400-4BD11-0AA0	Siemens
R2.61	200010916	ESIR4301	1	=ES+S/191.1	brake resistor	380-480 V PK 100W KONT	6SE6400-4BD11-0AA0	Siemens
R2.62	200010916	ESIR4301	1	=ES+S/192.1	brake resistor	380-480 V PK 100W KONT	6SE6400-4BD11-0AA0	Siemens
R2.63	200010916	ESIR4301	1	=ES+S/193.1	brake resistor	380-480 V PK 100W KONT	6SE6400-4BD11-0AA0	Siemens
SE12.0	200011102	ESIS3504	1	=ES+S/295.1	key switch	RONIS SB 30 (1+0+2 abziebar)	3 SB 3000-4DD11	Siemens
SE12.0	200011050	ESIS3012	2	=ES+S/295.1	NO contact	Türeinbau	3 SB 3400-0B	Siemens
SE13.4	200011088	ESIS3202	1	=ES+S/296.5	selector switch	2 Stell. / rastend	3 SB 3000-2KA11	Siemens
SE13.4	200011050	ESIS3012	1	=ES+S/296.5	NO contact	Türeinbau	3 SB 3400-0B	Siemens
SE29.0	200011034	ESIS1005	1	=ES+S/308.1	coordinate switch	4 Stellungen	3 SB 1208-7JW01	Siemens
SE29.4	200011081	ESIS3155	1	=ES+S/308.5	illuminated pushbutton blue		3 SB 3001-0AA51	Siemens
SE29.4	200011053	ESIS3015	1	=ES+S/308.5	NO contact	Bodenbefestigung	3 SB 3420-0B	Siemens
SE29.5	200011081	ESIS3155	1	=ES+S/308.6	illuminated pushbutton blue		3 SB 3001-0AA51	Siemens
SE29.5	200011053	ESIS3015	1	=ES+S/308.6	NO contact	Bodenbefestigung	3 SB 3420-0B	Siemens
SE29.6	200011081	ESIS3155	1	=ES+S/308.7	illuminated pushbutton blue		3 SB 3001-0AA51	Siemens
SE29.6	200011053	ESIS3015	1	=ES+S/308.7	NO contact	Bodenbefestigung	3 SB 3420-0B	Siemens
SE29.7	200011081	ESIS3155	1	=ES+S/308.8	illuminated pushbutton blue		3 SB 3001-0AA51	Siemens
SE29.7	200011053	ESIS3015	1	=ES+S/308.8	NO contact	Bodenbefestigung	3 SB 3420-0B	Siemens
SN1	200011117	ESIS3901	1	=ES+S/264.0	mushroom pushbutton	40 mm / verrastend	3 SB 3000-1HA20	Siemens

Parts list

electrical construction

Artilelstückliste_Elo_SAP_001

DT	Part number new	Part number old	Quantity	Placement	Designation 1	Designation 2	Order number	Manufacturer
SN1	200011049	ESIS3011	2	=ES+S/264.0	NC contact	Türeinbau	3 SB 3400-0C	Siemens
SN2	200011117	ESIS3901	1	=ES+S/264.0	mushroom pushbutton	40 mm / verrastend	3 SB 3000-1HA20	Siemens
SN2	200011049	ESIS3011	2	=ES+S/264.0	NC contact	Türeinbau	3 SB 3400-0C	Siemens
SN2	200011116	ESIS3900	1	=ES+S/264.0	shroud yellow	für 3SB3	3 SB 3921-0AK	Siemens
SN7	200011117	ESIS3901	1	=ES+S/264.5	mushroom pushbutton	40 mm / verrastend	3 SB 3000-1HA20	Siemens
SN7	200011052	ESIS3014	2	=ES+S/264.5	NC contact	Bodenbefestigung	3 SB 3420-0C	Siemens
SN8	200011117	ESIS3901	1	=ES+S/264.5	mushroom pushbutton	40 mm / verrastend	3 SB 3000-1HA20	Siemens
SN8	200011052	ESIS3014	2	=ES+S/264.5	NC contact	Bodenbefestigung	3 SB 3420-0C	Siemens
SN9	200011117	ESIS3901	1	=ES+S/264.7	mushroom pushbutton	40 mm / verrastend	3 SB 3000-1HA20	Siemens
SN9	200011052	ESIS3014	2	=ES+S/264.7	NC contact	Bodenbefestigung	3 SB 3420-0C	Siemens
SN10	200011117	ESIS3901	1	=ES+S/264.7	mushroom pushbutton	40 mm / verrastend	3 SB 3000-1HA20	Siemens
SN10	200011052	ESIS3014	2	=ES+S/264.7	NC contact	Bodenbefestigung	3 SB 3420-0C	Siemens
SSE	200011071	ESIS3125	1	=ES+S/265.6	illuminated pushbutton green		3 SB 3001-0AA41	Siemens
SSE	200011050	ESIS3012	1	=ES+S/265.6	NO contact	Türeinbau	3 SB 3400-0B	Siemens
Schrank1	200009624	ERIA8206L	1	=AP+SA1/1.0	Enclosure	1200 x 2000 x 600	TS 8206.500	Rittal
Schrank1	200009543	ERIA8026	1	=AP+SA1/1.0	base side section	200 x 600	TS 8602.060	Rittal
Schrank1	200009626	ERIA8220	1	=AP+SA1/1.0	base ahead behind	1200 x 200	TS 8602.200	Rittal
Schrank1	200009607	ERIA8106L	1	=AP+SA1/1.0	side panel	2000 x 600 mm	TS 8106.235	Rittal
Schrank1	200009203	ERIA0027	1	=AP+SA1/1.0	Switch plan pocket	600 mm	PS 4116	Rittal
Schrank2	200009624	ERIA8206L	1	=AP+SA1/1.2	Enclosure	1200 x 2000 x 600	TS 8206.500	Rittal
Schrank2	200009543	ERIA8026	1	=AP+SA1/1.2	base side section	200 x 600	TS 8602.060	Rittal
Schrank2	200009626	ERIA8220	1	=AP+SA1/1.2	base ahead behind	1200 x 200	TS 8602.200	Rittal
Schrank2	200009547	ERIA8031	1	=AP+SA1/1.2	Mounting Angle		TS 8800.430	Rittal
Schrank2	200009550	ERIA8034	1	=AP+SA1/1.2	mounting accessories	Anreihzwinge	TS 8800.410	Rittal
Schrank3	200009624	ERIA8206L	1	=AP+SA1/1.4	Enclosure	1200 x 2000 x 600	TS 8206.500	Rittal
Schrank3	200009543	ERIA8026	1	=AP+SA1/1.4	base side section	200 x 600	TS 8602.060	Rittal
Schrank3	200009626	ERIA8220	1	=AP+SA1/1.4	base ahead behind	1200 x 200	TS 8602.200	Rittal
Schrank3	200009547	ERIA8031	1	=AP+SA1/1.4	Mounting Angle		TS 8800.430	Rittal
Schrank3	200009550	ERIA8034	1	=AP+SA1/1.4	mounting accessories	Anreihzwinge	TS 8800.410	Rittal
Schrank4	200009624	ERIA8206L	1	=AP+SA1/1.7	Enclosure	1200 x 2000 x 600	TS 8206.500	Rittal
Schrank4	200009543	ERIA8026	1	=AP+SA1/1.7	base side section	200 x 600	TS 8602.060	Rittal
Schrank4	200009626	ERIA8220	1	=AP+SA1/1.7	base ahead behind	1200 x 200	TS 8602.200	Rittal
Schrank4	200009547	ERIA8031	1	=AP+SA1/1.7	Mounting Angle		TS 8800.430	Rittal
Schrank4	200009550	ERIA8034	1	=AP+SA1/1.7	mounting accessories	Anreihzwinge	TS 8800.410	Rittal
Schrank4	200009553	ERIA8037	1	=AP+SA1/1.7	lifting lug	(VE=4 Stück)	TS 4540.000	Rittal
Schrank1	200009624	ERIA8206L	1	=AP+SA2/1.0	Enclosure	1200 x 2000 x 600	TS 8206.500	Rittal
Schrank1	200009543	ERIA8026	1	=AP+SA2/1.0	base side section	200 x 600	TS 8602.060	Rittal
Schrank1	200009626	ERIA8220	1	=AP+SA2/1.0	base ahead behind	1200 x 200	TS 8602.200	Rittal

Parts list

electrical construction

Artilelstückliste_Elo_SAP_001

DT	Part number new	Part number old	Quantity	Placement	Designation 1	Designation 2	Order number	Manufacturer
Schrank1	200009607	ERIA8106L	1	=AP+SA2/1.0	side panel	2000 x 600 mm	TS 8106.235	Rittal
Schrank2	200009624	ERIA8206L	1	=AP+SA2/1.3	Enclosure	1200 x 2000 x 600	TS 8206.500	Rittal
Schrank2	200009543	ERIA8026	1	=AP+SA2/1.3	base side section	200 x 600	TS 8602.060	Rittal
Schrank2	200009626	ERIA8220	1	=AP+SA2/1.3	base ahead behind	1200 x 200	TS 8602.200	Rittal
Schrank2	200009547	ERIA8031	1	=AP+SA2/1.3	Mounting Angle		TS 8800.430	Rittal
Schrank2	200009550	ERIA8034	1	=AP+SA2/1.3	mounting accessories	Anreihzwinge	TS 8800.410	Rittal
Schrank3	200009624	ERIA8206L	1	=AP+SA2/1.6	Enclosure	1200 x 2000 x 600	TS 8206.500	Rittal
Schrank3	200009543	ERIA8026	1	=AP+SA2/1.6	base side section	200 x 600	TS 8602.060	Rittal
Schrank3	200009626	ERIA8220	1	=AP+SA2/1.6	base ahead behind	1200 x 200	TS 8602.200	Rittal
Schrank3	200009547	ERIA8031	1	=AP+SA2/1.6	Mounting Angle		TS 8800.430	Rittal
Schrank3	200009550	ERIA8034	1	=AP+SA2/1.6	mounting accessories	Anreihzwinge	TS 8800.410	Rittal
Schrank3	200009553	ERIA8037	1	=AP+SA2/1.6	lifting lug	(VE=4 Stück)	TS 4540.000	Rittal
Schrank1	200009624	ERIA8206L	1	=AP+SA3/1.0	Enclosure	1200 x 2000 x 600	TS 8206.500	Rittal
Schrank1	200009543	ERIA8026	1	=AP+SA3/1.0	base side section	200 x 600	TS 8602.060	Rittal
Schrank1	200009626	ERIA8220	1	=AP+SA3/1.0	base ahead behind	1200 x 200	TS 8602.200	Rittal
Schrank1	200009607	ERIA8106L	1	=AP+SA3/1.0	side panel	2000 x 600 mm	TS 8106.235	Rittal
Schrank2	200009624	ERIA8206L	1	=AP+SA3/1.3	Enclosure	1200 x 2000 x 600	TS 8206.500	Rittal
Schrank2	200009543	ERIA8026	1	=AP+SA3/1.3	base side section	200 x 600	TS 8602.060	Rittal
Schrank2	200009626	ERIA8220	1	=AP+SA3/1.3	base ahead behind	1200 x 200	TS 8602.200	Rittal
Schrank2	200009547	ERIA8031	1	=AP+SA3/1.3	Mounting Angle		TS 8800.430	Rittal
Schrank2	200009550	ERIA8034	1	=AP+SA3/1.3	mounting accessories	Anreihzwinge	TS 8800.410	Rittal
Schrank3	200009624	ERIA8206L	1	=AP+SA3/1.6	Enclosure	1200 x 2000 x 600	TS 8206.500	Rittal
Schrank3	200009543	ERIA8026	1	=AP+SA3/1.6	base side section	200 x 600	TS 8602.060	Rittal
Schrank3	200009626	ERIA8220	1	=AP+SA3/1.6	base ahead behind	1200 x 200	TS 8602.200	Rittal
Schrank3	200009547	ERIA8031	1	=AP+SA3/1.6	Mounting Angle		TS 8800.430	Rittal
Schrank3	200009550	ERIA8034	1	=AP+SA3/1.6	mounting accessories	Anreihzwinge	TS 8800.410	Rittal
Schrank3	200009553	ERIA8037	1	=AP+SA3/1.6	lifting lug	(VE=4 Stück)	TS 4540.000	Rittal
Schrank1	200009624	ERIA8206L	1	=AP+SA4/1.0	Enclosure	1200 x 2000 x 600	TS 8206.500	Rittal
Schrank1	200009543	ERIA8026	1	=AP+SA4/1.0	base side section	200 x 600	TS 8602.060	Rittal
Schrank1	200009626	ERIA8220	1	=AP+SA4/1.0	base ahead behind	1200 x 200	TS 8602.200	Rittal
Schrank1	200009607	ERIA8106L	1	=AP+SA4/1.0	side panel	2000 x 600 mm	TS 8106.235	Rittal
Schrank2	200009624	ERIA8206L	1	=AP+SA4/1.3	Enclosure	1200 x 2000 x 600	TS 8206.500	Rittal
Schrank2	200009543	ERIA8026	1	=AP+SA4/1.3	base side section	200 x 600	TS 8602.060	Rittal
Schrank2	200009626	ERIA8220	1	=AP+SA4/1.3	base ahead behind	1200 x 200	TS 8602.200	Rittal
Schrank2	200009547	ERIA8031	1	=AP+SA4/1.3	Mounting Angle		TS 8800.430	Rittal
Schrank2	200009550	ERIA8034	1	=AP+SA4/1.3	mounting accessories	Anreihzwinge	TS 8800.410	Rittal
Schrank3	200009624	ERIA8206L	1	=AP+SA4/1.6	Enclosure	1200 x 2000 x 600	TS 8206.500	Rittal
Schrank3	200009543	ERIA8026	1	=AP+SA4/1.6	base side section	200 x 600	TS 8602.060	Rittal

Parts list

electrical construction

Artilelstückliste_Elo_SAP_001

DT	Part number new	Part number old	Quantity	Placement	Designation 1	Designation 2	Order number	Manufacturer
Schrank3	200009626	ERIA8220	1	=AP+SA4/1.6	base ahead behind	1200 x 200	TS 8602.200	Rittal
Schrank3	200009547	ERIA8031	1	=AP+SA4/1.6	Mounting Angle		TS 8800.430	Rittal
Schrank3	200009550	ERIA8034	1	=AP+SA4/1.6	mounting accessories	Anreihzwinge	TS 8800.410	Rittal
Schrank3	200009553	ERIA8037	1	=AP+SA4/1.6	lifting lug	(VE=4 Stück)	TS 4540.000	Rittal
T1.1	200030071	ESIA4302-N	1	=ES+S/3.0	frequency converter	MM440 380-480V / 2,2 KW	6SE 6440-2UD22-2BA1	Siemens
T1.1	200010198	ESIA2400	1	=ES+S/3.0	operater panel	BOP für Micromaster 4	6SE6400-0BP00-0AA0	Siemens
T1.1	200010268	ESIA4392	1	=ES+S/3.0	profibus module	für Micromaster 440	6SE6400-1PB00-0AA0	Siemens
T1.1	200010269	ESIA4393	1	=ES+S/3.4	Pulse generator report	für Micromaster 4	6SE6400-0EN00-0AA0	Siemens
T1.1	200010333	ESIA7047	1	=ES+S/3.0	Profibus plug	gerade / Schneidklemmen	6GK 1500-0FC00	Siemens
T1.1	200011393	ESIZ2401	1	=ES+S/3.0	Screen connection record	MICRO MASTER 420	6SE6400-0GP00-0BA0	Siemens
T1.2	200030071	ESIA4302-N	1	=ES+S/4.0	frequency converter	MM440 380-480V / 2,2 KW	6SE 6440-2UD22-2BA1	Siemens
T1.2	200010198	ESIA2400	1	=ES+S/4.0	operater panel	BOP für Micromaster 4	6SE6400-0BP00-0AA0	Siemens
T1.2	200010268	ESIA4392	1	=ES+S/4.0	profibus module	für Micromaster 440	6SE6400-1PB00-0AA0	Siemens
T1.2	200010269	ESIA4393	1	=ES+S/4.4	Pulse generator report	für Micromaster 4	6SE6400-0EN00-0AA0	Siemens
T1.2	200010333	ESIA7047	1	=ES+S/4.0	Profibus plug	gerade / Schneidklemmen	6GK 1500-0FC00	Siemens
T1.2	200011393	ESIZ2401	1	=ES+S/4.0	Screen connection record	MICRO MASTER 420	6SE6400-0GP00-0BA0	Siemens
T1.3	200030071	ESIA4302-N	1	=ES+S/5.0	frequency converter	MM440 380-480V / 2,2 KW	6SE 6440-2UD22-2BA1	Siemens
T1.3	200010198	ESIA2400	1	=ES+S/5.0	operater panel	BOP für Micromaster 4	6SE6400-0BP00-0AA0	Siemens
T1.3	200010268	ESIA4392	1	=ES+S/5.0	profibus module	für Micromaster 440	6SE6400-1PB00-0AA0	Siemens
T1.3	200010269	ESIA4393	1	=ES+S/5.4	Pulse generator report	für Micromaster 4	6SE6400-0EN00-0AA0	Siemens
T1.3	200010333	ESIA7047	1	=ES+S/5.0	Profibus plug	gerade / Schneidklemmen	6GK 1500-0FC00	Siemens
T1.3	200011393	ESIZ2401	1	=ES+S/5.0	Screen connection record	MICRO MASTER 420	6SE6400-0GP00-0BA0	Siemens
T1.4	200030071	ESIA4302-N	1	=ES+S/6.0	frequency converter	MM440 380-480V / 2,2 KW	6SE 6440-2UD22-2BA1	Siemens
T1.4	200010198	ESIA2400	1	=ES+S/6.0	operater panel	BOP für Micromaster 4	6SE6400-0BP00-0AA0	Siemens
T1.4	200010268	ESIA4392	1	=ES+S/6.0	profibus module	für Micromaster 440	6SE6400-1PB00-0AA0	Siemens
T1.4	200010269	ESIA4393	1	=ES+S/6.4	Pulse generator report	für Micromaster 4	6SE6400-0EN00-0AA0	Siemens
T1.4	200010333	ESIA7047	1	=ES+S/6.0	Profibus plug	gerade / Schneidklemmen	6GK 1500-0FC00	Siemens
T1.4	200011393	ESIZ2401	1	=ES+S/6.0	Screen connection record	MICRO MASTER 420	6SE6400-0GP00-0BA0	Siemens
T1.5	200030071	ESIA4302-N	1	=ES+S/7.0	frequency converter	MM440 380-480V / 2,2 KW	6SE 6440-2UD22-2BA1	Siemens
T1.5	200010198	ESIA2400	1	=ES+S/7.0	operater panel	BOP für Micromaster 4	6SE6400-0BP00-0AA0	Siemens
T1.5	200010268	ESIA4392	1	=ES+S/7.0	profibus module	für Micromaster 440	6SE6400-1PB00-0AA0	Siemens
T1.5	200010269	ESIA4393	1	=ES+S/7.4	Pulse generator report	für Micromaster 4	6SE6400-0EN00-0AA0	Siemens
T1.5	200010333	ESIA7047	1	=ES+S/7.0	Profibus plug	gerade / Schneidklemmen	6GK 1500-0FC00	Siemens
T1.5	200011393	ESIZ2401	1	=ES+S/7.0	Screen connection record	MICRO MASTER 420	6SE6400-0GP00-0BA0	Siemens
T1.6	200030071	ESIA4302-N	1	=ES+S/8.0	frequency converter	MM440 380-480V / 2,2 KW	6SE 6440-2UD22-2BA1	Siemens
T1.6	200010198	ESIA2400	1	=ES+S/8.0	operater panel	BOP für Micromaster 4	6SE6400-0BP00-0AA0	Siemens
T1.6	200010268	ESIA4392	1	=ES+S/8.0	profibus module	für Micromaster 440	6SE6400-1PB00-0AA0	Siemens
T1.6	200010269	ESIA4393	1	=ES+S/8.4	Pulse generator report	für Micromaster 4	6SE6400-0EN00-0AA0	Siemens

Parts list

electrical construction

Artilelstückliste_Elo_SAP_001

DT	Part number new	Part number old	Quantity	Placement	Designation 1	Designation 2	Order number	Manufacturer
T1.6	200010333	ESIA7047	1	=ES+S/8.0	Profibus plug	gerade / Schneidklemmen	6GK 1500-0FC00	Siemens
T1.6	200011393	ESIZ2401	1	=ES+S/8.0	Screen connection record	MICRO MASTER 420	6SE6400-0GP00-0BA0	Siemens
T1.7	200030071	ESIA4302-N	1	=ES+S/10.0	frequency converter	MM440 380-480V / 2,2 KW	6SE 6440-2UD22-2BA1	Siemens
T1.7	200010198	ESIA2400	1	=ES+S/10.0	operater panel	BOP für Micromaster 4	6SE6400-0BP00-0AA0	Siemens
T1.7	200010268	ESIA4392	1	=ES+S/10.0	profibus module	für Micromaster 440	6SE6400-1PB00-0AA0	Siemens
T1.7	200010269	ESIA4393	1	=ES+S/10.4	Pulse generator report	für Micromaster 4	6SE6400-0EN00-0AA0	Siemens
T1.7	200010333	ESIA7047	1	=ES+S/10.0	Profibus plug	gerade / Schneidklemmen	6GK 1500-0FC00	Siemens
T1.7	200011393	ESIZ2401	1	=ES+S/10.0	Screen connection record	MICRO MASTER 420	6SE6400-0GP00-0BA0	Siemens
T1.8	200030071	ESIA4302-N	1	=ES+S/11.0	frequency converter	MM440 380-480V / 2,2 KW	6SE 6440-2UD22-2BA1	Siemens
T1.8	200010198	ESIA2400	1	=ES+S/11.0	operater panel	BOP für Micromaster 4	6SE6400-0BP00-0AA0	Siemens
T1.8	200010268	ESIA4392	1	=ES+S/11.0	profibus module	für Micromaster 440	6SE6400-1PB00-0AA0	Siemens
T1.8	200010269	ESIA4393	1	=ES+S/11.4	Pulse generator report	für Micromaster 4	6SE6400-0EN00-0AA0	Siemens
T1.8	200010333	ESIA7047	1	=ES+S/11.0	Profibus plug	gerade / Schneidklemmen	6GK 1500-0FC00	Siemens
T1.8	200011393	ESIZ2401	1	=ES+S/11.0	Screen connection record	MICRO MASTER 420	6SE6400-0GP00-0BA0	Siemens
T1.9	200030071	ESIA4302-N	1	=ES+S/12.0	frequency converter	MM440 380-480V / 2,2 KW	6SE 6440-2UD22-2BA1	Siemens
T1.9	200010198	ESIA2400	1	=ES+S/12.0	operater panel	BOP für Micromaster 4	6SE6400-0BP00-0AA0	Siemens
T1.9	200010268	ESIA4392	1	=ES+S/12.0	profibus module	für Micromaster 440	6SE6400-1PB00-0AA0	Siemens
T1.9	200010269	ESIA4393	1	=ES+S/12.4	Pulse generator report	für Micromaster 4	6SE6400-0EN00-0AA0	Siemens
T1.9	200010333	ESIA7047	1	=ES+S/12.0	Profibus plug	gerade / Schneidklemmen	6GK 1500-0FC00	Siemens
T1.9	200011393	ESIZ2401	1	=ES+S/12.0	Screen connection record	MICRO MASTER 420	6SE6400-0GP00-0BA0	Siemens
T1.10	200030071	ESIA4302-N	1	=ES+S/13.0	frequency converter	MM440 380-480V / 2,2 KW	6SE 6440-2UD22-2BA1	Siemens
T1.10	200010198	ESIA2400	1	=ES+S/13.0	operater panel	BOP für Micromaster 4	6SE6400-0BP00-0AA0	Siemens
T1.10	200010268	ESIA4392	1	=ES+S/13.0	profibus module	für Micromaster 440	6SE6400-1PB00-0AA0	Siemens
T1.10	200010269	ESIA4393	1	=ES+S/13.4	Pulse generator report	für Micromaster 4	6SE6400-0EN00-0AA0	Siemens
T1.10	200010333	ESIA7047	1	=ES+S/13.0	Profibus plug	gerade / Schneidklemmen	6GK 1500-0FC00	Siemens
T1.10	200011393	ESIZ2401	1	=ES+S/13.0	Screen connection record	MICRO MASTER 420	6SE6400-0GP00-0BA0	Siemens
T1.11	200030071	ESIA4302-N	1	=ES+S/14.0	frequency converter	MM440 380-480V / 2,2 KW	6SE 6440-2UD22-2BA1	Siemens
T1.11	200010198	ESIA2400	1	=ES+S/14.0	operater panel	BOP für Micromaster 4	6SE6400-0BP00-0AA0	Siemens
T1.11	200010268	ESIA4392	1	=ES+S/14.0	profibus module	für Micromaster 440	6SE6400-1PB00-0AA0	Siemens
T1.11	200010269	ESIA4393	1	=ES+S/14.4	Pulse generator report	für Micromaster 4	6SE6400-0EN00-0AA0	Siemens
T1.11	200010333	ESIA7047	1	=ES+S/14.0	Profibus plug	gerade / Schneidklemmen	6GK 1500-0FC00	Siemens
T1.11	200011393	ESIZ2401	1	=ES+S/14.0	Screen connection record	MICRO MASTER 420	6SE6400-0GP00-0BA0	Siemens
T1.12	200030071	ESIA4302-N	1	=ES+S/15.0	frequency converter	MM440 380-480V / 2,2 KW	6SE 6440-2UD22-2BA1	Siemens
T1.12	200010198	ESIA2400	1	=ES+S/15.0	operater panel	BOP für Micromaster 4	6SE6400-0BP00-0AA0	Siemens
T1.12	200010268	ESIA4392	1	=ES+S/15.0	profibus module	für Micromaster 440	6SE6400-1PB00-0AA0	Siemens
T1.12	200010269	ESIA4393	1	=ES+S/15.4	Pulse generator report	für Micromaster 4	6SE6400-0EN00-0AA0	Siemens
T1.12	200010333	ESIA7047	1	=ES+S/15.0	Profibus plug	gerade / Schneidklemmen	6GK 1500-0FC00	Siemens
T1.12	200011393	ESIZ2401	1	=ES+S/15.0	Screen connection record	MICRO MASTER 420	6SE6400-0GP00-0BA0	Siemens

Parts list

electrical construction

Artilelstückliste_Elo_SAP_001

DT	Part number new	Part number old	Quantity	Placement	Designation 1	Designation 2	Order number	Manufacturer
T1.13	200030071	ESIA4302-N	1	=ES+S/17.0	frequency converter	MM440 380-480V / 2,2 KW	6SE 6440-2UD22-2BA1	Siemens
T1.13	200010198	ESIA2400	1	=ES+S/17.0	operater panel	BOP für Micromaster 4	6SE6400-0BP00-0AA0	Siemens
T1.13	200010268	ESIA4392	1	=ES+S/17.0	profibus module	für Micromaster 440	6SE6400-1PB00-0AA0	Siemens
T1.13	200010269	ESIA4393	1	=ES+S/17.4	Pulse generator report	für Micromaster 4	6SE6400-0EN00-0AA0	Siemens
T1.13	200010333	ESIA7047	1	=ES+S/17.0	Profibus plug	gerade / Schneidklemmen	6GK 1500-0FC00	Siemens
T1.13	200011393	ESIZ2401	1	=ES+S/17.0	Screen connection record	MICRO MASTER 420	6SE6400-0GP00-0BA0	Siemens
T1.14	200030071	ESIA4302-N	1	=ES+S/18.0	frequency converter	MM440 380-480V / 2,2 KW	6SE 6440-2UD22-2BA1	Siemens
T1.14	200010198	ESIA2400	1	=ES+S/18.0	operater panel	BOP für Micromaster 4	6SE6400-0BP00-0AA0	Siemens
T1.14	200010268	ESIA4392	1	=ES+S/18.0	profibus module	für Micromaster 440	6SE6400-1PB00-0AA0	Siemens
T1.14	200010269	ESIA4393	1	=ES+S/18.4	Pulse generator report	für Micromaster 4	6SE6400-0EN00-0AA0	Siemens
T1.14	200010333	ESIA7047	1	=ES+S/18.0	Profibus plug	gerade / Schneidklemmen	6GK 1500-0FC00	Siemens
T1.14	200011393	ESIZ2401	1	=ES+S/18.0	Screen connection record	MICRO MASTER 420	6SE6400-0GP00-0BA0	Siemens
T1.15	200030071	ESIA4302-N	1	=ES+S/19.0	frequency converter	MM440 380-480V / 2,2 KW	6SE 6440-2UD22-2BA1	Siemens
T1.15	200010198	ESIA2400	1	=ES+S/19.0	operater panel	BOP für Micromaster 4	6SE6400-0BP00-0AA0	Siemens
T1.15	200010268	ESIA4392	1	=ES+S/19.0	profibus module	für Micromaster 440	6SE6400-1PB00-0AA0	Siemens
T1.15	200010269	ESIA4393	1	=ES+S/19.4	Pulse generator report	für Micromaster 4	6SE6400-0EN00-0AA0	Siemens
T1.15	200010333	ESIA7047	1	=ES+S/19.0	Profibus plug	gerade / Schneidklemmen	6GK 1500-0FC00	Siemens
T1.15	200011393	ESIZ2401	1	=ES+S/19.0	Screen connection record	MICRO MASTER 420	6SE6400-0GP00-0BA0	Siemens
T1.16	200030071	ESIA4302-N	1	=ES+S/20.0	frequency converter	MM440 380-480V / 2,2 KW	6SE 6440-2UD22-2BA1	Siemens
T1.16	200010198	ESIA2400	1	=ES+S/20.0	operater panel	BOP für Micromaster 4	6SE6400-0BP00-0AA0	Siemens
T1.16	200010268	ESIA4392	1	=ES+S/20.0	profibus module	für Micromaster 440	6SE6400-1PB00-0AA0	Siemens
T1.16	200010269	ESIA4393	1	=ES+S/20.4	Pulse generator report	für Micromaster 4	6SE6400-0EN00-0AA0	Siemens
T1.16	200010333	ESIA7047	1	=ES+S/20.0	Profibus plug	gerade / Schneidklemmen	6GK 1500-0FC00	Siemens
T1.16	200011393	ESIZ2401	1	=ES+S/20.0	Screen connection record	MICRO MASTER 420	6SE6400-0GP00-0BA0	Siemens
T1.17	200030071	ESIA4302-N	1	=ES+S/21.0	frequency converter	MM440 380-480V / 2,2 KW	6SE 6440-2UD22-2BA1	Siemens
T1.17	200010198	ESIA2400	1	=ES+S/21.0	operater panel	BOP für Micromaster 4	6SE6400-0BP00-0AA0	Siemens
T1.17	200010268	ESIA4392	1	=ES+S/21.0	profibus module	für Micromaster 440	6SE6400-1PB00-0AA0	Siemens
T1.17	200010269	ESIA4393	1	=ES+S/21.4	Pulse generator report	für Micromaster 4	6SE6400-0EN00-0AA0	Siemens
T1.17	200010333	ESIA7047	1	=ES+S/21.0	Profibus plug	gerade / Schneidklemmen	6GK 1500-0FC00	Siemens
T1.17	200011393	ESIZ2401	1	=ES+S/21.0	Screen connection record	MICRO MASTER 420	6SE6400-0GP00-0BA0	Siemens
T1.18	200030071	ESIA4302-N	1	=ES+S/22.0	frequency converter	MM440 380-480V / 2,2 KW	6SE 6440-2UD22-2BA1	Siemens
T1.18	200010198	ESIA2400	1	=ES+S/22.0	operater panel	BOP für Micromaster 4	6SE6400-0BP00-0AA0	Siemens
T1.18	200010268	ESIA4392	1	=ES+S/22.0	profibus module	für Micromaster 440	6SE6400-1PB00-0AA0	Siemens
T1.18	200010269	ESIA4393	1	=ES+S/22.4	Pulse generator report	für Micromaster 4	6SE6400-0EN00-0AA0	Siemens
T1.18	200010333	ESIA7047	1	=ES+S/22.0	Profibus plug	gerade / Schneidklemmen	6GK 1500-0FC00	Siemens
T1.18	200011393	ESIZ2401	1	=ES+S/22.0	Screen connection record	MICRO MASTER 420	6SE6400-0GP00-0BA0	Siemens
T1.19	200030071	ESIA4302-N	1	=ES+S/24.0	frequency converter	MM440 380-480V / 2,2 KW	6SE 6440-2UD22-2BA1	Siemens
T1.19	200010198	ESIA2400	1	=ES+S/24.0	operater panel	BOP für Micromaster 4	6SE6400-0BP00-0AA0	Siemens

Parts list

electrical construction

Artilelstückliste_Elo_SAP_001

DT	Part number new	Part number old	Quantity	Placement	Designation 1	Designation 2	Order number	Manufacturer
T1.19	200010268	ESIA4392	1	=ES+S/24.0	profibus module	für Micromaster 440	6SE6400-1PB00-0AA0	Siemens
T1.19	200010269	ESIA4393	1	=ES+S/24.4	Pulse generator report	für Micromaster 4	6SE6400-0EN00-0AA0	Siemens
T1.19	200010333	ESIA7047	1	=ES+S/24.0	Profibus plug	gerade / Schneidklemmen	6GK 1500-0FC00	Siemens
T1.19	200011393	ESIZ2401	1	=ES+S/24.0	Screen connection record	MICRO MASTER 420	6SE6400-0GP00-0BA0	Siemens
T1.20	200030071	ESIA4302-N	1	=ES+S/25.0	frequency converter	MM440 380-480V / 2,2 KW	6SE 6440-2UD22-2BA1	Siemens
T1.20	200010198	ESIA2400	1	=ES+S/25.0	operater panel	BOP für Micromaster 4	6SE6400-0BP00-0AA0	Siemens
T1.20	200010268	ESIA4392	1	=ES+S/25.0	profibus module	für Micromaster 440	6SE6400-1PB00-0AA0	Siemens
T1.20	200010269	ESIA4393	1	=ES+S/25.4	Pulse generator report	für Micromaster 4	6SE6400-0EN00-0AA0	Siemens
T1.20	200010333	ESIA7047	1	=ES+S/25.0	Profibus plug	gerade / Schneidklemmen	6GK 1500-0FC00	Siemens
T1.20	200011393	ESIZ2401	1	=ES+S/25.0	Screen connection record	MICRO MASTER 420	6SE6400-0GP00-0BA0	Siemens
T1.21	200030071	ESIA4302-N	1	=ES+S/26.0	frequency converter	MM440 380-480V / 2,2 KW	6SE 6440-2UD22-2BA1	Siemens
T1.21	200010198	ESIA2400	1	=ES+S/26.0	operater panel	BOP für Micromaster 4	6SE6400-0BP00-0AA0	Siemens
T1.21	200010268	ESIA4392	1	=ES+S/26.0	profibus module	für Micromaster 440	6SE6400-1PB00-0AA0	Siemens
T1.21	200010269	ESIA4393	1	=ES+S/26.4	Pulse generator report	für Micromaster 4	6SE6400-0EN00-0AA0	Siemens
T1.21	200010333	ESIA7047	1	=ES+S/26.0	Profibus plug	gerade / Schneidklemmen	6GK 1500-0FC00	Siemens
T1.21	200011393	ESIZ2401	1	=ES+S/26.0	Screen connection record	MICRO MASTER 420	6SE6400-0GP00-0BA0	Siemens
T1.22	200030071	ESIA4302-N	1	=ES+S/27.0	frequency converter	MM440 380-480V / 2,2 KW	6SE 6440-2UD22-2BA1	Siemens
T1.22	200010198	ESIA2400	1	=ES+S/27.0	operater panel	BOP für Micromaster 4	6SE6400-0BP00-0AA0	Siemens
T1.22	200010268	ESIA4392	1	=ES+S/27.0	profibus module	für Micromaster 440	6SE6400-1PB00-0AA0	Siemens
T1.22	200010269	ESIA4393	1	=ES+S/27.4	Pulse generator report	für Micromaster 4	6SE6400-0EN00-0AA0	Siemens
T1.22	200010333	ESIA7047	1	=ES+S/27.0	Profibus plug	gerade / Schneidklemmen	6GK 1500-0FC00	Siemens
T1.22	200011393	ESIZ2401	1	=ES+S/27.0	Screen connection record	MICRO MASTER 420	6SE6400-0GP00-0BA0	Siemens
T1.23	200030071	ESIA4302-N	1	=ES+S/28.0	frequency converter	MM440 380-480V / 2,2 KW	6SE 6440-2UD22-2BA1	Siemens
T1.23	200010198	ESIA2400	1	=ES+S/28.0	operater panel	BOP für Micromaster 4	6SE6400-0BP00-0AA0	Siemens
T1.23	200010268	ESIA4392	1	=ES+S/28.0	profibus module	für Micromaster 440	6SE6400-1PB00-0AA0	Siemens
T1.23	200010269	ESIA4393	1	=ES+S/28.4	Pulse generator report	für Micromaster 4	6SE6400-0EN00-0AA0	Siemens
T1.23	200010333	ESIA7047	1	=ES+S/28.0	Profibus plug	gerade / Schneidklemmen	6GK 1500-0FC00	Siemens
T1.23	200011393	ESIZ2401	1	=ES+S/28.0	Screen connection record	MICRO MASTER 420	6SE6400-0GP00-0BA0	Siemens
T1.24	200030071	ESIA4302-N	1	=ES+S/29.0	frequency converter	MM440 380-480V / 2,2 KW	6SE 6440-2UD22-2BA1	Siemens
T1.24	200010198	ESIA2400	1	=ES+S/29.0	operater panel	BOP für Micromaster 4	6SE6400-0BP00-0AA0	Siemens
T1.24	200010268	ESIA4392	1	=ES+S/29.0	profibus module	für Micromaster 440	6SE6400-1PB00-0AA0	Siemens
T1.24	200010269	ESIA4393	1	=ES+S/29.4	Pulse generator report	für Micromaster 4	6SE6400-0EN00-0AA0	Siemens
T1.24	200010333	ESIA7047	1	=ES+S/29.0	Profibus plug	gerade / Schneidklemmen	6GK 1500-0FC00	Siemens
T1.24	200011393	ESIZ2401	1	=ES+S/29.0	Screen connection record	MICRO MASTER 420	6SE6400-0GP00-0BA0	Siemens
T1.25	200030071	ESIA4302-N	1	=ES+S/31.0	frequency converter	MM440 380-480V / 2,2 KW	6SE 6440-2UD22-2BA1	Siemens
T1.25	200010198	ESIA2400	1	=ES+S/31.0	operater panel	BOP für Micromaster 4	6SE6400-0BP00-0AA0	Siemens
T1.25	200010268	ESIA4392	1	=ES+S/31.0	profibus module	für Micromaster 440	6SE6400-1PB00-0AA0	Siemens
T1.25	200010269	ESIA4393	1	=ES+S/31.4	Pulse generator report	für Micromaster 4	6SE6400-0EN00-0AA0	Siemens

Parts list

electrical construction

Artilelstückliste_Elo_SAP_001

DT	Part number new	Part number old	Quantity	Placement	Designation 1	Designation 2	Order number	Manufacturer
T1.25	200010333	ESIA7047	1	=ES+S/31.0	Profibus plug	gerade / Schneidklemmen	6GK 1500-0FC00	Siemens
T1.25	200011393	ESIZ2401	1	=ES+S/31.0	Screen connection record	MICRO MASTER 420	6SE6400-0GP00-0BA0	Siemens
T1.26	200030071	ESIA4302-N	1	=ES+S/32.0	frequency converter	MM440 380-480V / 2,2 KW	6SE 6440-2UD22-2BA1	Siemens
T1.26	200010198	ESIA2400	1	=ES+S/32.0	operater panel	BOP für Micromaster 4	6SE6400-0BP00-0AA0	Siemens
T1.26	200010268	ESIA4392	1	=ES+S/32.0	profibus module	für Micromaster 440	6SE6400-1PB00-0AA0	Siemens
T1.26	200010269	ESIA4393	1	=ES+S/32.4	Pulse generator report	für Micromaster 4	6SE6400-0EN00-0AA0	Siemens
T1.26	200010333	ESIA7047	1	=ES+S/32.0	Profibus plug	gerade / Schneidklemmen	6GK 1500-0FC00	Siemens
T1.26	200011393	ESIZ2401	1	=ES+S/32.0	Screen connection record	MICRO MASTER 420	6SE6400-0GP00-0BA0	Siemens
T1.27	200030071	ESIA4302-N	1	=ES+S/33.0	frequency converter	MM440 380-480V / 2,2 KW	6SE 6440-2UD22-2BA1	Siemens
T1.27	200010198	ESIA2400	1	=ES+S/33.0	operater panel	BOP für Micromaster 4	6SE6400-0BP00-0AA0	Siemens
T1.27	200010268	ESIA4392	1	=ES+S/33.0	profibus module	für Micromaster 440	6SE6400-1PB00-0AA0	Siemens
T1.27	200010269	ESIA4393	1	=ES+S/33.4	Pulse generator report	für Micromaster 4	6SE6400-0EN00-0AA0	Siemens
T1.27	200010333	ESIA7047	1	=ES+S/33.0	Profibus plug	gerade / Schneidklemmen	6GK 1500-0FC00	Siemens
T1.27	200011393	ESIZ2401	1	=ES+S/33.0	Screen connection record	MICRO MASTER 420	6SE6400-0GP00-0BA0	Siemens
T1.28	200030071	ESIA4302-N	1	=ES+S/34.0	frequency converter	MM440 380-480V / 2,2 KW	6SE 6440-2UD22-2BA1	Siemens
T1.28	200010198	ESIA2400	1	=ES+S/34.0	operater panel	BOP für Micromaster 4	6SE6400-0BP00-0AA0	Siemens
T1.28	200010268	ESIA4392	1	=ES+S/34.0	profibus module	für Micromaster 440	6SE6400-1PB00-0AA0	Siemens
T1.28	200010269	ESIA4393	1	=ES+S/34.4	Pulse generator report	für Micromaster 4	6SE6400-0EN00-0AA0	Siemens
T1.28	200010333	ESIA7047	1	=ES+S/34.0	Profibus plug	gerade / Schneidklemmen	6GK 1500-0FC00	Siemens
T1.28	200011393	ESIZ2401	1	=ES+S/34.0	Screen connection record	MICRO MASTER 420	6SE6400-0GP00-0BA0	Siemens
T1.29	200030071	ESIA4302-N	1	=ES+S/35.0	frequency converter	MM440 380-480V / 2,2 KW	6SE 6440-2UD22-2BA1	Siemens
T1.29	200010198	ESIA2400	1	=ES+S/35.0	operater panel	BOP für Micromaster 4	6SE6400-0BP00-0AA0	Siemens
T1.29	200010268	ESIA4392	1	=ES+S/35.0	profibus module	für Micromaster 440	6SE6400-1PB00-0AA0	Siemens
T1.29	200010269	ESIA4393	1	=ES+S/35.4	Pulse generator report	für Micromaster 4	6SE6400-0EN00-0AA0	Siemens
T1.29	200010333	ESIA7047	1	=ES+S/35.0	Profibus plug	gerade / Schneidklemmen	6GK 1500-0FC00	Siemens
T1.29	200011393	ESIZ2401	1	=ES+S/35.0	Screen connection record	MICRO MASTER 420	6SE6400-0GP00-0BA0	Siemens
T1.30	200030071	ESIA4302-N	1	=ES+S/36.0	frequency converter	MM440 380-480V / 2,2 KW	6SE 6440-2UD22-2BA1	Siemens
T1.30	200010198	ESIA2400	1	=ES+S/36.0	operater panel	BOP für Micromaster 4	6SE6400-0BP00-0AA0	Siemens
T1.30	200010268	ESIA4392	1	=ES+S/36.0	profibus module	für Micromaster 440	6SE6400-1PB00-0AA0	Siemens
T1.30	200010269	ESIA4393	1	=ES+S/36.4	Pulse generator report	für Micromaster 4	6SE6400-0EN00-0AA0	Siemens
T1.30	200010333	ESIA7047	1	=ES+S/36.0	Profibus plug	gerade / Schneidklemmen	6GK 1500-0FC00	Siemens
T1.30	200011393	ESIZ2401	1	=ES+S/36.0	Screen connection record	MICRO MASTER 420	6SE6400-0GP00-0BA0	Siemens
T1.31	200030071	ESIA4302-N	1	=ES+S/38.0	frequency converter	MM440 380-480V / 2,2 KW	6SE 6440-2UD22-2BA1	Siemens
T1.31	200010198	ESIA2400	1	=ES+S/38.0	operater panel	BOP für Micromaster 4	6SE6400-0BP00-0AA0	Siemens
T1.31	200010268	ESIA4392	1	=ES+S/38.0	profibus module	für Micromaster 440	6SE6400-1PB00-0AA0	Siemens
T1.31	200010269	ESIA4393	1	=ES+S/38.4	Pulse generator report	für Micromaster 4	6SE6400-0EN00-0AA0	Siemens
T1.31	200010333	ESIA7047	1	=ES+S/38.0	Profibus plug	gerade / Schneidklemmen	6GK 1500-0FC00	Siemens
T1.31	200011393	ESIZ2401	1	=ES+S/38.0	Screen connection record	MICRO MASTER 420	6SE6400-0GP00-0BA0	Siemens

Parts list

electrical construction

Artilelstückliste_Elo_SAP_001

DT	Part number new	Part number old	Quantity	Placement	Designation 1	Designation 2	Order number	Manufacturer
T1.32	200030071	ESIA4302-N	1	=ES+S/39.0	frequency converter	MM440 380-480V / 2,2 KW	6SE 6440-2UD22-2BA1	Siemens
T1.32	200010198	ESIA2400	1	=ES+S/39.0	operater panel	BOP für Micromaster 4	6SE6400-0BP00-0AA0	Siemens
T1.32	200010268	ESIA4392	1	=ES+S/39.0	profibus module	für Micromaster 440	6SE6400-1PB00-0AA0	Siemens
T1.32	200010269	ESIA4393	1	=ES+S/39.4	Pulse generator report	für Micromaster 4	6SE6400-0EN00-0AA0	Siemens
T1.32	200010333	ESIA7047	1	=ES+S/39.0	Profibus plug	gerade / Schneidklemmen	6GK 1500-0FC00	Siemens
T1.32	200011393	ESIZ2401	1	=ES+S/39.0	Screen connection record	MICRO MASTER 420	6SE6400-0GP00-0BA0	Siemens
T1.33	200030071	ESIA4302-N	1	=ES+S/40.0	frequency converter	MM440 380-480V / 2,2 KW	6SE 6440-2UD22-2BA1	Siemens
T1.33	200010198	ESIA2400	1	=ES+S/40.0	operater panel	BOP für Micromaster 4	6SE6400-0BP00-0AA0	Siemens
T1.33	200010268	ESIA4392	1	=ES+S/40.0	profibus module	für Micromaster 440	6SE6400-1PB00-0AA0	Siemens
T1.33	200010269	ESIA4393	1	=ES+S/40.4	Pulse generator report	für Micromaster 4	6SE6400-0EN00-0AA0	Siemens
T1.33	200010333	ESIA7047	1	=ES+S/40.0	Profibus plug	gerade / Schneidklemmen	6GK 1500-0FC00	Siemens
T1.33	200011393	ESIZ2401	1	=ES+S/40.0	Screen connection record	MICRO MASTER 420	6SE6400-0GP00-0BA0	Siemens
T1.34	200030071	ESIA4302-N	1	=ES+S/41.0	frequency converter	MM440 380-480V / 2,2 KW	6SE 6440-2UD22-2BA1	Siemens
T1.34	200010198	ESIA2400	1	=ES+S/41.0	operater panel	BOP für Micromaster 4	6SE6400-0BP00-0AA0	Siemens
T1.34	200010268	ESIA4392	1	=ES+S/41.0	profibus module	für Micromaster 440	6SE6400-1PB00-0AA0	Siemens
T1.34	200010269	ESIA4393	1	=ES+S/41.4	Pulse generator report	für Micromaster 4	6SE6400-0EN00-0AA0	Siemens
T1.34	200010333	ESIA7047	1	=ES+S/41.0	Profibus plug	gerade / Schneidklemmen	6GK 1500-0FC00	Siemens
T1.34	200011393	ESIZ2401	1	=ES+S/41.0	Screen connection record	MICRO MASTER 420	6SE6400-0GP00-0BA0	Siemens
T1.35	200030071	ESIA4302-N	1	=ES+S/42.0	frequency converter	MM440 380-480V / 2,2 KW	6SE 6440-2UD22-2BA1	Siemens
T1.35	200010198	ESIA2400	1	=ES+S/42.0	operater panel	BOP für Micromaster 4	6SE6400-0BP00-0AA0	Siemens
T1.35	200010268	ESIA4392	1	=ES+S/42.0	profibus module	für Micromaster 440	6SE6400-1PB00-0AA0	Siemens
T1.35	200010269	ESIA4393	1	=ES+S/42.4	Pulse generator report	für Micromaster 4	6SE6400-0EN00-0AA0	Siemens
T1.35	200010333	ESIA7047	1	=ES+S/42.0	Profibus plug	gerade / Schneidklemmen	6GK 1500-0FC00	Siemens
T1.35	200011393	ESIZ2401	1	=ES+S/42.0	Screen connection record	MICRO MASTER 420	6SE6400-0GP00-0BA0	Siemens
T1.36	200030071	ESIA4302-N	1	=ES+S/43.0	frequency converter	MM440 380-480V / 2,2 KW	6SE 6440-2UD22-2BA1	Siemens
T1.36	200010198	ESIA2400	1	=ES+S/43.0	operater panel	BOP für Micromaster 4	6SE6400-0BP00-0AA0	Siemens
T1.36	200010268	ESIA4392	1	=ES+S/43.0	profibus module	für Micromaster 440	6SE6400-1PB00-0AA0	Siemens
T1.36	200010269	ESIA4393	1	=ES+S/43.4	Pulse generator report	für Micromaster 4	6SE6400-0EN00-0AA0	Siemens
T1.36	200010333	ESIA7047	1	=ES+S/43.0	Profibus plug	gerade / Schneidklemmen	6GK 1500-0FC00	Siemens
T1.36	200011393	ESIZ2401	1	=ES+S/43.0	Screen connection record	MICRO MASTER 420	6SE6400-0GP00-0BA0	Siemens
T1.37	200030071	ESIA4302-N	1	=ES+S/45.0	frequency converter	MM440 380-480V / 2,2 KW	6SE 6440-2UD22-2BA1	Siemens
T1.37	200010198	ESIA2400	1	=ES+S/45.0	operater panel	BOP für Micromaster 4	6SE6400-0BP00-0AA0	Siemens
T1.37	200010268	ESIA4392	1	=ES+S/45.0	profibus module	für Micromaster 440	6SE6400-1PB00-0AA0	Siemens
T1.37	200010269	ESIA4393	1	=ES+S/45.4	Pulse generator report	für Micromaster 4	6SE6400-0EN00-0AA0	Siemens
T1.37	200010333	ESIA7047	1	=ES+S/45.0	Profibus plug	gerade / Schneidklemmen	6GK 1500-0FC00	Siemens
T1.37	200011393	ESIZ2401	1	=ES+S/45.0	Screen connection record	MICRO MASTER 420	6SE6400-0GP00-0BA0	Siemens
T1.38	200030071	ESIA4302-N	1	=ES+S/46.0	frequency converter	MM440 380-480V / 2,2 KW	6SE 6440-2UD22-2BA1	Siemens
T1.38	200010198	ESIA2400	1	=ES+S/46.0	operater panel	BOP für Micromaster 4	6SE6400-0BP00-0AA0	Siemens

Parts list

electrical construction

Artilelstückliste_Elo_SAP_001

DT	Part number new	Part number old	Quantity	Placement	Designation 1	Designation 2	Order number	Manufacturer
T1.38	200010268	ESIA4392	1	=ES+S/46.0	profibus module	für Micromaster 440	6SE6400-1PB00-0AA0	Siemens
T1.38	200010269	ESIA4393	1	=ES+S/46.4	Pulse generator report	für Micromaster 4	6SE6400-0EN00-0AA0	Siemens
T1.38	200010333	ESIA7047	1	=ES+S/46.0	Profibus plug	gerade / Schneidklemmen	6GK 1500-0FC00	Siemens
T1.38	200011393	ESIZ2401	1	=ES+S/46.0	Screen connection record	MICRO MASTER 420	6SE6400-0GP00-0BA0	Siemens
T1.39	200030071	ESIA4302-N	1	=ES+S/47.0	frequency converter	MM440 380-480V / 2,2 KW	6SE 6440-2UD22-2BA1	Siemens
T1.39	200010198	ESIA2400	1	=ES+S/47.0	operater panel	BOP für Micromaster 4	6SE6400-0BP00-0AA0	Siemens
T1.39	200010268	ESIA4392	1	=ES+S/47.0	profibus module	für Micromaster 440	6SE6400-1PB00-0AA0	Siemens
T1.39	200010269	ESIA4393	1	=ES+S/47.4	Pulse generator report	für Micromaster 4	6SE6400-0EN00-0AA0	Siemens
T1.39	200010333	ESIA7047	1	=ES+S/47.0	Profibus plug	gerade / Schneidklemmen	6GK 1500-0FC00	Siemens
T1.39	200011393	ESIZ2401	1	=ES+S/47.0	Screen connection record	MICRO MASTER 420	6SE6400-0GP00-0BA0	Siemens
T1.40	200030071	ESIA4302-N	1	=ES+S/48.0	frequency converter	MM440 380-480V / 2,2 KW	6SE 6440-2UD22-2BA1	Siemens
T1.40	200010198	ESIA2400	1	=ES+S/48.0	operater panel	BOP für Micromaster 4	6SE6400-0BP00-0AA0	Siemens
T1.40	200010268	ESIA4392	1	=ES+S/48.0	profibus module	für Micromaster 440	6SE6400-1PB00-0AA0	Siemens
T1.40	200010269	ESIA4393	1	=ES+S/48.4	Pulse generator report	für Micromaster 4	6SE6400-0EN00-0AA0	Siemens
T1.40	200010333	ESIA7047	1	=ES+S/48.0	Profibus plug	gerade / Schneidklemmen	6GK 1500-0FC00	Siemens
T1.40	200011393	ESIZ2401	1	=ES+S/48.0	Screen connection record	MICRO MASTER 420	6SE6400-0GP00-0BA0	Siemens
T1.41	200030071	ESIA4302-N	1	=ES+S/49.0	frequency converter	MM440 380-480V / 2,2 KW	6SE 6440-2UD22-2BA1	Siemens
T1.41	200010198	ESIA2400	1	=ES+S/49.0	operater panel	BOP für Micromaster 4	6SE6400-0BP00-0AA0	Siemens
T1.41	200010268	ESIA4392	1	=ES+S/49.0	profibus module	für Micromaster 440	6SE6400-1PB00-0AA0	Siemens
T1.41	200010269	ESIA4393	1	=ES+S/49.4	Pulse generator report	für Micromaster 4	6SE6400-0EN00-0AA0	Siemens
T1.41	200010333	ESIA7047	1	=ES+S/49.0	Profibus plug	gerade / Schneidklemmen	6GK 1500-0FC00	Siemens
T1.41	200011393	ESIZ2401	1	=ES+S/49.0	Screen connection record	MICRO MASTER 420	6SE6400-0GP00-0BA0	Siemens
T1.42	200030071	ESIA4302-N	1	=ES+S/50.0	frequency converter	MM440 380-480V / 2,2 KW	6SE 6440-2UD22-2BA1	Siemens
T1.42	200010198	ESIA2400	1	=ES+S/50.0	operater panel	BOP für Micromaster 4	6SE6400-0BP00-0AA0	Siemens
T1.42	200010268	ESIA4392	1	=ES+S/50.0	profibus module	für Micromaster 440	6SE6400-1PB00-0AA0	Siemens
T1.42	200010269	ESIA4393	1	=ES+S/50.4	Pulse generator report	für Micromaster 4	6SE6400-0EN00-0AA0	Siemens
T1.42	200010333	ESIA7047	1	=ES+S/50.0	Profibus plug	gerade / Schneidklemmen	6GK 1500-0FC00	Siemens
T1.42	200011393	ESIZ2401	1	=ES+S/50.0	Screen connection record	MICRO MASTER 420	6SE6400-0GP00-0BA0	Siemens
T1.43	200030071	ESIA4302-N	1	=ES+S/52.0	frequency converter	MM440 380-480V / 2,2 KW	6SE 6440-2UD22-2BA1	Siemens
T1.43	200010198	ESIA2400	1	=ES+S/52.0	operater panel	BOP für Micromaster 4	6SE6400-0BP00-0AA0	Siemens
T1.43	200010268	ESIA4392	1	=ES+S/52.0	profibus module	für Micromaster 440	6SE6400-1PB00-0AA0	Siemens
T1.43	200010269	ESIA4393	1	=ES+S/52.4	Pulse generator report	für Micromaster 4	6SE6400-0EN00-0AA0	Siemens
T1.43	200010333	ESIA7047	1	=ES+S/52.0	Profibus plug	gerade / Schneidklemmen	6GK 1500-0FC00	Siemens
T1.43	200011393	ESIZ2401	1	=ES+S/52.0	Screen connection record	MICRO MASTER 420	6SE6400-0GP00-0BA0	Siemens
T1.44	200030071	ESIA4302-N	1	=ES+S/53.0	frequency converter	MM440 380-480V / 2,2 KW	6SE 6440-2UD22-2BA1	Siemens
T1.44	200010198	ESIA2400	1	=ES+S/53.0	operater panel	BOP für Micromaster 4	6SE6400-0BP00-0AA0	Siemens
T1.44	200010268	ESIA4392	1	=ES+S/53.0	profibus module	für Micromaster 440	6SE6400-1PB00-0AA0	Siemens
T1.44	200010269	ESIA4393	1	=ES+S/53.4	Pulse generator report	für Micromaster 4	6SE6400-0EN00-0AA0	Siemens

Parts list

electrical construction

Artilelstückliste_Elo_SAP_001

DT	Part number new	Part number old	Quantity	Placement	Designation 1	Designation 2	Order number	Manufacturer
T1.44	200010333	ESIA7047	1	=ES+S/53.0	Profibus plug	gerade / Schneidklemmen	6GK 1500-0FC00	Siemens
T1.44	200011393	ESIZ2401	1	=ES+S/53.0	Screen connection record	MICRO MASTER 420	6SE6400-0GP00-0BA0	Siemens
T1.45	200030071	ESIA4302-N	1	=ES+S/54.0	frequency converter	MM440 380-480V / 2,2 KW	6SE 6440-2UD22-2BA1	Siemens
T1.45	200010198	ESIA2400	1	=ES+S/54.0	operater panel	BOP für Micromaster 4	6SE6400-0BP00-0AA0	Siemens
T1.45	200010268	ESIA4392	1	=ES+S/54.0	profibus module	für Micromaster 440	6SE6400-1PB00-0AA0	Siemens
T1.45	200010269	ESIA4393	1	=ES+S/54.4	Pulse generator report	für Micromaster 4	6SE6400-0EN00-0AA0	Siemens
T1.45	200010333	ESIA7047	1	=ES+S/54.0	Profibus plug	gerade / Schneidklemmen	6GK 1500-0FC00	Siemens
T1.45	200011393	ESIZ2401	1	=ES+S/54.0	Screen connection record	MICRO MASTER 420	6SE6400-0GP00-0BA0	Siemens
T1.46	200030071	ESIA4302-N	1	=ES+S/55.0	frequency converter	MM440 380-480V / 2,2 KW	6SE 6440-2UD22-2BA1	Siemens
T1.46	200010198	ESIA2400	1	=ES+S/55.0	operater panel	BOP für Micromaster 4	6SE6400-0BP00-0AA0	Siemens
T1.46	200010268	ESIA4392	1	=ES+S/55.0	profibus module	für Micromaster 440	6SE6400-1PB00-0AA0	Siemens
T1.46	200010269	ESIA4393	1	=ES+S/55.4	Pulse generator report	für Micromaster 4	6SE6400-0EN00-0AA0	Siemens
T1.46	200010333	ESIA7047	1	=ES+S/55.0	Profibus plug	gerade / Schneidklemmen	6GK 1500-0FC00	Siemens
T1.46	200011393	ESIZ2401	1	=ES+S/55.0	Screen connection record	MICRO MASTER 420	6SE6400-0GP00-0BA0	Siemens
T1.47	200030071	ESIA4302-N	1	=ES+S/56.0	frequency converter	MM440 380-480V / 2,2 KW	6SE 6440-2UD22-2BA1	Siemens
T1.47	200010198	ESIA2400	1	=ES+S/56.0	operater panel	BOP für Micromaster 4	6SE6400-0BP00-0AA0	Siemens
T1.47	200010268	ESIA4392	1	=ES+S/56.0	profibus module	für Micromaster 440	6SE6400-1PB00-0AA0	Siemens
T1.47	200010269	ESIA4393	1	=ES+S/56.4	Pulse generator report	für Micromaster 4	6SE6400-0EN00-0AA0	Siemens
T1.47	200010333	ESIA7047	1	=ES+S/56.0	Profibus plug	gerade / Schneidklemmen	6GK 1500-0FC00	Siemens
T1.47	200011393	ESIZ2401	1	=ES+S/56.0	Screen connection record	MICRO MASTER 420	6SE6400-0GP00-0BA0	Siemens
T1.48	200030071	ESIA4302-N	1	=ES+S/57.0	frequency converter	MM440 380-480V / 2,2 KW	6SE 6440-2UD22-2BA1	Siemens
T1.48	200010198	ESIA2400	1	=ES+S/57.0	operater panel	BOP für Micromaster 4	6SE6400-0BP00-0AA0	Siemens
T1.48	200010268	ESIA4392	1	=ES+S/57.0	profibus module	für Micromaster 440	6SE6400-1PB00-0AA0	Siemens
T1.48	200010269	ESIA4393	1	=ES+S/57.4	Pulse generator report	für Micromaster 4	6SE6400-0EN00-0AA0	Siemens
T1.48	200010333	ESIA7047	1	=ES+S/57.0	Profibus plug	gerade / Schneidklemmen	6GK 1500-0FC00	Siemens
T1.48	200011393	ESIZ2401	1	=ES+S/57.0	Screen connection record	MICRO MASTER 420	6SE6400-0GP00-0BA0	Siemens
T1.49	200030071	ESIA4302-N	1	=ES+S/59.0	frequency converter	MM440 380-480V / 2,2 KW	6SE 6440-2UD22-2BA1	Siemens
T1.49	200010198	ESIA2400	1	=ES+S/59.0	operater panel	BOP für Micromaster 4	6SE6400-0BP00-0AA0	Siemens
T1.49	200010268	ESIA4392	1	=ES+S/59.0	profibus module	für Micromaster 440	6SE6400-1PB00-0AA0	Siemens
T1.49	200010269	ESIA4393	1	=ES+S/59.4	Pulse generator report	für Micromaster 4	6SE6400-0EN00-0AA0	Siemens
T1.49	200010333	ESIA7047	1	=ES+S/59.0	Profibus plug	gerade / Schneidklemmen	6GK 1500-0FC00	Siemens
T1.49	200011393	ESIZ2401	1	=ES+S/59.0	Screen connection record	MICRO MASTER 420	6SE6400-0GP00-0BA0	Siemens
T1.50	200030071	ESIA4302-N	1	=ES+S/60.0	frequency converter	MM440 380-480V / 2,2 KW	6SE 6440-2UD22-2BA1	Siemens
T1.50	200010198	ESIA2400	1	=ES+S/60.0	operater panel	BOP für Micromaster 4	6SE6400-0BP00-0AA0	Siemens
T1.50	200010268	ESIA4392	1	=ES+S/60.0	profibus module	für Micromaster 440	6SE6400-1PB00-0AA0	Siemens
T1.50	200010269	ESIA4393	1	=ES+S/60.4	Pulse generator report	für Micromaster 4	6SE6400-0EN00-0AA0	Siemens
T1.50	200010333	ESIA7047	1	=ES+S/60.0	Profibus plug	gerade / Schneidklemmen	6GK 1500-0FC00	Siemens
T1.50	200011393	ESIZ2401	1	=ES+S/60.0	Screen connection record	MICRO MASTER 420	6SE6400-0GP00-0BA0	Siemens

Parts list

electrical construction

Artilelstückliste_Elo_SAP_001

DT	Part number new	Part number old	Quantity	Placement	Designation 1	Designation 2	Order number	Manufacturer
T1.51	200030071	ESIA4302-N	1	=ES+S/61.0	frequency converter	MM440 380-480V / 2,2 KW	6SE 6440-2UD22-2BA1	Siemens
T1.51	200010198	ESIA2400	1	=ES+S/61.0	operater panel	BOP für Micromaster 4	6SE6400-0BP00-0AA0	Siemens
T1.51	200010268	ESIA4392	1	=ES+S/61.0	profibus module	für Micromaster 440	6SE6400-1PB00-0AA0	Siemens
T1.51	200010269	ESIA4393	1	=ES+S/61.4	Pulse generator report	für Micromaster 4	6SE6400-0EN00-0AA0	Siemens
T1.51	200010333	ESIA7047	1	=ES+S/61.0	Profibus plug	gerade / Schneidklemmen	6GK 1500-0FC00	Siemens
T1.51	200011393	ESIZ2401	1	=ES+S/61.0	Screen connection record	MICRO MASTER 420	6SE6400-0GP00-0BA0	Siemens
T1.52	200030071	ESIA4302-N	1	=ES+S/62.0	frequency converter	MM440 380-480V / 2,2 KW	6SE 6440-2UD22-2BA1	Siemens
T1.52	200010198	ESIA2400	1	=ES+S/62.0	operater panel	BOP für Micromaster 4	6SE6400-0BP00-0AA0	Siemens
T1.52	200010268	ESIA4392	1	=ES+S/62.0	profibus module	für Micromaster 440	6SE6400-1PB00-0AA0	Siemens
T1.52	200010269	ESIA4393	1	=ES+S/62.4	Pulse generator report	für Micromaster 4	6SE6400-0EN00-0AA0	Siemens
T1.52	200010333	ESIA7047	1	=ES+S/62.0	Profibus plug	gerade / Schneidklemmen	6GK 1500-0FC00	Siemens
T1.52	200011393	ESIZ2401	1	=ES+S/62.0	Screen connection record	MICRO MASTER 420	6SE6400-0GP00-0BA0	Siemens
T1.53	200030071	ESIA4302-N	1	=ES+S/63.0	frequency converter	MM440 380-480V / 2,2 KW	6SE 6440-2UD22-2BA1	Siemens
T1.53	200010198	ESIA2400	1	=ES+S/63.0	operater panel	BOP für Micromaster 4	6SE6400-0BP00-0AA0	Siemens
T1.53	200010268	ESIA4392	1	=ES+S/63.0	profibus module	für Micromaster 440	6SE6400-1PB00-0AA0	Siemens
T1.53	200010269	ESIA4393	1	=ES+S/63.4	Pulse generator report	für Micromaster 4	6SE6400-0EN00-0AA0	Siemens
T1.53	200010333	ESIA7047	1	=ES+S/63.0	Profibus plug	gerade / Schneidklemmen	6GK 1500-0FC00	Siemens
T1.53	200011393	ESIZ2401	1	=ES+S/63.0	Screen connection record	MICRO MASTER 420	6SE6400-0GP00-0BA0	Siemens
T1.54	200030071	ESIA4302-N	1	=ES+S/64.0	frequency converter	MM440 380-480V / 2,2 KW	6SE 6440-2UD22-2BA1	Siemens
T1.54	200010198	ESIA2400	1	=ES+S/64.0	operater panel	BOP für Micromaster 4	6SE6400-0BP00-0AA0	Siemens
T1.54	200010268	ESIA4392	1	=ES+S/64.0	profibus module	für Micromaster 440	6SE6400-1PB00-0AA0	Siemens
T1.54	200010269	ESIA4393	1	=ES+S/64.4	Pulse generator report	für Micromaster 4	6SE6400-0EN00-0AA0	Siemens
T1.54	200010333	ESIA7047	1	=ES+S/64.0	Profibus plug	gerade / Schneidklemmen	6GK 1500-0FC00	Siemens
T1.54	200011393	ESIZ2401	1	=ES+S/64.0	Screen connection record	MICRO MASTER 420	6SE6400-0GP00-0BA0	Siemens
T1.55	200030071	ESIA4302-N	1	=ES+S/68.0	frequency converter	MM440 380-480V / 2,2 KW	6SE 6440-2UD22-2BA1	Siemens
T1.55	200010198	ESIA2400	1	=ES+S/68.0	operater panel	BOP für Micromaster 4	6SE6400-0BP00-0AA0	Siemens
T1.55	200010268	ESIA4392	1	=ES+S/68.0	profibus module	für Micromaster 440	6SE6400-1PB00-0AA0	Siemens
T1.55	200010269	ESIA4393	1	=ES+S/68.4	Pulse generator report	für Micromaster 4	6SE6400-0EN00-0AA0	Siemens
T1.55	200010333	ESIA7047	1	=ES+S/68.0	Profibus plug	gerade / Schneidklemmen	6GK 1500-0FC00	Siemens
T1.55	200011393	ESIZ2401	1	=ES+S/68.0	Screen connection record	MICRO MASTER 420	6SE6400-0GP00-0BA0	Siemens
T1.56	200030071	ESIA4302-N	1	=ES+S/69.0	frequency converter	MM440 380-480V / 2,2 KW	6SE 6440-2UD22-2BA1	Siemens
T1.56	200010198	ESIA2400	1	=ES+S/69.0	operater panel	BOP für Micromaster 4	6SE6400-0BP00-0AA0	Siemens
T1.56	200010268	ESIA4392	1	=ES+S/69.0	profibus module	für Micromaster 440	6SE6400-1PB00-0AA0	Siemens
T1.56	200010269	ESIA4393	1	=ES+S/69.4	Pulse generator report	für Micromaster 4	6SE6400-0EN00-0AA0	Siemens
T1.56	200010333	ESIA7047	1	=ES+S/69.0	Profibus plug	gerade / Schneidklemmen	6GK 1500-0FC00	Siemens
T1.56	200011393	ESIZ2401	1	=ES+S/69.0	Screen connection record	MICRO MASTER 420	6SE6400-0GP00-0BA0	Siemens
T1.57	200030071	ESIA4302-N	1	=ES+S/70.0	frequency converter	MM440 380-480V / 2,2 KW	6SE 6440-2UD22-2BA1	Siemens
T1.57	200010198	ESIA2400	1	=ES+S/70.0	operater panel	BOP für Micromaster 4	6SE6400-0BP00-0AA0	Siemens

Parts list

electrical construction

Artilelstückliste_Elo_SAP_001

DT	Part number new	Part number old	Quantity	Placement	Designation 1	Designation 2	Order number	Manufacturer
T1.57	200010268	ESIA4392	1	=ES+S/70.0	profibus module	für Micromaster 440	6SE6400-1PB00-0AA0	Siemens
T1.57	200010269	ESIA4393	1	=ES+S/70.4	Pulse generator report	für Micromaster 4	6SE6400-0EN00-0AA0	Siemens
T1.57	200010333	ESIA7047	1	=ES+S/70.0	Profibus plug	gerade / Schneidklemmen	6GK 1500-0FC00	Siemens
T1.57	200011393	ESIZ2401	1	=ES+S/70.0	Screen connection record	MICRO MASTER 420	6SE6400-0GP00-0BA0	Siemens
T1.58	200030071	ESIA4302-N	1	=ES+S/71.0	frequency converter	MM440 380-480V / 2,2 KW	6SE 6440-2UD22-2BA1	Siemens
T1.58	200010198	ESIA2400	1	=ES+S/71.0	operater panel	BOP für Micromaster 4	6SE6400-0BP00-0AA0	Siemens
T1.58	200010268	ESIA4392	1	=ES+S/71.0	profibus module	für Micromaster 440	6SE6400-1PB00-0AA0	Siemens
T1.58	200010269	ESIA4393	1	=ES+S/71.4	Pulse generator report	für Micromaster 4	6SE6400-0EN00-0AA0	Siemens
T1.58	200010333	ESIA7047	1	=ES+S/71.0	Profibus plug	gerade / Schneidklemmen	6GK 1500-0FC00	Siemens
T1.58	200011393	ESIZ2401	1	=ES+S/71.0	Screen connection record	MICRO MASTER 420	6SE6400-0GP00-0BA0	Siemens
T1.59	200030071	ESIA4302-N	1	=ES+S/72.0	frequency converter	MM440 380-480V / 2,2 KW	6SE 6440-2UD22-2BA1	Siemens
T1.59	200010198	ESIA2400	1	=ES+S/72.0	operater panel	BOP für Micromaster 4	6SE6400-0BP00-0AA0	Siemens
T1.59	200010268	ESIA4392	1	=ES+S/72.0	profibus module	für Micromaster 440	6SE6400-1PB00-0AA0	Siemens
T1.59	200010269	ESIA4393	1	=ES+S/72.4	Pulse generator report	für Micromaster 4	6SE6400-0EN00-0AA0	Siemens
T1.59	200010333	ESIA7047	1	=ES+S/72.0	Profibus plug	gerade / Schneidklemmen	6GK 1500-0FC00	Siemens
T1.59	200011393	ESIZ2401	1	=ES+S/72.0	Screen connection record	MICRO MASTER 420	6SE6400-0GP00-0BA0	Siemens
T1.60	200030071	ESIA4302-N	1	=ES+S/73.0	frequency converter	MM440 380-480V / 2,2 KW	6SE 6440-2UD22-2BA1	Siemens
T1.60	200010198	ESIA2400	1	=ES+S/73.0	operater panel	BOP für Micromaster 4	6SE6400-0BP00-0AA0	Siemens
T1.60	200010268	ESIA4392	1	=ES+S/73.0	profibus module	für Micromaster 440	6SE6400-1PB00-0AA0	Siemens
T1.60	200010269	ESIA4393	1	=ES+S/73.4	Pulse generator report	für Micromaster 4	6SE6400-0EN00-0AA0	Siemens
T1.60	200010333	ESIA7047	1	=ES+S/73.0	Profibus plug	gerade / Schneidklemmen	6GK 1500-0FC00	Siemens
T1.60	200011393	ESIZ2401	1	=ES+S/73.0	Screen connection record	MICRO MASTER 420	6SE6400-0GP00-0BA0	Siemens
T1.61	200030071	ESIA4302-N	1	=ES+S/75.0	frequency converter	MM440 380-480V / 2,2 KW	6SE 6440-2UD22-2BA1	Siemens
T1.61	200010198	ESIA2400	1	=ES+S/75.0	operater panel	BOP für Micromaster 4	6SE6400-0BP00-0AA0	Siemens
T1.61	200010268	ESIA4392	1	=ES+S/75.0	profibus module	für Micromaster 440	6SE6400-1PB00-0AA0	Siemens
T1.61	200010269	ESIA4393	1	=ES+S/75.4	Pulse generator report	für Micromaster 4	6SE6400-0EN00-0AA0	Siemens
T1.61	200010333	ESIA7047	1	=ES+S/75.0	Profibus plug	gerade / Schneidklemmen	6GK 1500-0FC00	Siemens
T1.61	200011393	ESIZ2401	1	=ES+S/75.0	Screen connection record	MICRO MASTER 420	6SE6400-0GP00-0BA0	Siemens
T1.62	200030071	ESIA4302-N	1	=ES+S/76.0	frequency converter	MM440 380-480V / 2,2 KW	6SE 6440-2UD22-2BA1	Siemens
T1.62	200010198	ESIA2400	1	=ES+S/76.0	operater panel	BOP für Micromaster 4	6SE6400-0BP00-0AA0	Siemens
T1.62	200010268	ESIA4392	1	=ES+S/76.0	profibus module	für Micromaster 440	6SE6400-1PB00-0AA0	Siemens
T1.62	200010269	ESIA4393	1	=ES+S/76.4	Pulse generator report	für Micromaster 4	6SE6400-0EN00-0AA0	Siemens
T1.62	200010333	ESIA7047	1	=ES+S/76.0	Profibus plug	gerade / Schneidklemmen	6GK 1500-0FC00	Siemens
T1.62	200011393	ESIZ2401	1	=ES+S/76.0	Screen connection record	MICRO MASTER 420	6SE6400-0GP00-0BA0	Siemens
T1.63	200030071	ESIA4302-N	1	=ES+S/77.0	frequency converter	MM440 380-480V / 2,2 KW	6SE 6440-2UD22-2BA1	Siemens
T1.63	200010198	ESIA2400	1	=ES+S/77.0	operater panel	BOP für Micromaster 4	6SE6400-0BP00-0AA0	Siemens
T1.63	200010268	ESIA4392	1	=ES+S/77.0	profibus module	für Micromaster 440	6SE6400-1PB00-0AA0	Siemens
T1.63	200010269	ESIA4393	1	=ES+S/77.4	Pulse generator report	für Micromaster 4	6SE6400-0EN00-0AA0	Siemens

Parts list

electrical construction

Artilelstückliste_Elo_SAP_001

DT	Part number new	Part number old	Quantity	Placement	Designation 1	Designation 2	Order number	Manufacturer
T1.63	200010333	ESIA7047	1	=ES+S/77.0	Profibus plug	gerade / Schneidklemmen	6GK 1500-0FC00	Siemens
T1.63	200011393	ESIZ2401	1	=ES+S/77.0	Screen connection record	MICRO MASTER 420	6SE6400-0GP00-0BA0	Siemens
T1.64	200030071	ESIA4302-N	1	=ES+S/78.0	frequency converter	MM440 380-480V / 2,2 KW	6SE 6440-2UD22-2BA1	Siemens
T1.64	200010198	ESIA2400	1	=ES+S/78.0	operater panel	BOP für Micromaster 4	6SE6400-0BP00-0AA0	Siemens
T1.64	200010268	ESIA4392	1	=ES+S/78.0	profibus module	für Micromaster 440	6SE6400-1PB00-0AA0	Siemens
T1.64	200010269	ESIA4393	1	=ES+S/78.4	Pulse generator report	für Micromaster 4	6SE6400-0EN00-0AA0	Siemens
T1.64	200010333	ESIA7047	1	=ES+S/78.0	Profibus plug	gerade / Schneidklemmen	6GK 1500-0FC00	Siemens
T1.64	200011393	ESIZ2401	1	=ES+S/78.0	Screen connection record	MICRO MASTER 420	6SE6400-0GP00-0BA0	Siemens
T1.65	200030071	ESIA4302-N	1	=ES+S/79.0	frequency converter	MM440 380-480V / 2,2 KW	6SE 6440-2UD22-2BA1	Siemens
T1.65	200010198	ESIA2400	1	=ES+S/79.0	operater panel	BOP für Micromaster 4	6SE6400-0BP00-0AA0	Siemens
T1.65	200010268	ESIA4392	1	=ES+S/79.0	profibus module	für Micromaster 440	6SE6400-1PB00-0AA0	Siemens
T1.65	200010269	ESIA4393	1	=ES+S/79.4	Pulse generator report	für Micromaster 4	6SE6400-0EN00-0AA0	Siemens
T1.65	200010333	ESIA7047	1	=ES+S/79.0	Profibus plug	gerade / Schneidklemmen	6GK 1500-0FC00	Siemens
T1.65	200011393	ESIZ2401	1	=ES+S/79.0	Screen connection record	MICRO MASTER 420	6SE6400-0GP00-0BA0	Siemens
T1.66	200030071	ESIA4302-N	1	=ES+S/80.0	frequency converter	MM440 380-480V / 2,2 KW	6SE 6440-2UD22-2BA1	Siemens
T1.66	200010198	ESIA2400	1	=ES+S/80.0	operater panel	BOP für Micromaster 4	6SE6400-0BP00-0AA0	Siemens
T1.66	200010268	ESIA4392	1	=ES+S/80.0	profibus module	für Micromaster 440	6SE6400-1PB00-0AA0	Siemens
T1.66	200010269	ESIA4393	1	=ES+S/80.4	Pulse generator report	für Micromaster 4	6SE6400-0EN00-0AA0	Siemens
T1.66	200010333	ESIA7047	1	=ES+S/80.0	Profibus plug	gerade / Schneidklemmen	6GK 1500-0FC00	Siemens
T1.66	200011393	ESIZ2401	1	=ES+S/80.0	Screen connection record	MICRO MASTER 420	6SE6400-0GP00-0BA0	Siemens
T1.67	200030071	ESIA4302-N	1	=ES+S/82.0	frequency converter	MM440 380-480V / 2,2 KW	6SE 6440-2UD22-2BA1	Siemens
T1.67	200010198	ESIA2400	1	=ES+S/82.0	operater panel	BOP für Micromaster 4	6SE6400-0BP00-0AA0	Siemens
T1.67	200010268	ESIA4392	1	=ES+S/82.0	profibus module	für Micromaster 440	6SE6400-1PB00-0AA0	Siemens
T1.67	200010269	ESIA4393	1	=ES+S/82.4	Pulse generator report	für Micromaster 4	6SE6400-0EN00-0AA0	Siemens
T1.67	200010333	ESIA7047	1	=ES+S/82.0	Profibus plug	gerade / Schneidklemmen	6GK 1500-0FC00	Siemens
T1.67	200011393	ESIZ2401	1	=ES+S/82.0	Screen connection record	MICRO MASTER 420	6SE6400-0GP00-0BA0	Siemens
T1.68	200030071	ESIA4302-N	1	=ES+S/83.0	frequency converter	MM440 380-480V / 2,2 KW	6SE 6440-2UD22-2BA1	Siemens
T1.68	200010198	ESIA2400	1	=ES+S/83.0	operater panel	BOP für Micromaster 4	6SE6400-0BP00-0AA0	Siemens
T1.68	200010268	ESIA4392	1	=ES+S/83.0	profibus module	für Micromaster 440	6SE6400-1PB00-0AA0	Siemens
T1.68	200010269	ESIA4393	1	=ES+S/83.4	Pulse generator report	für Micromaster 4	6SE6400-0EN00-0AA0	Siemens
T1.68	200010333	ESIA7047	1	=ES+S/83.0	Profibus plug	gerade / Schneidklemmen	6GK 1500-0FC00	Siemens
T1.68	200011393	ESIZ2401	1	=ES+S/83.0	Screen connection record	MICRO MASTER 420	6SE6400-0GP00-0BA0	Siemens
T1.69	200030071	ESIA4302-N	1	=ES+S/84.0	frequency converter	MM440 380-480V / 2,2 KW	6SE 6440-2UD22-2BA1	Siemens
T1.69	200010198	ESIA2400	1	=ES+S/84.0	operater panel	BOP für Micromaster 4	6SE6400-0BP00-0AA0	Siemens
T1.69	200010268	ESIA4392	1	=ES+S/84.0	profibus module	für Micromaster 440	6SE6400-1PB00-0AA0	Siemens
T1.69	200010269	ESIA4393	1	=ES+S/84.4	Pulse generator report	für Micromaster 4	6SE6400-0EN00-0AA0	Siemens
T1.69	200010333	ESIA7047	1	=ES+S/84.0	Profibus plug	gerade / Schneidklemmen	6GK 1500-0FC00	Siemens
T1.69	200011393	ESIZ2401	1	=ES+S/84.0	Screen connection record	MICRO MASTER 420	6SE6400-0GP00-0BA0	Siemens

Parts list

electrical construction

Artilelstückliste_Elo_SAP_001

DT	Part number new	Part number old	Quantity	Placement	Designation 1	Designation 2	Order number	Manufacturer
T1.70	200030071	ESIA4302-N	1	=ES+S/85.0	frequency converter	MM440 380-480V / 2,2 KW	6SE 6440-2UD22-2BA1	Siemens
T1.70	200010198	ESIA2400	1	=ES+S/85.0	operater panel	BOP für Micromaster 4	6SE6400-0BP00-0AA0	Siemens
T1.70	200010268	ESIA4392	1	=ES+S/85.0	profibus module	für Micromaster 440	6SE6400-1PB00-0AA0	Siemens
T1.70	200010269	ESIA4393	1	=ES+S/85.4	Pulse generator report	für Micromaster 4	6SE6400-0EN00-0AA0	Siemens
T1.70	200010333	ESIA7047	1	=ES+S/85.0	Profibus plug	gerade / Schneidklemmen	6GK 1500-0FC00	Siemens
T1.70	200011393	ESIZ2401	1	=ES+S/85.0	Screen connection record	MICRO MASTER 420	6SE6400-0GP00-0BA0	Siemens
T1.71	200030071	ESIA4302-N	1	=ES+S/86.0	frequency converter	MM440 380-480V / 2,2 KW	6SE 6440-2UD22-2BA1	Siemens
T1.71	200010198	ESIA2400	1	=ES+S/86.0	operater panel	BOP für Micromaster 4	6SE6400-0BP00-0AA0	Siemens
T1.71	200010268	ESIA4392	1	=ES+S/86.0	profibus module	für Micromaster 440	6SE6400-1PB00-0AA0	Siemens
T1.71	200010269	ESIA4393	1	=ES+S/86.4	Pulse generator report	für Micromaster 4	6SE6400-0EN00-0AA0	Siemens
T1.71	200010333	ESIA7047	1	=ES+S/86.0	Profibus plug	gerade / Schneidklemmen	6GK 1500-0FC00	Siemens
T1.71	200011393	ESIZ2401	1	=ES+S/86.0	Screen connection record	MICRO MASTER 420	6SE6400-0GP00-0BA0	Siemens
T1.72	200030071	ESIA4302-N	1	=ES+S/87.0	frequency converter	MM440 380-480V / 2,2 KW	6SE 6440-2UD22-2BA1	Siemens
T1.72	200010198	ESIA2400	1	=ES+S/87.0	operater panel	BOP für Micromaster 4	6SE6400-0BP00-0AA0	Siemens
T1.72	200010268	ESIA4392	1	=ES+S/87.0	profibus module	für Micromaster 440	6SE6400-1PB00-0AA0	Siemens
T1.72	200010269	ESIA4393	1	=ES+S/87.4	Pulse generator report	für Micromaster 4	6SE6400-0EN00-0AA0	Siemens
T1.72	200010333	ESIA7047	1	=ES+S/87.0	Profibus plug	gerade / Schneidklemmen	6GK 1500-0FC00	Siemens
T1.72	200011393	ESIZ2401	1	=ES+S/87.0	Screen connection record	MICRO MASTER 420	6SE6400-0GP00-0BA0	Siemens
T1.73	200030071	ESIA4302-N	1	=ES+S/89.0	frequency converter	MM440 380-480V / 2,2 KW	6SE 6440-2UD22-2BA1	Siemens
T1.73	200010198	ESIA2400	1	=ES+S/89.0	operater panel	BOP für Micromaster 4	6SE6400-0BP00-0AA0	Siemens
T1.73	200010268	ESIA4392	1	=ES+S/89.0	profibus module	für Micromaster 440	6SE6400-1PB00-0AA0	Siemens
T1.73	200010269	ESIA4393	1	=ES+S/89.4	Pulse generator report	für Micromaster 4	6SE6400-0EN00-0AA0	Siemens
T1.73	200010333	ESIA7047	1	=ES+S/89.0	Profibus plug	gerade / Schneidklemmen	6GK 1500-0FC00	Siemens
T1.73	200011393	ESIZ2401	1	=ES+S/89.0	Screen connection record	MICRO MASTER 420	6SE6400-0GP00-0BA0	Siemens
T1.74	200030071	ESIA4302-N	1	=ES+S/90.0	frequency converter	MM440 380-480V / 2,2 KW	6SE 6440-2UD22-2BA1	Siemens
T1.74	200010198	ESIA2400	1	=ES+S/90.0	operater panel	BOP für Micromaster 4	6SE6400-0BP00-0AA0	Siemens
T1.74	200010268	ESIA4392	1	=ES+S/90.0	profibus module	für Micromaster 440	6SE6400-1PB00-0AA0	Siemens
T1.74	200010269	ESIA4393	1	=ES+S/90.4	Pulse generator report	für Micromaster 4	6SE6400-0EN00-0AA0	Siemens
T1.74	200010333	ESIA7047	1	=ES+S/90.0	Profibus plug	gerade / Schneidklemmen	6GK 1500-0FC00	Siemens
T1.74	200011393	ESIZ2401	1	=ES+S/90.0	Screen connection record	MICRO MASTER 420	6SE6400-0GP00-0BA0	Siemens
T1.75	200030071	ESIA4302-N	1	=ES+S/91.0	frequency converter	MM440 380-480V / 2,2 KW	6SE 6440-2UD22-2BA1	Siemens
T1.75	200010198	ESIA2400	1	=ES+S/91.0	operater panel	BOP für Micromaster 4	6SE6400-0BP00-0AA0	Siemens
T1.75	200010268	ESIA4392	1	=ES+S/91.0	profibus module	für Micromaster 440	6SE6400-1PB00-0AA0	Siemens
T1.75	200010269	ESIA4393	1	=ES+S/91.4	Pulse generator report	für Micromaster 4	6SE6400-0EN00-0AA0	Siemens
T1.75	200010333	ESIA7047	1	=ES+S/91.0	Profibus plug	gerade / Schneidklemmen	6GK 1500-0FC00	Siemens
T1.75	200011393	ESIZ2401	1	=ES+S/91.0	Screen connection record	MICRO MASTER 420	6SE6400-0GP00-0BA0	Siemens
T1.76	200030071	ESIA4302-N	1	=ES+S/92.0	frequency converter	MM440 380-480V / 2,2 KW	6SE 6440-2UD22-2BA1	Siemens
T1.76	200010198	ESIA2400	1	=ES+S/92.0	operater panel	BOP für Micromaster 4	6SE6400-0BP00-0AA0	Siemens

Parts list

electrical construction

Artilelstückliste_Elo_SAP_001

DT	Part number new	Part number old	Quantity	Placement	Designation 1	Designation 2	Order number	Manufacturer
T1.76	200010268	ESIA4392	1	=ES+S/92.0	profibus module	für Micromaster 440	6SE6400-1PB00-0AA0	Siemens
T1.76	200010269	ESIA4393	1	=ES+S/92.4	Pulse generator report	für Micromaster 4	6SE6400-0EN00-0AA0	Siemens
T1.76	200010333	ESIA7047	1	=ES+S/92.0	Profibus plug	gerade / Schneidklemmen	6GK 1500-0FC00	Siemens
T1.76	200011393	ESIZ2401	1	=ES+S/92.0	Screen connection record	MICRO MASTER 420	6SE6400-0GP00-0BA0	Siemens
T1.77	200030071	ESIA4302-N	1	=ES+S/93.0	frequency converter	MM440 380-480V / 2,2 KW	6SE 6440-2UD22-2BA1	Siemens
T1.77	200010198	ESIA2400	1	=ES+S/93.0	operater panel	BOP für Micromaster 4	6SE6400-0BP00-0AA0	Siemens
T1.77	200010268	ESIA4392	1	=ES+S/93.0	profibus module	für Micromaster 440	6SE6400-1PB00-0AA0	Siemens
T1.77	200010269	ESIA4393	1	=ES+S/93.4	Pulse generator report	für Micromaster 4	6SE6400-0EN00-0AA0	Siemens
T1.77	200010333	ESIA7047	1	=ES+S/93.0	Profibus plug	gerade / Schneidklemmen	6GK 1500-0FC00	Siemens
T1.77	200011393	ESIZ2401	1	=ES+S/93.0	Screen connection record	MICRO MASTER 420	6SE6400-0GP00-0BA0	Siemens
T1.78	200030071	ESIA4302-N	1	=ES+S/94.0	frequency converter	MM440 380-480V / 2,2 KW	6SE 6440-2UD22-2BA1	Siemens
T1.78	200010198	ESIA2400	1	=ES+S/94.0	operater panel	BOP für Micromaster 4	6SE6400-0BP00-0AA0	Siemens
T1.78	200010268	ESIA4392	1	=ES+S/94.0	profibus module	für Micromaster 440	6SE6400-1PB00-0AA0	Siemens
T1.78	200010269	ESIA4393	1	=ES+S/94.4	Pulse generator report	für Micromaster 4	6SE6400-0EN00-0AA0	Siemens
T1.78	200010333	ESIA7047	1	=ES+S/94.0	Profibus plug	gerade / Schneidklemmen	6GK 1500-0FC00	Siemens
T1.78	200011393	ESIZ2401	1	=ES+S/94.0	Screen connection record	MICRO MASTER 420	6SE6400-0GP00-0BA0	Siemens
T1.79	200030071	ESIA4302-N	1	=ES+S/96.0	frequency converter	MM440 380-480V / 2,2 KW	6SE 6440-2UD22-2BA1	Siemens
T1.79	200010198	ESIA2400	1	=ES+S/96.0	operater panel	BOP für Micromaster 4	6SE6400-0BP00-0AA0	Siemens
T1.79	200010268	ESIA4392	1	=ES+S/96.0	profibus module	für Micromaster 440	6SE6400-1PB00-0AA0	Siemens
T1.79	200010269	ESIA4393	1	=ES+S/96.4	Pulse generator report	für Micromaster 4	6SE6400-0EN00-0AA0	Siemens
T1.79	200010333	ESIA7047	1	=ES+S/96.0	Profibus plug	gerade / Schneidklemmen	6GK 1500-0FC00	Siemens
T1.79	200011393	ESIZ2401	1	=ES+S/96.0	Screen connection record	MICRO MASTER 420	6SE6400-0GP00-0BA0	Siemens
T1.80	200030071	ESIA4302-N	1	=ES+S/97.0	frequency converter	MM440 380-480V / 2,2 KW	6SE 6440-2UD22-2BA1	Siemens
T1.80	200010198	ESIA2400	1	=ES+S/97.0	operater panel	BOP für Micromaster 4	6SE6400-0BP00-0AA0	Siemens
T1.80	200010268	ESIA4392	1	=ES+S/97.0	profibus module	für Micromaster 440	6SE6400-1PB00-0AA0	Siemens
T1.80	200010269	ESIA4393	1	=ES+S/97.4	Pulse generator report	für Micromaster 4	6SE6400-0EN00-0AA0	Siemens
T1.80	200010333	ESIA7047	1	=ES+S/97.0	Profibus plug	gerade / Schneidklemmen	6GK 1500-0FC00	Siemens
T1.80	200011393	ESIZ2401	1	=ES+S/97.0	Screen connection record	MICRO MASTER 420	6SE6400-0GP00-0BA0	Siemens
T1.81	200030071	ESIA4302-N	1	=ES+S/98.0	frequency converter	MM440 380-480V / 2,2 KW	6SE 6440-2UD22-2BA1	Siemens
T1.81	200010198	ESIA2400	1	=ES+S/98.0	operater panel	BOP für Micromaster 4	6SE6400-0BP00-0AA0	Siemens
T1.81	200010268	ESIA4392	1	=ES+S/98.0	profibus module	für Micromaster 440	6SE6400-1PB00-0AA0	Siemens
T1.81	200010269	ESIA4393	1	=ES+S/98.4	Pulse generator report	für Micromaster 4	6SE6400-0EN00-0AA0	Siemens
T1.81	200010333	ESIA7047	1	=ES+S/98.0	Profibus plug	gerade / Schneidklemmen	6GK 1500-0FC00	Siemens
T1.81	200011393	ESIZ2401	1	=ES+S/98.0	Screen connection record	MICRO MASTER 420	6SE6400-0GP00-0BA0	Siemens
T1.82	200030071	ESIA4302-N	1	=ES+S/99.0	frequency converter	MM440 380-480V / 2,2 KW	6SE 6440-2UD22-2BA1	Siemens
T1.82	200010198	ESIA2400	1	=ES+S/99.0	operater panel	BOP für Micromaster 4	6SE6400-0BP00-0AA0	Siemens
T1.82	200010268	ESIA4392	1	=ES+S/99.0	profibus module	für Micromaster 440	6SE6400-1PB00-0AA0	Siemens
T1.82	200010269	ESIA4393	1	=ES+S/99.4	Pulse generator report	für Micromaster 4	6SE6400-0EN00-0AA0	Siemens

Parts list

electrical construction

Artilelstückliste_Elo_SAP_001

DT	Part number new	Part number old	Quantity	Placement	Designation 1	Designation 2	Order number	Manufacturer
T1.82	200010333	ESIA7047	1	=ES+S/99.0	Profibus plug	gerade / Schneidklemmen	6GK 1500-0FC00	Siemens
T1.82	200011393	ESIZ2401	1	=ES+S/99.0	Screen connection record	MICRO MASTER 420	6SE6400-0GP00-0BA0	Siemens
T1.83	200030071	ESIA4302-N	1	=ES+S/100.0	frequency converter	MM440 380-480V / 2,2 KW	6SE 6440-2UD22-2BA1	Siemens
T1.83	200010198	ESIA2400	1	=ES+S/100.0	operater panel	BOP für Micromaster 4	6SE6400-0BP00-0AA0	Siemens
T1.83	200010268	ESIA4392	1	=ES+S/100.0	profibus module	für Micromaster 440	6SE6400-1PB00-0AA0	Siemens
T1.83	200010269	ESIA4393	1	=ES+S/100.4	Pulse generator report	für Micromaster 4	6SE6400-0EN00-0AA0	Siemens
T1.83	200010333	ESIA7047	1	=ES+S/100.0	Profibus plug	gerade / Schneidklemmen	6GK 1500-0FC00	Siemens
T1.83	200011393	ESIZ2401	1	=ES+S/100.0	Screen connection record	MICRO MASTER 420	6SE6400-0GP00-0BA0	Siemens
T1.84	200030071	ESIA4302-N	1	=ES+S/101.0	frequency converter	MM440 380-480V / 2,2 KW	6SE 6440-2UD22-2BA1	Siemens
T1.84	200010198	ESIA2400	1	=ES+S/101.0	operater panel	BOP für Micromaster 4	6SE6400-0BP00-0AA0	Siemens
T1.84	200010268	ESIA4392	1	=ES+S/101.0	profibus module	für Micromaster 440	6SE6400-1PB00-0AA0	Siemens
T1.84	200010269	ESIA4393	1	=ES+S/101.4	Pulse generator report	für Micromaster 4	6SE6400-0EN00-0AA0	Siemens
T1.84	200010333	ESIA7047	1	=ES+S/101.0	Profibus plug	gerade / Schneidklemmen	6GK 1500-0FC00	Siemens
T1.84	200011393	ESIZ2401	1	=ES+S/101.0	Screen connection record	MICRO MASTER 420	6SE6400-0GP00-0BA0	Siemens
T1.85	200030071	ESIA4302-N	1	=ES+S/103.0	frequency converter	MM440 380-480V / 2,2 KW	6SE 6440-2UD22-2BA1	Siemens
T1.85	200010198	ESIA2400	1	=ES+S/103.0	operater panel	BOP für Micromaster 4	6SE6400-0BP00-0AA0	Siemens
T1.85	200010268	ESIA4392	1	=ES+S/103.0	profibus module	für Micromaster 440	6SE6400-1PB00-0AA0	Siemens
T1.85	200010269	ESIA4393	1	=ES+S/103.4	Pulse generator report	für Micromaster 4	6SE6400-0EN00-0AA0	Siemens
T1.85	200010333	ESIA7047	1	=ES+S/103.0	Profibus plug	gerade / Schneidklemmen	6GK 1500-0FC00	Siemens
T1.85	200011393	ESIZ2401	1	=ES+S/103.0	Screen connection record	MICRO MASTER 420	6SE6400-0GP00-0BA0	Siemens
T1.86	200030071	ESIA4302-N	1	=ES+S/104.0	frequency converter	MM440 380-480V / 2,2 KW	6SE 6440-2UD22-2BA1	Siemens
T1.86	200010198	ESIA2400	1	=ES+S/104.0	operater panel	BOP für Micromaster 4	6SE6400-0BP00-0AA0	Siemens
T1.86	200010268	ESIA4392	1	=ES+S/104.0	profibus module	für Micromaster 440	6SE6400-1PB00-0AA0	Siemens
T1.86	200010269	ESIA4393	1	=ES+S/104.4	Pulse generator report	für Micromaster 4	6SE6400-0EN00-0AA0	Siemens
T1.86	200010333	ESIA7047	1	=ES+S/104.0	Profibus plug	gerade / Schneidklemmen	6GK 1500-0FC00	Siemens
T1.86	200011393	ESIZ2401	1	=ES+S/104.0	Screen connection record	MICRO MASTER 420	6SE6400-0GP00-0BA0	Siemens
T1.87	200030071	ESIA4302-N	1	=ES+S/105.0	frequency converter	MM440 380-480V / 2,2 KW	6SE 6440-2UD22-2BA1	Siemens
T1.87	200010198	ESIA2400	1	=ES+S/105.0	operater panel	BOP für Micromaster 4	6SE6400-0BP00-0AA0	Siemens
T1.87	200010268	ESIA4392	1	=ES+S/105.0	profibus module	für Micromaster 440	6SE6400-1PB00-0AA0	Siemens
T1.87	200010269	ESIA4393	1	=ES+S/105.4	Pulse generator report	für Micromaster 4	6SE6400-0EN00-0AA0	Siemens
T1.87	200010333	ESIA7047	1	=ES+S/105.0	Profibus plug	gerade / Schneidklemmen	6GK 1500-0FC00	Siemens
T1.87	200011393	ESIZ2401	1	=ES+S/105.0	Screen connection record	MICRO MASTER 420	6SE6400-0GP00-0BA0	Siemens
T1.88	200030071	ESIA4302-N	1	=ES+S/106.0	frequency converter	MM440 380-480V / 2,2 KW	6SE 6440-2UD22-2BA1	Siemens
T1.88	200010198	ESIA2400	1	=ES+S/106.0	operater panel	BOP für Micromaster 4	6SE6400-0BP00-0AA0	Siemens
T1.88	200010268	ESIA4392	1	=ES+S/106.0	profibus module	für Micromaster 440	6SE6400-1PB00-0AA0	Siemens
T1.88	200010269	ESIA4393	1	=ES+S/106.4	Pulse generator report	für Micromaster 4	6SE6400-0EN00-0AA0	Siemens
T1.88	200010333	ESIA7047	1	=ES+S/106.0	Profibus plug	gerade / Schneidklemmen	6GK 1500-0FC00	Siemens
T1.88	200011393	ESIZ2401	1	=ES+S/106.0	Screen connection record	MICRO MASTER 420	6SE6400-0GP00-0BA0	Siemens

Parts list

electrical construction

Artilelstückliste_Elo_SAP_001

DT	Part number new	Part number old	Quantity	Placement	Designation 1	Designation 2	Order number	Manufacturer
T1.89	200030071	ESIA4302-N	1	=ES+S/107.0	frequency converter	MM440 380-480V / 2,2 KW	6SE 6440-2UD22-2BA1	Siemens
T1.89	200010198	ESIA2400	1	=ES+S/107.0	operater panel	BOP für Micromaster 4	6SE6400-0BP00-0AA0	Siemens
T1.89	200010268	ESIA4392	1	=ES+S/107.0	profibus module	für Micromaster 440	6SE6400-1PB00-0AA0	Siemens
T1.89	200010269	ESIA4393	1	=ES+S/107.4	Pulse generator report	für Micromaster 4	6SE6400-0EN00-0AA0	Siemens
T1.89	200010333	ESIA7047	1	=ES+S/107.0	Profibus plug	gerade / Schneidklemmen	6GK 1500-0FC00	Siemens
T1.89	200011393	ESIZ2401	1	=ES+S/107.0	Screen connection record	MICRO MASTER 420	6SE6400-0GP00-0BA0	Siemens
T1.90	200030071	ESIA4302-N	1	=ES+S/108.0	frequency converter	MM440 380-480V / 2,2 KW	6SE 6440-2UD22-2BA1	Siemens
T1.90	200010198	ESIA2400	1	=ES+S/108.0	operater panel	BOP für Micromaster 4	6SE6400-0BP00-0AA0	Siemens
T1.90	200010268	ESIA4392	1	=ES+S/108.0	profibus module	für Micromaster 440	6SE6400-1PB00-0AA0	Siemens
T1.90	200010269	ESIA4393	1	=ES+S/108.4	Pulse generator report	für Micromaster 4	6SE6400-0EN00-0AA0	Siemens
T1.90	200010333	ESIA7047	1	=ES+S/108.0	Profibus plug	gerade / Schneidklemmen	6GK 1500-0FC00	Siemens
T1.90	200011393	ESIZ2401	1	=ES+S/108.0	Screen connection record	MICRO MASTER 420	6SE6400-0GP00-0BA0	Siemens
T1.91	200030071	ESIA4302-N	1	=ES+S/110.0	frequency converter	MM440 380-480V / 2,2 KW	6SE 6440-2UD22-2BA1	Siemens
T1.91	200010198	ESIA2400	1	=ES+S/110.0	operater panel	BOP für Micromaster 4	6SE6400-0BP00-0AA0	Siemens
T1.91	200010268	ESIA4392	1	=ES+S/110.0	profibus module	für Micromaster 440	6SE6400-1PB00-0AA0	Siemens
T1.91	200010269	ESIA4393	1	=ES+S/110.4	Pulse generator report	für Micromaster 4	6SE6400-0EN00-0AA0	Siemens
T1.91	200010333	ESIA7047	1	=ES+S/110.0	Profibus plug	gerade / Schneidklemmen	6GK 1500-0FC00	Siemens
T1.91	200011393	ESIZ2401	1	=ES+S/110.0	Screen connection record	MICRO MASTER 420	6SE6400-0GP00-0BA0	Siemens
T1.92	200030071	ESIA4302-N	1	=ES+S/111.0	frequency converter	MM440 380-480V / 2,2 KW	6SE 6440-2UD22-2BA1	Siemens
T1.92	200010198	ESIA2400	1	=ES+S/111.0	operater panel	BOP für Micromaster 4	6SE6400-0BP00-0AA0	Siemens
T1.92	200010268	ESIA4392	1	=ES+S/111.0	profibus module	für Micromaster 440	6SE6400-1PB00-0AA0	Siemens
T1.92	200010269	ESIA4393	1	=ES+S/111.4	Pulse generator report	für Micromaster 4	6SE6400-0EN00-0AA0	Siemens
T1.92	200010333	ESIA7047	1	=ES+S/111.0	Profibus plug	gerade / Schneidklemmen	6GK 1500-0FC00	Siemens
T1.92	200011393	ESIZ2401	1	=ES+S/111.0	Screen connection record	MICRO MASTER 420	6SE6400-0GP00-0BA0	Siemens
T1.93	200030071	ESIA4302-N	1	=ES+S/112.0	frequency converter	MM440 380-480V / 2,2 KW	6SE 6440-2UD22-2BA1	Siemens
T1.93	200010198	ESIA2400	1	=ES+S/112.0	operater panel	BOP für Micromaster 4	6SE6400-0BP00-0AA0	Siemens
T1.93	200010268	ESIA4392	1	=ES+S/112.0	profibus module	für Micromaster 440	6SE6400-1PB00-0AA0	Siemens
T1.93	200010269	ESIA4393	1	=ES+S/112.4	Pulse generator report	für Micromaster 4	6SE6400-0EN00-0AA0	Siemens
T1.93	200010333	ESIA7047	1	=ES+S/112.0	Profibus plug	gerade / Schneidklemmen	6GK 1500-0FC00	Siemens
T1.93	200011393	ESIZ2401	1	=ES+S/112.0	Screen connection record	MICRO MASTER 420	6SE6400-0GP00-0BA0	Siemens
T1.95	200030071	ESIA4302-N	1	=ES+S/113.0	frequency converter	MM440 380-480V / 2,2 KW	6SE 6440-2UD22-2BA1	Siemens
T1.95	200010198	ESIA2400	1	=ES+S/113.0	operater panel	BOP für Micromaster 4	6SE6400-0BP00-0AA0	Siemens
T1.95	200010268	ESIA4392	1	=ES+S/113.0	profibus module	für Micromaster 440	6SE6400-1PB00-0AA0	Siemens
T1.95	200010269	ESIA4393	1	=ES+S/113.4	Pulse generator report	für Micromaster 4	6SE6400-0EN00-0AA0	Siemens
T1.95	200010333	ESIA7047	1	=ES+S/113.0	Profibus plug	gerade / Schneidklemmen	6GK 1500-0FC00	Siemens
T1.95	200011393	ESIZ2401	1	=ES+S/113.0	Screen connection record	MICRO MASTER 420	6SE6400-0GP00-0BA0	Siemens
T1.97	200030045	ESIA4305-N	1	=ES+S/114.0	frequency converter	MM440 380-480V / 5,5 KW	6SE 6440-2UD25-5CA1	Siemens
T1.97	200010198	ESIA2400	1	=ES+S/114.0	operater panel	BOP für Micromaster 4	6SE6400-0BP00-0AA0	Siemens

Parts list

electrical construction

Artilelstückliste_Elo_SAP_001

DT	Part number new	Part number old	Quantity	Placement	Designation 1	Designation 2	Order number	Manufacturer
T1.97	200010268	ESIA4392	1	=ES+S/114.0	profibus module	für Micromaster 440	6SE6400-1PB00-0AA0	Siemens
T1.97	200010269	ESIA4393	1	=ES+S/114.4	Pulse generator report	für Micromaster 4	6SE6400-0EN00-0AA0	Siemens
T1.97	200010333	ESIA7047	1	=ES+S/114.0	Profibus plug	gerade / Schneidklemmen	6GK 1500-0FC00	Siemens
T1.97	200011394	ESIZ2402	1	=ES+S/114.0	Screen connection record	für MICRO MASTER 420	6SE6400-0GP00-0CA0	Siemens
T1.99	200030071	ESIA4302-N	1	=ES+S/115.0	frequency converter	MM440 380-480V / 2,2 KW	6SE 6440-2UD22-2BA1	Siemens
T1.99	200010198	ESIA2400	1	=ES+S/115.0	operater panel	BOP für Micromaster 4	6SE6400-0BP00-0AA0	Siemens
T1.99	200010268	ESIA4392	1	=ES+S/115.0	profibus module	für Micromaster 440	6SE6400-1PB00-0AA0	Siemens
T1.99	200010269	ESIA4393	1	=ES+S/115.4	Pulse generator report	für Micromaster 4	6SE6400-0EN00-0AA0	Siemens
T1.99	200010333	ESIA7047	1	=ES+S/115.0	Profibus plug	gerade / Schneidklemmen	6GK 1500-0FC00	Siemens
T1.99	200011393	ESIZ2401	1	=ES+S/115.0	Screen connection record	MICRO MASTER 420	6SE6400-0GP00-0BA0	Siemens
T1.101	200030070	ESIA4307-N	1	=ES+S/117.0	frequency converter	MM440 380-480V / 7,5 KW	6SE 6440-2UD27-5CA1	Siemens
T1.101	200010198	ESIA2400	1	=ES+S/117.0	operater panel	BOP für Micromaster 4	6SE6400-0BP00-0AA0	Siemens
T1.101	200010268	ESIA4392	1	=ES+S/117.0	profibus module	für Micromaster 440	6SE6400-1PB00-0AA0	Siemens
T1.101	200010269	ESIA4393	1	=ES+S/117.4	Pulse generator report	für Micromaster 4	6SE6400-0EN00-0AA0	Siemens
T1.101	200010333	ESIA7047	1	=ES+S/117.0	Profibus plug	gerade / Schneidklemmen	6GK 1500-0FC00	Siemens
T1.101	200011394	ESIZ2402	1	=ES+S/117.0	Screen connection record	für MICRO MASTER 420	6SE6400-0GP00-0CA0	Siemens
T1.102	200030070	ESIA4307-N	1	=ES+S/118.0	frequency converter	MM440 380-480V / 7,5 KW	6SE 6440-2UD27-5CA1	Siemens
T1.102	200010198	ESIA2400	1	=ES+S/118.0	operater panel	BOP für Micromaster 4	6SE6400-0BP00-0AA0	Siemens
T1.102	200010268	ESIA4392	1	=ES+S/118.0	profibus module	für Micromaster 440	6SE6400-1PB00-0AA0	Siemens
T1.102	200010269	ESIA4393	1	=ES+S/118.4	Pulse generator report	für Micromaster 4	6SE6400-0EN00-0AA0	Siemens
T1.102	200010333	ESIA7047	1	=ES+S/118.0	Profibus plug	gerade / Schneidklemmen	6GK 1500-0FC00	Siemens
T1.102	200011394	ESIZ2402	1	=ES+S/118.0	Screen connection record	für MICRO MASTER 420	6SE6400-0GP00-0CA0	Siemens
T2.1	200030071	ESIA4302-N	1	=ES+S/119.0	frequency converter	MM440 380-480V / 2,2 KW	6SE 6440-2UD22-2BA1	Siemens
T2.1	200010198	ESIA2400	1	=ES+S/119.0	operater panel	BOP für Micromaster 4	6SE6400-0BP00-0AA0	Siemens
T2.1	200010268	ESIA4392	1	=ES+S/119.0	profibus module	für Micromaster 440	6SE6400-1PB00-0AA0	Siemens
T2.1	200010269	ESIA4393	1	=ES+S/119.4	Pulse generator report	für Micromaster 4	6SE6400-0EN00-0AA0	Siemens
T2.1	200010333	ESIA7047	1	=ES+S/119.0	Profibus plug	gerade / Schneidklemmen	6GK 1500-0FC00	Siemens
T2.1	200011393	ESIZ2401	1	=ES+S/119.0	Screen connection record	MICRO MASTER 420	6SE6400-0GP00-0BA0	Siemens
T2.2	200030071	ESIA4302-N	1	=ES+S/120.0	frequency converter	MM440 380-480V / 2,2 KW	6SE 6440-2UD22-2BA1	Siemens
T2.2	200010198	ESIA2400	1	=ES+S/120.0	operater panel	BOP für Micromaster 4	6SE6400-0BP00-0AA0	Siemens
T2.2	200010268	ESIA4392	1	=ES+S/120.0	profibus module	für Micromaster 440	6SE6400-1PB00-0AA0	Siemens
T2.2	200010269	ESIA4393	1	=ES+S/120.4	Pulse generator report	für Micromaster 4	6SE6400-0EN00-0AA0	Siemens
T2.2	200010333	ESIA7047	1	=ES+S/120.0	Profibus plug	gerade / Schneidklemmen	6GK 1500-0FC00	Siemens
T2.2	200011393	ESIZ2401	1	=ES+S/120.0	Screen connection record	MICRO MASTER 420	6SE6400-0GP00-0BA0	Siemens
T2.3	200030071	ESIA4302-N	1	=ES+S/121.0	frequency converter	MM440 380-480V / 2,2 KW	6SE 6440-2UD22-2BA1	Siemens
T2.3	200010198	ESIA2400	1	=ES+S/121.0	operater panel	BOP für Micromaster 4	6SE6400-0BP00-0AA0	Siemens
T2.3	200010268	ESIA4392	1	=ES+S/121.0	profibus module	für Micromaster 440	6SE6400-1PB00-0AA0	Siemens
T2.3	200010269	ESIA4393	1	=ES+S/121.4	Pulse generator report	für Micromaster 4	6SE6400-0EN00-0AA0	Siemens

Parts list

electrical construction

Artilelstückliste_Elo_SAP_001

DT	Part number new	Part number old	Quantity	Placement	Designation 1	Designation 2	Order number	Manufacturer
T2.3	200010333	ESIA7047	1	=ES+S/121.0	Profibus plug	gerade / Schneidklemmen	6GK 1500-0FC00	Siemens
T2.3	200011393	ESIZ2401	1	=ES+S/121.0	Screen connection record	MICRO MASTER 420	6SE6400-0GP00-0BA0	Siemens
T2.4	200030071	ESIA4302-N	1	=ES+S/122.0	frequency converter	MM440 380-480V / 2,2 KW	6SE 6440-2UD22-2BA1	Siemens
T2.4	200010198	ESIA2400	1	=ES+S/122.0	operater panel	BOP für Micromaster 4	6SE6400-0BP00-0AA0	Siemens
T2.4	200010268	ESIA4392	1	=ES+S/122.0	profibus module	für Micromaster 440	6SE6400-1PB00-0AA0	Siemens
T2.4	200010269	ESIA4393	1	=ES+S/122.4	Pulse generator report	für Micromaster 4	6SE6400-0EN00-0AA0	Siemens
T2.4	200010333	ESIA7047	1	=ES+S/122.0	Profibus plug	gerade / Schneidklemmen	6GK 1500-0FC00	Siemens
T2.4	200011393	ESIZ2401	1	=ES+S/122.0	Screen connection record	MICRO MASTER 420	6SE6400-0GP00-0BA0	Siemens
T2.5	200030071	ESIA4302-N	1	=ES+S/123.0	frequency converter	MM440 380-480V / 2,2 KW	6SE 6440-2UD22-2BA1	Siemens
T2.5	200010198	ESIA2400	1	=ES+S/123.0	operater panel	BOP für Micromaster 4	6SE6400-0BP00-0AA0	Siemens
T2.5	200010268	ESIA4392	1	=ES+S/123.0	profibus module	für Micromaster 440	6SE6400-1PB00-0AA0	Siemens
T2.5	200010269	ESIA4393	1	=ES+S/123.4	Pulse generator report	für Micromaster 4	6SE6400-0EN00-0AA0	Siemens
T2.5	200010333	ESIA7047	1	=ES+S/123.0	Profibus plug	gerade / Schneidklemmen	6GK 1500-0FC00	Siemens
T2.5	200011393	ESIZ2401	1	=ES+S/123.0	Screen connection record	MICRO MASTER 420	6SE6400-0GP00-0BA0	Siemens
T2.6	200030071	ESIA4302-N	1	=ES+S/125.0	frequency converter	MM440 380-480V / 2,2 KW	6SE 6440-2UD22-2BA1	Siemens
T2.6	200010198	ESIA2400	1	=ES+S/125.0	operater panel	BOP für Micromaster 4	6SE6400-0BP00-0AA0	Siemens
T2.6	200010268	ESIA4392	1	=ES+S/125.0	profibus module	für Micromaster 440	6SE6400-1PB00-0AA0	Siemens
T2.6	200010269	ESIA4393	1	=ES+S/125.4	Pulse generator report	für Micromaster 4	6SE6400-0EN00-0AA0	Siemens
T2.6	200010333	ESIA7047	1	=ES+S/125.0	Profibus plug	gerade / Schneidklemmen	6GK 1500-0FC00	Siemens
T2.6	200011393	ESIZ2401	1	=ES+S/125.0	Screen connection record	MICRO MASTER 420	6SE6400-0GP00-0BA0	Siemens
T2.7	200030071	ESIA4302-N	1	=ES+S/126.0	frequency converter	MM440 380-480V / 2,2 KW	6SE 6440-2UD22-2BA1	Siemens
T2.7	200010198	ESIA2400	1	=ES+S/126.0	operater panel	BOP für Micromaster 4	6SE6400-0BP00-0AA0	Siemens
T2.7	200010268	ESIA4392	1	=ES+S/126.0	profibus module	für Micromaster 440	6SE6400-1PB00-0AA0	Siemens
T2.7	200010269	ESIA4393	1	=ES+S/126.4	Pulse generator report	für Micromaster 4	6SE6400-0EN00-0AA0	Siemens
T2.7	200010333	ESIA7047	1	=ES+S/126.0	Profibus plug	gerade / Schneidklemmen	6GK 1500-0FC00	Siemens
T2.7	200011393	ESIZ2401	1	=ES+S/126.0	Screen connection record	MICRO MASTER 420	6SE6400-0GP00-0BA0	Siemens
T2.8	200030071	ESIA4302-N	1	=ES+S/127.0	frequency converter	MM440 380-480V / 2,2 KW	6SE 6440-2UD22-2BA1	Siemens
T2.8	200010198	ESIA2400	1	=ES+S/127.0	operater panel	BOP für Micromaster 4	6SE6400-0BP00-0AA0	Siemens
T2.8	200010268	ESIA4392	1	=ES+S/127.0	profibus module	für Micromaster 440	6SE6400-1PB00-0AA0	Siemens
T2.8	200010269	ESIA4393	1	=ES+S/127.4	Pulse generator report	für Micromaster 4	6SE6400-0EN00-0AA0	Siemens
T2.8	200010333	ESIA7047	1	=ES+S/127.0	Profibus plug	gerade / Schneidklemmen	6GK 1500-0FC00	Siemens
T2.8	200011393	ESIZ2401	1	=ES+S/127.0	Screen connection record	MICRO MASTER 420	6SE6400-0GP00-0BA0	Siemens
T2.9	200030071	ESIA4302-N	1	=ES+S/128.0	frequency converter	MM440 380-480V / 2,2 KW	6SE 6440-2UD22-2BA1	Siemens
T2.9	200010198	ESIA2400	1	=ES+S/128.0	operater panel	BOP für Micromaster 4	6SE6400-0BP00-0AA0	Siemens
T2.9	200010268	ESIA4392	1	=ES+S/128.0	profibus module	für Micromaster 440	6SE6400-1PB00-0AA0	Siemens
T2.9	200010269	ESIA4393	1	=ES+S/128.4	Pulse generator report	für Micromaster 4	6SE6400-0EN00-0AA0	Siemens
T2.9	200010333	ESIA7047	1	=ES+S/128.0	Profibus plug	gerade / Schneidklemmen	6GK 1500-0FC00	Siemens
T2.9	200011393	ESIZ2401	1	=ES+S/128.0	Screen connection record	MICRO MASTER 420	6SE6400-0GP00-0BA0	Siemens

Parts list

electrical construction

Artilelstückliste_Elo_SAP_001

DT	Part number new	Part number old	Quantity	Placement	Designation 1	Designation 2	Order number	Manufacturer
T2.10	200030071	ESIA4302-N	1	=ES+S/129.0	frequency converter	MM440 380-480V / 2,2 KW	6SE 6440-2UD22-2BA1	Siemens
T2.10	200010198	ESIA2400	1	=ES+S/129.0	operater panel	BOP für Micromaster 4	6SE6400-0BP00-0AA0	Siemens
T2.10	200010268	ESIA4392	1	=ES+S/129.0	profibus module	für Micromaster 440	6SE6400-1PB00-0AA0	Siemens
T2.10	200010269	ESIA4393	1	=ES+S/129.4	Pulse generator report	für Micromaster 4	6SE6400-0EN00-0AA0	Siemens
T2.10	200010333	ESIA7047	1	=ES+S/129.0	Profibus plug	gerade / Schneidklemmen	6GK 1500-0FC00	Siemens
T2.10	200011393	ESIZ2401	1	=ES+S/129.0	Screen connection record	MICRO MASTER 420	6SE6400-0GP00-0BA0	Siemens
T2.11	200030071	ESIA4302-N	1	=ES+S/133.0	frequency converter	MM440 380-480V / 2,2 KW	6SE 6440-2UD22-2BA1	Siemens
T2.11	200010198	ESIA2400	1	=ES+S/133.0	operater panel	BOP für Micromaster 4	6SE6400-0BP00-0AA0	Siemens
T2.11	200010268	ESIA4392	1	=ES+S/133.0	profibus module	für Micromaster 440	6SE6400-1PB00-0AA0	Siemens
T2.11	200010269	ESIA4393	1	=ES+S/133.4	Pulse generator report	für Micromaster 4	6SE6400-0EN00-0AA0	Siemens
T2.11	200010333	ESIA7047	1	=ES+S/133.0	Profibus plug	gerade / Schneidklemmen	6GK 1500-0FC00	Siemens
T2.11	200011393	ESIZ2401	1	=ES+S/133.0	Screen connection record	MICRO MASTER 420	6SE6400-0GP00-0BA0	Siemens
T2.12	200030071	ESIA4302-N	1	=ES+S/134.0	frequency converter	MM440 380-480V / 2,2 KW	6SE 6440-2UD22-2BA1	Siemens
T2.12	200010198	ESIA2400	1	=ES+S/134.0	operater panel	BOP für Micromaster 4	6SE6400-0BP00-0AA0	Siemens
T2.12	200010268	ESIA4392	1	=ES+S/134.0	profibus module	für Micromaster 440	6SE6400-1PB00-0AA0	Siemens
T2.12	200010269	ESIA4393	1	=ES+S/134.4	Pulse generator report	für Micromaster 4	6SE6400-0EN00-0AA0	Siemens
T2.12	200010333	ESIA7047	1	=ES+S/134.0	Profibus plug	gerade / Schneidklemmen	6GK 1500-0FC00	Siemens
T2.12	200011393	ESIZ2401	1	=ES+S/134.0	Screen connection record	MICRO MASTER 420	6SE6400-0GP00-0BA0	Siemens
T2.13	200030071	ESIA4302-N	1	=ES+S/135.0	frequency converter	MM440 380-480V / 2,2 KW	6SE 6440-2UD22-2BA1	Siemens
T2.13	200010198	ESIA2400	1	=ES+S/135.0	operater panel	BOP für Micromaster 4	6SE6400-0BP00-0AA0	Siemens
T2.13	200010268	ESIA4392	1	=ES+S/135.0	profibus module	für Micromaster 440	6SE6400-1PB00-0AA0	Siemens
T2.13	200010269	ESIA4393	1	=ES+S/135.4	Pulse generator report	für Micromaster 4	6SE6400-0EN00-0AA0	Siemens
T2.13	200010333	ESIA7047	1	=ES+S/135.0	Profibus plug	gerade / Schneidklemmen	6GK 1500-0FC00	Siemens
T2.13	200011393	ESIZ2401	1	=ES+S/135.0	Screen connection record	MICRO MASTER 420	6SE6400-0GP00-0BA0	Siemens
T2.14	200030071	ESIA4302-N	1	=ES+S/136.0	frequency converter	MM440 380-480V / 2,2 KW	6SE 6440-2UD22-2BA1	Siemens
T2.14	200010198	ESIA2400	1	=ES+S/136.0	operater panel	BOP für Micromaster 4	6SE6400-0BP00-0AA0	Siemens
T2.14	200010268	ESIA4392	1	=ES+S/136.0	profibus module	für Micromaster 440	6SE6400-1PB00-0AA0	Siemens
T2.14	200010269	ESIA4393	1	=ES+S/136.4	Pulse generator report	für Micromaster 4	6SE6400-0EN00-0AA0	Siemens
T2.14	200010333	ESIA7047	1	=ES+S/136.0	Profibus plug	gerade / Schneidklemmen	6GK 1500-0FC00	Siemens
T2.14	200011393	ESIZ2401	1	=ES+S/136.0	Screen connection record	MICRO MASTER 420	6SE6400-0GP00-0BA0	Siemens
T2.15	200030071	ESIA4302-N	1	=ES+S/137.0	frequency converter	MM440 380-480V / 2,2 KW	6SE 6440-2UD22-2BA1	Siemens
T2.15	200010198	ESIA2400	1	=ES+S/137.0	operater panel	BOP für Micromaster 4	6SE6400-0BP00-0AA0	Siemens
T2.15	200010268	ESIA4392	1	=ES+S/137.0	profibus module	für Micromaster 440	6SE6400-1PB00-0AA0	Siemens
T2.15	200010269	ESIA4393	1	=ES+S/137.4	Pulse generator report	für Micromaster 4	6SE6400-0EN00-0AA0	Siemens
T2.15	200010333	ESIA7047	1	=ES+S/137.0	Profibus plug	gerade / Schneidklemmen	6GK 1500-0FC00	Siemens
T2.15	200011393	ESIZ2401	1	=ES+S/137.0	Screen connection record	MICRO MASTER 420	6SE6400-0GP00-0BA0	Siemens
T2.16	200030071	ESIA4302-N	1	=ES+S/138.0	frequency converter	MM440 380-480V / 2,2 KW	6SE 6440-2UD22-2BA1	Siemens
T2.16	200010198	ESIA2400	1	=ES+S/138.0	operater panel	BOP für Micromaster 4	6SE6400-0BP00-0AA0	Siemens

Parts list

electrical construction

Artilelstückliste_Elo_SAP_001

DT	Part number new	Part number old	Quantity	Placement	Designation 1	Designation 2	Order number	Manufacturer
T2.16	200010268	ESIA4392	1	=ES+S/138.0	profibus module	für Micromaster 440	6SE6400-1PB00-0AA0	Siemens
T2.16	200010269	ESIA4393	1	=ES+S/138.4	Pulse generator report	für Micromaster 4	6SE6400-0EN00-0AA0	Siemens
T2.16	200010333	ESIA7047	1	=ES+S/138.0	Profibus plug	gerade / Schneidklemmen	6GK 1500-0FC00	Siemens
T2.16	200011393	ESIZ2401	1	=ES+S/138.0	Screen connection record	MICRO MASTER 420	6SE6400-0GP00-0BA0	Siemens
T2.17	200030071	ESIA4302-N	1	=ES+S/140.0	frequency converter	MM440 380-480V / 2,2 KW	6SE 6440-2UD22-2BA1	Siemens
T2.17	200010198	ESIA2400	1	=ES+S/140.0	operater panel	BOP für Micromaster 4	6SE6400-0BP00-0AA0	Siemens
T2.17	200010268	ESIA4392	1	=ES+S/140.0	profibus module	für Micromaster 440	6SE6400-1PB00-0AA0	Siemens
T2.17	200010269	ESIA4393	1	=ES+S/140.4	Pulse generator report	für Micromaster 4	6SE6400-0EN00-0AA0	Siemens
T2.17	200010333	ESIA7047	1	=ES+S/140.0	Profibus plug	gerade / Schneidklemmen	6GK 1500-0FC00	Siemens
T2.17	200011393	ESIZ2401	1	=ES+S/140.0	Screen connection record	MICRO MASTER 420	6SE6400-0GP00-0BA0	Siemens
T2.18	200030071	ESIA4302-N	1	=ES+S/141.0	frequency converter	MM440 380-480V / 2,2 KW	6SE 6440-2UD22-2BA1	Siemens
T2.18	200010198	ESIA2400	1	=ES+S/141.0	operater panel	BOP für Micromaster 4	6SE6400-0BP00-0AA0	Siemens
T2.18	200010268	ESIA4392	1	=ES+S/141.0	profibus module	für Micromaster 440	6SE6400-1PB00-0AA0	Siemens
T2.18	200010269	ESIA4393	1	=ES+S/141.4	Pulse generator report	für Micromaster 4	6SE6400-0EN00-0AA0	Siemens
T2.18	200010333	ESIA7047	1	=ES+S/141.0	Profibus plug	gerade / Schneidklemmen	6GK 1500-0FC00	Siemens
T2.18	200011393	ESIZ2401	1	=ES+S/141.0	Screen connection record	MICRO MASTER 420	6SE6400-0GP00-0BA0	Siemens
T2.19	200030071	ESIA4302-N	1	=ES+S/142.0	frequency converter	MM440 380-480V / 2,2 KW	6SE 6440-2UD22-2BA1	Siemens
T2.19	200010198	ESIA2400	1	=ES+S/142.0	operater panel	BOP für Micromaster 4	6SE6400-0BP00-0AA0	Siemens
T2.19	200010268	ESIA4392	1	=ES+S/142.0	profibus module	für Micromaster 440	6SE6400-1PB00-0AA0	Siemens
T2.19	200010269	ESIA4393	1	=ES+S/142.4	Pulse generator report	für Micromaster 4	6SE6400-0EN00-0AA0	Siemens
T2.19	200010333	ESIA7047	1	=ES+S/142.0	Profibus plug	gerade / Schneidklemmen	6GK 1500-0FC00	Siemens
T2.19	200011393	ESIZ2401	1	=ES+S/142.0	Screen connection record	MICRO MASTER 420	6SE6400-0GP00-0BA0	Siemens
T2.20	200030071	ESIA4302-N	1	=ES+S/143.0	frequency converter	MM440 380-480V / 2,2 KW	6SE 6440-2UD22-2BA1	Siemens
T2.20	200010198	ESIA2400	1	=ES+S/143.0	operater panel	BOP für Micromaster 4	6SE6400-0BP00-0AA0	Siemens
T2.20	200010268	ESIA4392	1	=ES+S/143.0	profibus module	für Micromaster 440	6SE6400-1PB00-0AA0	Siemens
T2.20	200010269	ESIA4393	1	=ES+S/143.4	Pulse generator report	für Micromaster 4	6SE6400-0EN00-0AA0	Siemens
T2.20	200010333	ESIA7047	1	=ES+S/143.0	Profibus plug	gerade / Schneidklemmen	6GK 1500-0FC00	Siemens
T2.20	200011393	ESIZ2401	1	=ES+S/143.0	Screen connection record	MICRO MASTER 420	6SE6400-0GP00-0BA0	Siemens
T2.21	200030071	ESIA4302-N	1	=ES+S/144.0	frequency converter	MM440 380-480V / 2,2 KW	6SE 6440-2UD22-2BA1	Siemens
T2.21	200010198	ESIA2400	1	=ES+S/144.0	operater panel	BOP für Micromaster 4	6SE6400-0BP00-0AA0	Siemens
T2.21	200010268	ESIA4392	1	=ES+S/144.0	profibus module	für Micromaster 440	6SE6400-1PB00-0AA0	Siemens
T2.21	200010269	ESIA4393	1	=ES+S/144.4	Pulse generator report	für Micromaster 4	6SE6400-0EN00-0AA0	Siemens
T2.21	200010333	ESIA7047	1	=ES+S/144.0	Profibus plug	gerade / Schneidklemmen	6GK 1500-0FC00	Siemens
T2.21	200011393	ESIZ2401	1	=ES+S/144.0	Screen connection record	MICRO MASTER 420	6SE6400-0GP00-0BA0	Siemens
T2.22	200030071	ESIA4302-N	1	=ES+S/145.0	frequency converter	MM440 380-480V / 2,2 KW	6SE 6440-2UD22-2BA1	Siemens
T2.22	200010198	ESIA2400	1	=ES+S/145.0	operater panel	BOP für Micromaster 4	6SE6400-0BP00-0AA0	Siemens
T2.22	200010268	ESIA4392	1	=ES+S/145.0	profibus module	für Micromaster 440	6SE6400-1PB00-0AA0	Siemens
T2.22	200010269	ESIA4393	1	=ES+S/145.4	Pulse generator report	für Micromaster 4	6SE6400-0EN00-0AA0	Siemens

Parts list

electrical construction

Artilelstückliste_Elo_SAP_001

DT	Part number new	Part number old	Quantity	Placement	Designation 1	Designation 2	Order number	Manufacturer
T2.22	200010333	ESIA7047	1	=ES+S/145.0	Profibus plug	gerade / Schneidklemmen	6GK 1500-0FC00	Siemens
T2.22	200011393	ESIZ2401	1	=ES+S/145.0	Screen connection record	MICRO MASTER 420	6SE6400-0GP00-0BA0	Siemens
T2.23	200030071	ESIA4302-N	1	=ES+S/147.0	frequency converter	MM440 380-480V / 2,2 KW	6SE 6440-2UD22-2BA1	Siemens
T2.23	200010198	ESIA2400	1	=ES+S/147.0	operater panel	BOP für Micromaster 4	6SE6400-0BP00-0AA0	Siemens
T2.23	200010268	ESIA4392	1	=ES+S/147.0	profibus module	für Micromaster 440	6SE6400-1PB00-0AA0	Siemens
T2.23	200010269	ESIA4393	1	=ES+S/147.4	Pulse generator report	für Micromaster 4	6SE6400-0EN00-0AA0	Siemens
T2.23	200010333	ESIA7047	1	=ES+S/147.0	Profibus plug	gerade / Schneidklemmen	6GK 1500-0FC00	Siemens
T2.23	200011393	ESIZ2401	1	=ES+S/147.0	Screen connection record	MICRO MASTER 420	6SE6400-0GP00-0BA0	Siemens
T2.24	200030071	ESIA4302-N	1	=ES+S/148.0	frequency converter	MM440 380-480V / 2,2 KW	6SE 6440-2UD22-2BA1	Siemens
T2.24	200010198	ESIA2400	1	=ES+S/148.0	operater panel	BOP für Micromaster 4	6SE6400-0BP00-0AA0	Siemens
T2.24	200010268	ESIA4392	1	=ES+S/148.0	profibus module	für Micromaster 440	6SE6400-1PB00-0AA0	Siemens
T2.24	200010269	ESIA4393	1	=ES+S/148.4	Pulse generator report	für Micromaster 4	6SE6400-0EN00-0AA0	Siemens
T2.24	200010333	ESIA7047	1	=ES+S/148.0	Profibus plug	gerade / Schneidklemmen	6GK 1500-0FC00	Siemens
T2.24	200011393	ESIZ2401	1	=ES+S/148.0	Screen connection record	MICRO MASTER 420	6SE6400-0GP00-0BA0	Siemens
T2.25	200030071	ESIA4302-N	1	=ES+S/149.0	frequency converter	MM440 380-480V / 2,2 KW	6SE 6440-2UD22-2BA1	Siemens
T2.25	200010198	ESIA2400	1	=ES+S/149.0	operater panel	BOP für Micromaster 4	6SE6400-0BP00-0AA0	Siemens
T2.25	200010268	ESIA4392	1	=ES+S/149.0	profibus module	für Micromaster 440	6SE6400-1PB00-0AA0	Siemens
T2.25	200010269	ESIA4393	1	=ES+S/149.4	Pulse generator report	für Micromaster 4	6SE6400-0EN00-0AA0	Siemens
T2.25	200010333	ESIA7047	1	=ES+S/149.0	Profibus plug	gerade / Schneidklemmen	6GK 1500-0FC00	Siemens
T2.25	200011393	ESIZ2401	1	=ES+S/149.0	Screen connection record	MICRO MASTER 420	6SE6400-0GP00-0BA0	Siemens
T2.26	200030071	ESIA4302-N	1	=ES+S/150.0	frequency converter	MM440 380-480V / 2,2 KW	6SE 6440-2UD22-2BA1	Siemens
T2.26	200010198	ESIA2400	1	=ES+S/150.0	operater panel	BOP für Micromaster 4	6SE6400-0BP00-0AA0	Siemens
T2.26	200010268	ESIA4392	1	=ES+S/150.0	profibus module	für Micromaster 440	6SE6400-1PB00-0AA0	Siemens
T2.26	200010269	ESIA4393	1	=ES+S/150.4	Pulse generator report	für Micromaster 4	6SE6400-0EN00-0AA0	Siemens
T2.26	200010333	ESIA7047	1	=ES+S/150.0	Profibus plug	gerade / Schneidklemmen	6GK 1500-0FC00	Siemens
T2.26	200011393	ESIZ2401	1	=ES+S/150.0	Screen connection record	MICRO MASTER 420	6SE6400-0GP00-0BA0	Siemens
T2.27	200030071	ESIA4302-N	1	=ES+S/151.0	frequency converter	MM440 380-480V / 2,2 KW	6SE 6440-2UD22-2BA1	Siemens
T2.27	200010198	ESIA2400	1	=ES+S/151.0	operater panel	BOP für Micromaster 4	6SE6400-0BP00-0AA0	Siemens
T2.27	200010268	ESIA4392	1	=ES+S/151.0	profibus module	für Micromaster 440	6SE6400-1PB00-0AA0	Siemens
T2.27	200010269	ESIA4393	1	=ES+S/151.4	Pulse generator report	für Micromaster 4	6SE6400-0EN00-0AA0	Siemens
T2.27	200010333	ESIA7047	1	=ES+S/151.0	Profibus plug	gerade / Schneidklemmen	6GK 1500-0FC00	Siemens
T2.27	200011393	ESIZ2401	1	=ES+S/151.0	Screen connection record	MICRO MASTER 420	6SE6400-0GP00-0BA0	Siemens
T2.28	200030071	ESIA4302-N	1	=ES+S/152.0	frequency converter	MM440 380-480V / 2,2 KW	6SE 6440-2UD22-2BA1	Siemens
T2.28	200010198	ESIA2400	1	=ES+S/152.0	operater panel	BOP für Micromaster 4	6SE6400-0BP00-0AA0	Siemens
T2.28	200010268	ESIA4392	1	=ES+S/152.0	profibus module	für Micromaster 440	6SE6400-1PB00-0AA0	Siemens
T2.28	200010269	ESIA4393	1	=ES+S/152.4	Pulse generator report	für Micromaster 4	6SE6400-0EN00-0AA0	Siemens
T2.28	200010333	ESIA7047	1	=ES+S/152.0	Profibus plug	gerade / Schneidklemmen	6GK 1500-0FC00	Siemens
T2.28	200011393	ESIZ2401	1	=ES+S/152.0	Screen connection record	MICRO MASTER 420	6SE6400-0GP00-0BA0	Siemens

Parts list

electrical construction

Artilelstückliste_Elo_SAP_001

DT	Part number new	Part number old	Quantity	Placement	Designation 1	Designation 2	Order number	Manufacturer
T2.29	200030071	ESIA4302-N	1	=ES+S/154.0	frequency converter	MM440 380-480V / 2,2 KW	6SE 6440-2UD22-2BA1	Siemens
T2.29	200010198	ESIA2400	1	=ES+S/154.0	operater panel	BOP für Micromaster 4	6SE6400-0BP00-0AA0	Siemens
T2.29	200010268	ESIA4392	1	=ES+S/154.0	profibus module	für Micromaster 440	6SE6400-1PB00-0AA0	Siemens
T2.29	200010269	ESIA4393	1	=ES+S/154.4	Pulse generator report	für Micromaster 4	6SE6400-0EN00-0AA0	Siemens
T2.29	200010333	ESIA7047	1	=ES+S/154.0	Profibus plug	gerade / Schneidklemmen	6GK 1500-0FC00	Siemens
T2.29	200011393	ESIZ2401	1	=ES+S/154.0	Screen connection record	MICRO MASTER 420	6SE6400-0GP00-0BA0	Siemens
T2.30	200030071	ESIA4302-N	1	=ES+S/155.0	frequency converter	MM440 380-480V / 2,2 KW	6SE 6440-2UD22-2BA1	Siemens
T2.30	200010198	ESIA2400	1	=ES+S/155.0	operater panel	BOP für Micromaster 4	6SE6400-0BP00-0AA0	Siemens
T2.30	200010268	ESIA4392	1	=ES+S/155.0	profibus module	für Micromaster 440	6SE6400-1PB00-0AA0	Siemens
T2.30	200010269	ESIA4393	1	=ES+S/155.4	Pulse generator report	für Micromaster 4	6SE6400-0EN00-0AA0	Siemens
T2.30	200010333	ESIA7047	1	=ES+S/155.0	Profibus plug	gerade / Schneidklemmen	6GK 1500-0FC00	Siemens
T2.30	200011393	ESIZ2401	1	=ES+S/155.0	Screen connection record	MICRO MASTER 420	6SE6400-0GP00-0BA0	Siemens
T2.31	200030071	ESIA4302-N	1	=ES+S/156.0	frequency converter	MM440 380-480V / 2,2 KW	6SE 6440-2UD22-2BA1	Siemens
T2.31	200010198	ESIA2400	1	=ES+S/156.0	operater panel	BOP für Micromaster 4	6SE6400-0BP00-0AA0	Siemens
T2.31	200010268	ESIA4392	1	=ES+S/156.0	profibus module	für Micromaster 440	6SE6400-1PB00-0AA0	Siemens
T2.31	200010269	ESIA4393	1	=ES+S/156.4	Pulse generator report	für Micromaster 4	6SE6400-0EN00-0AA0	Siemens
T2.31	200010333	ESIA7047	1	=ES+S/156.0	Profibus plug	gerade / Schneidklemmen	6GK 1500-0FC00	Siemens
T2.31	200011393	ESIZ2401	1	=ES+S/156.0	Screen connection record	MICRO MASTER 420	6SE6400-0GP00-0BA0	Siemens
T2.32	200030071	ESIA4302-N	1	=ES+S/157.0	frequency converter	MM440 380-480V / 2,2 KW	6SE 6440-2UD22-2BA1	Siemens
T2.32	200010198	ESIA2400	1	=ES+S/157.0	operater panel	BOP für Micromaster 4	6SE6400-0BP00-0AA0	Siemens
T2.32	200010268	ESIA4392	1	=ES+S/157.0	profibus module	für Micromaster 440	6SE6400-1PB00-0AA0	Siemens
T2.32	200010269	ESIA4393	1	=ES+S/157.4	Pulse generator report	für Micromaster 4	6SE6400-0EN00-0AA0	Siemens
T2.32	200010333	ESIA7047	1	=ES+S/157.0	Profibus plug	gerade / Schneidklemmen	6GK 1500-0FC00	Siemens
T2.32	200011393	ESIZ2401	1	=ES+S/157.0	Screen connection record	MICRO MASTER 420	6SE6400-0GP00-0BA0	Siemens
T2.33	200030071	ESIA4302-N	1	=ES+S/158.0	frequency converter	MM440 380-480V / 2,2 KW	6SE 6440-2UD22-2BA1	Siemens
T2.33	200010198	ESIA2400	1	=ES+S/158.0	operater panel	BOP für Micromaster 4	6SE6400-0BP00-0AA0	Siemens
T2.33	200010268	ESIA4392	1	=ES+S/158.0	profibus module	für Micromaster 440	6SE6400-1PB00-0AA0	Siemens
T2.33	200010269	ESIA4393	1	=ES+S/158.4	Pulse generator report	für Micromaster 4	6SE6400-0EN00-0AA0	Siemens
T2.33	200010333	ESIA7047	1	=ES+S/158.0	Profibus plug	gerade / Schneidklemmen	6GK 1500-0FC00	Siemens
T2.33	200011393	ESIZ2401	1	=ES+S/158.0	Screen connection record	MICRO MASTER 420	6SE6400-0GP00-0BA0	Siemens
T2.34	200030071	ESIA4302-N	1	=ES+S/159.0	frequency converter	MM440 380-480V / 2,2 KW	6SE 6440-2UD22-2BA1	Siemens
T2.34	200010198	ESIA2400	1	=ES+S/159.0	operater panel	BOP für Micromaster 4	6SE6400-0BP00-0AA0	Siemens
T2.34	200010268	ESIA4392	1	=ES+S/159.0	profibus module	für Micromaster 440	6SE6400-1PB00-0AA0	Siemens
T2.34	200010269	ESIA4393	1	=ES+S/159.4	Pulse generator report	für Micromaster 4	6SE6400-0EN00-0AA0	Siemens
T2.34	200010333	ESIA7047	1	=ES+S/159.0	Profibus plug	gerade / Schneidklemmen	6GK 1500-0FC00	Siemens
T2.34	200011393	ESIZ2401	1	=ES+S/159.0	Screen connection record	MICRO MASTER 420	6SE6400-0GP00-0BA0	Siemens
T2.35	200030071	ESIA4302-N	1	=ES+S/161.0	frequency converter	MM440 380-480V / 2,2 KW	6SE 6440-2UD22-2BA1	Siemens
T2.35	200010198	ESIA2400	1	=ES+S/161.0	operater panel	BOP für Micromaster 4	6SE6400-0BP00-0AA0	Siemens

Parts list

electrical construction

Artilelstückliste_Elo_SAP_001

DT	Part number new	Part number old	Quantity	Placement	Designation 1	Designation 2	Order number	Manufacturer
T2.35	200010268	ESIA4392	1	=ES+S/161.0	profibus module	für Micromaster 440	6SE6400-1PB00-0AA0	Siemens
T2.35	200010269	ESIA4393	1	=ES+S/161.4	Pulse generator report	für Micromaster 4	6SE6400-0EN00-0AA0	Siemens
T2.35	200010333	ESIA7047	1	=ES+S/161.0	Profibus plug	gerade / Schneidklemmen	6GK 1500-0FC00	Siemens
T2.35	200011393	ESIZ2401	1	=ES+S/161.0	Screen connection record	MICRO MASTER 420	6SE6400-0GP00-0BA0	Siemens
T2.36	200030071	ESIA4302-N	1	=ES+S/162.0	frequency converter	MM440 380-480V / 2,2 KW	6SE 6440-2UD22-2BA1	Siemens
T2.36	200010198	ESIA2400	1	=ES+S/162.0	operater panel	BOP für Micromaster 4	6SE6400-0BP00-0AA0	Siemens
T2.36	200010268	ESIA4392	1	=ES+S/162.0	profibus module	für Micromaster 440	6SE6400-1PB00-0AA0	Siemens
T2.36	200010269	ESIA4393	1	=ES+S/162.4	Pulse generator report	für Micromaster 4	6SE6400-0EN00-0AA0	Siemens
T2.36	200010333	ESIA7047	1	=ES+S/162.0	Profibus plug	gerade / Schneidklemmen	6GK 1500-0FC00	Siemens
T2.36	200011393	ESIZ2401	1	=ES+S/162.0	Screen connection record	MICRO MASTER 420	6SE6400-0GP00-0BA0	Siemens
T2.37	200030071	ESIA4302-N	1	=ES+S/163.0	frequency converter	MM440 380-480V / 2,2 KW	6SE 6440-2UD22-2BA1	Siemens
T2.37	200010198	ESIA2400	1	=ES+S/163.0	operater panel	BOP für Micromaster 4	6SE6400-0BP00-0AA0	Siemens
T2.37	200010268	ESIA4392	1	=ES+S/163.0	profibus module	für Micromaster 440	6SE6400-1PB00-0AA0	Siemens
T2.37	200010269	ESIA4393	1	=ES+S/163.4	Pulse generator report	für Micromaster 4	6SE6400-0EN00-0AA0	Siemens
T2.37	200010333	ESIA7047	1	=ES+S/163.0	Profibus plug	gerade / Schneidklemmen	6GK 1500-0FC00	Siemens
T2.37	200011393	ESIZ2401	1	=ES+S/163.0	Screen connection record	MICRO MASTER 420	6SE6400-0GP00-0BA0	Siemens
T2.38	200030071	ESIA4302-N	1	=ES+S/164.0	frequency converter	MM440 380-480V / 2,2 KW	6SE 6440-2UD22-2BA1	Siemens
T2.38	200010198	ESIA2400	1	=ES+S/164.0	operater panel	BOP für Micromaster 4	6SE6400-0BP00-0AA0	Siemens
T2.38	200010268	ESIA4392	1	=ES+S/164.0	profibus module	für Micromaster 440	6SE6400-1PB00-0AA0	Siemens
T2.38	200010269	ESIA4393	1	=ES+S/164.4	Pulse generator report	für Micromaster 4	6SE6400-0EN00-0AA0	Siemens
T2.38	200010333	ESIA7047	1	=ES+S/164.0	Profibus plug	gerade / Schneidklemmen	6GK 1500-0FC00	Siemens
T2.38	200011393	ESIZ2401	1	=ES+S/164.0	Screen connection record	MICRO MASTER 420	6SE6400-0GP00-0BA0	Siemens
T2.39	200030071	ESIA4302-N	1	=ES+S/165.0	frequency converter	MM440 380-480V / 2,2 KW	6SE 6440-2UD22-2BA1	Siemens
T2.39	200010198	ESIA2400	1	=ES+S/165.0	operater panel	BOP für Micromaster 4	6SE6400-0BP00-0AA0	Siemens
T2.39	200010268	ESIA4392	1	=ES+S/165.0	profibus module	für Micromaster 440	6SE6400-1PB00-0AA0	Siemens
T2.39	200010269	ESIA4393	1	=ES+S/165.4	Pulse generator report	für Micromaster 4	6SE6400-0EN00-0AA0	Siemens
T2.39	200010333	ESIA7047	1	=ES+S/165.0	Profibus plug	gerade / Schneidklemmen	6GK 1500-0FC00	Siemens
T2.39	200011393	ESIZ2401	1	=ES+S/165.0	Screen connection record	MICRO MASTER 420	6SE6400-0GP00-0BA0	Siemens
T2.40	200030071	ESIA4302-N	1	=ES+S/166.0	frequency converter	MM440 380-480V / 2,2 KW	6SE 6440-2UD22-2BA1	Siemens
T2.40	200010198	ESIA2400	1	=ES+S/166.0	operater panel	BOP für Micromaster 4	6SE6400-0BP00-0AA0	Siemens
T2.40	200010268	ESIA4392	1	=ES+S/166.0	profibus module	für Micromaster 440	6SE6400-1PB00-0AA0	Siemens
T2.40	200010269	ESIA4393	1	=ES+S/166.4	Pulse generator report	für Micromaster 4	6SE6400-0EN00-0AA0	Siemens
T2.40	200010333	ESIA7047	1	=ES+S/166.0	Profibus plug	gerade / Schneidklemmen	6GK 1500-0FC00	Siemens
T2.40	200011393	ESIZ2401	1	=ES+S/166.0	Screen connection record	MICRO MASTER 420	6SE6400-0GP00-0BA0	Siemens
T2.41	200030071	ESIA4302-N	1	=ES+S/168.0	frequency converter	MM440 380-480V / 2,2 KW	6SE 6440-2UD22-2BA1	Siemens
T2.41	200010198	ESIA2400	1	=ES+S/168.0	operater panel	BOP für Micromaster 4	6SE6400-0BP00-0AA0	Siemens
T2.41	200010268	ESIA4392	1	=ES+S/168.0	profibus module	für Micromaster 440	6SE6400-1PB00-0AA0	Siemens
T2.41	200010269	ESIA4393	1	=ES+S/168.4	Pulse generator report	für Micromaster 4	6SE6400-0EN00-0AA0	Siemens

Parts list

electrical construction

Artilelstückliste_Elo_SAP_001

DT	Part number new	Part number old	Quantity	Placement	Designation 1	Designation 2	Order number	Manufacturer
T2.41	200010333	ESIA7047	1	=ES+S/168.0	Profibus plug	gerade / Schneidklemmen	6GK 1500-0FC00	Siemens
T2.41	200011393	ESIZ2401	1	=ES+S/168.0	Screen connection record	MICRO MASTER 420	6SE6400-0GP00-0BA0	Siemens
T2.42	200030071	ESIA4302-N	1	=ES+S/169.0	frequency converter	MM440 380-480V / 2,2 KW	6SE 6440-2UD22-2BA1	Siemens
T2.42	200010198	ESIA2400	1	=ES+S/169.0	operater panel	BOP für Micromaster 4	6SE6400-0BP00-0AA0	Siemens
T2.42	200010268	ESIA4392	1	=ES+S/169.0	profibus module	für Micromaster 440	6SE6400-1PB00-0AA0	Siemens
T2.42	200010269	ESIA4393	1	=ES+S/169.4	Pulse generator report	für Micromaster 4	6SE6400-0EN00-0AA0	Siemens
T2.42	200010333	ESIA7047	1	=ES+S/169.0	Profibus plug	gerade / Schneidklemmen	6GK 1500-0FC00	Siemens
T2.42	200011393	ESIZ2401	1	=ES+S/169.0	Screen connection record	MICRO MASTER 420	6SE6400-0GP00-0BA0	Siemens
T2.43	200030071	ESIA4302-N	1	=ES+S/170.0	frequency converter	MM440 380-480V / 2,2 KW	6SE 6440-2UD22-2BA1	Siemens
T2.43	200010198	ESIA2400	1	=ES+S/170.0	operater panel	BOP für Micromaster 4	6SE6400-0BP00-0AA0	Siemens
T2.43	200010268	ESIA4392	1	=ES+S/170.0	profibus module	für Micromaster 440	6SE6400-1PB00-0AA0	Siemens
T2.43	200010269	ESIA4393	1	=ES+S/170.4	Pulse generator report	für Micromaster 4	6SE6400-0EN00-0AA0	Siemens
T2.43	200010333	ESIA7047	1	=ES+S/170.0	Profibus plug	gerade / Schneidklemmen	6GK 1500-0FC00	Siemens
T2.43	200011393	ESIZ2401	1	=ES+S/170.0	Screen connection record	MICRO MASTER 420	6SE6400-0GP00-0BA0	Siemens
T2.44	200030071	ESIA4302-N	1	=ES+S/171.0	frequency converter	MM440 380-480V / 2,2 KW	6SE 6440-2UD22-2BA1	Siemens
T2.44	200010198	ESIA2400	1	=ES+S/171.0	operater panel	BOP für Micromaster 4	6SE6400-0BP00-0AA0	Siemens
T2.44	200010268	ESIA4392	1	=ES+S/171.0	profibus module	für Micromaster 440	6SE6400-1PB00-0AA0	Siemens
T2.44	200010269	ESIA4393	1	=ES+S/171.4	Pulse generator report	für Micromaster 4	6SE6400-0EN00-0AA0	Siemens
T2.44	200010333	ESIA7047	1	=ES+S/171.0	Profibus plug	gerade / Schneidklemmen	6GK 1500-0FC00	Siemens
T2.44	200011393	ESIZ2401	1	=ES+S/171.0	Screen connection record	MICRO MASTER 420	6SE6400-0GP00-0BA0	Siemens
T2.45	200030071	ESIA4302-N	1	=ES+S/172.0	frequency converter	MM440 380-480V / 2,2 KW	6SE 6440-2UD22-2BA1	Siemens
T2.45	200010198	ESIA2400	1	=ES+S/172.0	operater panel	BOP für Micromaster 4	6SE6400-0BP00-0AA0	Siemens
T2.45	200010268	ESIA4392	1	=ES+S/172.0	profibus module	für Micromaster 440	6SE6400-1PB00-0AA0	Siemens
T2.45	200010269	ESIA4393	1	=ES+S/172.4	Pulse generator report	für Micromaster 4	6SE6400-0EN00-0AA0	Siemens
T2.45	200010333	ESIA7047	1	=ES+S/172.0	Profibus plug	gerade / Schneidklemmen	6GK 1500-0FC00	Siemens
T2.45	200011393	ESIZ2401	1	=ES+S/172.0	Screen connection record	MICRO MASTER 420	6SE6400-0GP00-0BA0	Siemens
T2.46	200030071	ESIA4302-N	1	=ES+S/173.0	frequency converter	MM440 380-480V / 2,2 KW	6SE 6440-2UD22-2BA1	Siemens
T2.46	200010198	ESIA2400	1	=ES+S/173.0	operater panel	BOP für Micromaster 4	6SE6400-0BP00-0AA0	Siemens
T2.46	200010268	ESIA4392	1	=ES+S/173.0	profibus module	für Micromaster 440	6SE6400-1PB00-0AA0	Siemens
T2.46	200010269	ESIA4393	1	=ES+S/173.4	Pulse generator report	für Micromaster 4	6SE6400-0EN00-0AA0	Siemens
T2.46	200010333	ESIA7047	1	=ES+S/173.0	Profibus plug	gerade / Schneidklemmen	6GK 1500-0FC00	Siemens
T2.46	200011393	ESIZ2401	1	=ES+S/173.0	Screen connection record	MICRO MASTER 420	6SE6400-0GP00-0BA0	Siemens
T2.47	200030071	ESIA4302-N	1	=ES+S/175.0	frequency converter	MM440 380-480V / 2,2 KW	6SE 6440-2UD22-2BA1	Siemens
T2.47	200010198	ESIA2400	1	=ES+S/175.0	operater panel	BOP für Micromaster 4	6SE6400-0BP00-0AA0	Siemens
T2.47	200010268	ESIA4392	1	=ES+S/175.0	profibus module	für Micromaster 440	6SE6400-1PB00-0AA0	Siemens
T2.47	200010269	ESIA4393	1	=ES+S/175.4	Pulse generator report	für Micromaster 4	6SE6400-0EN00-0AA0	Siemens
T2.47	200010333	ESIA7047	1	=ES+S/175.0	Profibus plug	gerade / Schneidklemmen	6GK 1500-0FC00	Siemens
T2.47	200011393	ESIZ2401	1	=ES+S/175.0	Screen connection record	MICRO MASTER 420	6SE6400-0GP00-0BA0	Siemens

Parts list

electrical construction

Artilelstückliste_Elo_SAP_001

DT	Part number new	Part number old	Quantity	Placement	Designation 1	Designation 2	Order number	Manufacturer
T2.48	200030071	ESIA4302-N	1	=ES+S/176.0	frequency converter	MM440 380-480V / 2,2 KW	6SE 6440-2UD22-2BA1	Siemens
T2.48	200010198	ESIA2400	1	=ES+S/176.0	operater panel	BOP für Micromaster 4	6SE6400-0BP00-0AA0	Siemens
T2.48	200010268	ESIA4392	1	=ES+S/176.0	profibus module	für Micromaster 440	6SE6400-1PB00-0AA0	Siemens
T2.48	200010269	ESIA4393	1	=ES+S/176.4	Pulse generator report	für Micromaster 4	6SE6400-0EN00-0AA0	Siemens
T2.48	200010333	ESIA7047	1	=ES+S/176.0	Profibus plug	gerade / Schneidklemmen	6GK 1500-0FC00	Siemens
T2.48	200011393	ESIZ2401	1	=ES+S/176.0	Screen connection record	MICRO MASTER 420	6SE6400-0GP00-0BA0	Siemens
T2.49	200030071	ESIA4302-N	1	=ES+S/177.0	frequency converter	MM440 380-480V / 2,2 KW	6SE 6440-2UD22-2BA1	Siemens
T2.49	200010198	ESIA2400	1	=ES+S/177.0	operater panel	BOP für Micromaster 4	6SE6400-0BP00-0AA0	Siemens
T2.49	200010268	ESIA4392	1	=ES+S/177.0	profibus module	für Micromaster 440	6SE6400-1PB00-0AA0	Siemens
T2.49	200010269	ESIA4393	1	=ES+S/177.4	Pulse generator report	für Micromaster 4	6SE6400-0EN00-0AA0	Siemens
T2.49	200010333	ESIA7047	1	=ES+S/177.0	Profibus plug	gerade / Schneidklemmen	6GK 1500-0FC00	Siemens
T2.49	200011393	ESIZ2401	1	=ES+S/177.0	Screen connection record	MICRO MASTER 420	6SE6400-0GP00-0BA0	Siemens
T2.50	200030071	ESIA4302-N	1	=ES+S/178.0	frequency converter	MM440 380-480V / 2,2 KW	6SE 6440-2UD22-2BA1	Siemens
T2.50	200010198	ESIA2400	1	=ES+S/178.0	operater panel	BOP für Micromaster 4	6SE6400-0BP00-0AA0	Siemens
T2.50	200010268	ESIA4392	1	=ES+S/178.0	profibus module	für Micromaster 440	6SE6400-1PB00-0AA0	Siemens
T2.50	200010269	ESIA4393	1	=ES+S/178.4	Pulse generator report	für Micromaster 4	6SE6400-0EN00-0AA0	Siemens
T2.50	200010333	ESIA7047	1	=ES+S/178.0	Profibus plug	gerade / Schneidklemmen	6GK 1500-0FC00	Siemens
T2.50	200011393	ESIZ2401	1	=ES+S/178.0	Screen connection record	MICRO MASTER 420	6SE6400-0GP00-0BA0	Siemens
T2.51	200030071	ESIA4302-N	1	=ES+S/179.0	frequency converter	MM440 380-480V / 2,2 KW	6SE 6440-2UD22-2BA1	Siemens
T2.51	200010198	ESIA2400	1	=ES+S/179.0	operater panel	BOP für Micromaster 4	6SE6400-0BP00-0AA0	Siemens
T2.51	200010268	ESIA4392	1	=ES+S/179.0	profibus module	für Micromaster 440	6SE6400-1PB00-0AA0	Siemens
T2.51	200010269	ESIA4393	1	=ES+S/179.4	Pulse generator report	für Micromaster 4	6SE6400-0EN00-0AA0	Siemens
T2.51	200010333	ESIA7047	1	=ES+S/179.0	Profibus plug	gerade / Schneidklemmen	6GK 1500-0FC00	Siemens
T2.51	200011393	ESIZ2401	1	=ES+S/179.0	Screen connection record	MICRO MASTER 420	6SE6400-0GP00-0BA0	Siemens
T2.52	200030071	ESIA4302-N	1	=ES+S/180.0	frequency converter	MM440 380-480V / 2,2 KW	6SE 6440-2UD22-2BA1	Siemens
T2.52	200010198	ESIA2400	1	=ES+S/180.0	operater panel	BOP für Micromaster 4	6SE6400-0BP00-0AA0	Siemens
T2.52	200010268	ESIA4392	1	=ES+S/180.0	profibus module	für Micromaster 440	6SE6400-1PB00-0AA0	Siemens
T2.52	200010269	ESIA4393	1	=ES+S/180.4	Pulse generator report	für Micromaster 4	6SE6400-0EN00-0AA0	Siemens
T2.52	200010333	ESIA7047	1	=ES+S/180.0	Profibus plug	gerade / Schneidklemmen	6GK 1500-0FC00	Siemens
T2.52	200011393	ESIZ2401	1	=ES+S/180.0	Screen connection record	MICRO MASTER 420	6SE6400-0GP00-0BA0	Siemens
T2.53	200030071	ESIA4302-N	1	=ES+S/182.0	frequency converter	MM440 380-480V / 2,2 KW	6SE 6440-2UD22-2BA1	Siemens
T2.53	200010198	ESIA2400	1	=ES+S/182.0	operater panel	BOP für Micromaster 4	6SE6400-0BP00-0AA0	Siemens
T2.53	200010268	ESIA4392	1	=ES+S/182.0	profibus module	für Micromaster 440	6SE6400-1PB00-0AA0	Siemens
T2.53	200010269	ESIA4393	1	=ES+S/182.4	Pulse generator report	für Micromaster 4	6SE6400-0EN00-0AA0	Siemens
T2.53	200010333	ESIA7047	1	=ES+S/182.0	Profibus plug	gerade / Schneidklemmen	6GK 1500-0FC00	Siemens
T2.53	200011393	ESIZ2401	1	=ES+S/182.0	Screen connection record	MICRO MASTER 420	6SE6400-0GP00-0BA0	Siemens
T2.54	200030071	ESIA4302-N	1	=ES+S/183.0	frequency converter	MM440 380-480V / 2,2 KW	6SE 6440-2UD22-2BA1	Siemens
T2.54	200010198	ESIA2400	1	=ES+S/183.0	operater panel	BOP für Micromaster 4	6SE6400-0BP00-0AA0	Siemens

Parts list

electrical construction

Artilelstückliste_Elo_SAP_001

DT	Part number new	Part number old	Quantity	Placement	Designation 1	Designation 2	Order number	Manufacturer
T2.54	200010268	ESIA4392	1	=ES+S/183.0	profibus module	für Micromaster 440	6SE6400-1PB00-0AA0	Siemens
T2.54	200010269	ESIA4393	1	=ES+S/183.4	Pulse generator report	für Micromaster 4	6SE6400-0EN00-0AA0	Siemens
T2.54	200010333	ESIA7047	1	=ES+S/183.0	Profibus plug	gerade / Schneidklemmen	6GK 1500-0FC00	Siemens
T2.54	200011393	ESIZ2401	1	=ES+S/183.0	Screen connection record	MICRO MASTER 420	6SE6400-0GP00-0BA0	Siemens
T2.55	200030071	ESIA4302-N	1	=ES+S/184.0	frequency converter	MM440 380-480V / 2,2 KW	6SE 6440-2UD22-2BA1	Siemens
T2.55	200010198	ESIA2400	1	=ES+S/184.0	operater panel	BOP für Micromaster 4	6SE6400-0BP00-0AA0	Siemens
T2.55	200010268	ESIA4392	1	=ES+S/184.0	profibus module	für Micromaster 440	6SE6400-1PB00-0AA0	Siemens
T2.55	200010269	ESIA4393	1	=ES+S/184.4	Pulse generator report	für Micromaster 4	6SE6400-0EN00-0AA0	Siemens
T2.55	200010333	ESIA7047	1	=ES+S/184.0	Profibus plug	gerade / Schneidklemmen	6GK 1500-0FC00	Siemens
T2.55	200011393	ESIZ2401	1	=ES+S/184.0	Screen connection record	MICRO MASTER 420	6SE6400-0GP00-0BA0	Siemens
T2.56	200030071	ESIA4302-N	1	=ES+S/185.0	frequency converter	MM440 380-480V / 2,2 KW	6SE 6440-2UD22-2BA1	Siemens
T2.56	200010198	ESIA2400	1	=ES+S/185.0	operater panel	BOP für Micromaster 4	6SE6400-0BP00-0AA0	Siemens
T2.56	200010268	ESIA4392	1	=ES+S/185.0	profibus module	für Micromaster 440	6SE6400-1PB00-0AA0	Siemens
T2.56	200010269	ESIA4393	1	=ES+S/185.4	Pulse generator report	für Micromaster 4	6SE6400-0EN00-0AA0	Siemens
T2.56	200010333	ESIA7047	1	=ES+S/185.0	Profibus plug	gerade / Schneidklemmen	6GK 1500-0FC00	Siemens
T2.56	200011393	ESIZ2401	1	=ES+S/185.0	Screen connection record	MICRO MASTER 420	6SE6400-0GP00-0BA0	Siemens
T2.57	200030071	ESIA4302-N	1	=ES+S/186.0	frequency converter	MM440 380-480V / 2,2 KW	6SE 6440-2UD22-2BA1	Siemens
T2.57	200010198	ESIA2400	1	=ES+S/186.0	operater panel	BOP für Micromaster 4	6SE6400-0BP00-0AA0	Siemens
T2.57	200010268	ESIA4392	1	=ES+S/186.0	profibus module	für Micromaster 440	6SE6400-1PB00-0AA0	Siemens
T2.57	200010269	ESIA4393	1	=ES+S/186.4	Pulse generator report	für Micromaster 4	6SE6400-0EN00-0AA0	Siemens
T2.57	200010333	ESIA7047	1	=ES+S/186.0	Profibus plug	gerade / Schneidklemmen	6GK 1500-0FC00	Siemens
T2.57	200011393	ESIZ2401	1	=ES+S/186.0	Screen connection record	MICRO MASTER 420	6SE6400-0GP00-0BA0	Siemens
T2.58	200030071	ESIA4302-N	1	=ES+S/187.0	frequency converter	MM440 380-480V / 2,2 KW	6SE 6440-2UD22-2BA1	Siemens
T2.58	200010198	ESIA2400	1	=ES+S/187.0	operater panel	BOP für Micromaster 4	6SE6400-0BP00-0AA0	Siemens
T2.58	200010268	ESIA4392	1	=ES+S/187.0	profibus module	für Micromaster 440	6SE6400-1PB00-0AA0	Siemens
T2.58	200010269	ESIA4393	1	=ES+S/187.4	Pulse generator report	für Micromaster 4	6SE6400-0EN00-0AA0	Siemens
T2.58	200010333	ESIA7047	1	=ES+S/187.0	Profibus plug	gerade / Schneidklemmen	6GK 1500-0FC00	Siemens
T2.58	200011393	ESIZ2401	1	=ES+S/187.0	Screen connection record	MICRO MASTER 420	6SE6400-0GP00-0BA0	Siemens
T2.59	200030071	ESIA4302-N	1	=ES+S/189.0	frequency converter	MM440 380-480V / 2,2 KW	6SE 6440-2UD22-2BA1	Siemens
T2.59	200010198	ESIA2400	1	=ES+S/189.0	operater panel	BOP für Micromaster 4	6SE6400-0BP00-0AA0	Siemens
T2.59	200010268	ESIA4392	1	=ES+S/189.0	profibus module	für Micromaster 440	6SE6400-1PB00-0AA0	Siemens
T2.59	200010269	ESIA4393	1	=ES+S/189.4	Pulse generator report	für Micromaster 4	6SE6400-0EN00-0AA0	Siemens
T2.59	200010333	ESIA7047	1	=ES+S/189.0	Profibus plug	gerade / Schneidklemmen	6GK 1500-0FC00	Siemens
T2.59	200011393	ESIZ2401	1	=ES+S/189.0	Screen connection record	MICRO MASTER 420	6SE6400-0GP00-0BA0	Siemens
T2.60	200030071	ESIA4302-N	1	=ES+S/190.0	frequency converter	MM440 380-480V / 2,2 KW	6SE 6440-2UD22-2BA1	Siemens
T2.60	200010198	ESIA2400	1	=ES+S/190.0	operater panel	BOP für Micromaster 4	6SE6400-0BP00-0AA0	Siemens
T2.60	200010268	ESIA4392	1	=ES+S/190.0	profibus module	für Micromaster 440	6SE6400-1PB00-0AA0	Siemens
T2.60	200010269	ESIA4393	1	=ES+S/190.4	Pulse generator report	für Micromaster 4	6SE6400-0EN00-0AA0	Siemens

Parts list

electrical construction

Artilelstückliste_Elo_SAP_001

DT	Part number new	Part number old	Quantity	Placement	Designation 1	Designation 2	Order number	Manufacturer
T2.60	200010333	ESIA7047	1	=ES+S/190.0	Profibus plug	gerade / Schneidklemmen	6GK 1500-0FC00	Siemens
T2.60	200011393	ESIZ2401	1	=ES+S/190.0	Screen connection record	MICRO MASTER 420	6SE6400-0GP00-0BA0	Siemens
T2.61	200030071	ESIA4302-N	1	=ES+S/191.0	frequency converter	MM440 380-480V / 2,2 KW	6SE 6440-2UD22-2BA1	Siemens
T2.61	200010198	ESIA2400	1	=ES+S/191.0	operater panel	BOP für Micromaster 4	6SE6400-0BP00-0AA0	Siemens
T2.61	200010268	ESIA4392	1	=ES+S/191.0	profibus module	für Micromaster 440	6SE6400-1PB00-0AA0	Siemens
T2.61	200010269	ESIA4393	1	=ES+S/191.4	Pulse generator report	für Micromaster 4	6SE6400-0EN00-0AA0	Siemens
T2.61	200010333	ESIA7047	1	=ES+S/191.0	Profibus plug	gerade / Schneidklemmen	6GK 1500-0FC00	Siemens
T2.61	200011393	ESIZ2401	1	=ES+S/191.0	Screen connection record	MICRO MASTER 420	6SE6400-0GP00-0BA0	Siemens
T2.62	200030071	ESIA4302-N	1	=ES+S/192.0	frequency converter	MM440 380-480V / 2,2 KW	6SE 6440-2UD22-2BA1	Siemens
T2.62	200010198	ESIA2400	1	=ES+S/192.0	operater panel	BOP für Micromaster 4	6SE6400-0BP00-0AA0	Siemens
T2.62	200010268	ESIA4392	1	=ES+S/192.0	profibus module	für Micromaster 440	6SE6400-1PB00-0AA0	Siemens
T2.62	200010269	ESIA4393	1	=ES+S/192.4	Pulse generator report	für Micromaster 4	6SE6400-0EN00-0AA0	Siemens
T2.62	200010333	ESIA7047	1	=ES+S/192.0	Profibus plug	gerade / Schneidklemmen	6GK 1500-0FC00	Siemens
T2.62	200011393	ESIZ2401	1	=ES+S/192.0	Screen connection record	MICRO MASTER 420	6SE6400-0GP00-0BA0	Siemens
T2.63	200030071	ESIA4302-N	1	=ES+S/193.0	frequency converter	MM440 380-480V / 2,2 KW	6SE 6440-2UD22-2BA1	Siemens
T2.63	200010198	ESIA2400	1	=ES+S/193.0	operater panel	BOP für Micromaster 4	6SE6400-0BP00-0AA0	Siemens
T2.63	200010268	ESIA4392	1	=ES+S/193.0	profibus module	für Micromaster 440	6SE6400-1PB00-0AA0	Siemens
T2.63	200010269	ESIA4393	1	=ES+S/193.4	Pulse generator report	für Micromaster 4	6SE6400-0EN00-0AA0	Siemens
T2.63	200010333	ESIA7047	1	=ES+S/193.0	Profibus plug	gerade / Schneidklemmen	6GK 1500-0FC00	Siemens
T2.63	200011393	ESIZ2401	1	=ES+S/193.0	Screen connection record	MICRO MASTER 420	6SE6400-0GP00-0BA0	Siemens
T9	200030044	ESIA4337-N	1	=ES+S/200.0	frequency converter	MM440 380-480V / 37 KW	6SE 6440-2UD33-7EA1	Siemens
T9	200010267	ESIA4391	1	=ES+S/200.0	operater panel	AOP für Micromaster 4	6SE6400-0AP00-0AA1	Siemens
T9	200010268	ESIA4392	1	=ES+S/200.0	profibus module	für Micromaster 440	6SE6400-1PB00-0AA0	Siemens
T9	200010333	ESIA7047	1	=ES+S/200.0	Profibus plug	gerade / Schneidklemmen	6GK 1500-0FC00	Siemens
T10	200030044	ESIA4337-N	1	=ES+S/201.0	frequency converter	MM440 380-480V / 37 KW	6SE 6440-2UD33-7EA1	Siemens
T10	200010267	ESIA4391	1	=ES+S/201.0	operater panel	AOP für Micromaster 4	6SE6400-0AP00-0AA1	Siemens
T10	200010268	ESIA4392	1	=ES+S/201.0	profibus module	für Micromaster 440	6SE6400-1PB00-0AA0	Siemens
T10	200010333	ESIA7047	1	=ES+S/201.0	Profibus plug	gerade / Schneidklemmen	6GK 1500-0FC00	Siemens
T11	200030044	ESIA4337-N	1	=ES+S/202.0	frequency converter	MM440 380-480V / 37 KW	6SE 6440-2UD33-7EA1	Siemens
T11	200010267	ESIA4391	1	=ES+S/202.0	operater panel	AOP für Micromaster 4	6SE6400-0AP00-0AA1	Siemens
T11	200010268	ESIA4392	1	=ES+S/202.0	profibus module	für Micromaster 440	6SE6400-1PB00-0AA0	Siemens
T11	200010333	ESIA7047	1	=ES+S/202.0	Profibus plug	gerade / Schneidklemmen	6GK 1500-0FC00	Siemens
T12	200030044	ESIA4337-N	1	=ES+S/203.0	frequency converter	MM440 380-480V / 37 KW	6SE 6440-2UD33-7EA1	Siemens
T12	200010267	ESIA4391	1	=ES+S/203.0	operater panel	AOP für Micromaster 4	6SE6400-0AP00-0AA1	Siemens
T12	200010268	ESIA4392	1	=ES+S/203.0	profibus module	für Micromaster 440	6SE6400-1PB00-0AA0	Siemens
T12	200010333	ESIA7047	1	=ES+S/203.0	Profibus plug	gerade / Schneidklemmen	6GK 1500-0FC00	Siemens
T13	200030044	ESIA4337-N	1	=ES+S/204.0	frequency converter	MM440 380-480V / 37 KW	6SE 6440-2UD33-7EA1	Siemens
T13	200010267	ESIA4391	1	=ES+S/204.0	operater panel	AOP für Micromaster 4	6SE6400-0AP00-0AA1	Siemens

Parts list

electrical construction

Artilelstückliste_Elo_SAP_001

DT	Part number new	Part number old	Quantity	Placement	Designation 1	Designation 2	Order number	Manufacturer
T13	200010268	ESIA4392	1	=ES+S/204.0	profibus module	für Micromaster 440	6SE6400-1PB00-0AA0	Siemens
T13	200010333	ESIA7047	1	=ES+S/204.0	Profibus plug	gerade / Schneidklemmen	6GK 1500-0FC00	Siemens
T14	200030044	ESIA4337-N	1	=ES+S/205.0	frequency converter	MM440 380-480V / 37 KW	6SE 6440-2UD33-7EA1	Siemens
T14	200010267	ESIA4391	1	=ES+S/205.0	operater panel	AOP für Micromaster 4	6SE6400-0AP00-0AA1	Siemens
T14	200010268	ESIA4392	1	=ES+S/205.0	profibus module	für Micromaster 440	6SE6400-1PB00-0AA0	Siemens
T14	200010333	ESIA7047	1	=ES+S/205.0	Profibus plug	gerade / Schneidklemmen	6GK 1500-0FC00	Siemens
T15	200030044	ESIA4337-N	1	=ES+S/206.0	frequency converter	MM440 380-480V / 37 KW	6SE 6440-2UD33-7EA1	Siemens
T15	200010267	ESIA4391	1	=ES+S/206.0	operater panel	AOP für Micromaster 4	6SE6400-0AP00-0AA1	Siemens
T15	200010268	ESIA4392	1	=ES+S/206.0	profibus module	für Micromaster 440	6SE6400-1PB00-0AA0	Siemens
T15	200010333	ESIA7047	1	=ES+S/206.0	Profibus plug	gerade / Schneidklemmen	6GK 1500-0FC00	Siemens
T16	200030044	ESIA4337-N	1	=ES+S/207.0	frequency converter	MM440 380-480V / 37 KW	6SE 6440-2UD33-7EA1	Siemens
T16	200010267	ESIA4391	1	=ES+S/207.0	operater panel	AOP für Micromaster 4	6SE6400-0AP00-0AA1	Siemens
T16	200010268	ESIA4392	1	=ES+S/207.0	profibus module	für Micromaster 440	6SE6400-1PB00-0AA0	Siemens
T16	200010333	ESIA7047	1	=ES+S/207.0	Profibus plug	gerade / Schneidklemmen	6GK 1500-0FC00	Siemens
T230	200005340	EBLT3205	1	=ES+S/210.1	transformer control voltage	5000 VA 400V/2x115V 50 Hz	BUST 5000/4/23	Block
T230.2	200005340	EBLT3205	1	=ES+S/214.1	transformer control voltage	5000 VA 400V/2x115V 50 Hz	BUST 5000/4/23	Block
TN1.1	200031768	ESIZ4203	1	=ES+S/3.1	net commutation inductor	für MM4 - 2,2 - 3kW	6SE6400-3CC01-0BD3	Siemens
TN1.2	200031768	ESIZ4203	1	=ES+S/4.1	net commutation inductor	für MM4 - 2,2 - 3kW	6SE6400-3CC01-0BD3	Siemens
TN1.3	200031768	ESIZ4203	1	=ES+S/5.1	net commutation inductor	für MM4 - 2,2 - 3kW	6SE6400-3CC01-0BD3	Siemens
TN1.4	200031768	ESIZ4203	1	=ES+S/6.1	net commutation inductor	für MM4 - 2,2 - 3kW	6SE6400-3CC01-0BD3	Siemens
TN1.5	200031768	ESIZ4203	1	=ES+S/7.1	net commutation inductor	für MM4 - 2,2 - 3kW	6SE6400-3CC01-0BD3	Siemens
TN1.6	200031768	ESIZ4203	1	=ES+S/8.1	net commutation inductor	für MM4 - 2,2 - 3kW	6SE6400-3CC01-0BD3	Siemens
TN1.7	200031768	ESIZ4203	1	=ES+S/10.1	net commutation inductor	für MM4 - 2,2 - 3kW	6SE6400-3CC01-0BD3	Siemens
TN1.8	200031768	ESIZ4203	1	=ES+S/11.1	net commutation inductor	für MM4 - 2,2 - 3kW	6SE6400-3CC01-0BD3	Siemens
TN1.9	200031768	ESIZ4203	1	=ES+S/12.1	net commutation inductor	für MM4 - 2,2 - 3kW	6SE6400-3CC01-0BD3	Siemens
TN1.10	200031768	ESIZ4203	1	=ES+S/13.1	net commutation inductor	für MM4 - 2,2 - 3kW	6SE6400-3CC01-0BD3	Siemens
TN1.11	200031768	ESIZ4203	1	=ES+S/14.1	net commutation inductor	für MM4 - 2,2 - 3kW	6SE6400-3CC01-0BD3	Siemens
TN1.12	200031768	ESIZ4203	1	=ES+S/15.1	net commutation inductor	für MM4 - 2,2 - 3kW	6SE6400-3CC01-0BD3	Siemens
TN1.13	200031768	ESIZ4203	1	=ES+S/17.1	net commutation inductor	für MM4 - 2,2 - 3kW	6SE6400-3CC01-0BD3	Siemens
TN1.14	200031768	ESIZ4203	1	=ES+S/18.1	net commutation inductor	für MM4 - 2,2 - 3kW	6SE6400-3CC01-0BD3	Siemens
TN1.15	200031768	ESIZ4203	1	=ES+S/19.1	net commutation inductor	für MM4 - 2,2 - 3kW	6SE6400-3CC01-0BD3	Siemens
TN1.16	200031768	ESIZ4203	1	=ES+S/20.1	net commutation inductor	für MM4 - 2,2 - 3kW	6SE6400-3CC01-0BD3	Siemens
TN1.17	200031768	ESIZ4203	1	=ES+S/21.1	net commutation inductor	für MM4 - 2,2 - 3kW	6SE6400-3CC01-0BD3	Siemens
TN1.18	200031768	ESIZ4203	1	=ES+S/22.1	net commutation inductor	für MM4 - 2,2 - 3kW	6SE6400-3CC01-0BD3	Siemens
TN1.19	200031768	ESIZ4203	1	=ES+S/24.1	net commutation inductor	für MM4 - 2,2 - 3kW	6SE6400-3CC01-0BD3	Siemens
TN1.20	200031768	ESIZ4203	1	=ES+S/25.1	net commutation inductor	für MM4 - 2,2 - 3kW	6SE6400-3CC01-0BD3	Siemens
TN1.21	200031768	ESIZ4203	1	=ES+S/26.1	net commutation inductor	für MM4 - 2,2 - 3kW	6SE6400-3CC01-0BD3	Siemens
TN1.22	200031768	ESIZ4203	1	=ES+S/27.1	net commutation inductor	für MM4 - 2,2 - 3kW	6SE6400-3CC01-0BD3	Siemens

Parts list

electrical construction

Artilelstückliste_Elo_SAP_001

DT	Part number new	Part number old	Quantity	Placement	Designation 1	Designation 2	Order number	Manufacturer
TN1.23	200031768	ESIZ4203	1	=ES+S/28.1	net commutation inductor	für MM4 - 2,2 - 3kW	6SE6400-3CC01-0BD3	Siemens
TN1.24	200031768	ESIZ4203	1	=ES+S/29.1	net commutation inductor	für MM4 - 2,2 - 3kW	6SE6400-3CC01-0BD3	Siemens
TN1.25	200031768	ESIZ4203	1	=ES+S/31.1	net commutation inductor	für MM4 - 2,2 - 3kW	6SE6400-3CC01-0BD3	Siemens
TN1.26	200031768	ESIZ4203	1	=ES+S/32.1	net commutation inductor	für MM4 - 2,2 - 3kW	6SE6400-3CC01-0BD3	Siemens
TN1.27	200031768	ESIZ4203	1	=ES+S/33.1	net commutation inductor	für MM4 - 2,2 - 3kW	6SE6400-3CC01-0BD3	Siemens
TN1.28	200031768	ESIZ4203	1	=ES+S/34.1	net commutation inductor	für MM4 - 2,2 - 3kW	6SE6400-3CC01-0BD3	Siemens
TN1.29	200031768	ESIZ4203	1	=ES+S/35.1	net commutation inductor	für MM4 - 2,2 - 3kW	6SE6400-3CC01-0BD3	Siemens
TN1.30	200031768	ESIZ4203	1	=ES+S/36.1	net commutation inductor	für MM4 - 2,2 - 3kW	6SE6400-3CC01-0BD3	Siemens
TN1.31	200031768	ESIZ4203	1	=ES+S/38.1	net commutation inductor	für MM4 - 2,2 - 3kW	6SE6400-3CC01-0BD3	Siemens
TN1.32	200031768	ESIZ4203	1	=ES+S/39.1	net commutation inductor	für MM4 - 2,2 - 3kW	6SE6400-3CC01-0BD3	Siemens
TN1.33	200031768	ESIZ4203	1	=ES+S/40.1	net commutation inductor	für MM4 - 2,2 - 3kW	6SE6400-3CC01-0BD3	Siemens
TN1.34	200031768	ESIZ4203	1	=ES+S/41.1	net commutation inductor	für MM4 - 2,2 - 3kW	6SE6400-3CC01-0BD3	Siemens
TN1.35	200031768	ESIZ4203	1	=ES+S/42.1	net commutation inductor	für MM4 - 2,2 - 3kW	6SE6400-3CC01-0BD3	Siemens
TN1.36	200031768	ESIZ4203	1	=ES+S/43.1	net commutation inductor	für MM4 - 2,2 - 3kW	6SE6400-3CC01-0BD3	Siemens
TN1.37	200031768	ESIZ4203	1	=ES+S/45.1	net commutation inductor	für MM4 - 2,2 - 3kW	6SE6400-3CC01-0BD3	Siemens
TN1.38	200031768	ESIZ4203	1	=ES+S/46.1	net commutation inductor	für MM4 - 2,2 - 3kW	6SE6400-3CC01-0BD3	Siemens
TN1.39	200031768	ESIZ4203	1	=ES+S/47.1	net commutation inductor	für MM4 - 2,2 - 3kW	6SE6400-3CC01-0BD3	Siemens
TN1.40	200031768	ESIZ4203	1	=ES+S/48.1	net commutation inductor	für MM4 - 2,2 - 3kW	6SE6400-3CC01-0BD3	Siemens
TN1.41	200031768	ESIZ4203	1	=ES+S/49.1	net commutation inductor	für MM4 - 2,2 - 3kW	6SE6400-3CC01-0BD3	Siemens
TN1.42	200031768	ESIZ4203	1	=ES+S/50.1	net commutation inductor	für MM4 - 2,2 - 3kW	6SE6400-3CC01-0BD3	Siemens
TN1.43	200031768	ESIZ4203	1	=ES+S/52.1	net commutation inductor	für MM4 - 2,2 - 3kW	6SE6400-3CC01-0BD3	Siemens
TN1.44	200031768	ESIZ4203	1	=ES+S/53.1	net commutation inductor	für MM4 - 2,2 - 3kW	6SE6400-3CC01-0BD3	Siemens
TN1.45	200031768	ESIZ4203	1	=ES+S/54.1	net commutation inductor	für MM4 - 2,2 - 3kW	6SE6400-3CC01-0BD3	Siemens
TN1.46	200031768	ESIZ4203	1	=ES+S/55.1	net commutation inductor	für MM4 - 2,2 - 3kW	6SE6400-3CC01-0BD3	Siemens
TN1.47	200031768	ESIZ4203	1	=ES+S/56.1	net commutation inductor	für MM4 - 2,2 - 3kW	6SE6400-3CC01-0BD3	Siemens
TN1.48	200031768	ESIZ4203	1	=ES+S/57.1	net commutation inductor	für MM4 - 2,2 - 3kW	6SE6400-3CC01-0BD3	Siemens
TN1.49	200031768	ESIZ4203	1	=ES+S/59.1	net commutation inductor	für MM4 - 2,2 - 3kW	6SE6400-3CC01-0BD3	Siemens
TN1.50	200031768	ESIZ4203	1	=ES+S/60.1	net commutation inductor	für MM4 - 2,2 - 3kW	6SE6400-3CC01-0BD3	Siemens
TN1.51	200031768	ESIZ4203	1	=ES+S/61.1	net commutation inductor	für MM4 - 2,2 - 3kW	6SE6400-3CC01-0BD3	Siemens
TN1.52	200031768	ESIZ4203	1	=ES+S/62.1	net commutation inductor	für MM4 - 2,2 - 3kW	6SE6400-3CC01-0BD3	Siemens
TN1.53	200031768	ESIZ4203	1	=ES+S/63.1	net commutation inductor	für MM4 - 2,2 - 3kW	6SE6400-3CC01-0BD3	Siemens
TN1.54	200031768	ESIZ4203	1	=ES+S/64.1	net commutation inductor	für MM4 - 2,2 - 3kW	6SE6400-3CC01-0BD3	Siemens
TN1.55	200031768	ESIZ4203	1	=ES+S/68.1	net commutation inductor	für MM4 - 2,2 - 3kW	6SE6400-3CC01-0BD3	Siemens
TN1.56	200031768	ESIZ4203	1	=ES+S/69.1	net commutation inductor	für MM4 - 2,2 - 3kW	6SE6400-3CC01-0BD3	Siemens
TN1.57	200031768	ESIZ4203	1	=ES+S/70.1	net commutation inductor	für MM4 - 2,2 - 3kW	6SE6400-3CC01-0BD3	Siemens
TN1.58	200031768	ESIZ4203	1	=ES+S/71.1	net commutation inductor	für MM4 - 2,2 - 3kW	6SE6400-3CC01-0BD3	Siemens
TN1.59	200031768	ESIZ4203	1	=ES+S/72.1	net commutation inductor	für MM4 - 2,2 - 3kW	6SE6400-3CC01-0BD3	Siemens
TN1.60	200031768	ESIZ4203	1	=ES+S/73.1	net commutation inductor	für MM4 - 2,2 - 3kW	6SE6400-3CC01-0BD3	Siemens

Parts list

electrical construction

Artilelstückliste_Elo_SAP_001

DT	Part number new	Part number old	Quantity	Placement	Designation 1	Designation 2	Order number	Manufacturer
TN1.61	200031768	ESIZ4203	1	=ES+S/75.1	net commutation inductor	für MM4 - 2,2 - 3kW	6SE6400-3CC01-0BD3	Siemens
TN1.62	200031768	ESIZ4203	1	=ES+S/76.1	net commutation inductor	für MM4 - 2,2 - 3kW	6SE6400-3CC01-0BD3	Siemens
TN1.63	200031768	ESIZ4203	1	=ES+S/77.1	net commutation inductor	für MM4 - 2,2 - 3kW	6SE6400-3CC01-0BD3	Siemens
TN1.64	200031768	ESIZ4203	1	=ES+S/78.1	net commutation inductor	für MM4 - 2,2 - 3kW	6SE6400-3CC01-0BD3	Siemens
TN1.65	200031768	ESIZ4203	1	=ES+S/79.1	net commutation inductor	für MM4 - 2,2 - 3kW	6SE6400-3CC01-0BD3	Siemens
TN1.66	200031768	ESIZ4203	1	=ES+S/80.1	net commutation inductor	für MM4 - 2,2 - 3kW	6SE6400-3CC01-0BD3	Siemens
TN1.67	200031768	ESIZ4203	1	=ES+S/82.1	net commutation inductor	für MM4 - 2,2 - 3kW	6SE6400-3CC01-0BD3	Siemens
TN1.68	200031768	ESIZ4203	1	=ES+S/83.1	net commutation inductor	für MM4 - 2,2 - 3kW	6SE6400-3CC01-0BD3	Siemens
TN1.69	200031768	ESIZ4203	1	=ES+S/84.1	net commutation inductor	für MM4 - 2,2 - 3kW	6SE6400-3CC01-0BD3	Siemens
TN1.70	200031768	ESIZ4203	1	=ES+S/85.1	net commutation inductor	für MM4 - 2,2 - 3kW	6SE6400-3CC01-0BD3	Siemens
TN1.71	200031768	ESIZ4203	1	=ES+S/86.1	net commutation inductor	für MM4 - 2,2 - 3kW	6SE6400-3CC01-0BD3	Siemens
TN1.72	200031768	ESIZ4203	1	=ES+S/87.1	net commutation inductor	für MM4 - 2,2 - 3kW	6SE6400-3CC01-0BD3	Siemens
TN1.73	200031768	ESIZ4203	1	=ES+S/89.1	net commutation inductor	für MM4 - 2,2 - 3kW	6SE6400-3CC01-0BD3	Siemens
TN1.74	200031768	ESIZ4203	1	=ES+S/90.1	net commutation inductor	für MM4 - 2,2 - 3kW	6SE6400-3CC01-0BD3	Siemens
TN1.75	200031768	ESIZ4203	1	=ES+S/91.1	net commutation inductor	für MM4 - 2,2 - 3kW	6SE6400-3CC01-0BD3	Siemens
TN1.76	200031768	ESIZ4203	1	=ES+S/92.1	net commutation inductor	für MM4 - 2,2 - 3kW	6SE6400-3CC01-0BD3	Siemens
TN1.77	200031768	ESIZ4203	1	=ES+S/93.1	net commutation inductor	für MM4 - 2,2 - 3kW	6SE6400-3CC01-0BD3	Siemens
TN1.78	200031768	ESIZ4203	1	=ES+S/94.1	net commutation inductor	für MM4 - 2,2 - 3kW	6SE6400-3CC01-0BD3	Siemens
TN1.79	200031768	ESIZ4203	1	=ES+S/96.1	net commutation inductor	für MM4 - 2,2 - 3kW	6SE6400-3CC01-0BD3	Siemens
TN1.80	200031768	ESIZ4203	1	=ES+S/97.1	net commutation inductor	für MM4 - 2,2 - 3kW	6SE6400-3CC01-0BD3	Siemens
TN1.81	200031768	ESIZ4203	1	=ES+S/98.1	net commutation inductor	für MM4 - 2,2 - 3kW	6SE6400-3CC01-0BD3	Siemens
TN1.82	200031768	ESIZ4203	1	=ES+S/99.1	net commutation inductor	für MM4 - 2,2 - 3kW	6SE6400-3CC01-0BD3	Siemens
TN1.83	200031768	ESIZ4203	1	=ES+S/100.1	net commutation inductor	für MM4 - 2,2 - 3kW	6SE6400-3CC01-0BD3	Siemens
TN1.84	200031768	ESIZ4203	1	=ES+S/101.1	net commutation inductor	für MM4 - 2,2 - 3kW	6SE6400-3CC01-0BD3	Siemens
TN1.85	200031768	ESIZ4203	1	=ES+S/103.1	net commutation inductor	für MM4 - 2,2 - 3kW	6SE6400-3CC01-0BD3	Siemens
TN1.86	200031768	ESIZ4203	1	=ES+S/104.1	net commutation inductor	für MM4 - 2,2 - 3kW	6SE6400-3CC01-0BD3	Siemens
TN1.87	200031768	ESIZ4203	1	=ES+S/105.1	net commutation inductor	für MM4 - 2,2 - 3kW	6SE6400-3CC01-0BD3	Siemens
TN1.88	200031768	ESIZ4203	1	=ES+S/106.1	net commutation inductor	für MM4 - 2,2 - 3kW	6SE6400-3CC01-0BD3	Siemens
TN1.89	200031768	ESIZ4203	1	=ES+S/107.1	net commutation inductor	für MM4 - 2,2 - 3kW	6SE6400-3CC01-0BD3	Siemens
TN1.90	200031768	ESIZ4203	1	=ES+S/108.1	net commutation inductor	für MM4 - 2,2 - 3kW	6SE6400-3CC01-0BD3	Siemens
TN1.91	200031768	ESIZ4203	1	=ES+S/110.1	net commutation inductor	für MM4 - 2,2 - 3kW	6SE6400-3CC01-0BD3	Siemens
TN1.92	200031768	ESIZ4203	1	=ES+S/111.1	net commutation inductor	für MM4 - 2,2 - 3kW	6SE6400-3CC01-0BD3	Siemens
TN1.93	200031768	ESIZ4203	1	=ES+S/112.1	net commutation inductor	für MM4 - 2,2 - 3kW	6SE6400-3CC01-0BD3	Siemens
TN1.95	200031768	ESIZ4203	1	=ES+S/113.1	net commutation inductor	für MM4 - 2,2 - 3kW	6SE6400-3CC01-0BD3	Siemens
TN1.97	200029739	ESIZ4207	1	=ES+S/114.1	net commutation inductor	für MM4 - 5,5 - 7,5kW	6SE6400-3CC02-2CD3	Siemens
TN1.99	200031768	ESIZ4203	1	=ES+S/115.1	net commutation inductor	für MM4 - 2,2 - 3kW	6SE6400-3CC01-0BD3	Siemens
TN1.101	200029739	ESIZ4207	1	=ES+S/117.1	net commutation inductor	für MM4 - 5,5 - 7,5kW	6SE6400-3CC02-2CD3	Siemens
TN1.102	200029739	ESIZ4207	1	=ES+S/118.1	net commutation inductor	für MM4 - 5,5 - 7,5kW	6SE6400-3CC02-2CD3	Siemens

Parts list

electrical construction

Artilelstückliste_Elo_SAP_001

DT	Part number new	Part number old	Quantity	Placement	Designation 1	Designation 2	Order number	Manufacturer
TN2.1	200031768	ESIZ4203	1	=ES+S/119.1	net commutation inductor	für MM4 - 2,2 - 3kW	6SE6400-3CC01-0BD3	Siemens
TN2.2	200031768	ESIZ4203	1	=ES+S/120.1	net commutation inductor	für MM4 - 2,2 - 3kW	6SE6400-3CC01-0BD3	Siemens
TN2.3	200031768	ESIZ4203	1	=ES+S/121.1	net commutation inductor	für MM4 - 2,2 - 3kW	6SE6400-3CC01-0BD3	Siemens
TN2.4	200031768	ESIZ4203	1	=ES+S/122.1	net commutation inductor	für MM4 - 2,2 - 3kW	6SE6400-3CC01-0BD3	Siemens
TN2.5	200031768	ESIZ4203	1	=ES+S/123.1	net commutation inductor	für MM4 - 2,2 - 3kW	6SE6400-3CC01-0BD3	Siemens
TN2.6	200031768	ESIZ4203	1	=ES+S/125.1	net commutation inductor	für MM4 - 2,2 - 3kW	6SE6400-3CC01-0BD3	Siemens
TN2.7	200031768	ESIZ4203	1	=ES+S/126.1	net commutation inductor	für MM4 - 2,2 - 3kW	6SE6400-3CC01-0BD3	Siemens
TN2.8	200031768	ESIZ4203	1	=ES+S/127.1	net commutation inductor	für MM4 - 2,2 - 3kW	6SE6400-3CC01-0BD3	Siemens
TN2.9	200031768	ESIZ4203	1	=ES+S/128.1	net commutation inductor	für MM4 - 2,2 - 3kW	6SE6400-3CC01-0BD3	Siemens
TN2.10	200031768	ESIZ4203	1	=ES+S/129.1	net commutation inductor	für MM4 - 2,2 - 3kW	6SE6400-3CC01-0BD3	Siemens
TN2.11	200031768	ESIZ4203	1	=ES+S/133.1	net commutation inductor	für MM4 - 2,2 - 3kW	6SE6400-3CC01-0BD3	Siemens
TN2.12	200031768	ESIZ4203	1	=ES+S/134.1	net commutation inductor	für MM4 - 2,2 - 3kW	6SE6400-3CC01-0BD3	Siemens
TN2.13	200031768	ESIZ4203	1	=ES+S/135.1	net commutation inductor	für MM4 - 2,2 - 3kW	6SE6400-3CC01-0BD3	Siemens
TN2.14	200031768	ESIZ4203	1	=ES+S/136.1	net commutation inductor	für MM4 - 2,2 - 3kW	6SE6400-3CC01-0BD3	Siemens
TN2.15	200031768	ESIZ4203	1	=ES+S/137.1	net commutation inductor	für MM4 - 2,2 - 3kW	6SE6400-3CC01-0BD3	Siemens
TN2.16	200031768	ESIZ4203	1	=ES+S/138.1	net commutation inductor	für MM4 - 2,2 - 3kW	6SE6400-3CC01-0BD3	Siemens
TN2.17	200031768	ESIZ4203	1	=ES+S/140.1	net commutation inductor	für MM4 - 2,2 - 3kW	6SE6400-3CC01-0BD3	Siemens
TN2.18	200031768	ESIZ4203	1	=ES+S/141.1	net commutation inductor	für MM4 - 2,2 - 3kW	6SE6400-3CC01-0BD3	Siemens
TN2.19	200031768	ESIZ4203	1	=ES+S/142.1	net commutation inductor	für MM4 - 2,2 - 3kW	6SE6400-3CC01-0BD3	Siemens
TN2.20	200031768	ESIZ4203	1	=ES+S/143.1	net commutation inductor	für MM4 - 2,2 - 3kW	6SE6400-3CC01-0BD3	Siemens
TN2.21	200031768	ESIZ4203	1	=ES+S/144.1	net commutation inductor	für MM4 - 2,2 - 3kW	6SE6400-3CC01-0BD3	Siemens
TN2.22	200031768	ESIZ4203	1	=ES+S/145.1	net commutation inductor	für MM4 - 2,2 - 3kW	6SE6400-3CC01-0BD3	Siemens
TN2.23	200031768	ESIZ4203	1	=ES+S/147.1	net commutation inductor	für MM4 - 2,2 - 3kW	6SE6400-3CC01-0BD3	Siemens
TN2.24	200031768	ESIZ4203	1	=ES+S/148.1	net commutation inductor	für MM4 - 2,2 - 3kW	6SE6400-3CC01-0BD3	Siemens
TN2.25	200031768	ESIZ4203	1	=ES+S/149.1	net commutation inductor	für MM4 - 2,2 - 3kW	6SE6400-3CC01-0BD3	Siemens
TN2.26	200031768	ESIZ4203	1	=ES+S/150.1	net commutation inductor	für MM4 - 2,2 - 3kW	6SE6400-3CC01-0BD3	Siemens
TN2.27	200031768	ESIZ4203	1	=ES+S/151.1	net commutation inductor	für MM4 - 2,2 - 3kW	6SE6400-3CC01-0BD3	Siemens
TN2.28	200031768	ESIZ4203	1	=ES+S/152.1	net commutation inductor	für MM4 - 2,2 - 3kW	6SE6400-3CC01-0BD3	Siemens
TN2.29	200031768	ESIZ4203	1	=ES+S/154.1	net commutation inductor	für MM4 - 2,2 - 3kW	6SE6400-3CC01-0BD3	Siemens
TN2.30	200031768	ESIZ4203	1	=ES+S/155.1	net commutation inductor	für MM4 - 2,2 - 3kW	6SE6400-3CC01-0BD3	Siemens
TN2.31	200031768	ESIZ4203	1	=ES+S/156.1	net commutation inductor	für MM4 - 2,2 - 3kW	6SE6400-3CC01-0BD3	Siemens
TN2.32	200031768	ESIZ4203	1	=ES+S/157.1	net commutation inductor	für MM4 - 2,2 - 3kW	6SE6400-3CC01-0BD3	Siemens
TN2.33	200031768	ESIZ4203	1	=ES+S/158.1	net commutation inductor	für MM4 - 2,2 - 3kW	6SE6400-3CC01-0BD3	Siemens
TN2.34	200031768	ESIZ4203	1	=ES+S/159.1	net commutation inductor	für MM4 - 2,2 - 3kW	6SE6400-3CC01-0BD3	Siemens
TN2.35	200031768	ESIZ4203	1	=ES+S/161.1	net commutation inductor	für MM4 - 2,2 - 3kW	6SE6400-3CC01-0BD3	Siemens
TN2.36	200031768	ESIZ4203	1	=ES+S/162.1	net commutation inductor	für MM4 - 2,2 - 3kW	6SE6400-3CC01-0BD3	Siemens
TN2.37	200031768	ESIZ4203	1	=ES+S/163.1	net commutation inductor	für MM4 - 2,2 - 3kW	6SE6400-3CC01-0BD3	Siemens
TN2.38	200031768	ESIZ4203	1	=ES+S/164.1	net commutation inductor	für MM4 - 2,2 - 3kW	6SE6400-3CC01-0BD3	Siemens

Parts list

electrical construction

Artilelstückliste_Elo_SAP_001

DT	Part number new	Part number old	Quantity	Placement	Designation 1	Designation 2	Order number	Manufacturer
TN2.39	200031768	ESIZ4203	1	=ES+S/165.1	net commutation inductor	für MM4 - 2,2 - 3kW	6SE6400-3CC01-0BD3	Siemens
TN2.40	200031768	ESIZ4203	1	=ES+S/166.1	net commutation inductor	für MM4 - 2,2 - 3kW	6SE6400-3CC01-0BD3	Siemens
TN2.41	200031768	ESIZ4203	1	=ES+S/168.1	net commutation inductor	für MM4 - 2,2 - 3kW	6SE6400-3CC01-0BD3	Siemens
TN2.42	200031768	ESIZ4203	1	=ES+S/169.1	net commutation inductor	für MM4 - 2,2 - 3kW	6SE6400-3CC01-0BD3	Siemens
TN2.43	200031768	ESIZ4203	1	=ES+S/170.1	net commutation inductor	für MM4 - 2,2 - 3kW	6SE6400-3CC01-0BD3	Siemens
TN2.44	200031768	ESIZ4203	1	=ES+S/171.1	net commutation inductor	für MM4 - 2,2 - 3kW	6SE6400-3CC01-0BD3	Siemens
TN2.45	200031768	ESIZ4203	1	=ES+S/172.1	net commutation inductor	für MM4 - 2,2 - 3kW	6SE6400-3CC01-0BD3	Siemens
TN2.46	200031768	ESIZ4203	1	=ES+S/173.1	net commutation inductor	für MM4 - 2,2 - 3kW	6SE6400-3CC01-0BD3	Siemens
TN2.47	200031768	ESIZ4203	1	=ES+S/175.1	net commutation inductor	für MM4 - 2,2 - 3kW	6SE6400-3CC01-0BD3	Siemens
TN2.48	200031768	ESIZ4203	1	=ES+S/176.1	net commutation inductor	für MM4 - 2,2 - 3kW	6SE6400-3CC01-0BD3	Siemens
TN2.49	200031768	ESIZ4203	1	=ES+S/177.1	net commutation inductor	für MM4 - 2,2 - 3kW	6SE6400-3CC01-0BD3	Siemens
TN2.50	200031768	ESIZ4203	1	=ES+S/178.1	net commutation inductor	für MM4 - 2,2 - 3kW	6SE6400-3CC01-0BD3	Siemens
TN2.51	200031768	ESIZ4203	1	=ES+S/179.1	net commutation inductor	für MM4 - 2,2 - 3kW	6SE6400-3CC01-0BD3	Siemens
TN2.52	200031768	ESIZ4203	1	=ES+S/180.1	net commutation inductor	für MM4 - 2,2 - 3kW	6SE6400-3CC01-0BD3	Siemens
TN2.53	200031768	ESIZ4203	1	=ES+S/182.1	net commutation inductor	für MM4 - 2,2 - 3kW	6SE6400-3CC01-0BD3	Siemens
TN2.54	200031768	ESIZ4203	1	=ES+S/183.1	net commutation inductor	für MM4 - 2,2 - 3kW	6SE6400-3CC01-0BD3	Siemens
TN2.55	200031768	ESIZ4203	1	=ES+S/184.1	net commutation inductor	für MM4 - 2,2 - 3kW	6SE6400-3CC01-0BD3	Siemens
TN2.56	200031768	ESIZ4203	1	=ES+S/185.1	net commutation inductor	für MM4 - 2,2 - 3kW	6SE6400-3CC01-0BD3	Siemens
TN2.57	200031768	ESIZ4203	1	=ES+S/186.1	net commutation inductor	für MM4 - 2,2 - 3kW	6SE6400-3CC01-0BD3	Siemens
TN2.58	200031768	ESIZ4203	1	=ES+S/187.1	net commutation inductor	für MM4 - 2,2 - 3kW	6SE6400-3CC01-0BD3	Siemens
TN2.59	200031768	ESIZ4203	1	=ES+S/189.1	net commutation inductor	für MM4 - 2,2 - 3kW	6SE6400-3CC01-0BD3	Siemens
TN2.60	200031768	ESIZ4203	1	=ES+S/190.1	net commutation inductor	für MM4 - 2,2 - 3kW	6SE6400-3CC01-0BD3	Siemens
TN2.61	200031768	ESIZ4203	1	=ES+S/191.1	net commutation inductor	für MM4 - 2,2 - 3kW	6SE6400-3CC01-0BD3	Siemens
TN2.62	200031768	ESIZ4203	1	=ES+S/192.1	net commutation inductor	für MM4 - 2,2 - 3kW	6SE6400-3CC01-0BD3	Siemens
TN2.63	200031768	ESIZ4203	1	=ES+S/193.1	net commutation inductor	für MM4 - 2,2 - 3kW	6SE6400-3CC01-0BD3	Siemens
TN9	200031769	ESIZ4237	1	=ES+S/200.1	net commutation inductor	für MM4 - 30 - 37kW	6SE6400-3CC08-3ED0	Siemens
TN10	200031769	ESIZ4237	1	=ES+S/201.1	net commutation inductor	für MM4 - 30 - 37kW	6SE6400-3CC08-3ED0	Siemens
TN11	200031769	ESIZ4237	1	=ES+S/202.1	net commutation inductor	für MM4 - 30 - 37kW	6SE6400-3CC08-3ED0	Siemens
TN12	200031769	ESIZ4237	1	=ES+S/203.1	net commutation inductor	für MM4 - 30 - 37kW	6SE6400-3CC08-3ED0	Siemens
TN13	200031769	ESIZ4237	1	=ES+S/204.1	net commutation inductor	für MM4 - 30 - 37kW	6SE6400-3CC08-3ED0	Siemens
TN14	200031769	ESIZ4237	1	=ES+S/205.1	net commutation inductor	für MM4 - 30 - 37kW	6SE6400-3CC08-3ED0	Siemens
TN15	200031769	ESIZ4237	1	=ES+S/206.1	net commutation inductor	für MM4 - 30 - 37kW	6SE6400-3CC08-3ED0	Siemens
TN16	200031769	ESIZ4237	1	=ES+S/207.1	net commutation inductor	für MM4 - 30 - 37kW	6SE6400-3CC08-3ED0	Siemens
TSA2	200011204	ESIT3924	1	=ES+S/65.1	Power supply unit	SITOP Modular ger. Sec.: 24 V/DC / 40A	6 EP 1437-3BA00	Siemens
TSA3	200011204	ESIT3924	1	=ES+S/130.1	Power supply unit	SITOP Modular ger. Sec.: 24 V/DC / 40A	6 EP 1437-3BA00	Siemens
TSA4	200011204	ESIT3924	1	=ES+S/194.1	Power supply unit	SITOP Modular ger. Sec.: 24 V/DC / 40A	6 EP 1437-3BA00	Siemens
TST1	200011204	ESIT3924	1	=ES+S/215.1	Power supply unit	SITOP Modular ger. Sec.: 24 V/DC / 40A	6 EP 1437-3BA00	Siemens
TST2	200011204	ESIT3924	1	=ES+S/217.1	Power supply unit	SITOP Modular ger. Sec.: 24 V/DC / 40A	6 EP 1437-3BA00	Siemens

Parts list

electrical construction

Artilelstückliste_Elo_SAP_001

DT	Part number new	Part number old	Quantity	Placement	Designation 1	Designation 2	Order number	Manufacturer
XCB1	200010334	ESIA7048	1	=ES+S/262.0	connection box	DP für Mobiles Panel	6AV 6671-5AE10-0AX0	Siemens
XKK1	200009860	ESAA0462L	1	=AP+BDP/7.4	Enclosure	HxBxT 600x400x200 RAL 7035	Nr. 83026	Sarel
XL1	200005258	EBHX3201	1	=ES+S/211.2	Female receptacle	16 A 2 polig AB	X 129	Z & A
XL3.11	200005258	EBHX3201	1	=ES+S/211.1	Female receptacle	16 A 2 polig AB	X 129	Z & A
XL3.12	200005258	EBHX3201	1	=ES+S/211.2	Female receptacle	16 A 2 polig AB	X 129	Z & A
XLK1	200005258	EBHX3201	1	=ES+S/219.0	Female receptacle	16 A 2 polig AB	X 129	Z & A
XLK2	200005258	EBHX3201	1	=ES+S/219.1	Female receptacle	16 A 2 polig AB	X 129	Z & A
XLK3	200005258	EBHX3201	1	=ES+S/219.2	Female receptacle	16 A 2 polig AB	X 129	Z & A
XLK4	200005258	EBHX3201	1	=ES+S/219.3	Female receptacle	16 A 2 polig AB	X 129	Z & A
XLKO1	200031234	ERIA0117	1	=ES+S/220.1	multiple socket	5-fach für 19"-Ebene	DK 7240.230	Rittal

Parts list mechanical construction

Artikelstückliste_Mech_SAP_001

DT	Part number new	Part number old	Quantity	Placement	Designation 1	Designation 2	Order number	Manufacturer
AEW384	200008645	EOPA9001	1	=ES+S/309.1	temperature sensor	Pyrometer 85°C	3874360	Optron
AEW386	200008645	EOPA9001	1	=ES+S/309.3	temperature sensor	Pyrometer 85°C	3874360	Optron
AEW388	200008645	EOPA9001	1	=ES+S/309.4	temperature sensor	Pyrometer 85°C	3874360	Optron
AEW392	200008646	EOPA9002	1	=ES+S/310.1	temperature sensor	Pyrometer 180°C	3874550	Optron
AEW394	200008646	EOPA9002	1	=ES+S/310.3	temperature sensor	Pyrometer 180°C	3874550	Optron
AEW396	200008646	EOPA9002	1	=ES+S/310.4	temperature sensor	Pyrometer 180°C	3874550	Optron
AH1	200008200	ELZS0003	1	=ES+S/263.0	measurement parts Height Control	Quattro-DP	670002	Leuze
B9	200012494	ETES0450	1	=ES+S/267.0	safety limit switch	2Ö/1S	XCS-A701	Schneider
B9	200012483	ETES0417	1	=ES+S/267.0	Operating element	auslenkbar	XCS-Z 03	Schneider
B10	200012494	ETES0450	1	=ES+S/267.2	safety limit switch	2Ö/1S	XCS-A701	Schneider
B10	200012483	ETES0417	1	=ES+S/267.2	Operating element	auslenkbar	XCS-Z 03	Schneider
B11	200012494	ETES0450	1	=ES+S/267.3	safety limit switch	2Ö/1S	XCS-A701	Schneider
B11	200012483	ETES0417	1	=ES+S/267.3	Operating element	auslenkbar	XCS-Z 03	Schneider
B12	200012494	ETES0450	1	=ES+S/267.5	safety limit switch	2Ö/1S	XCS-A701	Schneider
B12	200012483	ETES0417	1	=ES+S/267.5	Operating element	auslenkbar	XCS-Z 03	Schneider
B13	200012494	ETES0450	1	=ES+S/268.0	safety limit switch	2Ö/1S	XCS-A701	Schneider
B13	200012483	ETES0417	1	=ES+S/268.0	Operating element	auslenkbar	XCS-Z 03	Schneider
B14	200012494	ETES0450	1	=ES+S/268.2	safety limit switch	2Ö/1S	XCS-A701	Schneider
B14	200012483	ETES0417	1	=ES+S/268.2	Operating element	auslenkbar	XCS-Z 03	Schneider
B15	200012494	ETES0450	1	=ES+S/268.3	safety limit switch	2Ö/1S	XCS-A701	Schneider
B15	200012483	ETES0417	1	=ES+S/268.3	Operating element	auslenkbar	XCS-Z 03	Schneider
B16	200012494	ETES0450	1	=ES+S/268.5	safety limit switch	2Ö/1S	XCS-A701	Schneider
B16	200012483	ETES0417	1	=ES+S/268.5	Operating element	auslenkbar	XCS-Z 03	Schneider
BE63.0	200006186	EFES0012	1	=ES+S/343.1	pressure switch	PEV-1/4-B	10773	FESTO
BE70.0	200004798	EBFS9664	1	=ES+S/346.1	Sensor capacitive	10-30 VDC (Ö/S)	BCS-M30-KM7-PPH15G-S04U	Balluff
BE70.1	200004798	EBFS9664	1	=ES+S/346.5	Sensor capacitive	10-30 VDC (Ö/S)	BCS-M30-KM7-PPH15G-S04U	Balluff
BE70.3	200004790	EBFS9641	1	=ES+S/346.6	Sensor inductive	24 VDC,sn=8mm, Schließer	BESM18MI-PSC80B-S04K	Balluff
BE70.4	200004790	EBFS9641	1	=ES+S/347.1	Sensor inductive	24 VDC,sn=8mm, Schließer	BESM18MI-PSC80B-S04K	Balluff
BE70.5	200004790	EBFS9641	1	=ES+S/347.5	Sensor inductive	24 VDC,sn=8mm, Schließer	BESM18MI-PSC80B-S04K	Balluff
BE70.6	200004790	EBFS9641	1	=ES+S/347.1	Sensor inductive	24 VDC,sn=8mm, Schließer	BESM18MI-PSC80B-S04K	Balluff
BE70.7	200004790	EBFS9641	1	=ES+S/347.6	Sensor inductive	24 VDC,sn=8mm, Schließer	BESM18MI-PSC80B-S04K	Balluff
BE71.0	200004790	EBFS9641	1	=ES+S/348.1	Sensor inductive	24 VDC,sn=8mm, Schließer	BESM18MI-PSC80B-S04K	Balluff
BE71.1	200004790	EBFS9641	1	=ES+S/348.5	Sensor inductive	24 VDC,sn=8mm, Schließer	BESM18MI-PSC80B-S04K	Balluff
BE71.2	200004790	EBFS9641	1	=ES+S/348.1	Sensor inductive	24 VDC,sn=8mm, Schließer	BESM18MI-PSC80B-S04K	Balluff
BE71.3	200004790	EBFS9641	1	=ES+S/348.6	Sensor inductive	24 VDC,sn=8mm, Schließer	BESM18MI-PSC80B-S04K	Balluff
BE71.41	200008209	ELZS1001	1	=ES+S/349.0	Light barrier	Sender	50107888	Leuze
BE71.42	200008210	ELZS1002	1	=ES+S/349.1	Light barrier	Empfänger	50107888-01	Leuze
BE71.51	200008209	ELZS1001	1	=ES+S/349.5	Light barrier	Sender	50107888	Leuze

Parts list mechanical construction

Artikelstückliste_Mech_SAP_001

DT	Part number new	Part number old	Quantity	Placement	Designation 1	Designation 2	Order number	Manufacturer
BE71.52	200008210	ELZS1002	1	=ES+S/349.5	Light barrier	Empfänger	50107888-01	Leuze
BE71.61	200008209	ELZS1001	1	=ES+S/349.1	Light barrier	Sender	50107888	Leuze
BE71.62	200008210	ELZS1002	1	=ES+S/349.1	Light barrier	Empfänger	50107888-01	Leuze
BE72.0	200011002	ESIS0493	1	=ES+S/350.1	position switch	3 SE 5112-0CH50	3 SE 5112-0CH50	Siemens
BE72.1	200011002	ESIS0493	1	=ES+S/350.5	position switch	3 SE 5112-0CH50	3 SE 5112-0CH50	Siemens
BE72.2	200011002	ESIS0493	1	=ES+S/350.1	position switch	3 SE 5112-0CH50	3 SE 5112-0CH50	Siemens
BE72.4	200011140	ESIS9607	1	=ES+S/351.1	ultrasonic sensor	M12 / 1S / 3 Leiter 15-34 VDC	3RG6343-3AB00	Siemens
BE72.5	200011140	ESIS9607	1	=ES+S/351.5	ultrasonic sensor	M12 / 1S / 3 Leiter 15-34 VDC	3RG6343-3AB00	Siemens
BE72.6	200011140	ESIS9607	1	=ES+S/351.1	ultrasonic sensor	M12 / 1S / 3 Leiter 15-34 VDC	3RG6343-3AB00	Siemens
BE72.7	200011176	ESIS9645	1	=ES+S/351.6	Proximity switch inductive	BERO kubisch 60x80mm (Ö/S , pnp)	3RG4142-6AD00	Siemens
BE74.3	200011176	ESIS9645	1	=ES+S/354.6	Proximity switch inductive	BERO kubisch 60x80mm (Ö/S , pnp)	3RG4142-6AD00	Siemens
BE80.0	200011176	ESIS9645	1	=ES+S/363.1	Proximity switch inductive	BERO kubisch 60x80mm (Ö/S , pnp)	3RG4142-6AD00	Siemens
BE80.4	200011176	ESIS9645	1	=ES+S/364.1	Proximity switch inductive	BERO kubisch 60x80mm (Ö/S , pnp)	3RG4142-6AD00	Siemens
BE80.5	200011176	ESIS9645	1	=ES+S/364.5	Proximity switch inductive	BERO kubisch 60x80mm (Ö/S , pnp)	3RG4142-6AD00	Siemens
BE80.6	200028836	ELZS9602	1	=ES+S/364.1	light sensor	HRT 46B/44-S12	50106546	Leuze
BE80.7	200028836	ELZS9602	1	=ES+S/364.6	light sensor	HRT 46B/44-S12	50106546	Leuze
BE80.11	200008209	ELZS1001	1	=ES+S/363.5	Light barrier	Sender	50107888	Leuze
BE80.12	200008210	ELZS1002	1	=ES+S/363.5	Light barrier	Empfänger	50107888-01	Leuze
BE80.21	200008209	ELZS1001	1	=ES+S/363.1	Light barrier	Sender	50107888	Leuze
BE80.22	200008210	ELZS1002	1	=ES+S/363.1	Light barrier	Empfänger	50107888-01	Leuze
BE80.31	200008209	ELZS1001	1	=ES+S/363.5	Light barrier	Sender	50107888	Leuze
BE80.32	200008210	ELZS1002	1	=ES+S/363.6	Light barrier	Empfänger	50107888-01	Leuze
BE81.0	200011176	ESIS9645	1	=ES+S/365.1	Proximity switch inductive	BERO kubisch 60x80mm (Ö/S , pnp)	3RG4142-6AD00	Siemens
BE81.1	200011176	ESIS9645	1	=ES+S/365.5	Proximity switch inductive	BERO kubisch 60x80mm (Ö/S , pnp)	3RG4142-6AD00	Siemens
BE81.2	200011176	ESIS9645	1	=ES+S/365.1	Proximity switch inductive	BERO kubisch 60x80mm (Ö/S , pnp)	3RG4142-6AD00	Siemens
BE81.3	200011176	ESIS9645	1	=ES+S/365.6	Proximity switch inductive	BERO kubisch 60x80mm (Ö/S , pnp)	3RG4142-6AD00	Siemens
BE81.4	200011176	ESIS9645	1	=ES+S/366.1	Proximity switch inductive	BERO kubisch 60x80mm (Ö/S , pnp)	3RG4142-6AD00	Siemens
BE81.5	200011176	ESIS9645	1	=ES+S/366.5	Proximity switch inductive	BERO kubisch 60x80mm (Ö/S , pnp)	3RG4142-6AD00	Siemens
BE81.6	200011176	ESIS9645	1	=ES+S/366.1	Proximity switch inductive	BERO kubisch 60x80mm (Ö/S , pnp)	3RG4142-6AD00	Siemens
BE81.7	200011176	ESIS9645	1	=ES+S/366.6	Proximity switch inductive	BERO kubisch 60x80mm (Ö/S , pnp)	3RG4142-6AD00	Siemens
BE90.01	200008209	ELZS1001	1	=ES+S/368.0	Light barrier	Sender	50107888	Leuze
BE90.02	200008210	ELZS1002	1	=ES+S/368.1	Light barrier	Empfänger	50107888-01	Leuze
BE90.4	200028836	ELZS9602	1	=ES+S/369.1	light sensor	HRT 46B/44-S12	50106546	Leuze
BE90.5	200028836	ELZS9602	1	=ES+S/369.5	light sensor	HRT 46B/44-S12	50106546	Leuze
BE90.6	200028836	ELZS9602	1	=ES+S/369.1	light sensor	HRT 46B/44-S12	50106546	Leuze
BE90.11	200008209	ELZS1001	1	=ES+S/368.5	Light barrier	Sender	50107888	Leuze
BE90.12	200008210	ELZS1002	1	=ES+S/368.5	Light barrier	Empfänger	50107888-01	Leuze
BE90.21	200008209	ELZS1001	1	=ES+S/368.1	Light barrier	Sender	50107888	Leuze

Parts list mechanical construction

Artikelstückliste_Mech_SAP_001

DT	Part number new	Part number old	Quantity	Placement	Designation 1	Designation 2	Order number	Manufacturer
BE90.22	200008210	ELZS1002	1	=ES+S/368.1	Light barrier	Empfänger	50107888-01	Leuze
BE90.31	200008209	ELZS1001	1	=ES+S/368.5	Light barrier	Sender	50107888	Leuze
BE90.32	200008210	ELZS1002	1	=ES+S/368.6	Light barrier	Empfänger	50107888-01	Leuze
BE90.71	200008209	ELZS1001	1	=ES+S/369.5	Light barrier	Sender	50107888	Leuze
BE90.72	200008210	ELZS1002	1	=ES+S/369.6	Light barrier	Empfänger	50107888-01	Leuze
BE91.01	200008209	ELZS1001	1	=ES+S/370.0	Light barrier	Sender	50107888	Leuze
BE91.02	200008210	ELZS1002	1	=ES+S/370.1	Light barrier	Empfänger	50107888-01	Leuze
BE93.0	200011176	ESIS9645	1	=ES+S/373.1	Proximity switch inductive	BERO kubisch 60x80mm (Ö/S , pnp)	3RG4142-6AD00	Siemens
BE93.1	200011176	ESIS9645	1	=ES+S/373.5	Proximity switch inductive	BERO kubisch 60x80mm (Ö/S , pnp)	3RG4142-6AD00	Siemens
BE93.2	200011176	ESIS9645	1	=ES+S/373.1	Proximity switch inductive	BERO kubisch 60x80mm (Ö/S , pnp)	3RG4142-6AD00	Siemens
BE93.3	200011176	ESIS9645	1	=ES+S/373.6	Proximity switch inductive	BERO kubisch 60x80mm (Ö/S , pnp)	3RG4142-6AD00	Siemens
BE336	200006850	EIFA9007	1	=ES+S/299.2	encoder	Vollwelle 10mm	RV6001	IFM
BE336	200006788	EIFA0041	1	=ES+S/299.2	mounting accessories	Winkel für Drehgeber RV, RMV	Nr. E 60035	IFM
BE336	200006790	EIFA0043	1	=ES+S/299.2	Coupling	beidseitig d=10mm	Nr. E 60118	IFM
BE338	200006850	EIFA9007	1	=ES+S/299.4	encoder	Vollwelle 10mm	RV6001	IFM
BE338	200006788	EIFA0041	1	=ES+S/299.4	mounting accessories	Winkel für Drehgeber RV, RMV	Nr. E 60035	IFM
BE338	200006790	EIFA0043	1	=ES+S/299.4	Coupling	beidseitig d=10mm	Nr. E 60118	IFM
BHE1	200008203	ELZS0006	1	=ES+S/263.6	measurement parts Height receiver	Konturflex KR10-640	672064	Leuze
BHE1	200008201	ELZS0004	1	=ES+S/263.6	measurement parts Height Cable	CB-M12-20000S-5GF/GM	678032	Leuze
BHS1	200008202	ELZS0005	1	=ES+S/263.4	measurement parts Height transmitter	Konturflex KT10-640	673064	Leuze
BHS1	200008201	ELZS0004	1	=ES+S/263.4	measurement parts Height Cable	CB-M12-20000S-5GF/GM	678032	Leuze
BT1	200012562	ETES4450	1	=ES+S/277.3	safety limit switch	24 V/UC - stromlos verriegelt	XCS-E7311	Schneider
BT1	200012483	ETES0417	1	=ES+S/277.3	Operating element	auslenkbar	XCS-Z 03	Schneider
BT5	200012562	ETES4450	1	=ES+S/278.5	safety limit switch	24 V/UC - stromlos verriegelt	XCS-E7311	Schneider
BT5	200012483	ETES0417	1	=ES+S/278.5	Operating element	auslenkbar	XCS-Z 03	Schneider
BT6	200012562	ETES4450	1	=ES+S/278.7	safety limit switch	24 V/UC - stromlos verriegelt	XCS-E7311	Schneider
BT6	200012483	ETES0417	1	=ES+S/278.7	Operating element	auslenkbar	XCS-Z 03	Schneider
KP60.0	200006181	EFEA9001	1	=ES+S/337.1	solenoid	MSFG-24/42-50/60-OD	Nr.: 34411	FESTO
KP60.1	200006181	EFEA9001	1	=ES+S/337.5	solenoid	MSFG-24/42-50/60-OD	Nr.: 34411	FESTO
KP60.2	200006181	EFEA9001	1	=ES+S/337.1	solenoid	MSFG-24/42-50/60-OD	Nr.: 34411	FESTO
KP60.3	200006181	EFEA9001	1	=ES+S/337.6	solenoid	MSFG-24/42-50/60-OD	Nr.: 34411	FESTO
KP60.4	200006181	EFEA9001	1	=ES+S/338.1	solenoid	MSFG-24/42-50/60-OD	Nr.: 34411	FESTO
KP60.5	200006181	EFEA9001	1	=ES+S/338.5	solenoid	MSFG-24/42-50/60-OD	Nr.: 34411	FESTO
KP61.0	200006181	EFEA9001	1	=ES+S/339.1	solenoid	MSFG-24/42-50/60-OD	Nr.: 34411	FESTO
KP61.1	200006181	EFEA9001	1	=ES+S/339.5	solenoid	MSFG-24/42-50/60-OD	Nr.: 34411	FESTO
KP61.2	200006181	EFEA9001	1	=ES+S/339.1	solenoid	MSFG-24/42-50/60-OD	Nr.: 34411	FESTO
KP61.3	200006181	EFEA9001	1	=ES+S/339.6	solenoid	MSFG-24/42-50/60-OD	Nr.: 34411	FESTO
KP61.4	200006181	EFEA9001	1	=ES+S/340.1	solenoid	MSFG-24/42-50/60-OD	Nr.: 34411	FESTO

Parts list

mechanical construction

Artikelstückliste_Mech_SAP_001

DT	Part number new	Part number old	Quantity	Placement	Designation 1	Designation 2	Order number	Manufacturer
KP61.5	200006181	EFEA9001	1	=ES+S/340.5	solenoid	MSFG-24/42-50/60-OD	Nr.: 34411	FESTO
KP61.6	200006181	EFEA9001	1	=ES+S/340.1	solenoid	MSFG-24/42-50/60-OD	Nr.: 34411	FESTO
KP61.7	200006181	EFEA9001	1	=ES+S/340.6	solenoid	MSFG-24/42-50/60-OD	Nr.: 34411	FESTO
M1.1	200001607	AEKE0206	1	=ES+S/3.1	Three-phase motor	Kegelstirnradgetriebemotor	SK9032.1AZD-90S/4 TF F	Getriebebau Nord
M1.2	200001607	AEKE0206	1	=ES+S/4.1	Three-phase motor	Kegelstirnradgetriebemotor	SK9032.1AZD-90S/4 TF F	Getriebebau Nord
M1.3	200001607	AEKE0206	1	=ES+S/5.1	Three-phase motor	Kegelstirnradgetriebemotor	SK9032.1AZD-90S/4 TF F	Getriebebau Nord
M1.4	200001607	AEKE0206	1	=ES+S/6.1	Three-phase motor	Kegelstirnradgetriebemotor	SK9032.1AZD-90S/4 TF F	Getriebebau Nord
M1.5	200001607	AEKE0206	1	=ES+S/7.1	Three-phase motor	Kegelstirnradgetriebemotor	SK9032.1AZD-90S/4 TF F	Getriebebau Nord
M1.6	200001607	AEKE0206	1	=ES+S/8.1	Three-phase motor	Kegelstirnradgetriebemotor	SK9032.1AZD-90S/4 TF F	Getriebebau Nord
M1.7	200001607	AEKE0206	1	=ES+S/10.1	Three-phase motor	Kegelstirnradgetriebemotor	SK9032.1AZD-90S/4 TF F	Getriebebau Nord
M1.8	200001607	AEKE0206	1	=ES+S/11.1	Three-phase motor	Kegelstirnradgetriebemotor	SK9032.1AZD-90S/4 TF F	Getriebebau Nord
M1.9	200001607	AEKE0206	1	=ES+S/12.1	Three-phase motor	Kegelstirnradgetriebemotor	SK9032.1AZD-90S/4 TF F	Getriebebau Nord
M1.10	200001607	AEKE0206	1	=ES+S/13.1	Three-phase motor	Kegelstirnradgetriebemotor	SK9032.1AZD-90S/4 TF F	Getriebebau Nord
M1.11	200001607	AEKE0206	1	=ES+S/14.1	Three-phase motor	Kegelstirnradgetriebemotor	SK9032.1AZD-90S/4 TF F	Getriebebau Nord
M1.12	200001607	AEKE0206	1	=ES+S/15.1	Three-phase motor	Kegelstirnradgetriebemotor	SK9032.1AZD-90S/4 TF F	Getriebebau Nord
M1.13	200001607	AEKE0206	1	=ES+S/17.1	Three-phase motor	Kegelstirnradgetriebemotor	SK9032.1AZD-90S/4 TF F	Getriebebau Nord
M1.14	200001607	AEKE0206	1	=ES+S/18.1	Three-phase motor	Kegelstirnradgetriebemotor	SK9032.1AZD-90S/4 TF F	Getriebebau Nord
M1.15	200001607	AEKE0206	1	=ES+S/19.1	Three-phase motor	Kegelstirnradgetriebemotor	SK9032.1AZD-90S/4 TF F	Getriebebau Nord
M1.16	200001607	AEKE0206	1	=ES+S/20.1	Three-phase motor	Kegelstirnradgetriebemotor	SK9032.1AZD-90S/4 TF F	Getriebebau Nord
M1.17	200001607	AEKE0206	1	=ES+S/21.1	Three-phase motor	Kegelstirnradgetriebemotor	SK9032.1AZD-90S/4 TF F	Getriebebau Nord
M1.18	200001607	AEKE0206	1	=ES+S/22.1	Three-phase motor	Kegelstirnradgetriebemotor	SK9032.1AZD-90S/4 TF F	Getriebebau Nord
M1.19	200001607	AEKE0206	1	=ES+S/24.1	Three-phase motor	Kegelstirnradgetriebemotor	SK9032.1AZD-90S/4 TF F	Getriebebau Nord
M1.20	200001607	AEKE0206	1	=ES+S/25.1	Three-phase motor	Kegelstirnradgetriebemotor	SK9032.1AZD-90S/4 TF F	Getriebebau Nord
M1.21	200001607	AEKE0206	1	=ES+S/26.1	Three-phase motor	Kegelstirnradgetriebemotor	SK9032.1AZD-90S/4 TF F	Getriebebau Nord
M1.22	200001607	AEKE0206	1	=ES+S/27.1	Three-phase motor	Kegelstirnradgetriebemotor	SK9032.1AZD-90S/4 TF F	Getriebebau Nord
M1.23	200001607	AEKE0206	1	=ES+S/28.1	Three-phase motor	Kegelstirnradgetriebemotor	SK9032.1AZD-90S/4 TF F	Getriebebau Nord
M1.24	200001607	AEKE0206	1	=ES+S/29.1	Three-phase motor	Kegelstirnradgetriebemotor	SK9032.1AZD-90S/4 TF F	Getriebebau Nord
M1.25	200001607	AEKE0206	1	=ES+S/31.1	Three-phase motor	Kegelstirnradgetriebemotor	SK9032.1AZD-90S/4 TF F	Getriebebau Nord
M1.26	200001607	AEKE0206	1	=ES+S/32.1	Three-phase motor	Kegelstirnradgetriebemotor	SK9032.1AZD-90S/4 TF F	Getriebebau Nord
M1.27	200001607	AEKE0206	1	=ES+S/33.1	Three-phase motor	Kegelstirnradgetriebemotor	SK9032.1AZD-90S/4 TF F	Getriebebau Nord
M1.28	200001607	AEKE0206	1	=ES+S/34.1	Three-phase motor	Kegelstirnradgetriebemotor	SK9032.1AZD-90S/4 TF F	Getriebebau Nord
M1.29	200001607	AEKE0206	1	=ES+S/35.1	Three-phase motor	Kegelstirnradgetriebemotor	SK9032.1AZD-90S/4 TF F	Getriebebau Nord
M1.30	200001607	AEKE0206	1	=ES+S/36.1	Three-phase motor	Kegelstirnradgetriebemotor	SK9032.1AZD-90S/4 TF F	Getriebebau Nord
M1.31	200001607	AEKE0206	1	=ES+S/38.1	Three-phase motor	Kegelstirnradgetriebemotor	SK9032.1AZD-90S/4 TF F	Getriebebau Nord
M1.32	200001607	AEKE0206	1	=ES+S/39.1	Three-phase motor	Kegelstirnradgetriebemotor	SK9032.1AZD-90S/4 TF F	Getriebebau Nord
M1.33	200001607	AEKE0206	1	=ES+S/40.1	Three-phase motor	Kegelstirnradgetriebemotor	SK9032.1AZD-90S/4 TF F	Getriebebau Nord
M1.34	200001607	AEKE0206	1	=ES+S/41.1	Three-phase motor	Kegelstirnradgetriebemotor	SK9032.1AZD-90S/4 TF F	Getriebebau Nord
M1.35	200001607	AEKE0206	1	=ES+S/42.1	Three-phase motor	Kegelstirnradgetriebemotor	SK9032.1AZD-90S/4 TF F	Getriebebau Nord

Parts list mechanical construction

Artikelstückliste_Mech_SAP_001

DT	Part number new	Part number old	Quantity	Placement	Designation 1	Designation 2	Order number	Manufacturer
M1.36	200001607	AEKE0206	1	=ES+S/43.1	Three-phase motor	Kegelstirnradgetriebemotor	SK9032.1AZD-90S/4 TF F	Getriebebau Nord
M1.37	200001607	AEKE0206	1	=ES+S/45.1	Three-phase motor	Kegelstirnradgetriebemotor	SK9032.1AZD-90S/4 TF F	Getriebebau Nord
M1.38	200001607	AEKE0206	1	=ES+S/46.1	Three-phase motor	Kegelstirnradgetriebemotor	SK9032.1AZD-90S/4 TF F	Getriebebau Nord
M1.39	200001607	AEKE0206	1	=ES+S/47.1	Three-phase motor	Kegelstirnradgetriebemotor	SK9032.1AZD-90S/4 TF F	Getriebebau Nord
M1.40	200001607	AEKE0206	1	=ES+S/48.1	Three-phase motor	Kegelstirnradgetriebemotor	SK9032.1AZD-90S/4 TF F	Getriebebau Nord
M1.41	200001607	AEKE0206	1	=ES+S/49.1	Three-phase motor	Kegelstirnradgetriebemotor	SK9032.1AZD-90S/4 TF F	Getriebebau Nord
M1.42	200001607	AEKE0206	1	=ES+S/50.1	Three-phase motor	Kegelstirnradgetriebemotor	SK9032.1AZD-90S/4 TF F	Getriebebau Nord
M1.43	200001607	AEKE0206	1	=ES+S/52.1	Three-phase motor	Kegelstirnradgetriebemotor	SK9032.1AZD-90S/4 TF F	Getriebebau Nord
M1.44	200001607	AEKE0206	1	=ES+S/53.1	Three-phase motor	Kegelstirnradgetriebemotor	SK9032.1AZD-90S/4 TF F	Getriebebau Nord
M1.45	200001607	AEKE0206	1	=ES+S/54.1	Three-phase motor	Kegelstirnradgetriebemotor	SK9032.1AZD-90S/4 TF F	Getriebebau Nord
M1.46	200001607	AEKE0206	1	=ES+S/55.1	Three-phase motor	Kegelstirnradgetriebemotor	SK9032.1AZD-90S/4 TF F	Getriebebau Nord
M1.47	200001607	AEKE0206	1	=ES+S/56.1	Three-phase motor	Kegelstirnradgetriebemotor	SK9032.1AZD-90S/4 TF F	Getriebebau Nord
M1.48	200001607	AEKE0206	1	=ES+S/57.1	Three-phase motor	Kegelstirnradgetriebemotor	SK9032.1AZD-90S/4 TF F	Getriebebau Nord
M1.49	200001607	AEKE0206	1	=ES+S/59.1	Three-phase motor	Kegelstirnradgetriebemotor	SK9032.1AZD-90S/4 TF F	Getriebebau Nord
M1.50	200001607	AEKE0206	1	=ES+S/60.1	Three-phase motor	Kegelstirnradgetriebemotor	SK9032.1AZD-90S/4 TF F	Getriebebau Nord
M1.51	200001607	AEKE0206	1	=ES+S/61.1	Three-phase motor	Kegelstirnradgetriebemotor	SK9032.1AZD-90S/4 TF F	Getriebebau Nord
M1.52	200001607	AEKE0206	1	=ES+S/62.1	Three-phase motor	Kegelstirnradgetriebemotor	SK9032.1AZD-90S/4 TF F	Getriebebau Nord
M1.53	200001607	AEKE0206	1	=ES+S/63.1	Three-phase motor	Kegelstirnradgetriebemotor	SK9032.1AZD-90S/4 TF F	Getriebebau Nord
M1.54	200001607	AEKE0206	1	=ES+S/64.1	Three-phase motor	Kegelstirnradgetriebemotor	SK9032.1AZD-90S/4 TF F	Getriebebau Nord
M1.55	200001607	AEKE0206	1	=ES+S/68.1	Three-phase motor	Kegelstirnradgetriebemotor	SK9032.1AZD-90S/4 TF F	Getriebebau Nord
M1.56	200001607	AEKE0206	1	=ES+S/69.1	Three-phase motor	Kegelstirnradgetriebemotor	SK9032.1AZD-90S/4 TF F	Getriebebau Nord
M1.57	200001607	AEKE0206	1	=ES+S/70.1	Three-phase motor	Kegelstirnradgetriebemotor	SK9032.1AZD-90S/4 TF F	Getriebebau Nord
M1.58	200001607	AEKE0206	1	=ES+S/71.1	Three-phase motor	Kegelstirnradgetriebemotor	SK9032.1AZD-90S/4 TF F	Getriebebau Nord
M1.59	200001607	AEKE0206	1	=ES+S/72.1	Three-phase motor	Kegelstirnradgetriebemotor	SK9032.1AZD-90S/4 TF F	Getriebebau Nord
M1.60	200001607	AEKE0206	1	=ES+S/73.1	Three-phase motor	Kegelstirnradgetriebemotor	SK9032.1AZD-90S/4 TF F	Getriebebau Nord
M1.61	200001607	AEKE0206	1	=ES+S/75.1	Three-phase motor	Kegelstirnradgetriebemotor	SK9032.1AZD-90S/4 TF F	Getriebebau Nord
M1.62	200001607	AEKE0206	1	=ES+S/76.1	Three-phase motor	Kegelstirnradgetriebemotor	SK9032.1AZD-90S/4 TF F	Getriebebau Nord
M1.63	200001607	AEKE0206	1	=ES+S/77.1	Three-phase motor	Kegelstirnradgetriebemotor	SK9032.1AZD-90S/4 TF F	Getriebebau Nord
M1.64	200001607	AEKE0206	1	=ES+S/78.1	Three-phase motor	Kegelstirnradgetriebemotor	SK9032.1AZD-90S/4 TF F	Getriebebau Nord
M1.65	200001607	AEKE0206	1	=ES+S/79.1	Three-phase motor	Kegelstirnradgetriebemotor	SK9032.1AZD-90S/4 TF F	Getriebebau Nord
M1.66	200001607	AEKE0206	1	=ES+S/80.1	Three-phase motor	Kegelstirnradgetriebemotor	SK9032.1AZD-90S/4 TF F	Getriebebau Nord
M1.67	200001607	AEKE0206	1	=ES+S/82.1	Three-phase motor	Kegelstirnradgetriebemotor	SK9032.1AZD-90S/4 TF F	Getriebebau Nord
M1.68	200001607	AEKE0206	1	=ES+S/83.1	Three-phase motor	Kegelstirnradgetriebemotor	SK9032.1AZD-90S/4 TF F	Getriebebau Nord
M1.69	200001607	AEKE0206	1	=ES+S/84.1	Three-phase motor	Kegelstirnradgetriebemotor	SK9032.1AZD-90S/4 TF F	Getriebebau Nord
M1.70	200001607	AEKE0206	1	=ES+S/85.1	Three-phase motor	Kegelstirnradgetriebemotor	SK9032.1AZD-90S/4 TF F	Getriebebau Nord
M1.71	200001607	AEKE0206	1	=ES+S/86.1	Three-phase motor	Kegelstirnradgetriebemotor	SK9032.1AZD-90S/4 TF F	Getriebebau Nord
M1.72	200001607	AEKE0206	1	=ES+S/87.1	Three-phase motor	Kegelstirnradgetriebemotor	SK9032.1AZD-90S/4 TF F	Getriebebau Nord
M1.73	200001607	AEKE0206	1	=ES+S/89.1	Three-phase motor	Kegelstirnradgetriebemotor	SK9032.1AZD-90S/4 TF F	Getriebebau Nord

Parts list mechanical construction

Artikelstückliste_Mech_SAP_001

DT	Part number new	Part number old	Quantity	Placement	Designation 1	Designation 2	Order number	Manufacturer
M1.74	200001607	AEKE0206	1	=ES+S/90.1	Three-phase motor	Kegelstirnradgetriebemotor	SK9032.1AZD-90S/4 TF F	Getriebebau Nord
M1.75	200001607	AEKE0206	1	=ES+S/91.1	Three-phase motor	Kegelstirnradgetriebemotor	SK9032.1AZD-90S/4 TF F	Getriebebau Nord
M1.76	200001607	AEKE0206	1	=ES+S/92.1	Three-phase motor	Kegelstirnradgetriebemotor	SK9032.1AZD-90S/4 TF F	Getriebebau Nord
M1.77	200001607	AEKE0206	1	=ES+S/93.1	Three-phase motor	Kegelstirnradgetriebemotor	SK9032.1AZD-90S/4 TF F	Getriebebau Nord
M1.78	200001607	AEKE0206	1	=ES+S/94.1	Three-phase motor	Kegelstirnradgetriebemotor	SK9032.1AZD-90S/4 TF F	Getriebebau Nord
M1.79	200001607	AEKE0206	1	=ES+S/96.1	Three-phase motor	Kegelstirnradgetriebemotor	SK9032.1AZD-90S/4 TF F	Getriebebau Nord
M1.80	200001607	AEKE0206	1	=ES+S/97.1	Three-phase motor	Kegelstirnradgetriebemotor	SK9032.1AZD-90S/4 TF F	Getriebebau Nord
M1.81	200001607	AEKE0206	1	=ES+S/98.1	Three-phase motor	Kegelstirnradgetriebemotor	SK9032.1AZD-90S/4 TF F	Getriebebau Nord
M1.82	200001607	AEKE0206	1	=ES+S/99.1	Three-phase motor	Kegelstirnradgetriebemotor	SK9032.1AZD-90S/4 TF F	Getriebebau Nord
M1.83	200001607	AEKE0206	1	=ES+S/100.1	Three-phase motor	Kegelstirnradgetriebemotor	SK9032.1AZD-90S/4 TF F	Getriebebau Nord
M1.84	200001607	AEKE0206	1	=ES+S/101.1	Three-phase motor	Kegelstirnradgetriebemotor	SK9032.1AZD-90S/4 TF F	Getriebebau Nord
M1.85	200001607	AEKE0206	1	=ES+S/103.1	Three-phase motor	Kegelstirnradgetriebemotor	SK9032.1AZD-90S/4 TF F	Getriebebau Nord
M1.86	200001607	AEKE0206	1	=ES+S/104.1	Three-phase motor	Kegelstirnradgetriebemotor	SK9032.1AZD-90S/4 TF F	Getriebebau Nord
M1.87	200001607	AEKE0206	1	=ES+S/105.1	Three-phase motor	Kegelstirnradgetriebemotor	SK9032.1AZD-90S/4 TF F	Getriebebau Nord
M1.88	200001607	AEKE0206	1	=ES+S/106.1	Three-phase motor	Kegelstirnradgetriebemotor	SK9032.1AZD-90S/4 TF F	Getriebebau Nord
M1.89	200001607	AEKE0206	1	=ES+S/107.1	Three-phase motor	Kegelstirnradgetriebemotor	SK9032.1AZD-90S/4 TF F	Getriebebau Nord
M1.90	200001607	AEKE0206	1	=ES+S/108.1	Three-phase motor	Kegelstirnradgetriebemotor	SK9032.1AZD-90S/4 TF F	Getriebebau Nord
M1.91	200001607	AEKE0206	1	=ES+S/110.1	Three-phase motor	Kegelstirnradgetriebemotor	SK9032.1AZD-90S/4 TF F	Getriebebau Nord
M1.92	200001607	AEKE0206	1	=ES+S/111.1	Three-phase motor	Kegelstirnradgetriebemotor	SK9032.1AZD-90S/4 TF F	Getriebebau Nord
M1.93	200001607	AEKE0206	1	=ES+S/112.1	Three-phase motor	Kegelstirnradgetriebemotor	SK9032.1AZD-90S/4 TF F	Getriebebau Nord
M1.95	200002267	AEST0268	1	=ES+S/113.1	Three-phase motor	Stirnradgetriebemotor	SK52F-90S/4 TF F	Getriebebau Nord
M1.97	200001606	AEKE0205	1	=ES+S/114.1	Three-phase motor	Kegelstirnradgetriebemotor	SK9042.1AZD-100LA/4 TF F	Getriebebau Nord
M1.99	200002267	AEST0268	1	=ES+S/115.1	Three-phase motor	Stirnradgetriebemotor	SK52F-90S/4 TF F	Getriebebau Nord
M1.101	200001426	AEFL0075	1	=ES+S/117.1	Three-phase motor	Flachgetriebemotor	SK9382AXG-132M/4TF F IG22K	Getriebebau Nord
M1.102	200001426	AEFL0075	1	=ES+S/118.1	Three-phase motor	Flachgetriebemotor	SK9382AXG-132M/4TF F IG22K	Getriebebau Nord
M2.1	200001607	AEKE0206	1	=ES+S/119.1	Three-phase motor	Kegelstirnradgetriebemotor	SK9032.1AZD-90S/4 TF F	Getriebebau Nord
M2.2	200001607	AEKE0206	1	=ES+S/120.1	Three-phase motor	Kegelstirnradgetriebemotor	SK9032.1AZD-90S/4 TF F	Getriebebau Nord
M2.3	200001607	AEKE0206	1	=ES+S/121.1	Three-phase motor	Kegelstirnradgetriebemotor	SK9032.1AZD-90S/4 TF F	Getriebebau Nord
M2.4	200001607	AEKE0206	1	=ES+S/122.1	Three-phase motor	Kegelstirnradgetriebemotor	SK9032.1AZD-90S/4 TF F	Getriebebau Nord
M2.5	200001607	AEKE0206	1	=ES+S/123.1	Three-phase motor	Kegelstirnradgetriebemotor	SK9032.1AZD-90S/4 TF F	Getriebebau Nord
M2.6	200001607	AEKE0206	1	=ES+S/125.1	Three-phase motor	Kegelstirnradgetriebemotor	SK9032.1AZD-90S/4 TF F	Getriebebau Nord
M2.7	200001607	AEKE0206	1	=ES+S/126.1	Three-phase motor	Kegelstirnradgetriebemotor	SK9032.1AZD-90S/4 TF F	Getriebebau Nord
M2.8	200001607	AEKE0206	1	=ES+S/127.1	Three-phase motor	Kegelstirnradgetriebemotor	SK9032.1AZD-90S/4 TF F	Getriebebau Nord
M2.9	200001607	AEKE0206	1	=ES+S/128.1	Three-phase motor	Kegelstirnradgetriebemotor	SK9032.1AZD-90S/4 TF F	Getriebebau Nord
M2.10	200001607	AEKE0206	1	=ES+S/129.1	Three-phase motor	Kegelstirnradgetriebemotor	SK9032.1AZD-90S/4 TF F	Getriebebau Nord
M2.11	200001607	AEKE0206	1	=ES+S/133.1	Three-phase motor	Kegelstirnradgetriebemotor	SK9032.1AZD-90S/4 TF F	Getriebebau Nord
M2.12	200001607	AEKE0206	1	=ES+S/134.1	Three-phase motor	Kegelstirnradgetriebemotor	SK9032.1AZD-90S/4 TF F	Getriebebau Nord
M2.13	200001607	AEKE0206	1	=ES+S/135.1	Three-phase motor	Kegelstirnradgetriebemotor	SK9032.1AZD-90S/4 TF F	Getriebebau Nord

Parts list mechanical construction

Artikelstückliste_Mech_SAP_001

DT	Part number new	Part number old	Quantity	Placement	Designation 1	Designation 2	Order number	Manufacturer
M2.14	200001607	AEKE0206	1	=ES+S/136.1	Three-phase motor	Kegelstirnradgetriebemotor	SK9032.1AZD-90S/4 TF F	Getriebebau Nord
M2.15	200001607	AEKE0206	1	=ES+S/137.1	Three-phase motor	Kegelstirnradgetriebemotor	SK9032.1AZD-90S/4 TF F	Getriebebau Nord
M2.16	200001607	AEKE0206	1	=ES+S/138.1	Three-phase motor	Kegelstirnradgetriebemotor	SK9032.1AZD-90S/4 TF F	Getriebebau Nord
M2.17	200001607	AEKE0206	1	=ES+S/140.1	Three-phase motor	Kegelstirnradgetriebemotor	SK9032.1AZD-90S/4 TF F	Getriebebau Nord
M2.18	200001607	AEKE0206	1	=ES+S/141.1	Three-phase motor	Kegelstirnradgetriebemotor	SK9032.1AZD-90S/4 TF F	Getriebebau Nord
M2.19	200001607	AEKE0206	1	=ES+S/142.1	Three-phase motor	Kegelstirnradgetriebemotor	SK9032.1AZD-90S/4 TF F	Getriebebau Nord
M2.20	200001607	AEKE0206	1	=ES+S/143.1	Three-phase motor	Kegelstirnradgetriebemotor	SK9032.1AZD-90S/4 TF F	Getriebebau Nord
M2.21	200001607	AEKE0206	1	=ES+S/144.1	Three-phase motor	Kegelstirnradgetriebemotor	SK9032.1AZD-90S/4 TF F	Getriebebau Nord
M2.22	200001607	AEKE0206	1	=ES+S/145.1	Three-phase motor	Kegelstirnradgetriebemotor	SK9032.1AZD-90S/4 TF F	Getriebebau Nord
M2.23	200001607	AEKE0206	1	=ES+S/147.1	Three-phase motor	Kegelstirnradgetriebemotor	SK9032.1AZD-90S/4 TF F	Getriebebau Nord
M2.24	200001607	AEKE0206	1	=ES+S/148.1	Three-phase motor	Kegelstirnradgetriebemotor	SK9032.1AZD-90S/4 TF F	Getriebebau Nord
M2.25	200001607	AEKE0206	1	=ES+S/149.1	Three-phase motor	Kegelstirnradgetriebemotor	SK9032.1AZD-90S/4 TF F	Getriebebau Nord
M2.26	200001607	AEKE0206	1	=ES+S/150.1	Three-phase motor	Kegelstirnradgetriebemotor	SK9032.1AZD-90S/4 TF F	Getriebebau Nord
M2.27	200001607	AEKE0206	1	=ES+S/151.1	Three-phase motor	Kegelstirnradgetriebemotor	SK9032.1AZD-90S/4 TF F	Getriebebau Nord
M2.28	200001607	AEKE0206	1	=ES+S/152.1	Three-phase motor	Kegelstirnradgetriebemotor	SK9032.1AZD-90S/4 TF F	Getriebebau Nord
M2.29	200001607	AEKE0206	1	=ES+S/154.1	Three-phase motor	Kegelstirnradgetriebemotor	SK9032.1AZD-90S/4 TF F	Getriebebau Nord
M2.30	200001607	AEKE0206	1	=ES+S/155.1	Three-phase motor	Kegelstirnradgetriebemotor	SK9032.1AZD-90S/4 TF F	Getriebebau Nord
M2.31	200001607	AEKE0206	1	=ES+S/156.1	Three-phase motor	Kegelstirnradgetriebemotor	SK9032.1AZD-90S/4 TF F	Getriebebau Nord
M2.32	200001607	AEKE0206	1	=ES+S/157.1	Three-phase motor	Kegelstirnradgetriebemotor	SK9032.1AZD-90S/4 TF F	Getriebebau Nord
M2.33	200001607	AEKE0206	1	=ES+S/158.1	Three-phase motor	Kegelstirnradgetriebemotor	SK9032.1AZD-90S/4 TF F	Getriebebau Nord
M2.34	200001607	AEKE0206	1	=ES+S/159.1	Three-phase motor	Kegelstirnradgetriebemotor	SK9032.1AZD-90S/4 TF F	Getriebebau Nord
M2.35	200001607	AEKE0206	1	=ES+S/161.1	Three-phase motor	Kegelstirnradgetriebemotor	SK9032.1AZD-90S/4 TF F	Getriebebau Nord
M2.36	200001607	AEKE0206	1	=ES+S/162.1	Three-phase motor	Kegelstirnradgetriebemotor	SK9032.1AZD-90S/4 TF F	Getriebebau Nord
M2.37	200001607	AEKE0206	1	=ES+S/163.1	Three-phase motor	Kegelstirnradgetriebemotor	SK9032.1AZD-90S/4 TF F	Getriebebau Nord
M2.38	200001607	AEKE0206	1	=ES+S/164.1	Three-phase motor	Kegelstirnradgetriebemotor	SK9032.1AZD-90S/4 TF F	Getriebebau Nord
M2.39	200001607	AEKE0206	1	=ES+S/165.1	Three-phase motor	Kegelstirnradgetriebemotor	SK9032.1AZD-90S/4 TF F	Getriebebau Nord
M2.40	200001607	AEKE0206	1	=ES+S/166.1	Three-phase motor	Kegelstirnradgetriebemotor	SK9032.1AZD-90S/4 TF F	Getriebebau Nord
M2.41	200001607	AEKE0206	1	=ES+S/168.1	Three-phase motor	Kegelstirnradgetriebemotor	SK9032.1AZD-90S/4 TF F	Getriebebau Nord
M2.42	200001607	AEKE0206	1	=ES+S/169.1	Three-phase motor	Kegelstirnradgetriebemotor	SK9032.1AZD-90S/4 TF F	Getriebebau Nord
M2.43	200001607	AEKE0206	1	=ES+S/170.1	Three-phase motor	Kegelstirnradgetriebemotor	SK9032.1AZD-90S/4 TF F	Getriebebau Nord
M2.44	200001607	AEKE0206	1	=ES+S/171.1	Three-phase motor	Kegelstirnradgetriebemotor	SK9032.1AZD-90S/4 TF F	Getriebebau Nord
M2.45	200001607	AEKE0206	1	=ES+S/172.1	Three-phase motor	Kegelstirnradgetriebemotor	SK9032.1AZD-90S/4 TF F	Getriebebau Nord
M2.46	200001607	AEKE0206	1	=ES+S/173.1	Three-phase motor	Kegelstirnradgetriebemotor	SK9032.1AZD-90S/4 TF F	Getriebebau Nord
M2.47	200001607	AEKE0206	1	=ES+S/175.1	Three-phase motor	Kegelstirnradgetriebemotor	SK9032.1AZD-90S/4 TF F	Getriebebau Nord
M2.48	200001607	AEKE0206	1	=ES+S/176.1	Three-phase motor	Kegelstirnradgetriebemotor	SK9032.1AZD-90S/4 TF F	Getriebebau Nord
M2.49	200001607	AEKE0206	1	=ES+S/177.1	Three-phase motor	Kegelstirnradgetriebemotor	SK9032.1AZD-90S/4 TF F	Getriebebau Nord
M2.50	200001607	AEKE0206	1	=ES+S/178.1	Three-phase motor	Kegelstirnradgetriebemotor	SK9032.1AZD-90S/4 TF F	Getriebebau Nord
M2.51	200001607	AEKE0206	1	=ES+S/179.1	Three-phase motor	Kegelstirnradgetriebemotor	SK9032.1AZD-90S/4 TF F	Getriebebau Nord

Parts list mechanical construction

Artikelstückliste_Mech_SAP_001

DT	Part number new	Part number old	Quantity	Placement	Designation 1	Designation 2	Order number	Manufacturer
M2.52	200001607	AEKE0206	1	=ES+S/180.1	Three-phase motor	Kegelstirnradgetriebemotor	SK9032.1AZD-90S/4 TF F	Getriebebau Nord
M2.53	200001607	AEKE0206	1	=ES+S/182.1	Three-phase motor	Kegelstirnradgetriebemotor	SK9032.1AZD-90S/4 TF F	Getriebebau Nord
M2.54	200001607	AEKE0206	1	=ES+S/183.1	Three-phase motor	Kegelstirnradgetriebemotor	SK9032.1AZD-90S/4 TF F	Getriebebau Nord
M2.55	200001607	AEKE0206	1	=ES+S/184.1	Three-phase motor	Kegelstirnradgetriebemotor	SK9032.1AZD-90S/4 TF F	Getriebebau Nord
M2.56	200001607	AEKE0206	1	=ES+S/185.1	Three-phase motor	Kegelstirnradgetriebemotor	SK9032.1AZD-90S/4 TF F	Getriebebau Nord
M2.57	200001607	AEKE0206	1	=ES+S/186.1	Three-phase motor	Kegelstirnradgetriebemotor	SK9032.1AZD-90S/4 TF F	Getriebebau Nord
M2.58	200001607	AEKE0206	1	=ES+S/187.1	Three-phase motor	Kegelstirnradgetriebemotor	SK9032.1AZD-90S/4 TF F	Getriebebau Nord
M2.59	200001607	AEKE0206	1	=ES+S/189.1	Three-phase motor	Kegelstirnradgetriebemotor	SK9032.1AZD-90S/4 TF F	Getriebebau Nord
M2.60	200001607	AEKE0206	1	=ES+S/190.1	Three-phase motor	Kegelstirnradgetriebemotor	SK9032.1AZD-90S/4 TF F	Getriebebau Nord
M2.61	200001607	AEKE0206	1	=ES+S/191.1	Three-phase motor	Kegelstirnradgetriebemotor	SK9032.1AZD-90S/4 TF F	Getriebebau Nord
M2.62	200001607	AEKE0206	1	=ES+S/192.1	Three-phase motor	Kegelstirnradgetriebemotor	SK9032.1AZD-90S/4 TF F	Getriebebau Nord
M2.63	200001607	AEKE0206	1	=ES+S/193.1	Three-phase motor	Kegelstirnradgetriebemotor	SK9032.1AZD-90S/4 TF F	Getriebebau Nord
M3.1	200001853	AESC0292	1	=ES+S/196.1	Three-phase motor	Schneckengetriebemotor	SK12063AZ-90L/4	Getriebebau Nord
M3.2	200001853	AESC0292	1	=ES+S/196.3	Three-phase motor	Schneckengetriebemotor	SK12063AZ-90L/4	Getriebebau Nord
M3.4	200001586	AEKE0185	1	=ES+S/196.4	Three-phase motor	Kegelstirnradgetriebemotor	SK9032.1AZD-132S/4 TF	Getriebebau Nord
M3.5	200001587	AEKE0186	1	=ES+S/196.6	Three-phase motor	Kegelradgetriebemotor	SK9042.1AZD-160L/4 BRE250	Getriebebau Nord
M4.1	200002005	AESC0438	1	=ES+S/197.1	Three-phase motor	Schneckengetriebemotor	SK32100AZ D-112M/4	Getriebebau Nord
M4.2	200001588	AEKE0187	1	=ES+S/197.3	Three-phase motor	Kegelradgetriebemotor	SK9012.1AZD-100LA/4 TF	Getriebebau Nord
M4.3	200002076	AESC0509	1	=ES+S/197.4	Three-phase motor	Schneckengetriebemotor	SK1Si63D-IEC90-90S/4	Getriebebau Nord
M4.4	200001594	AEKE0193	1	=ES+S/197.6	Three-phase motor	Kegelstirnradgetriebemotor	SK9032.1AZD-132S/4 TF	Getriebebau Nord
M7	200016459	GEB00400	1	=ES+S/198.1	Three-phase motor	Radialventilator	GBJ L06360	Cimme
M7.2	200015255	FILT0794	1	=ES+S/198.4	Three-phase motor	Zellenradschleuse	399012.095	Dantherm
M7.4	200002107	AESC0545	1	=ES+S/198.6	Three-phase motor	Schneckengetriebemotor	SK1SIS63D-IEC9090S/4	Getriebebau Nord
M8.1	200016347	GEB00274	1	=ES+S/199.1	Three-phase motor	Radialventilator	GCH 005040	Cimme
M8.2	200016347	GEB00274	1	=ES+S/199.3	Three-phase motor	Radialventilator	GCH 005040	Cimme
M8.3	200002266	AEST0267	1	=ES+S/199.4	Three-phase motor	Stirnradgetriebemotor	SK872-160M/4 TF	Getriebebau Nord
M8.4	200001608	AEKE0207	1	=ES+S/199.6	Three-phase motor	Kegelstirnradgetriebemotor	SK9042.1AX-90L/4 BRE20 TF	Getriebebau Nord
M9	200001240	AED00273	1	=ES+S/200.1	Three-phase motor	Niederspannungsmotor	1LA9207-2WA11-ZA11+G50+Y55	Siemens
M9.1	200018099	HSG00059	1	=ES+S/212.1	AC motor	Hubspindelantrieb	0 W/0 1000-4-85	Framo
M10	200001240	AED00273	1	=ES+S/201.1	Three-phase motor	Niederspannungsmotor	1LA9207-2WA11-ZA11+G50+Y55	Siemens
M10.1	200018099	HSG00059	1	=ES+S/212.3	AC motor	Hubspindelantrieb	0 W/0 1000-4-85	Framo
M11	200001240	AED00273	1	=ES+S/202.1	Three-phase motor	Niederspannungsmotor	1LA9207-2WA11-ZA11+G50+Y55	Siemens
M11.1	200018099	HSG00059	1	=ES+S/212.5	AC motor	Hubspindelantrieb	0 W/0 1000-4-85	Framo
M12	200001240	AED00273	1	=ES+S/203.1	Three-phase motor	Niederspannungsmotor	1LA9207-2WA11-ZA11+G50+Y55	Siemens
M12.1	200018099	HSG00059	1	=ES+S/212.8	AC motor	Hubspindelantrieb	0 W/0 1000-4-85	Framo
M13	200001240	AED00273	1	=ES+S/204.1	Three-phase motor	Niederspannungsmotor	1LA9207-2WA11-ZA11+G50+Y55	Siemens
M13.1	200018099	HSG00059	1	=ES+S/213.1	AC motor	Hubspindelantrieb	0 W/0 1000-4-85	Framo
M14	200001240	AED00273	1	=ES+S/205.1	Three-phase motor	Niederspannungsmotor	1LA9207-2WA11-ZA11+G50+Y55	Siemens

Parts list

mechanical construction

Artikelstückliste_Mech_SAP_001

DT	Part number new	old	Quantity	Placement	Designation 1	Designation 2	Order number	Manufacturer
M14.1	200018099	HSG00059	1	=ES+S/213.3	AC motor	Hubspindelantrieb	0 W/0 1000-4-85	Framo
M15	200001240	AED00273	1	=ES+S/206.1	Three-phase motor	Niederspannungsmotor	1LA9207-2WA11-ZA11+G50+Y55	Siemens
M15.1	200018099	HSG00059	1	=ES+S/213.5	AC motor	Hubspindelantrieb	0 W/0 1000-4-85	Framo
M16	200001240	AED00273	1	=ES+S/207.1	Three-phase motor	Niederspannungsmotor	1LA9207-2WA11-ZA11+G50+Y55	Siemens
M16.1	200018099	HSG00059	1	=ES+S/213.8	AC motor	Hubspindelantrieb	0 W/0 1000-4-85	Framo
M31	200016443	GEB00384	1	=ES+S/208.1	Three-phase motor	Radialventilator	Q2M-M2B4M-WAB-RD	Gebhardt
M41	200018485	HYAG0184	1	=ES+S/209.1	Three-phase motor	Hydraulikaggregat	HPE-16/85-DU/VK6-3	Kottmann
RVW	200007009	EJNR0001	1	=ES+S/360.2	temperature sensor	PT 100	00118872	Jünemann
SN5	200005698	EDKS0002K	1	=ES+S/264.4	cable operated Emergency stop		LHEPw-10/2-BSL	Dittelbach&Kerzler
SN6	200005697	EDKS0001K	1	=ES+S/264.4	cable operated Emergency stop		LHEPw-10/2-BSR	Dittelbach&Kerzler
Schrank0	200009624	ERIA8206L	1	=AP+SA0/1.0	Enclosure	1200 x 2000 x 600	TS 8206.500	Rittal
Schrank0	200009543	ERIA8026	1	=AP+SA0/1.0	base side section	200 x 600	TS 8602.060	Rittal
Schrank0	200009626	ERIA8220	1	=AP+SA0/1.0	base ahead behind	1200 x 200	TS 8602.200	Rittal
Schrank0	200009607	ERIA8106L	1	=AP+SA0/1.0	side panel	2000 x 600 mm	TS 8106.235	Rittal
T7	200015415	FILT1034	1	=ES+S/210.2	Solenoid valve Control	24 Ausgänge	HE 5722	Hesch
WA32.2	200007850	ELAW1120	1	=ES+S/208.4	Cable	12 x 1.0 mm2	1119 212	Lapp
WAH1	200007814	ELAW1030	1	=ES+S/263.0	Cable	3 x 1.0 mm2	1119 203	Lapp
WB9	200007830	ELAW1050	1	=ES+S/267.0	Cable	5 x 1.0 mm2	1119 205	Lapp
WB10	200007830	ELAW1050	1	=ES+S/267.2	Cable	5 x 1.0 mm2	1119 205	Lapp
WB11	200007830	ELAW1050	1	=ES+S/267.3	Cable	5 x 1.0 mm2	1119 205	Lapp
WB12	200007830	ELAW1050	1	=ES+S/267.5	Cable	5 x 1.0 mm2	1119 205	Lapp
WB13	200007830	ELAW1050	1	=ES+S/268.0	Cable	5 x 1.0 mm2	1119 205	Lapp
WB14	200007830	ELAW1050	1	=ES+S/268.2	Cable	5 x 1.0 mm2	1119 205	Lapp
WB15	200007830	ELAW1050	1	=ES+S/268.3	Cable	5 x 1.0 mm2	1119 205	Lapp
WB16	200007830	ELAW1050	1	=ES+S/268.5	Cable	5 x 1.0 mm2	1119 205	Lapp
WBE336	200007890	ELAW2220	1	=ES+S/299.2	Cable	4x2x0,34 mm2	0031327	Lapp
WBE338	200007890	ELAW2220	1	=ES+S/299.4	Cable	4x2x0,34 mm2	0031327	Lapp
WBE400	200007890	ELAW2220	1	=ES+S/311.4	Cable	4x2x0,34 mm2	0031327	Lapp
WM1.1	200007952	ELAW6041	1	=ES+S/3.0	Cable	4 x 1,5 mm²	0036 390	Lapp
WM1.2	200007952	ELAW6041	1	=ES+S/4.0	Cable	4 x 1,5 mm²	0036 390	Lapp
WM1.3	200007952	ELAW6041	1	=ES+S/5.0	Cable	4 x 1,5 mm²	0036 390	Lapp
WM1.4	200007952	ELAW6041	1	=ES+S/6.0	Cable	4 x 1,5 mm²	0036 390	Lapp
WM1.5	200007952	ELAW6041	1	=ES+S/7.0	Cable	4 x 1,5 mm²	0036 390	Lapp
WM1.6	200007952	ELAW6041	1	=ES+S/8.0	Cable	4 x 1,5 mm²	0036 390	Lapp
WM1.7	200007952	ELAW6041	1	=ES+S/10.0	Cable	4 x 1,5 mm²	0036 390	Lapp
WM1.8	200007952	ELAW6041	1	=ES+S/11.0	Cable	4 x 1,5 mm²	0036 390	Lapp
WM1.9	200007952	ELAW6041	1	=ES+S/12.0	Cable	4 x 1,5 mm²	0036 390	Lapp
WM1.10	200007952	ELAW6041	1	=ES+S/13.0	Cable	4 x 1,5 mm²	0036 390	Lapp

Parts list

mechanical construction

Artikelstückliste_Mech_SAP_001

DT	Part number new	Part number old	Quantity	Placement	Designation 1	Designation 2	Order number	Manufacturer
WM1.11	200007952	ELAW6041	1	=ES+S/14.0	Cable	4 x 1,5 mm²	0036 390	Lapp
WM1.12	200007952	ELAW6041	1	=ES+S/15.0	Cable	4 x 1,5 mm²	0036 390	Lapp
WM1.13	200007952	ELAW6041	1	=ES+S/17.0	Cable	4 x 1,5 mm²	0036 390	Lapp
WM1.14	200007952	ELAW6041	1	=ES+S/18.0	Cable	4 x 1,5 mm²	0036 390	Lapp
WM1.15	200007952	ELAW6041	1	=ES+S/19.0	Cable	4 x 1,5 mm²	0036 390	Lapp
WM1.16	200007952	ELAW6041	1	=ES+S/20.0	Cable	4 x 1,5 mm²	0036 390	Lapp
WM1.17	200007952	ELAW6041	1	=ES+S/21.0	Cable	4 x 1,5 mm²	0036 390	Lapp
WM1.18	200007952	ELAW6041	1	=ES+S/22.0	Cable	4 x 1,5 mm²	0036 390	Lapp
WM1.19	200007952	ELAW6041	1	=ES+S/24.0	Cable	4 x 1,5 mm²	0036 390	Lapp
WM1.20	200007952	ELAW6041	1	=ES+S/25.0	Cable	4 x 1,5 mm²	0036 390	Lapp
WM1.21	200007952	ELAW6041	1	=ES+S/26.0	Cable	4 x 1,5 mm²	0036 390	Lapp
WM1.22	200007952	ELAW6041	1	=ES+S/27.0	Cable	4 x 1,5 mm²	0036 390	Lapp
WM1.23	200007952	ELAW6041	1	=ES+S/28.0	Cable	4 x 1,5 mm²	0036 390	Lapp
WM1.24	200007952	ELAW6041	1	=ES+S/29.0	Cable	4 x 1,5 mm²	0036 390	Lapp
WM1.25	200007952	ELAW6041	1	=ES+S/31.0	Cable	4 x 1,5 mm²	0036 390	Lapp
WM1.26	200007952	ELAW6041	1	=ES+S/32.0	Cable	4 x 1,5 mm²	0036 390	Lapp
WM1.27	200007952	ELAW6041	1	=ES+S/33.0	Cable	4 x 1,5 mm²	0036 390	Lapp
WM1.28	200007952	ELAW6041	1	=ES+S/34.0	Cable	4 x 1,5 mm²	0036 390	Lapp
WM1.29	200007952	ELAW6041	1	=ES+S/35.0	Cable	4 x 1,5 mm²	0036 390	Lapp
WM1.30	200007952	ELAW6041	1	=ES+S/36.0	Cable	4 x 1,5 mm²	0036 390	Lapp
WM1.31	200007952	ELAW6041	1	=ES+S/38.0	Cable	4 x 1,5 mm²	0036 390	Lapp
WM1.32	200007952	ELAW6041	1	=ES+S/39.0	Cable	4 x 1,5 mm²	0036 390	Lapp
WM1.33	200007952	ELAW6041	1	=ES+S/40.0	Cable	4 x 1,5 mm²	0036 390	Lapp
WM1.34	200007952	ELAW6041	1	=ES+S/41.0	Cable	4 x 1,5 mm²	0036 390	Lapp
WM1.35	200007952	ELAW6041	1	=ES+S/42.0	Cable	4 x 1,5 mm²	0036 390	Lapp
WM1.36	200007952	ELAW6041	1	=ES+S/43.0	Cable	4 x 1,5 mm²	0036 390	Lapp
WM1.37	200007952	ELAW6041	1	=ES+S/45.0	Cable	4 x 1,5 mm²	0036 390	Lapp
WM1.38	200007952	ELAW6041	1	=ES+S/46.0	Cable	4 x 1,5 mm²	0036 390	Lapp
WM1.39	200007952	ELAW6041	1	=ES+S/47.0	Cable	4 x 1,5 mm²	0036 390	Lapp
WM1.40	200007952	ELAW6041	1	=ES+S/48.0	Cable	4 x 1,5 mm²	0036 390	Lapp
WM1.41	200007952	ELAW6041	1	=ES+S/49.0	Cable	4 x 1,5 mm²	0036 390	Lapp
WM1.42	200007952	ELAW6041	1	=ES+S/50.0	Cable	4 x 1,5 mm²	0036 390	Lapp
WM1.43	200007952	ELAW6041	1	=ES+S/52.0	Cable	4 x 1,5 mm²	0036 390	Lapp
WM1.44	200007952	ELAW6041	1	=ES+S/53.0	Cable	4 x 1,5 mm²	0036 390	Lapp
WM1.45	200007952	ELAW6041	1	=ES+S/54.0	Cable	4 x 1,5 mm²	0036 390	Lapp
WM1.46	200007952	ELAW6041	1	=ES+S/55.0	Cable	4 x 1,5 mm²	0036 390	Lapp
WM1.47	200007952	ELAW6041	1	=ES+S/56.0	Cable	4 x 1,5 mm²	0036 390	Lapp
WM1.48	200007952	ELAW6041	1	=ES+S/57.0	Cable	4 x 1,5 mm²	0036 390	Lapp

Parts list

mechanical construction

Artikelstückliste_Mech_SAP_001

DT	Part number new	Part number old	Quantity	Placement	Designation 1	Designation 2	Order number	Manufacturer
WM1.49	200007952	ELAW6041	1	=ES+S/59.0	Cable	4 x 1,5 mm²	0036 390	Lapp
WM1.50	200007952	ELAW6041	1	=ES+S/60.0	Cable	4 x 1,5 mm²	0036 390	Lapp
WM1.51	200007952	ELAW6041	1	=ES+S/61.0	Cable	4 x 1,5 mm²	0036 390	Lapp
WM1.52	200007952	ELAW6041	1	=ES+S/62.0	Cable	4 x 1,5 mm²	0036 390	Lapp
WM1.53	200007952	ELAW6041	1	=ES+S/63.0	Cable	4 x 1,5 mm²	0036 390	Lapp
WM1.54	200007952	ELAW6041	1	=ES+S/64.0	Cable	4 x 1,5 mm²	0036 390	Lapp
WM1.55	200007952	ELAW6041	1	=ES+S/68.0	Cable	4 x 1,5 mm²	0036 390	Lapp
WM1.56	200007952	ELAW6041	1	=ES+S/69.0	Cable	4 x 1,5 mm²	0036 390	Lapp
WM1.57	200007952	ELAW6041	1	=ES+S/70.0	Cable	4 x 1,5 mm²	0036 390	Lapp
WM1.58	200007952	ELAW6041	1	=ES+S/71.0	Cable	4 x 1,5 mm²	0036 390	Lapp
WM1.59	200007952	ELAW6041	1	=ES+S/72.0	Cable	4 x 1,5 mm²	0036 390	Lapp
WM1.60	200007952	ELAW6041	1	=ES+S/73.0	Cable	4 x 1,5 mm²	0036 390	Lapp
WM1.61	200007952	ELAW6041	1	=ES+S/75.0	Cable	4 x 1,5 mm²	0036 390	Lapp
WM1.62	200007952	ELAW6041	1	=ES+S/76.0	Cable	4 x 1,5 mm²	0036 390	Lapp
WM1.63	200007952	ELAW6041	1	=ES+S/77.0	Cable	4 x 1,5 mm²	0036 390	Lapp
WM1.64	200007952	ELAW6041	1	=ES+S/78.0	Cable	4 x 1,5 mm²	0036 390	Lapp
WM1.65	200007952	ELAW6041	1	=ES+S/79.0	Cable	4 x 1,5 mm²	0036 390	Lapp
WM1.66	200007952	ELAW6041	1	=ES+S/80.0	Cable	4 x 1,5 mm²	0036 390	Lapp
WM1.67	200007952	ELAW6041	1	=ES+S/82.0	Cable	4 x 1,5 mm²	0036 390	Lapp
WM1.68	200007952	ELAW6041	1	=ES+S/83.0	Cable	4 x 1,5 mm²	0036 390	Lapp
WM1.69	200007952	ELAW6041	1	=ES+S/84.0	Cable	4 x 1,5 mm²	0036 390	Lapp
WM1.70	200007952	ELAW6041	1	=ES+S/85.0	Cable	4 x 1,5 mm²	0036 390	Lapp
WM1.71	200007952	ELAW6041	1	=ES+S/86.0	Cable	4 x 1,5 mm²	0036 390	Lapp
WM1.72	200007952	ELAW6041	1	=ES+S/87.0	Cable	4 x 1,5 mm²	0036 390	Lapp
WM1.73	200007952	ELAW6041	1	=ES+S/89.0	Cable	4 x 1,5 mm²	0036 390	Lapp
WM1.74	200007952	ELAW6041	1	=ES+S/90.0	Cable	4 x 1,5 mm²	0036 390	Lapp
WM1.75	200007952	ELAW6041	1	=ES+S/91.0	Cable	4 x 1,5 mm²	0036 390	Lapp
WM1.76	200007952	ELAW6041	1	=ES+S/92.0	Cable	4 x 1,5 mm²	0036 390	Lapp
WM1.77	200007952	ELAW6041	1	=ES+S/93.0	Cable	4 x 1,5 mm²	0036 390	Lapp
WM1.78	200007952	ELAW6041	1	=ES+S/94.0	Cable	4 x 1,5 mm²	0036 390	Lapp
WM1.79	200007952	ELAW6041	1	=ES+S/96.0	Cable	4 x 1,5 mm²	0036 390	Lapp
WM1.80	200007952	ELAW6041	1	=ES+S/97.0	Cable	4 x 1,5 mm²	0036 390	Lapp
WM1.81	200007952	ELAW6041	1	=ES+S/98.0	Cable	4 x 1,5 mm²	0036 390	Lapp
WM1.82	200007952	ELAW6041	1	=ES+S/99.0	Cable	4 x 1,5 mm²	0036 390	Lapp
WM1.83	200007952	ELAW6041	1	=ES+S/100.0	Cable	4 x 1,5 mm²	0036 390	Lapp
WM1.84	200007952	ELAW6041	1	=ES+S/101.0	Cable	4 x 1,5 mm²	0036 390	Lapp
WM1.85	200007952	ELAW6041	1	=ES+S/103.0	Cable	4 x 1,5 mm²	0036 390	Lapp
WM1.86	200007952	ELAW6041	1	=ES+S/104.0	Cable	4 x 1,5 mm²	0036 390	Lapp

Parts list

mechanical construction

Artikelstückliste_Mech_SAP_001

DT	Part number new	Part number old	Quantity	Placement	Designation 1	Designation 2	Order number	Manufacturer
WM1.87	200007952	ELAW6041	1	=ES+S/105.0	Cable	4 x 1,5 mm²	0036 390	Lapp
WM1.88	200007952	ELAW6041	1	=ES+S/106.0	Cable	4 x 1,5 mm²	0036 390	Lapp
WM1.89	200007952	ELAW6041	1	=ES+S/107.0	Cable	4 x 1,5 mm²	0036 390	Lapp
WM1.90	200007952	ELAW6041	1	=ES+S/108.0	Cable	4 x 1,5 mm²	0036 390	Lapp
WM1.91	200007952	ELAW6041	1	=ES+S/110.0	Cable	4 x 1,5 mm²	0036 390	Lapp
WM1.92	200007952	ELAW6041	1	=ES+S/111.0	Cable	4 x 1,5 mm²	0036 390	Lapp
WM1.93	200007952	ELAW6041	1	=ES+S/112.0	Cable	4 x 1,5 mm²	0036 390	Lapp
WM1.95	200007952	ELAW6041	1	=ES+S/113.0	Cable	4 x 1,5 mm²	0036 390	Lapp
WM1.97	200007952	ELAW6041	1	=ES+S/114.0	Cable	4 x 1,5 mm²	0036 390	Lapp
WM1.99	200007952	ELAW6041	1	=ES+S/115.0	Cable	4 x 1,5 mm²	0036 390	Lapp
WM1.101	200007953	ELAW6042	1	=ES+S/117.0	Cable	4 x 2,5 mm2	0036 391	Lapp
WM1.102	200007953	ELAW6042	1	=ES+S/118.0	Cable	4 x 2,5 mm2	0036 391	Lapp
WM2.1	200007952	ELAW6041	1	=ES+S/119.0	Cable	4 x 1,5 mm²	0036 390	Lapp
WM2.2	200007952	ELAW6041	1	=ES+S/120.0	Cable	4 x 1,5 mm²	0036 390	Lapp
WM2.3	200007952	ELAW6041	1	=ES+S/121.0	Cable	4 x 1,5 mm²	0036 390	Lapp
WM2.4	200007952	ELAW6041	1	=ES+S/122.0	Cable	4 x 1,5 mm²	0036 390	Lapp
WM2.5	200007952	ELAW6041	1	=ES+S/123.0	Cable	4 x 1,5 mm²	0036 390	Lapp
WM2.6	200007952	ELAW6041	1	=ES+S/125.0	Cable	4 x 1,5 mm²	0036 390	Lapp
WM2.7	200007952	ELAW6041	1	=ES+S/126.0	Cable	4 x 1,5 mm²	0036 390	Lapp
WM2.8	200007952	ELAW6041	1	=ES+S/127.0	Cable	4 x 1,5 mm²	0036 390	Lapp
WM2.9	200007952	ELAW6041	1	=ES+S/128.0	Cable	4 x 1,5 mm²	0036 390	Lapp
WM2.10	200007952	ELAW6041	1	=ES+S/129.0	Cable	4 x 1,5 mm²	0036 390	Lapp
WM2.11	200007952	ELAW6041	1	=ES+S/133.0	Cable	4 x 1,5 mm²	0036 390	Lapp
WM2.12	200007952	ELAW6041	1	=ES+S/134.0	Cable	4 x 1,5 mm²	0036 390	Lapp
WM2.13	200007952	ELAW6041	1	=ES+S/135.0	Cable	4 x 1,5 mm²	0036 390	Lapp
WM2.14	200007952	ELAW6041	1	=ES+S/136.0	Cable	4 x 1,5 mm²	0036 390	Lapp
WM2.15	200007952	ELAW6041	1	=ES+S/137.0	Cable	4 x 1,5 mm²	0036 390	Lapp
WM2.16	200007952	ELAW6041	1	=ES+S/138.0	Cable	4 x 1,5 mm²	0036 390	Lapp
WM2.17	200007952	ELAW6041	1	=ES+S/140.0	Cable	4 x 1,5 mm²	0036 390	Lapp
WM2.18	200007952	ELAW6041	1	=ES+S/141.0	Cable	4 x 1,5 mm²	0036 390	Lapp
WM2.19	200007952	ELAW6041	1	=ES+S/142.0	Cable	4 x 1,5 mm²	0036 390	Lapp
WM2.20	200007952	ELAW6041	1	=ES+S/143.0	Cable	4 x 1,5 mm²	0036 390	Lapp
WM2.21	200007952	ELAW6041	1	=ES+S/144.0	Cable	4 x 1,5 mm²	0036 390	Lapp
WM2.22	200007952	ELAW6041	1	=ES+S/145.0	Cable	4 x 1,5 mm²	0036 390	Lapp
WM2.23	200007952	ELAW6041	1	=ES+S/147.0	Cable	4 x 1,5 mm²	0036 390	Lapp
WM2.24	200007952	ELAW6041	1	=ES+S/148.0	Cable	4 x 1,5 mm²	0036 390	Lapp
WM2.25	200007952	ELAW6041	1	=ES+S/149.0	Cable	4 x 1,5 mm²	0036 390	Lapp
WM2.26	200007952	ELAW6041	1	=ES+S/150.0	Cable	4 x 1,5 mm²	0036 390	Lapp

Parts list

mechanical construction

Artikelstückliste_Mech_SAP_001

DT	Part number new	Part number old	Quantity	Placement	Designation 1	Designation 2	Order number	Manufacturer
WM2.27	200007952	ELAW6041	1	=ES+S/151.0	Cable	4 x 1,5 mm²	0036 390	Lapp
WM2.28	200007952	ELAW6041	1	=ES+S/152.0	Cable	4 x 1,5 mm²	0036 390	Lapp
WM2.29	200007952	ELAW6041	1	=ES+S/154.0	Cable	4 x 1,5 mm²	0036 390	Lapp
WM2.30	200007952	ELAW6041	1	=ES+S/155.0	Cable	4 x 1,5 mm²	0036 390	Lapp
WM2.31	200007952	ELAW6041	1	=ES+S/156.0	Cable	4 x 1,5 mm²	0036 390	Lapp
WM2.32	200007952	ELAW6041	1	=ES+S/157.0	Cable	4 x 1,5 mm²	0036 390	Lapp
WM2.33	200007952	ELAW6041	1	=ES+S/158.0	Cable	4 x 1,5 mm²	0036 390	Lapp
WM2.34	200007952	ELAW6041	1	=ES+S/159.0	Cable	4 x 1,5 mm²	0036 390	Lapp
WM2.35	200007952	ELAW6041	1	=ES+S/161.0	Cable	4 x 1,5 mm²	0036 390	Lapp
WM2.36	200007952	ELAW6041	1	=ES+S/162.0	Cable	4 x 1,5 mm²	0036 390	Lapp
WM2.37	200007952	ELAW6041	1	=ES+S/163.0	Cable	4 x 1,5 mm²	0036 390	Lapp
WM2.38	200007952	ELAW6041	1	=ES+S/164.0	Cable	4 x 1,5 mm²	0036 390	Lapp
WM2.39	200007952	ELAW6041	1	=ES+S/165.0	Cable	4 x 1,5 mm²	0036 390	Lapp
WM2.40	200007952	ELAW6041	1	=ES+S/166.0	Cable	4 x 1,5 mm²	0036 390	Lapp
WM2.41	200007952	ELAW6041	1	=ES+S/168.0	Cable	4 x 1,5 mm²	0036 390	Lapp
WM2.42	200007952	ELAW6041	1	=ES+S/169.0	Cable	4 x 1,5 mm²	0036 390	Lapp
WM2.43	200007952	ELAW6041	1	=ES+S/170.0	Cable	4 x 1,5 mm²	0036 390	Lapp
WM2.44	200007952	ELAW6041	1	=ES+S/171.0	Cable	4 x 1,5 mm²	0036 390	Lapp
WM2.45	200007952	ELAW6041	1	=ES+S/172.0	Cable	4 x 1,5 mm²	0036 390	Lapp
WM2.46	200007952	ELAW6041	1	=ES+S/173.0	Cable	4 x 1,5 mm²	0036 390	Lapp
WM2.47	200007952	ELAW6041	1	=ES+S/175.0	Cable	4 x 1,5 mm²	0036 390	Lapp
WM2.48	200007952	ELAW6041	1	=ES+S/176.0	Cable	4 x 1,5 mm²	0036 390	Lapp
WM2.49	200007952	ELAW6041	1	=ES+S/177.0	Cable	4 x 1,5 mm²	0036 390	Lapp
WM2.50	200007952	ELAW6041	1	=ES+S/178.0	Cable	4 x 1,5 mm²	0036 390	Lapp
WM2.51	200007952	ELAW6041	1	=ES+S/179.0	Cable	4 x 1,5 mm²	0036 390	Lapp
WM2.52	200007952	ELAW6041	1	=ES+S/180.0	Cable	4 x 1,5 mm²	0036 390	Lapp
WM2.53	200007952	ELAW6041	1	=ES+S/182.0	Cable	4 x 1,5 mm²	0036 390	Lapp
WM2.54	200007952	ELAW6041	1	=ES+S/183.0	Cable	4 x 1,5 mm²	0036 390	Lapp
WM2.55	200007952	ELAW6041	1	=ES+S/184.0	Cable	4 x 1,5 mm²	0036 390	Lapp
WM2.56	200007952	ELAW6041	1	=ES+S/185.0	Cable	4 x 1,5 mm²	0036 390	Lapp
WM2.57	200007952	ELAW6041	1	=ES+S/186.0	Cable	4 x 1,5 mm²	0036 390	Lapp
WM2.58	200007952	ELAW6041	1	=ES+S/187.0	Cable	4 x 1,5 mm²	0036 390	Lapp
WM2.59	200007952	ELAW6041	1	=ES+S/189.0	Cable	4 x 1,5 mm²	0036 390	Lapp
WM2.60	200007952	ELAW6041	1	=ES+S/190.0	Cable	4 x 1,5 mm²	0036 390	Lapp
WM2.61	200007952	ELAW6041	1	=ES+S/191.0	Cable	4 x 1,5 mm²	0036 390	Lapp
WM2.62	200007952	ELAW6041	1	=ES+S/192.0	Cable	4 x 1,5 mm²	0036 390	Lapp
WM2.63	200007952	ELAW6041	1	=ES+S/193.0	Cable	4 x 1,5 mm²	0036 390	Lapp
WM3.11	200007820	ELAW1041	1	=ES+S/196.1	Cable	4 x 1.5 mm2	1119 304	Lapp

Parts list

mechanical construction

Artikelstückliste_Mech_SAP_001

DT	Part number new	Part number old	Quantity	Placement	Designation 1	Designation 2	Order number	Manufacturer
WM3.12	200007820	ELAW1041	1	=ES+S/196.1	Cable	4 x 1.5 mm2	1119 304	Lapp
WM3.21	200007820	ELAW1041	1	=ES+S/196.2	Cable	4 x 1.5 mm2	1119 304	Lapp
WM3.22	200007820	ELAW1041	1	=ES+S/196.2	Cable	4 x 1.5 mm2	1119 304	Lapp
WM3.41	200007820	ELAW1041	1	=ES+S/196.4	Cable	4 x 1.5 mm2	1119 304	Lapp
WM3.42	200007820	ELAW1041	1	=ES+S/196.4	Cable	4 x 1.5 mm2	1119 304	Lapp
WM3.51	200007827	ELAW1047	1	=ES+S/196.6	Cable	4 x 10 mm2	1119 614	Lapp
WM3.52	200007827	ELAW1047	1	=ES+S/196.6	Cable	4 x 10 mm2	1119 614	Lapp
WM4.11	200007820	ELAW1041	1	=ES+S/197.1	Cable	4 x 1.5 mm2	1119 304	Lapp
WM4.12	200007820	ELAW1041	1	=ES+S/197.1	Cable	4 x 1.5 mm2	1119 304	Lapp
WM4.21	200007820	ELAW1041	1	=ES+S/197.2	Cable	4 x 1.5 mm2	1119 304	Lapp
WM4.22	200007820	ELAW1041	1	=ES+S/197.2	Cable	4 x 1.5 mm2	1119 304	Lapp
WM4.31	200007820	ELAW1041	1	=ES+S/197.4	Cable	4 x 1.5 mm2	1119 304	Lapp
WM4.32	200007820	ELAW1041	1	=ES+S/197.4	Cable	4 x 1.5 mm2	1119 304	Lapp
WM4.41	200007820	ELAW1041	1	=ES+S/197.6	Cable	4 x 1.5 mm2	1119 304	Lapp
WM4.42	200007820	ELAW1041	1	=ES+S/197.6	Cable	4 x 1.5 mm2	1119 304	Lapp
WM7.1	200007823	ELAW1043	1	=ES+S/198.1	Cable	4 x 35 mm2	1119 644	Lapp
WM7.2	200007823	ELAW1043	1	=ES+S/198.1	Cable	4 x 35 mm2	1119 644	Lapp
WM7.21	200007820	ELAW1041	1	=ES+S/198.4	Cable	4 x 1.5 mm2	1119 304	Lapp
WM7.22	200007820	ELAW1041	1	=ES+S/198.4	Cable	4 x 1.5 mm2	1119 304	Lapp
WM7.41	200007820	ELAW1041	1	=ES+S/198.6	Cable	4 x 1.5 mm2	1119 304	Lapp
WM7.42	200007820	ELAW1041	1	=ES+S/198.6	Cable	4 x 1.5 mm2	1119 304	Lapp
WM8.11	200007822	ELAW1042	1	=ES+S/199.1	Cable	4 x 2.5 mm2	1119 404	Lapp
WM8.12	200007822	ELAW1042	1	=ES+S/199.1	Cable	4 x 2.5 mm2	1119 404	Lapp
WM8.21	200007822	ELAW1042	1	=ES+S/199.2	Cable	4 x 2.5 mm2	1119 404	Lapp
WM8.22	200007822	ELAW1042	1	=ES+S/199.2	Cable	4 x 2.5 mm2	1119 404	Lapp
WM8.31	200007824	ELAW1044	1	=ES+S/199.4	Cable	4 x 4 mm2	1119 504	Lapp
WM8.32	200007824	ELAW1044	1	=ES+S/199.4	Cable	4 x 4 mm2	1119 504	Lapp
WM8.41	200007820	ELAW1041	1	=ES+S/199.6	Cable	4 x 1.5 mm2	1119 304	Lapp
WM8.42	200007820	ELAW1041	1	=ES+S/199.6	Cable	4 x 1.5 mm2	1119 304	Lapp
WM9.1	200007820	ELAW1041	1	=ES+S/212.1	Cable	4 x 1.5 mm2	1119 304	Lapp
WM9.01	200007954	ELAW6043	1	=ES+S/200.0	Cable	4 x 35 mm²	0036 397	Lapp
WM9.2	200007820	ELAW1041	1	=ES+S/212.1	Cable	4 x 1.5 mm2	1119 304	Lapp
WM9.02	200007954	ELAW6043	1	=ES+S/200.0	Cable	4 x 35 mm²	0036 397	Lapp
WM9.3	200007843	ELAW1071	1	=ES+S/212.1	----------	7 x 1.5 mm2 max. Länge 500m	1119 307	Lapp
WM10.1	200007820	ELAW1041	1	=ES+S/212.3	Cable	4 x 1.5 mm2	1119 304	Lapp
WM10.01	200007954	ELAW6043	1	=ES+S/201.0	Cable	4 x 35 mm²	0036 397	Lapp
WM10.2	200007820	ELAW1041	1	=ES+S/212.3	Cable	4 x 1.5 mm2	1119 304	Lapp
WM10.02	200007954	ELAW6043	1	=ES+S/201.0	Cable	4 x 35 mm²	0036 397	Lapp

Parts list

mechanical construction

Artikelstückliste_Mech_SAP_001

DT	Part number new	Part number old	Quantity	Placement	Designation 1	Designation 2	Order number	Manufacturer
WM10.3	200007843	ELAW1071	1	=ES+S/212.3	----------	7 x 1.5 mm2 max. Länge 500m	1119 307	Lapp
WM11.1	200007820	ELAW1041	1	=ES+S/212.5	Cable	4 x 1.5 mm2	1119 304	Lapp
WM11.01	200007954	ELAW6043	1	=ES+S/202.0	Cable	4 x 35 mm²	0036 397	Lapp
WM11.2	200007820	ELAW1041	1	=ES+S/212.5	Cable	4 x 1.5 mm2	1119 304	Lapp
WM11.02	200007954	ELAW6043	1	=ES+S/202.0	Cable	4 x 35 mm²	0036 397	Lapp
WM11.3	200007843	ELAW1071	1	=ES+S/212.5	----------	7 x 1.5 mm2 max. Länge 500m	1119 307	Lapp
WM12.1	200007820	ELAW1041	1	=ES+S/212.8	Cable	4 x 1.5 mm2	1119 304	Lapp
WM12.01	200007954	ELAW6043	1	=ES+S/203.0	Cable	4 x 35 mm²	0036 397	Lapp
WM12.2	200007820	ELAW1041	1	=ES+S/212.8	Cable	4 x 1.5 mm2	1119 304	Lapp
WM12.02	200007954	ELAW6043	1	=ES+S/203.0	Cable	4 x 35 mm²	0036 397	Lapp
WM12.3	200007843	ELAW1071	1	=ES+S/212.7	----------	7 x 1.5 mm2 max. Länge 500m	1119 307	Lapp
WM13.1	200007820	ELAW1041	1	=ES+S/213.1	Cable	4 x 1.5 mm2	1119 304	Lapp
WM13.01	200007954	ELAW6043	1	=ES+S/204.0	Cable	4 x 35 mm²	0036 397	Lapp
WM13.2	200007820	ELAW1041	1	=ES+S/213.1	Cable	4 x 1.5 mm2	1119 304	Lapp
WM13.02	200007954	ELAW6043	1	=ES+S/204.0	Cable	4 x 35 mm²	0036 397	Lapp
WM13.3	200007843	ELAW1071	1	=ES+S/213.1	----------	7 x 1.5 mm2 max. Länge 500m	1119 307	Lapp
WM14.1	200007820	ELAW1041	1	=ES+S/213.3	Cable	4 x 1.5 mm2	1119 304	Lapp
WM14.01	200007954	ELAW6043	1	=ES+S/205.0	Cable	4 x 35 mm²	0036 397	Lapp
WM14.2	200007820	ELAW1041	1	=ES+S/213.3	Cable	4 x 1.5 mm2	1119 304	Lapp
WM14.02	200007954	ELAW6043	1	=ES+S/205.0	Cable	4 x 35 mm²	0036 397	Lapp
WM14.3	200007843	ELAW1071	1	=ES+S/213.3	----------	7 x 1.5 mm2 max. Länge 500m	1119 307	Lapp
WM15.1	200007820	ELAW1041	1	=ES+S/213.5	Cable	4 x 1.5 mm2	1119 304	Lapp
WM15.01	200007954	ELAW6043	1	=ES+S/206.0	Cable	4 x 35 mm²	0036 397	Lapp
WM15.2	200007820	ELAW1041	1	=ES+S/213.5	Cable	4 x 1.5 mm2	1119 304	Lapp
WM15.02	200007954	ELAW6043	1	=ES+S/206.0	Cable	4 x 35 mm²	0036 397	Lapp
WM15.3	200007843	ELAW1071	1	=ES+S/213.5	----------	7 x 1.5 mm2 max. Länge 500m	1119 307	Lapp
WM16.1	200007820	ELAW1041	1	=ES+S/213.8	Cable	4 x 1.5 mm2	1119 304	Lapp
WM16.01	200007954	ELAW6043	1	=ES+S/207.0	Cable	4 x 35 mm²	0036 397	Lapp
WM16.2	200007820	ELAW1041	1	=ES+S/213.8	Cable	4 x 1.5 mm2	1119 304	Lapp
WM16.02	200007954	ELAW6043	1	=ES+S/207.0	Cable	4 x 35 mm²	0036 397	Lapp
WM16.3	200007843	ELAW1071	1	=ES+S/213.7	----------	7 x 1.5 mm2 max. Länge 500m	1119 307	Lapp
WM31.1	200007822	ELAW1042	1	=ES+S/208.1	Cable	4 x 2.5 mm2	1119 404	Lapp
WM31.2	200007822	ELAW1042	1	=ES+S/208.1	Cable	4 x 2.5 mm2	1119 404	Lapp
WM41.1	200007820	ELAW1041	1	=ES+S/209.1	Cable	4 x 1.5 mm2	1119 304	Lapp
WM41.2	200007820	ELAW1041	1	=ES+S/209.1	Cable	4 x 1.5 mm2	1119 304	Lapp
WML1.1	200007819	ELAW1040	1	=ES+S/3.8	Cable	4 x 1.0 mm2	1119 204	Lapp
WML1.2	200007819	ELAW1040	1	=ES+S/4.8	Cable	4 x 1.0 mm2	1119 204	Lapp
WML1.3	200007819	ELAW1040	1	=ES+S/5.8	Cable	4 x 1.0 mm2	1119 204	Lapp

Parts list

mechanical construction

Artikelstückliste_Mech_SAP_001

DT	Part number new	Part number old	Quantity	Placement	Designation 1	Designation 2	Order number	Manufacturer
WML1.4	200007819	ELAW1040	1	=ES+S/6.8	Cable	4 x 1.0 mm2	1119 204	Lapp
WML1.5	200007819	ELAW1040	1	=ES+S/7.8	Cable	4 x 1.0 mm2	1119 204	Lapp
WML1.6	200007819	ELAW1040	1	=ES+S/8.8	Cable	4 x 1.0 mm2	1119 204	Lapp
WML1.7	200007819	ELAW1040	1	=ES+S/10.8	Cable	4 x 1.0 mm2	1119 204	Lapp
WML1.8	200007819	ELAW1040	1	=ES+S/11.8	Cable	4 x 1.0 mm2	1119 204	Lapp
WML1.9	200007819	ELAW1040	1	=ES+S/12.8	Cable	4 x 1.0 mm2	1119 204	Lapp
WML1.10	200007819	ELAW1040	1	=ES+S/13.8	Cable	4 x 1.0 mm2	1119 204	Lapp
WML1.11	200007819	ELAW1040	1	=ES+S/14.8	Cable	4 x 1.0 mm2	1119 204	Lapp
WML1.12	200007819	ELAW1040	1	=ES+S/15.8	Cable	4 x 1.0 mm2	1119 204	Lapp
WML1.13	200007819	ELAW1040	1	=ES+S/17.8	Cable	4 x 1.0 mm2	1119 204	Lapp
WML1.14	200007819	ELAW1040	1	=ES+S/18.8	Cable	4 x 1.0 mm2	1119 204	Lapp
WML1.15	200007819	ELAW1040	1	=ES+S/19.8	Cable	4 x 1.0 mm2	1119 204	Lapp
WML1.16	200007819	ELAW1040	1	=ES+S/20.8	Cable	4 x 1.0 mm2	1119 204	Lapp
WML1.17	200007819	ELAW1040	1	=ES+S/21.8	Cable	4 x 1.0 mm2	1119 204	Lapp
WML1.18	200007819	ELAW1040	1	=ES+S/22.8	Cable	4 x 1.0 mm2	1119 204	Lapp
WML1.19	200007819	ELAW1040	1	=ES+S/24.8	Cable	4 x 1.0 mm2	1119 204	Lapp
WML1.20	200007819	ELAW1040	1	=ES+S/25.8	Cable	4 x 1.0 mm2	1119 204	Lapp
WML1.21	200007819	ELAW1040	1	=ES+S/26.8	Cable	4 x 1.0 mm2	1119 204	Lapp
WML1.22	200007819	ELAW1040	1	=ES+S/27.8	Cable	4 x 1.0 mm2	1119 204	Lapp
WML1.23	200007819	ELAW1040	1	=ES+S/28.8	Cable	4 x 1.0 mm2	1119 204	Lapp
WML1.24	200007819	ELAW1040	1	=ES+S/29.8	Cable	4 x 1.0 mm2	1119 204	Lapp
WML1.25	200007819	ELAW1040	1	=ES+S/31.8	Cable	4 x 1.0 mm2	1119 204	Lapp
WML1.26	200007819	ELAW1040	1	=ES+S/32.8	Cable	4 x 1.0 mm2	1119 204	Lapp
WML1.27	200007819	ELAW1040	1	=ES+S/33.8	Cable	4 x 1.0 mm2	1119 204	Lapp
WML1.28	200007819	ELAW1040	1	=ES+S/34.8	Cable	4 x 1.0 mm2	1119 204	Lapp
WML1.29	200007819	ELAW1040	1	=ES+S/35.8	Cable	4 x 1.0 mm2	1119 204	Lapp
WML1.30	200007819	ELAW1040	1	=ES+S/36.8	Cable	4 x 1.0 mm2	1119 204	Lapp
WML1.31	200007819	ELAW1040	1	=ES+S/38.8	Cable	4 x 1.0 mm2	1119 204	Lapp
WML1.32	200007819	ELAW1040	1	=ES+S/39.8	Cable	4 x 1.0 mm2	1119 204	Lapp
WML1.33	200007819	ELAW1040	1	=ES+S/40.8	Cable	4 x 1.0 mm2	1119 204	Lapp
WML1.34	200007819	ELAW1040	1	=ES+S/41.8	Cable	4 x 1.0 mm2	1119 204	Lapp
WML1.35	200007819	ELAW1040	1	=ES+S/42.8	Cable	4 x 1.0 mm2	1119 204	Lapp
WML1.36	200007819	ELAW1040	1	=ES+S/43.8	Cable	4 x 1.0 mm2	1119 204	Lapp
WML1.37	200007819	ELAW1040	1	=ES+S/45.8	Cable	4 x 1.0 mm2	1119 204	Lapp
WML1.38	200007819	ELAW1040	1	=ES+S/46.8	Cable	4 x 1.0 mm2	1119 204	Lapp
WML1.39	200007819	ELAW1040	1	=ES+S/47.8	Cable	4 x 1.0 mm2	1119 204	Lapp
WML1.40	200007819	ELAW1040	1	=ES+S/48.8	Cable	4 x 1.0 mm2	1119 204	Lapp
WML1.41	200007819	ELAW1040	1	=ES+S/49.8	Cable	4 x 1.0 mm2	1119 204	Lapp

Parts list

mechanical construction

Artikelstückliste_Mech_SAP_001

DT	Part number new	Part number old	Quantity	Placement	Designation 1	Designation 2	Order number	Manufacturer
WML1.42	200007819	ELAW1040	1	=ES+S/50.8	Cable	4 x 1.0 mm2	1119 204	Lapp
WML1.43	200007819	ELAW1040	1	=ES+S/52.8	Cable	4 x 1.0 mm2	1119 204	Lapp
WML1.44	200007819	ELAW1040	1	=ES+S/53.8	Cable	4 x 1.0 mm2	1119 204	Lapp
WML1.45	200007819	ELAW1040	1	=ES+S/54.8	Cable	4 x 1.0 mm2	1119 204	Lapp
WML1.46	200007819	ELAW1040	1	=ES+S/55.8	Cable	4 x 1.0 mm2	1119 204	Lapp
WML1.47	200007819	ELAW1040	1	=ES+S/56.8	Cable	4 x 1.0 mm2	1119 204	Lapp
WML1.48	200007819	ELAW1040	1	=ES+S/57.8	Cable	4 x 1.0 mm2	1119 204	Lapp
WML1.49	200007819	ELAW1040	1	=ES+S/59.8	Cable	4 x 1.0 mm2	1119 204	Lapp
WML1.50	200007819	ELAW1040	1	=ES+S/60.8	Cable	4 x 1.0 mm2	1119 204	Lapp
WML1.51	200007819	ELAW1040	1	=ES+S/61.8	Cable	4 x 1.0 mm2	1119 204	Lapp
WML1.52	200007819	ELAW1040	1	=ES+S/62.8	Cable	4 x 1.0 mm2	1119 204	Lapp
WML1.53	200007819	ELAW1040	1	=ES+S/63.8	Cable	4 x 1.0 mm2	1119 204	Lapp
WML1.54	200007819	ELAW1040	1	=ES+S/64.8	Cable	4 x 1.0 mm2	1119 204	Lapp
WML1.55	200007819	ELAW1040	1	=ES+S/68.8	Cable	4 x 1.0 mm2	1119 204	Lapp
WML1.56	200007819	ELAW1040	1	=ES+S/69.8	Cable	4 x 1.0 mm2	1119 204	Lapp
WML1.57	200007819	ELAW1040	1	=ES+S/70.8	Cable	4 x 1.0 mm2	1119 204	Lapp
WML1.58	200007819	ELAW1040	1	=ES+S/71.8	Cable	4 x 1.0 mm2	1119 204	Lapp
WML1.59	200007819	ELAW1040	1	=ES+S/72.8	Cable	4 x 1.0 mm2	1119 204	Lapp
WML1.60	200007819	ELAW1040	1	=ES+S/73.8	Cable	4 x 1.0 mm2	1119 204	Lapp
WML1.61	200007819	ELAW1040	1	=ES+S/75.8	Cable	4 x 1.0 mm2	1119 204	Lapp
WML1.62	200007819	ELAW1040	1	=ES+S/76.8	Cable	4 x 1.0 mm2	1119 204	Lapp
WML1.63	200007819	ELAW1040	1	=ES+S/77.8	Cable	4 x 1.0 mm2	1119 204	Lapp
WML1.64	200007819	ELAW1040	1	=ES+S/78.8	Cable	4 x 1.0 mm2	1119 204	Lapp
WML1.65	200007819	ELAW1040	1	=ES+S/79.8	Cable	4 x 1.0 mm2	1119 204	Lapp
WML1.66	200007819	ELAW1040	1	=ES+S/80.8	Cable	4 x 1.0 mm2	1119 204	Lapp
WML1.67	200007819	ELAW1040	1	=ES+S/82.8	Cable	4 x 1.0 mm2	1119 204	Lapp
WML1.68	200007819	ELAW1040	1	=ES+S/83.8	Cable	4 x 1.0 mm2	1119 204	Lapp
WML1.69	200007819	ELAW1040	1	=ES+S/84.8	Cable	4 x 1.0 mm2	1119 204	Lapp
WML1.70	200007819	ELAW1040	1	=ES+S/85.8	Cable	4 x 1.0 mm2	1119 204	Lapp
WML1.71	200007819	ELAW1040	1	=ES+S/86.8	Cable	4 x 1.0 mm2	1119 204	Lapp
WML1.72	200007819	ELAW1040	1	=ES+S/87.8	Cable	4 x 1.0 mm2	1119 204	Lapp
WML1.73	200007819	ELAW1040	1	=ES+S/89.8	Cable	4 x 1.0 mm2	1119 204	Lapp
WML1.74	200007819	ELAW1040	1	=ES+S/90.8	Cable	4 x 1.0 mm2	1119 204	Lapp
WML1.75	200007819	ELAW1040	1	=ES+S/91.8	Cable	4 x 1.0 mm2	1119 204	Lapp
WML1.76	200007819	ELAW1040	1	=ES+S/92.8	Cable	4 x 1.0 mm2	1119 204	Lapp
WML1.77	200007819	ELAW1040	1	=ES+S/93.8	Cable	4 x 1.0 mm2	1119 204	Lapp
WML1.78	200007819	ELAW1040	1	=ES+S/94.8	Cable	4 x 1.0 mm2	1119 204	Lapp
WML1.79	200007819	ELAW1040	1	=ES+S/96.8	Cable	4 x 1.0 mm2	1119 204	Lapp

Parts list

mechanical construction

Artikelstückliste_Mech_SAP_001

DT	Part number new	Part number old	Quantity	Placement	Designation 1	Designation 2	Order number	Manufacturer
WML1.80	200007819	ELAW1040	1	=ES+S/97.8	Cable	4 x 1.0 mm2	1119 204	Lapp
WML1.81	200007819	ELAW1040	1	=ES+S/98.8	Cable	4 x 1.0 mm2	1119 204	Lapp
WML1.82	200007819	ELAW1040	1	=ES+S/99.8	Cable	4 x 1.0 mm2	1119 204	Lapp
WML1.83	200007819	ELAW1040	1	=ES+S/100.8	Cable	4 x 1.0 mm2	1119 204	Lapp
WML1.84	200007819	ELAW1040	1	=ES+S/101.8	Cable	4 x 1.0 mm2	1119 204	Lapp
WML1.85	200007819	ELAW1040	1	=ES+S/103.8	Cable	4 x 1.0 mm2	1119 204	Lapp
WML1.86	200007819	ELAW1040	1	=ES+S/104.8	Cable	4 x 1.0 mm2	1119 204	Lapp
WML1.87	200007819	ELAW1040	1	=ES+S/105.8	Cable	4 x 1.0 mm2	1119 204	Lapp
WML1.88	200007819	ELAW1040	1	=ES+S/106.8	Cable	4 x 1.0 mm2	1119 204	Lapp
WML1.89	200007819	ELAW1040	1	=ES+S/107.8	Cable	4 x 1.0 mm2	1119 204	Lapp
WML1.90	200007819	ELAW1040	1	=ES+S/108.8	Cable	4 x 1.0 mm2	1119 204	Lapp
WML1.91	200007819	ELAW1040	1	=ES+S/110.8	Cable	4 x 1.0 mm2	1119 204	Lapp
WML1.92	200007819	ELAW1040	1	=ES+S/111.8	Cable	4 x 1.0 mm2	1119 204	Lapp
WML1.93	200007819	ELAW1040	1	=ES+S/112.8	Cable	4 x 1.0 mm2	1119 204	Lapp
WML1.95	200007819	ELAW1040	1	=ES+S/113.8	Cable	4 x 1.0 mm2	1119 204	Lapp
WML1.97	200007819	ELAW1040	1	=ES+S/114.8	Cable	4 x 1.0 mm2	1119 204	Lapp
WML1.99	200007819	ELAW1040	1	=ES+S/115.8	Cable	4 x 1.0 mm2	1119 204	Lapp
WML1.101	200007819	ELAW1040	1	=ES+S/117.8	Cable	4 x 1.0 mm2	1119 204	Lapp
WML1.102	200007819	ELAW1040	1	=ES+S/118.8	Cable	4 x 1.0 mm2	1119 204	Lapp
WML2.1	200007819	ELAW1040	1	=ES+S/119.8	Cable	4 x 1.0 mm2	1119 204	Lapp
WML2.2	200007819	ELAW1040	1	=ES+S/120.8	Cable	4 x 1.0 mm2	1119 204	Lapp
WML2.3	200007819	ELAW1040	1	=ES+S/121.8	Cable	4 x 1.0 mm2	1119 204	Lapp
WML2.4	200007819	ELAW1040	1	=ES+S/122.8	Cable	4 x 1.0 mm2	1119 204	Lapp
WML2.5	200007819	ELAW1040	1	=ES+S/123.8	Cable	4 x 1.0 mm2	1119 204	Lapp
WML2.6	200007819	ELAW1040	1	=ES+S/125.8	Cable	4 x 1.0 mm2	1119 204	Lapp
WML2.7	200007819	ELAW1040	1	=ES+S/126.8	Cable	4 x 1.0 mm2	1119 204	Lapp
WML2.8	200007819	ELAW1040	1	=ES+S/127.8	Cable	4 x 1.0 mm2	1119 204	Lapp
WML2.9	200007819	ELAW1040	1	=ES+S/128.8	Cable	4 x 1.0 mm2	1119 204	Lapp
WML2.10	200007819	ELAW1040	1	=ES+S/129.8	Cable	4 x 1.0 mm2	1119 204	Lapp
WML2.11	200007819	ELAW1040	1	=ES+S/133.8	Cable	4 x 1.0 mm2	1119 204	Lapp
WML2.12	200007819	ELAW1040	1	=ES+S/134.8	Cable	4 x 1.0 mm2	1119 204	Lapp
WML2.13	200007819	ELAW1040	1	=ES+S/135.8	Cable	4 x 1.0 mm2	1119 204	Lapp
WML2.14	200007819	ELAW1040	1	=ES+S/136.8	Cable	4 x 1.0 mm2	1119 204	Lapp
WML2.15	200007819	ELAW1040	1	=ES+S/137.8	Cable	4 x 1.0 mm2	1119 204	Lapp
WML2.16	200007819	ELAW1040	1	=ES+S/138.8	Cable	4 x 1.0 mm2	1119 204	Lapp
WML2.17	200007819	ELAW1040	1	=ES+S/140.8	Cable	4 x 1.0 mm2	1119 204	Lapp
WML2.18	200007819	ELAW1040	1	=ES+S/141.8	Cable	4 x 1.0 mm2	1119 204	Lapp
WML2.19	200007819	ELAW1040	1	=ES+S/142.8	Cable	4 x 1.0 mm2	1119 204	Lapp

Parts list

mechanical construction

Artikelstückliste_Mech_SAP_001

DT	Part number new	Part number old	Quantity	Placement	Designation 1	Designation 2	Order number	Manufacturer
WML2.20	200007819	ELAW1040	1	=ES+S/143.8	Cable	4 x 1.0 mm2	1119 204	Lapp
WML2.21	200007819	ELAW1040	1	=ES+S/144.8	Cable	4 x 1.0 mm2	1119 204	Lapp
WML2.22	200007819	ELAW1040	1	=ES+S/145.8	Cable	4 x 1.0 mm2	1119 204	Lapp
WML2.23	200007819	ELAW1040	1	=ES+S/147.8	Cable	4 x 1.0 mm2	1119 204	Lapp
WML2.24	200007819	ELAW1040	1	=ES+S/148.8	Cable	4 x 1.0 mm2	1119 204	Lapp
WML2.25	200007819	ELAW1040	1	=ES+S/149.8	Cable	4 x 1.0 mm2	1119 204	Lapp
WML2.26	200007819	ELAW1040	1	=ES+S/150.8	Cable	4 x 1.0 mm2	1119 204	Lapp
WML2.27	200007819	ELAW1040	1	=ES+S/151.8	Cable	4 x 1.0 mm2	1119 204	Lapp
WML2.28	200007819	ELAW1040	1	=ES+S/152.8	Cable	4 x 1.0 mm2	1119 204	Lapp
WML2.29	200007819	ELAW1040	1	=ES+S/154.8	Cable	4 x 1.0 mm2	1119 204	Lapp
WML2.30	200007819	ELAW1040	1	=ES+S/155.8	Cable	4 x 1.0 mm2	1119 204	Lapp
WML2.31	200007819	ELAW1040	1	=ES+S/156.8	Cable	4 x 1.0 mm2	1119 204	Lapp
WML2.32	200007819	ELAW1040	1	=ES+S/157.8	Cable	4 x 1.0 mm2	1119 204	Lapp
WML2.33	200007819	ELAW1040	1	=ES+S/158.8	Cable	4 x 1.0 mm2	1119 204	Lapp
WML2.34	200007819	ELAW1040	1	=ES+S/159.8	Cable	4 x 1.0 mm2	1119 204	Lapp
WML2.35	200007819	ELAW1040	1	=ES+S/161.8	Cable	4 x 1.0 mm2	1119 204	Lapp
WML2.36	200007819	ELAW1040	1	=ES+S/162.8	Cable	4 x 1.0 mm2	1119 204	Lapp
WML2.37	200007819	ELAW1040	1	=ES+S/163.8	Cable	4 x 1.0 mm2	1119 204	Lapp
WML2.38	200007819	ELAW1040	1	=ES+S/164.8	Cable	4 x 1.0 mm2	1119 204	Lapp
WML2.39	200007819	ELAW1040	1	=ES+S/165.8	Cable	4 x 1.0 mm2	1119 204	Lapp
WML2.40	200007819	ELAW1040	1	=ES+S/166.8	Cable	4 x 1.0 mm2	1119 204	Lapp
WML2.41	200007819	ELAW1040	1	=ES+S/168.8	Cable	4 x 1.0 mm2	1119 204	Lapp
WML2.42	200007819	ELAW1040	1	=ES+S/169.8	Cable	4 x 1.0 mm2	1119 204	Lapp
WML2.43	200007819	ELAW1040	1	=ES+S/170.8	Cable	4 x 1.0 mm2	1119 204	Lapp
WML2.44	200007819	ELAW1040	1	=ES+S/171.8	Cable	4 x 1.0 mm2	1119 204	Lapp
WML2.45	200007819	ELAW1040	1	=ES+S/172.8	Cable	4 x 1.0 mm2	1119 204	Lapp
WML2.46	200007819	ELAW1040	1	=ES+S/173.8	Cable	4 x 1.0 mm2	1119 204	Lapp
WML2.47	200007819	ELAW1040	1	=ES+S/175.8	Cable	4 x 1.0 mm2	1119 204	Lapp
WML2.48	200007819	ELAW1040	1	=ES+S/176.8	Cable	4 x 1.0 mm2	1119 204	Lapp
WML2.49	200007819	ELAW1040	1	=ES+S/177.8	Cable	4 x 1.0 mm2	1119 204	Lapp
WML2.50	200007819	ELAW1040	1	=ES+S/178.8	Cable	4 x 1.0 mm2	1119 204	Lapp
WML2.51	200007819	ELAW1040	1	=ES+S/179.8	Cable	4 x 1.0 mm2	1119 204	Lapp
WML2.52	200007819	ELAW1040	1	=ES+S/180.8	Cable	4 x 1.0 mm2	1119 204	Lapp
WML2.53	200007819	ELAW1040	1	=ES+S/182.8	Cable	4 x 1.0 mm2	1119 204	Lapp
WML2.54	200007819	ELAW1040	1	=ES+S/183.8	Cable	4 x 1.0 mm2	1119 204	Lapp
WML2.55	200007819	ELAW1040	1	=ES+S/184.8	Cable	4 x 1.0 mm2	1119 204	Lapp
WML2.56	200007819	ELAW1040	1	=ES+S/185.8	Cable	4 x 1.0 mm2	1119 204	Lapp
WML2.57	200007819	ELAW1040	1	=ES+S/186.8	Cable	4 x 1.0 mm2	1119 204	Lapp

Parts list

mechanical construction

Artikelstückliste_Mech_SAP_001

DT	Part number new	Part number old	Quantity	Placement	Designation 1	Designation 2	Order number	Manufacturer
WML2.58	200007819	ELAW1040	1	=ES+S/187.8	Cable	4 x 1.0 mm2	1119 204	Lapp
WML2.59	200007819	ELAW1040	1	=ES+S/189.8	Cable	4 x 1.0 mm2	1119 204	Lapp
WML2.60	200007819	ELAW1040	1	=ES+S/190.8	Cable	4 x 1.0 mm2	1119 204	Lapp
WML2.61	200007819	ELAW1040	1	=ES+S/191.8	Cable	4 x 1.0 mm2	1119 204	Lapp
WML2.62	200007819	ELAW1040	1	=ES+S/192.8	Cable	4 x 1.0 mm2	1119 204	Lapp
WML2.63	200007819	ELAW1040	1	=ES+S/193.8	Cable	4 x 1.0 mm2	1119 204	Lapp
WRA32.3	200007977	ELAW6433	1	=ES+S/208.8	Cable	3 x 0,75 mm2	0035 710	Lapp
WRM1.1	200007814	ELAW1030	1	=ES+S/3.2	Cable	3 x 1.0 mm2	1119 203	Lapp
WRM1.2	200007814	ELAW1030	1	=ES+S/4.2	Cable	3 x 1.0 mm2	1119 203	Lapp
WRM1.3	200007814	ELAW1030	1	=ES+S/5.2	Cable	3 x 1.0 mm2	1119 203	Lapp
WRM1.4	200007814	ELAW1030	1	=ES+S/6.2	Cable	3 x 1.0 mm2	1119 203	Lapp
WRM1.5	200007814	ELAW1030	1	=ES+S/7.2	Cable	3 x 1.0 mm2	1119 203	Lapp
WRM1.6	200007814	ELAW1030	1	=ES+S/8.2	Cable	3 x 1.0 mm2	1119 203	Lapp
WRM1.7	200007814	ELAW1030	1	=ES+S/10.2	Cable	3 x 1.0 mm2	1119 203	Lapp
WRM1.8	200007814	ELAW1030	1	=ES+S/11.2	Cable	3 x 1.0 mm2	1119 203	Lapp
WRM1.9	200007814	ELAW1030	1	=ES+S/12.2	Cable	3 x 1.0 mm2	1119 203	Lapp
WRM1.10	200007814	ELAW1030	1	=ES+S/13.2	Cable	3 x 1.0 mm2	1119 203	Lapp
WRM1.11	200007814	ELAW1030	1	=ES+S/14.2	Cable	3 x 1.0 mm2	1119 203	Lapp
WRM1.12	200007814	ELAW1030	1	=ES+S/15.2	Cable	3 x 1.0 mm2	1119 203	Lapp
WRM1.13	200007814	ELAW1030	1	=ES+S/17.2	Cable	3 x 1.0 mm2	1119 203	Lapp
WRM1.14	200007814	ELAW1030	1	=ES+S/18.2	Cable	3 x 1.0 mm2	1119 203	Lapp
WRM1.15	200007814	ELAW1030	1	=ES+S/19.2	Cable	3 x 1.0 mm2	1119 203	Lapp
WRM1.16	200007814	ELAW1030	1	=ES+S/20.2	Cable	3 x 1.0 mm2	1119 203	Lapp
WRM1.17	200007814	ELAW1030	1	=ES+S/21.2	Cable	3 x 1.0 mm2	1119 203	Lapp
WRM1.18	200007814	ELAW1030	1	=ES+S/22.2	Cable	3 x 1.0 mm2	1119 203	Lapp
WRM1.19	200007814	ELAW1030	1	=ES+S/24.2	Cable	3 x 1.0 mm2	1119 203	Lapp
WRM1.20	200007814	ELAW1030	1	=ES+S/25.2	Cable	3 x 1.0 mm2	1119 203	Lapp
WRM1.21	200007814	ELAW1030	1	=ES+S/26.2	Cable	3 x 1.0 mm2	1119 203	Lapp
WRM1.22	200007814	ELAW1030	1	=ES+S/27.2	Cable	3 x 1.0 mm2	1119 203	Lapp
WRM1.23	200007814	ELAW1030	1	=ES+S/28.2	Cable	3 x 1.0 mm2	1119 203	Lapp
WRM1.24	200007814	ELAW1030	1	=ES+S/29.2	Cable	3 x 1.0 mm2	1119 203	Lapp
WRM1.25	200007814	ELAW1030	1	=ES+S/31.2	Cable	3 x 1.0 mm2	1119 203	Lapp
WRM1.26	200007814	ELAW1030	1	=ES+S/32.2	Cable	3 x 1.0 mm2	1119 203	Lapp
WRM1.27	200007814	ELAW1030	1	=ES+S/33.2	Cable	3 x 1.0 mm2	1119 203	Lapp
WRM1.28	200007814	ELAW1030	1	=ES+S/34.2	Cable	3 x 1.0 mm2	1119 203	Lapp
WRM1.29	200007814	ELAW1030	1	=ES+S/35.2	Cable	3 x 1.0 mm2	1119 203	Lapp
WRM1.30	200007814	ELAW1030	1	=ES+S/36.2	Cable	3 x 1.0 mm2	1119 203	Lapp
WRM1.31	200007814	ELAW1030	1	=ES+S/38.2	Cable	3 x 1.0 mm2	1119 203	Lapp

Parts list

mechanical construction

Artikelstückliste_Mech_SAP_001

DT	Part number new	Part number old	Quantity	Placement	Designation 1	Designation 2	Order number	Manufacturer
WRM1.32	200007814	ELAW1030	1	=ES+S/39.2	Cable	3 x 1.0 mm2	1119 203	Lapp
WRM1.33	200007814	ELAW1030	1	=ES+S/40.2	Cable	3 x 1.0 mm2	1119 203	Lapp
WRM1.34	200007814	ELAW1030	1	=ES+S/41.2	Cable	3 x 1.0 mm2	1119 203	Lapp
WRM1.35	200007814	ELAW1030	1	=ES+S/42.2	Cable	3 x 1.0 mm2	1119 203	Lapp
WRM1.36	200007814	ELAW1030	1	=ES+S/43.2	Cable	3 x 1.0 mm2	1119 203	Lapp
WRM1.37	200007814	ELAW1030	1	=ES+S/45.2	Cable	3 x 1.0 mm2	1119 203	Lapp
WRM1.38	200007814	ELAW1030	1	=ES+S/46.2	Cable	3 x 1.0 mm2	1119 203	Lapp
WRM1.39	200007814	ELAW1030	1	=ES+S/47.2	Cable	3 x 1.0 mm2	1119 203	Lapp
WRM1.40	200007814	ELAW1030	1	=ES+S/48.2	Cable	3 x 1.0 mm2	1119 203	Lapp
WRM1.41	200007814	ELAW1030	1	=ES+S/49.2	Cable	3 x 1.0 mm2	1119 203	Lapp
WRM1.42	200007814	ELAW1030	1	=ES+S/50.2	Cable	3 x 1.0 mm2	1119 203	Lapp
WRM1.43	200007814	ELAW1030	1	=ES+S/52.2	Cable	3 x 1.0 mm2	1119 203	Lapp
WRM1.44	200007814	ELAW1030	1	=ES+S/53.2	Cable	3 x 1.0 mm2	1119 203	Lapp
WRM1.45	200007814	ELAW1030	1	=ES+S/54.2	Cable	3 x 1.0 mm2	1119 203	Lapp
WRM1.46	200007814	ELAW1030	1	=ES+S/55.2	Cable	3 x 1.0 mm2	1119 203	Lapp
WRM1.47	200007814	ELAW1030	1	=ES+S/56.2	Cable	3 x 1.0 mm2	1119 203	Lapp
WRM1.48	200007814	ELAW1030	1	=ES+S/57.2	Cable	3 x 1.0 mm2	1119 203	Lapp
WRM1.49	200007814	ELAW1030	1	=ES+S/59.2	Cable	3 x 1.0 mm2	1119 203	Lapp
WRM1.50	200007814	ELAW1030	1	=ES+S/60.2	Cable	3 x 1.0 mm2	1119 203	Lapp
WRM1.51	200007814	ELAW1030	1	=ES+S/61.2	Cable	3 x 1.0 mm2	1119 203	Lapp
WRM1.52	200007814	ELAW1030	1	=ES+S/62.2	Cable	3 x 1.0 mm2	1119 203	Lapp
WRM1.53	200007814	ELAW1030	1	=ES+S/63.2	Cable	3 x 1.0 mm2	1119 203	Lapp
WRM1.54	200007814	ELAW1030	1	=ES+S/64.2	Cable	3 x 1.0 mm2	1119 203	Lapp
WRM1.55	200007814	ELAW1030	1	=ES+S/68.2	Cable	3 x 1.0 mm2	1119 203	Lapp
WRM1.56	200007814	ELAW1030	1	=ES+S/69.2	Cable	3 x 1.0 mm2	1119 203	Lapp
WRM1.57	200007814	ELAW1030	1	=ES+S/70.2	Cable	3 x 1.0 mm2	1119 203	Lapp
WRM1.58	200007814	ELAW1030	1	=ES+S/71.2	Cable	3 x 1.0 mm2	1119 203	Lapp
WRM1.59	200007814	ELAW1030	1	=ES+S/72.2	Cable	3 x 1.0 mm2	1119 203	Lapp
WRM1.60	200007814	ELAW1030	1	=ES+S/73.2	Cable	3 x 1.0 mm2	1119 203	Lapp
WRM1.61	200007814	ELAW1030	1	=ES+S/75.2	Cable	3 x 1.0 mm2	1119 203	Lapp
WRM1.62	200007814	ELAW1030	1	=ES+S/76.2	Cable	3 x 1.0 mm2	1119 203	Lapp
WRM1.63	200007814	ELAW1030	1	=ES+S/77.2	Cable	3 x 1.0 mm2	1119 203	Lapp
WRM1.64	200007814	ELAW1030	1	=ES+S/78.2	Cable	3 x 1.0 mm2	1119 203	Lapp
WRM1.65	200007814	ELAW1030	1	=ES+S/79.2	Cable	3 x 1.0 mm2	1119 203	Lapp
WRM1.66	200007814	ELAW1030	1	=ES+S/80.2	Cable	3 x 1.0 mm2	1119 203	Lapp
WRM1.67	200007814	ELAW1030	1	=ES+S/82.2	Cable	3 x 1.0 mm2	1119 203	Lapp
WRM1.68	200007814	ELAW1030	1	=ES+S/83.2	Cable	3 x 1.0 mm2	1119 203	Lapp
WRM1.69	200007814	ELAW1030	1	=ES+S/84.2	Cable	3 x 1.0 mm2	1119 203	Lapp

Parts list

mechanical construction

Artikelstückliste_Mech_SAP_001

DT	Part number new	Part number old	Quantity	Placement	Designation 1	Designation 2	Order number	Manufacturer
WRM1.70	200007814	ELAW1030	1	=ES+S/85.2	Cable	3 x 1.0 mm2	1119 203	Lapp
WRM1.71	200007814	ELAW1030	1	=ES+S/86.2	Cable	3 x 1.0 mm2	1119 203	Lapp
WRM1.72	200007814	ELAW1030	1	=ES+S/87.2	Cable	3 x 1.0 mm2	1119 203	Lapp
WRM1.73	200007814	ELAW1030	1	=ES+S/89.2	Cable	3 x 1.0 mm2	1119 203	Lapp
WRM1.74	200007814	ELAW1030	1	=ES+S/90.2	Cable	3 x 1.0 mm2	1119 203	Lapp
WRM1.75	200007814	ELAW1030	1	=ES+S/91.2	Cable	3 x 1.0 mm2	1119 203	Lapp
WRM1.76	200007814	ELAW1030	1	=ES+S/92.2	Cable	3 x 1.0 mm2	1119 203	Lapp
WRM1.77	200007814	ELAW1030	1	=ES+S/93.2	Cable	3 x 1.0 mm2	1119 203	Lapp
WRM1.78	200007814	ELAW1030	1	=ES+S/94.2	Cable	3 x 1.0 mm2	1119 203	Lapp
WRM1.79	200007814	ELAW1030	1	=ES+S/96.2	Cable	3 x 1.0 mm2	1119 203	Lapp
WRM1.80	200007814	ELAW1030	1	=ES+S/97.2	Cable	3 x 1.0 mm2	1119 203	Lapp
WRM1.81	200007814	ELAW1030	1	=ES+S/98.2	Cable	3 x 1.0 mm2	1119 203	Lapp
WRM1.82	200007814	ELAW1030	1	=ES+S/99.2	Cable	3 x 1.0 mm2	1119 203	Lapp
WRM1.83	200007814	ELAW1030	1	=ES+S/100.2	Cable	3 x 1.0 mm2	1119 203	Lapp
WRM1.84	200007814	ELAW1030	1	=ES+S/101.2	Cable	3 x 1.0 mm2	1119 203	Lapp
WRM1.85	200007814	ELAW1030	1	=ES+S/103.2	Cable	3 x 1.0 mm2	1119 203	Lapp
WRM1.86	200007814	ELAW1030	1	=ES+S/104.2	Cable	3 x 1.0 mm2	1119 203	Lapp
WRM1.87	200007814	ELAW1030	1	=ES+S/105.2	Cable	3 x 1.0 mm2	1119 203	Lapp
WRM1.88	200007814	ELAW1030	1	=ES+S/106.2	Cable	3 x 1.0 mm2	1119 203	Lapp
WRM1.89	200007814	ELAW1030	1	=ES+S/107.2	Cable	3 x 1.0 mm2	1119 203	Lapp
WRM1.90	200007814	ELAW1030	1	=ES+S/108.2	Cable	3 x 1.0 mm2	1119 203	Lapp
WRM1.91	200007814	ELAW1030	1	=ES+S/110.2	Cable	3 x 1.0 mm2	1119 203	Lapp
WRM1.92	200007814	ELAW1030	1	=ES+S/111.2	Cable	3 x 1.0 mm2	1119 203	Lapp
WRM1.93	200007814	ELAW1030	1	=ES+S/112.2	Cable	3 x 1.0 mm2	1119 203	Lapp
WRM1.95	200007814	ELAW1030	1	=ES+S/113.2	Cable	3 x 1.0 mm2	1119 203	Lapp
WRM1.97	200007814	ELAW1030	1	=ES+S/114.2	Cable	3 x 1.0 mm2	1119 203	Lapp
WRM1.99	200007814	ELAW1030	1	=ES+S/115.2	Cable	3 x 1.0 mm2	1119 203	Lapp
WRM1.101	200007814	ELAW1030	1	=ES+S/117.2	Cable	3 x 1.0 mm2	1119 203	Lapp
WRM1.102	200007814	ELAW1030	1	=ES+S/118.2	Cable	3 x 1.0 mm2	1119 203	Lapp
WRM2.1	200007814	ELAW1030	1	=ES+S/119.2	Cable	3 x 1.0 mm2	1119 203	Lapp
WRM2.2	200007814	ELAW1030	1	=ES+S/120.2	Cable	3 x 1.0 mm2	1119 203	Lapp
WRM2.3	200007814	ELAW1030	1	=ES+S/121.2	Cable	3 x 1.0 mm2	1119 203	Lapp
WRM2.4	200007814	ELAW1030	1	=ES+S/122.2	Cable	3 x 1.0 mm2	1119 203	Lapp
WRM2.5	200007814	ELAW1030	1	=ES+S/123.2	Cable	3 x 1.0 mm2	1119 203	Lapp
WRM2.6	200007814	ELAW1030	1	=ES+S/125.2	Cable	3 x 1.0 mm2	1119 203	Lapp
WRM2.7	200007814	ELAW1030	1	=ES+S/126.2	Cable	3 x 1.0 mm2	1119 203	Lapp
WRM2.8	200007814	ELAW1030	1	=ES+S/127.2	Cable	3 x 1.0 mm2	1119 203	Lapp
WRM2.9	200007814	ELAW1030	1	=ES+S/128.2	Cable	3 x 1.0 mm2	1119 203	Lapp

Parts list

mechanical construction

Artikelstückliste_Mech_SAP_001

DT	Part number new	Part number old	Quantity	Placement	Designation 1	Designation 2	Order number	Manufacturer
WRM2.10	200007814	ELAW1030	1	=ES+S/129.2	Cable	3 x 1.0 mm2	1119 203	Lapp
WRM2.11	200007814	ELAW1030	1	=ES+S/133.2	Cable	3 x 1.0 mm2	1119 203	Lapp
WRM2.12	200007814	ELAW1030	1	=ES+S/134.2	Cable	3 x 1.0 mm2	1119 203	Lapp
WRM2.13	200007814	ELAW1030	1	=ES+S/135.2	Cable	3 x 1.0 mm2	1119 203	Lapp
WRM2.14	200007814	ELAW1030	1	=ES+S/136.2	Cable	3 x 1.0 mm2	1119 203	Lapp
WRM2.15	200007814	ELAW1030	1	=ES+S/137.2	Cable	3 x 1.0 mm2	1119 203	Lapp
WRM2.16	200007814	ELAW1030	1	=ES+S/138.2	Cable	3 x 1.0 mm2	1119 203	Lapp
WRM2.17	200007814	ELAW1030	1	=ES+S/140.2	Cable	3 x 1.0 mm2	1119 203	Lapp
WRM2.18	200007814	ELAW1030	1	=ES+S/141.2	Cable	3 x 1.0 mm2	1119 203	Lapp
WRM2.19	200007814	ELAW1030	1	=ES+S/142.2	Cable	3 x 1.0 mm2	1119 203	Lapp
WRM2.20	200007814	ELAW1030	1	=ES+S/143.2	Cable	3 x 1.0 mm2	1119 203	Lapp
WRM2.21	200007814	ELAW1030	1	=ES+S/144.2	Cable	3 x 1.0 mm2	1119 203	Lapp
WRM2.22	200007814	ELAW1030	1	=ES+S/145.2	Cable	3 x 1.0 mm2	1119 203	Lapp
WRM2.23	200007814	ELAW1030	1	=ES+S/147.2	Cable	3 x 1.0 mm2	1119 203	Lapp
WRM2.24	200007814	ELAW1030	1	=ES+S/148.2	Cable	3 x 1.0 mm2	1119 203	Lapp
WRM2.25	200007814	ELAW1030	1	=ES+S/149.2	Cable	3 x 1.0 mm2	1119 203	Lapp
WRM2.26	200007814	ELAW1030	1	=ES+S/150.2	Cable	3 x 1.0 mm2	1119 203	Lapp
WRM2.27	200007814	ELAW1030	1	=ES+S/151.2	Cable	3 x 1.0 mm2	1119 203	Lapp
WRM2.28	200007814	ELAW1030	1	=ES+S/152.2	Cable	3 x 1.0 mm2	1119 203	Lapp
WRM2.29	200007814	ELAW1030	1	=ES+S/154.2	Cable	3 x 1.0 mm2	1119 203	Lapp
WRM2.30	200007814	ELAW1030	1	=ES+S/155.2	Cable	3 x 1.0 mm2	1119 203	Lapp
WRM2.31	200007814	ELAW1030	1	=ES+S/156.2	Cable	3 x 1.0 mm2	1119 203	Lapp
WRM2.32	200007814	ELAW1030	1	=ES+S/157.2	Cable	3 x 1.0 mm2	1119 203	Lapp
WRM2.33	200007814	ELAW1030	1	=ES+S/158.2	Cable	3 x 1.0 mm2	1119 203	Lapp
WRM2.34	200007814	ELAW1030	1	=ES+S/159.2	Cable	3 x 1.0 mm2	1119 203	Lapp
WRM2.35	200007814	ELAW1030	1	=ES+S/161.2	Cable	3 x 1.0 mm2	1119 203	Lapp
WRM2.36	200007814	ELAW1030	1	=ES+S/162.2	Cable	3 x 1.0 mm2	1119 203	Lapp
WRM2.37	200007814	ELAW1030	1	=ES+S/163.2	Cable	3 x 1.0 mm2	1119 203	Lapp
WRM2.38	200007814	ELAW1030	1	=ES+S/164.2	Cable	3 x 1.0 mm2	1119 203	Lapp
WRM2.39	200007814	ELAW1030	1	=ES+S/165.2	Cable	3 x 1.0 mm2	1119 203	Lapp
WRM2.40	200007814	ELAW1030	1	=ES+S/166.2	Cable	3 x 1.0 mm2	1119 203	Lapp
WRM2.41	200007814	ELAW1030	1	=ES+S/168.2	Cable	3 x 1.0 mm2	1119 203	Lapp
WRM2.42	200007814	ELAW1030	1	=ES+S/169.2	Cable	3 x 1.0 mm2	1119 203	Lapp
WRM2.43	200007814	ELAW1030	1	=ES+S/170.2	Cable	3 x 1.0 mm2	1119 203	Lapp
WRM2.44	200007814	ELAW1030	1	=ES+S/171.2	Cable	3 x 1.0 mm2	1119 203	Lapp
WRM2.45	200007814	ELAW1030	1	=ES+S/172.2	Cable	3 x 1.0 mm2	1119 203	Lapp
WRM2.46	200007814	ELAW1030	1	=ES+S/173.2	Cable	3 x 1.0 mm2	1119 203	Lapp
WRM2.47	200007814	ELAW1030	1	=ES+S/175.2	Cable	3 x 1.0 mm2	1119 203	Lapp

Parts list

mechanical construction

Artikelstückliste_Mech_SAP_001

DT	Part number new	Part number old	Quantity	Placement	Designation 1	Designation 2	Order number	Manufacturer
WRM2.48	200007814	ELAW1030	1	=ES+S/176.2	Cable	3 x 1.0 mm2	1119 203	Lapp
WRM2.49	200007814	ELAW1030	1	=ES+S/177.2	Cable	3 x 1.0 mm2	1119 203	Lapp
WRM2.50	200007814	ELAW1030	1	=ES+S/178.2	Cable	3 x 1.0 mm2	1119 203	Lapp
WRM2.51	200007814	ELAW1030	1	=ES+S/179.2	Cable	3 x 1.0 mm2	1119 203	Lapp
WRM2.52	200007814	ELAW1030	1	=ES+S/180.2	Cable	3 x 1.0 mm2	1119 203	Lapp
WRM2.53	200007814	ELAW1030	1	=ES+S/182.2	Cable	3 x 1.0 mm2	1119 203	Lapp
WRM2.54	200007814	ELAW1030	1	=ES+S/183.2	Cable	3 x 1.0 mm2	1119 203	Lapp
WRM2.55	200007814	ELAW1030	1	=ES+S/184.2	Cable	3 x 1.0 mm2	1119 203	Lapp
WRM2.56	200007814	ELAW1030	1	=ES+S/185.2	Cable	3 x 1.0 mm2	1119 203	Lapp
WRM2.57	200007814	ELAW1030	1	=ES+S/186.2	Cable	3 x 1.0 mm2	1119 203	Lapp
WRM2.58	200007814	ELAW1030	1	=ES+S/187.2	Cable	3 x 1.0 mm2	1119 203	Lapp
WRM2.59	200007814	ELAW1030	1	=ES+S/189.2	Cable	3 x 1.0 mm2	1119 203	Lapp
WRM2.60	200007814	ELAW1030	1	=ES+S/190.2	Cable	3 x 1.0 mm2	1119 203	Lapp
WRM2.61	200007814	ELAW1030	1	=ES+S/191.2	Cable	3 x 1.0 mm2	1119 203	Lapp
WRM2.62	200007814	ELAW1030	1	=ES+S/192.2	Cable	3 x 1.0 mm2	1119 203	Lapp
WRM2.63	200007814	ELAW1030	1	=ES+S/193.2	Cable	3 x 1.0 mm2	1119 203	Lapp
WRM31	200007977	ELAW6433	1	=ES+S/208.2	Cable	3 x 0,75 mm2	0035 710	Lapp
WSN2	200007855	ELAW1180	1	=ES+S/264.0	----------	18 x 1.0 mm2	1119 218	Lapp
WT7	200007816	ELAW1031	1	=ES+S/210.3	Cable	3 x 1.5 mm2	1119 303	Lapp
WXBE336	200007890	ELAW2220	1	=ES+S/299.2	Cable	4x2x0,34 mm2	0031327	Lapp
WXBE400	200007890	ELAW2220	1	=ES+S/311.4	Cable	4x2x0,34 mm2	0031327	Lapp
WXBM1.1	200007890	ELAW2220	1	=ES+S/3.4	Cable	4x2x0,34 mm2	0031327	Lapp
WXBM1.2	200007890	ELAW2220	1	=ES+S/4.4	Cable	4x2x0,34 mm2	0031327	Lapp
WXBM1.3	200007890	ELAW2220	1	=ES+S/5.4	Cable	4x2x0,34 mm2	0031327	Lapp
WXBM1.4	200007890	ELAW2220	1	=ES+S/6.4	Cable	4x2x0,34 mm2	0031327	Lapp
WXBM1.5	200007890	ELAW2220	1	=ES+S/7.4	Cable	4x2x0,34 mm2	0031327	Lapp
WXBM1.6	200007890	ELAW2220	1	=ES+S/8.4	Cable	4x2x0,34 mm2	0031327	Lapp
WXBM1.7	200007890	ELAW2220	1	=ES+S/10.4	Cable	4x2x0,34 mm2	0031327	Lapp
WXBM1.8	200007890	ELAW2220	1	=ES+S/11.4	Cable	4x2x0,34 mm2	0031327	Lapp
WXBM1.9	200007890	ELAW2220	1	=ES+S/12.4	Cable	4x2x0,34 mm2	0031327	Lapp
WXBM1.10	200007890	ELAW2220	1	=ES+S/13.4	Cable	4x2x0,34 mm2	0031327	Lapp
WXBM1.11	200007890	ELAW2220	1	=ES+S/14.4	Cable	4x2x0,34 mm2	0031327	Lapp
WXBM1.12	200007890	ELAW2220	1	=ES+S/15.4	Cable	4x2x0,34 mm2	0031327	Lapp
WXBM1.13	200007890	ELAW2220	1	=ES+S/17.4	Cable	4x2x0,34 mm2	0031327	Lapp
WXBM1.14	200007890	ELAW2220	1	=ES+S/18.4	Cable	4x2x0,34 mm2	0031327	Lapp
WXBM1.15	200007890	ELAW2220	1	=ES+S/19.4	Cable	4x2x0,34 mm2	0031327	Lapp
WXBM1.16	200007890	ELAW2220	1	=ES+S/20.4	Cable	4x2x0,34 mm2	0031327	Lapp
WXBM1.17	200007890	ELAW2220	1	=ES+S/21.4	Cable	4x2x0,34 mm2	0031327	Lapp

Parts list

mechanical construction

Artikelstückliste_Mech_SAP_001

DT	Part number new	Part number old	Quantity	Placement	Designation 1	Designation 2	Order number	Manufacturer
WXBM1.18	200007890	ELAW2220	1	=ES+S/22.4	Cable	4x2x0,34 mm2	0031327	Lapp
WXBM1.19	200007890	ELAW2220	1	=ES+S/24.4	Cable	4x2x0,34 mm2	0031327	Lapp
WXBM1.20	200007890	ELAW2220	1	=ES+S/25.4	Cable	4x2x0,34 mm2	0031327	Lapp
WXBM1.21	200007890	ELAW2220	1	=ES+S/26.4	Cable	4x2x0,34 mm2	0031327	Lapp
WXBM1.22	200007890	ELAW2220	1	=ES+S/27.4	Cable	4x2x0,34 mm2	0031327	Lapp
WXBM1.23	200007890	ELAW2220	1	=ES+S/28.4	Cable	4x2x0,34 mm2	0031327	Lapp
WXBM1.24	200007890	ELAW2220	1	=ES+S/29.4	Cable	4x2x0,34 mm2	0031327	Lapp
WXBM1.25	200007890	ELAW2220	1	=ES+S/31.4	Cable	4x2x0,34 mm2	0031327	Lapp
WXBM1.26	200007890	ELAW2220	1	=ES+S/32.4	Cable	4x2x0,34 mm2	0031327	Lapp
WXBM1.27	200007890	ELAW2220	1	=ES+S/33.4	Cable	4x2x0,34 mm2	0031327	Lapp
WXBM1.28	200007890	ELAW2220	1	=ES+S/34.4	Cable	4x2x0,34 mm2	0031327	Lapp
WXBM1.29	200007890	ELAW2220	1	=ES+S/35.4	Cable	4x2x0,34 mm2	0031327	Lapp
WXBM1.30	200007890	ELAW2220	1	=ES+S/36.4	Cable	4x2x0,34 mm2	0031327	Lapp
WXBM1.31	200007890	ELAW2220	1	=ES+S/38.4	Cable	4x2x0,34 mm2	0031327	Lapp
WXBM1.32	200007890	ELAW2220	1	=ES+S/39.4	Cable	4x2x0,34 mm2	0031327	Lapp
WXBM1.33	200007890	ELAW2220	1	=ES+S/40.4	Cable	4x2x0,34 mm2	0031327	Lapp
WXBM1.34	200007890	ELAW2220	1	=ES+S/41.4	Cable	4x2x0,34 mm2	0031327	Lapp
WXBM1.35	200007890	ELAW2220	1	=ES+S/42.4	Cable	4x2x0,34 mm2	0031327	Lapp
WXBM1.36	200007890	ELAW2220	1	=ES+S/43.4	Cable	4x2x0,34 mm2	0031327	Lapp
WXBM1.37	200007890	ELAW2220	1	=ES+S/45.4	Cable	4x2x0,34 mm2	0031327	Lapp
WXBM1.38	200007890	ELAW2220	1	=ES+S/46.4	Cable	4x2x0,34 mm2	0031327	Lapp
WXBM1.39	200007890	ELAW2220	1	=ES+S/47.4	Cable	4x2x0,34 mm2	0031327	Lapp
WXBM1.40	200007890	ELAW2220	1	=ES+S/48.4	Cable	4x2x0,34 mm2	0031327	Lapp
WXBM1.41	200007890	ELAW2220	1	=ES+S/49.4	Cable	4x2x0,34 mm2	0031327	Lapp
WXBM1.42	200007890	ELAW2220	1	=ES+S/50.4	Cable	4x2x0,34 mm2	0031327	Lapp
WXBM1.43	200007890	ELAW2220	1	=ES+S/52.4	Cable	4x2x0,34 mm2	0031327	Lapp
WXBM1.44	200007890	ELAW2220	1	=ES+S/53.4	Cable	4x2x0,34 mm2	0031327	Lapp
WXBM1.45	200007890	ELAW2220	1	=ES+S/54.4	Cable	4x2x0,34 mm2	0031327	Lapp
WXBM1.46	200007890	ELAW2220	1	=ES+S/55.4	Cable	4x2x0,34 mm2	0031327	Lapp
WXBM1.47	200007890	ELAW2220	1	=ES+S/56.4	Cable	4x2x0,34 mm2	0031327	Lapp
WXBM1.48	200007890	ELAW2220	1	=ES+S/57.4	Cable	4x2x0,34 mm2	0031327	Lapp
WXBM1.49	200007890	ELAW2220	1	=ES+S/59.4	Cable	4x2x0,34 mm2	0031327	Lapp
WXBM1.50	200007890	ELAW2220	1	=ES+S/60.4	Cable	4x2x0,34 mm2	0031327	Lapp
WXBM1.51	200007890	ELAW2220	1	=ES+S/61.4	Cable	4x2x0,34 mm2	0031327	Lapp
WXBM1.52	200007890	ELAW2220	1	=ES+S/62.4	Cable	4x2x0,34 mm2	0031327	Lapp
WXBM1.53	200007890	ELAW2220	1	=ES+S/63.4	Cable	4x2x0,34 mm2	0031327	Lapp
WXBM1.54	200007890	ELAW2220	1	=ES+S/64.4	Cable	4x2x0,34 mm2	0031327	Lapp
WXBM1.55	200007890	ELAW2220	1	=ES+S/68.4	Cable	4x2x0,34 mm2	0031327	Lapp

Parts list

mechanical construction

Artikelstückliste_Mech_SAP_001

DT	Part number new	Part number old	Quantity	Placement	Designation 1	Designation 2	Order number	Manufacturer
WXBM1.56	200007890	ELAW2220	1	=ES+S/69.4	Cable	4x2x0,34 mm2	0031327	Lapp
WXBM1.57	200007890	ELAW2220	1	=ES+S/70.4	Cable	4x2x0,34 mm2	0031327	Lapp
WXBM1.58	200007890	ELAW2220	1	=ES+S/71.4	Cable	4x2x0,34 mm2	0031327	Lapp
WXBM1.59	200007890	ELAW2220	1	=ES+S/72.4	Cable	4x2x0,34 mm2	0031327	Lapp
WXBM1.60	200007890	ELAW2220	1	=ES+S/73.4	Cable	4x2x0,34 mm2	0031327	Lapp
WXBM1.61	200007890	ELAW2220	1	=ES+S/75.4	Cable	4x2x0,34 mm2	0031327	Lapp
WXBM1.62	200007890	ELAW2220	1	=ES+S/76.4	Cable	4x2x0,34 mm2	0031327	Lapp
WXBM1.63	200007890	ELAW2220	1	=ES+S/77.4	Cable	4x2x0,34 mm2	0031327	Lapp
WXBM1.64	200007890	ELAW2220	1	=ES+S/78.4	Cable	4x2x0,34 mm2	0031327	Lapp
WXBM1.65	200007890	ELAW2220	1	=ES+S/79.4	Cable	4x2x0,34 mm2	0031327	Lapp
WXBM1.66	200007890	ELAW2220	1	=ES+S/80.4	Cable	4x2x0,34 mm2	0031327	Lapp
WXBM1.67	200007890	ELAW2220	1	=ES+S/82.4	Cable	4x2x0,34 mm2	0031327	Lapp
WXBM1.68	200007890	ELAW2220	1	=ES+S/83.4	Cable	4x2x0,34 mm2	0031327	Lapp
WXBM1.69	200007890	ELAW2220	1	=ES+S/84.4	Cable	4x2x0,34 mm2	0031327	Lapp
WXBM1.70	200007890	ELAW2220	1	=ES+S/85.4	Cable	4x2x0,34 mm2	0031327	Lapp
WXBM1.71	200007890	ELAW2220	1	=ES+S/86.4	Cable	4x2x0,34 mm2	0031327	Lapp
WXBM1.72	200007890	ELAW2220	1	=ES+S/87.4	Cable	4x2x0,34 mm2	0031327	Lapp
WXBM1.73	200007890	ELAW2220	1	=ES+S/89.4	Cable	4x2x0,34 mm2	0031327	Lapp
WXBM1.74	200007890	ELAW2220	1	=ES+S/90.4	Cable	4x2x0,34 mm2	0031327	Lapp
WXBM1.75	200007890	ELAW2220	1	=ES+S/91.4	Cable	4x2x0,34 mm2	0031327	Lapp
WXBM1.76	200007890	ELAW2220	1	=ES+S/92.4	Cable	4x2x0,34 mm2	0031327	Lapp
WXBM1.77	200007890	ELAW2220	1	=ES+S/93.4	Cable	4x2x0,34 mm2	0031327	Lapp
WXBM1.78	200007890	ELAW2220	1	=ES+S/94.4	Cable	4x2x0,34 mm2	0031327	Lapp
WXBM1.79	200007890	ELAW2220	1	=ES+S/96.4	Cable	4x2x0,34 mm2	0031327	Lapp
WXBM1.80	200007890	ELAW2220	1	=ES+S/97.4	Cable	4x2x0,34 mm2	0031327	Lapp
WXBM1.81	200007890	ELAW2220	1	=ES+S/98.4	Cable	4x2x0,34 mm2	0031327	Lapp
WXBM1.82	200007890	ELAW2220	1	=ES+S/99.4	Cable	4x2x0,34 mm2	0031327	Lapp
WXBM1.83	200007890	ELAW2220	1	=ES+S/100.4	Cable	4x2x0,34 mm2	0031327	Lapp
WXBM1.84	200007890	ELAW2220	1	=ES+S/101.4	Cable	4x2x0,34 mm2	0031327	Lapp
WXBM1.85	200007890	ELAW2220	1	=ES+S/103.4	Cable	4x2x0,34 mm2	0031327	Lapp
WXBM1.86	200007890	ELAW2220	1	=ES+S/104.4	Cable	4x2x0,34 mm2	0031327	Lapp
WXBM1.87	200007890	ELAW2220	1	=ES+S/105.4	Cable	4x2x0,34 mm2	0031327	Lapp
WXBM1.88	200007890	ELAW2220	1	=ES+S/106.4	Cable	4x2x0,34 mm2	0031327	Lapp
WXBM1.89	200007890	ELAW2220	1	=ES+S/107.4	Cable	4x2x0,34 mm2	0031327	Lapp
WXBM1.90	200007890	ELAW2220	1	=ES+S/108.4	Cable	4x2x0,34 mm2	0031327	Lapp
WXBM1.91	200007890	ELAW2220	1	=ES+S/110.4	Cable	4x2x0,34 mm2	0031327	Lapp
WXBM1.92	200007890	ELAW2220	1	=ES+S/111.4	Cable	4x2x0,34 mm2	0031327	Lapp
WXBM1.93	200007890	ELAW2220	1	=ES+S/112.4	Cable	4x2x0,34 mm2	0031327	Lapp

Parts list

mechanical construction

Artikelstückliste_Mech_SAP_001

DT	Part number new	Part number old	Quantity	Placement	Designation 1	Designation 2	Order number	Manufacturer
WXBM1.95	200007890	ELAW2220	1	=ES+S/113.4	Cable	4x2x0,34 mm2	0031327	Lapp
WXBM1.97	200007890	ELAW2220	1	=ES+S/114.4	Cable	4x2x0,34 mm2	0031327	Lapp
WXBM1.99	200007890	ELAW2220	1	=ES+S/115.4	Cable	4x2x0,34 mm2	0031327	Lapp
WXBM1.101	200007890	ELAW2220	1	=ES+S/117.4	Cable	4x2x0,34 mm2	0031327	Lapp
WXBM1.102	200007890	ELAW2220	1	=ES+S/118.4	Cable	4x2x0,34 mm2	0031327	Lapp
WXBM2.1	200007890	ELAW2220	1	=ES+S/119.4	Cable	4x2x0,34 mm2	0031327	Lapp
WXBM2.2	200007890	ELAW2220	1	=ES+S/120.4	Cable	4x2x0,34 mm2	0031327	Lapp
WXBM2.3	200007890	ELAW2220	1	=ES+S/121.4	Cable	4x2x0,34 mm2	0031327	Lapp
WXBM2.4	200007890	ELAW2220	1	=ES+S/122.4	Cable	4x2x0,34 mm2	0031327	Lapp
WXBM2.5	200007890	ELAW2220	1	=ES+S/123.4	Cable	4x2x0,34 mm2	0031327	Lapp
WXBM2.6	200007890	ELAW2220	1	=ES+S/125.4	Cable	4x2x0,34 mm2	0031327	Lapp
WXBM2.7	200007890	ELAW2220	1	=ES+S/126.4	Cable	4x2x0,34 mm2	0031327	Lapp
WXBM2.8	200007890	ELAW2220	1	=ES+S/127.4	Cable	4x2x0,34 mm2	0031327	Lapp
WXBM2.9	200007890	ELAW2220	1	=ES+S/128.4	Cable	4x2x0,34 mm2	0031327	Lapp
WXBM2.10	200007890	ELAW2220	1	=ES+S/129.4	Cable	4x2x0,34 mm2	0031327	Lapp
WXBM2.11	200007890	ELAW2220	1	=ES+S/133.4	Cable	4x2x0,34 mm2	0031327	Lapp
WXBM2.12	200007890	ELAW2220	1	=ES+S/134.4	Cable	4x2x0,34 mm2	0031327	Lapp
WXBM2.13	200007890	ELAW2220	1	=ES+S/135.4	Cable	4x2x0,34 mm2	0031327	Lapp
WXBM2.14	200007890	ELAW2220	1	=ES+S/136.4	Cable	4x2x0,34 mm2	0031327	Lapp
WXBM2.15	200007890	ELAW2220	1	=ES+S/137.4	Cable	4x2x0,34 mm2	0031327	Lapp
WXBM2.16	200007890	ELAW2220	1	=ES+S/138.4	Cable	4x2x0,34 mm2	0031327	Lapp
WXBM2.17	200007890	ELAW2220	1	=ES+S/140.4	Cable	4x2x0,34 mm2	0031327	Lapp
WXBM2.18	200007890	ELAW2220	1	=ES+S/141.4	Cable	4x2x0,34 mm2	0031327	Lapp
WXBM2.19	200007890	ELAW2220	1	=ES+S/142.4	Cable	4x2x0,34 mm2	0031327	Lapp
WXBM2.20	200007890	ELAW2220	1	=ES+S/143.4	Cable	4x2x0,34 mm2	0031327	Lapp
WXBM2.21	200007890	ELAW2220	1	=ES+S/144.4	Cable	4x2x0,34 mm2	0031327	Lapp
WXBM2.22	200007890	ELAW2220	1	=ES+S/145.4	Cable	4x2x0,34 mm2	0031327	Lapp
WXBM2.23	200007890	ELAW2220	1	=ES+S/147.4	Cable	4x2x0,34 mm2	0031327	Lapp
WXBM2.24	200007890	ELAW2220	1	=ES+S/148.4	Cable	4x2x0,34 mm2	0031327	Lapp
WXBM2.25	200007890	ELAW2220	1	=ES+S/149.4	Cable	4x2x0,34 mm2	0031327	Lapp
WXBM2.26	200007890	ELAW2220	1	=ES+S/150.4	Cable	4x2x0,34 mm2	0031327	Lapp
WXBM2.27	200007890	ELAW2220	1	=ES+S/151.4	Cable	4x2x0,34 mm2	0031327	Lapp
WXBM2.28	200007890	ELAW2220	1	=ES+S/152.4	Cable	4x2x0,34 mm2	0031327	Lapp
WXBM2.29	200007890	ELAW2220	1	=ES+S/154.4	Cable	4x2x0,34 mm2	0031327	Lapp
WXBM2.30	200007890	ELAW2220	1	=ES+S/155.4	Cable	4x2x0,34 mm2	0031327	Lapp
WXBM2.31	200007890	ELAW2220	1	=ES+S/156.4	Cable	4x2x0,34 mm2	0031327	Lapp
WXBM2.32	200007890	ELAW2220	1	=ES+S/157.4	Cable	4x2x0,34 mm2	0031327	Lapp
WXBM2.33	200007890	ELAW2220	1	=ES+S/158.4	Cable	4x2x0,34 mm2	0031327	Lapp

Parts list

mechanical construction

Artikelstückliste_Mech_SAP_001

DT	Part number new	Part number old	Quantity	Placement	Designation 1	Designation 2	Order number	Manufacturer
WXBM2.34	200007890	ELAW2220	1	=ES+S/159.4	Cable	4x2x0,34 mm2	0031327	Lapp
WXBM2.35	200007890	ELAW2220	1	=ES+S/161.4	Cable	4x2x0,34 mm2	0031327	Lapp
WXBM2.36	200007890	ELAW2220	1	=ES+S/162.4	Cable	4x2x0,34 mm2	0031327	Lapp
WXBM2.37	200007890	ELAW2220	1	=ES+S/163.4	Cable	4x2x0,34 mm2	0031327	Lapp
WXBM2.38	200007890	ELAW2220	1	=ES+S/164.4	Cable	4x2x0,34 mm2	0031327	Lapp
WXBM2.39	200007890	ELAW2220	1	=ES+S/165.4	Cable	4x2x0,34 mm2	0031327	Lapp
WXBM2.40	200007890	ELAW2220	1	=ES+S/166.4	Cable	4x2x0,34 mm2	0031327	Lapp
WXBM2.41	200007890	ELAW2220	1	=ES+S/168.4	Cable	4x2x0,34 mm2	0031327	Lapp
WXBM2.42	200007890	ELAW2220	1	=ES+S/169.4	Cable	4x2x0,34 mm2	0031327	Lapp
WXBM2.43	200007890	ELAW2220	1	=ES+S/170.4	Cable	4x2x0,34 mm2	0031327	Lapp
WXBM2.44	200007890	ELAW2220	1	=ES+S/171.4	Cable	4x2x0,34 mm2	0031327	Lapp
WXBM2.45	200007890	ELAW2220	1	=ES+S/172.4	Cable	4x2x0,34 mm2	0031327	Lapp
WXBM2.46	200007890	ELAW2220	1	=ES+S/173.4	Cable	4x2x0,34 mm2	0031327	Lapp
WXBM2.47	200007890	ELAW2220	1	=ES+S/175.4	Cable	4x2x0,34 mm2	0031327	Lapp
WXBM2.48	200007890	ELAW2220	1	=ES+S/176.4	Cable	4x2x0,34 mm2	0031327	Lapp
WXBM2.49	200007890	ELAW2220	1	=ES+S/177.4	Cable	4x2x0,34 mm2	0031327	Lapp
WXBM2.50	200007890	ELAW2220	1	=ES+S/178.4	Cable	4x2x0,34 mm2	0031327	Lapp
WXBM2.51	200007890	ELAW2220	1	=ES+S/179.4	Cable	4x2x0,34 mm2	0031327	Lapp
WXBM2.52	200007890	ELAW2220	1	=ES+S/180.4	Cable	4x2x0,34 mm2	0031327	Lapp
WXBM2.53	200007890	ELAW2220	1	=ES+S/182.4	Cable	4x2x0,34 mm2	0031327	Lapp
WXBM2.54	200007890	ELAW2220	1	=ES+S/183.4	Cable	4x2x0,34 mm2	0031327	Lapp
WXBM2.55	200007890	ELAW2220	1	=ES+S/184.4	Cable	4x2x0,34 mm2	0031327	Lapp
WXBM2.56	200007890	ELAW2220	1	=ES+S/185.4	Cable	4x2x0,34 mm2	0031327	Lapp
WXBM2.57	200007890	ELAW2220	1	=ES+S/186.4	Cable	4x2x0,34 mm2	0031327	Lapp
WXBM2.58	200007890	ELAW2220	1	=ES+S/187.4	Cable	4x2x0,34 mm2	0031327	Lapp
WXBM2.59	200007890	ELAW2220	1	=ES+S/189.4	Cable	4x2x0,34 mm2	0031327	Lapp
WXBM2.60	200007890	ELAW2220	1	=ES+S/190.4	Cable	4x2x0,34 mm2	0031327	Lapp
WXBM2.61	200007890	ELAW2220	1	=ES+S/191.4	Cable	4x2x0,34 mm2	0031327	Lapp
WXBM2.62	200007890	ELAW2220	1	=ES+S/192.4	Cable	4x2x0,34 mm2	0031327	Lapp
WXBM2.63	200007890	ELAW2220	1	=ES+S/193.4	Cable	4x2x0,34 mm2	0031327	Lapp
WXCB1	200007850	ELAW1120	1	=ES+S/262.2	Cable	12 x 1.0 mm2	1119 212	Lapp
WYM3.51	200007816	ELAW1031	1	=ES+S/196.8	Cable	3 x 1.5 mm2	1119 303	Lapp
WYM3.52	200007816	ELAW1031	1	=ES+S/196.8	Cable	3 x 1.5 mm2	1119 303	Lapp
WYM8.41	200007816	ELAW1031	1	=ES+S/199.8	Cable	3 x 1.5 mm2	1119 303	Lapp
WYM8.42	200007816	ELAW1031	1	=ES+S/199.8	Cable	3 x 1.5 mm2	1119 303	Lapp
WYM8.43	200007816	ELAW1031	1	=ES+S/199.9	Cable	3 x 1.5 mm2	1119 303	Lapp

Summarized parts list electrical construction

Artikelsummenstückliste_Elo_SAP_001

	Part number new	Part number old	Quantity	Designation 1	Designation 2	Order number	Manufacturer
1	200005258	EBHX3201	7	Female receptacle	16 A 2 polig AB	X 129	Z & A
2	200005340	EBLT3205	2	transformer control voltage	5000 VA 400V/2x115V 50 Hz	BUST 5000/4/23	Block
3	200034666	EBNA4002	1	insulation monitor	A-Isometer AC0-793V	B91065109	Bender
4	200034133	EBNA9001	5	insulation monitor	24VDC	B71036403	Bender
5	200005656	ECRA0001	1	frame	für Betriebstundenzähler		Bauser
6	200005670	ECRP9001	1	Operating hours counter	24 V DC	630.3	Bauser
7	200005760	EDOK9004	2	EMERGENCY STOP safety switching device	24 V DC	BG 5925.02	Dold
8	200027849	EDSQ9021	10	maintenance switch	mit Hilfsschalter	KG 10 / T203/40KS51V	Deutsche Solenoid
9	200028869	EDSQ9022	1	maintenance switch	mit Hilfsschalter	KG 10 / T206/40KS51V	Deutsche Solenoid
10	200005804	EDSQ9032	4	maintenance switch	mit Hilfsschalter	KG 32-T203/40 KL51V	Deutsche Solenoid
11	200005805	EDSQ9040	1	maintenance switch	mit Hilfsschalter	KG 41B T206/40 KL71V	Deutsche Solenoid
12	200027853	EDSQ9101	1	maintenance switch	mit Hilfsschalter	KG 100-T203/40 KL71V	Deutsche Solenoid
13	200027854	EDSQ9102	8	maintenance switch	mit Hilfsschalter	KG 100-T203/D-A120 KL71V	Deutsche Solenoid
14	200006264	EFNK9013	18	relay	24 VDC / 1W	38.51.7.024.0050	Finder
15	200031229	EHPA0002	1	Ethernet Switch		646162	HP
16	200007024	EJUA0022	1	Safety temperature limiter	230 V AC Pt100	0253-001-02/205,245,056	Jumo
17	200007305	EKMQ9007	1	Terminals	4x50-240 qmm NZM4-XKA	266836	Möller
18	200009115	EPZA9000	1	memory card	32kByte	Nr. 779211	Pilz
19	200009117	EPZA9002	1	Multi-function control	20 Eing. / 4 Takta.	Nr. 773100	Pilz
20	200009118	EPZA9003	1	connecting terminal	für m1p / m0p	Nr. 793100	Pilz
21	200009120	EPZA9005	1	extension module	4 Halbleiterausgänge	Nr. 773500	Pilz
22	200009121	EPZA9006	2	connecting terminal	für mi1p / m01p	Nr. 793400	Pilz
23	200009122	EPZA9007	1	extension module	Feldbus	Nr. 773721	Pilz
24	200009123	EPZA9008	1	extension module	8 digitale Eingänge	Nr. 773400	Pilz
25	200029534	ERHA9003	3	isolation amplifier	24 VDC	N 00017	Rechner
26	200009203	ERIA0027	1	Switch plan pocket	600 mm	PS 4116	Rittal
27	200031234	ERIA0117	1	multiple socket	5-fach für 19"-Ebene	DK 7240.230	Rittal
28	200009329	ERIA0662L	1	Enclosure	600 x 600 x 210 RAL 7035	AE 1060.500	Rittal
29	200009363	ERIA1577	3	Bus housing	mit Fenster	BG 1577.560	Rittal
30	200009403	ERIA3027	10	ventilator	230 V / 50-60 Hz	SK 3327.107	Rittal
31	200009407	ERIA3035	14	filter	SK 3326.207	SK 3326.207	Rittal
32	200009408	ERIA3036	6	filter cover	SK 3148.007	SK 3148.007	Rittal
33	200009410	ERIA3047	9	ventilator	3Ph / 400/460V 50-60Hz	SK 3327.147	Rittal
34	200009543	ERIA8026	13	base side section	200 x 600	TS 8602.060	Rittal
35	200009547	ERIA8031	9	Mounting Angle		TS 8800.430	Rittal
36	200009550	ERIA8034	9	mounting accessories	Anreihzwinge	TS 8800.410	Rittal
37	200009553	ERIA8037	4	lifting lug	(VE=4 Stück)	TS 4540.000	Rittal
38	200009607	ERIA8106L	4	side panel	2000 x 600 mm	TS 8106.235	Rittal

Summarized parts list electrical construction

Artikelsummenstückliste_Elo_SAP_001

	Part number new	Part number old	Quantity	Designation 1	Designation 2	Order number	Manufacturer
39	200009624	ERIA8206L	13	Enclosure	1200 x 2000 x 600	TS 8206.500	Rittal
40	200009626	ERIA8220	13	base ahead behind	1200 x 200	TS 8602.200	Rittal
41	200009860	ESAA0462L	1	Enclosure	HxBxT 600x400x200 RAL 7035	Nr. 83026	Sarel
42	200010198	ESIA2400	161	operater panel	BOP für Micromaster 4	6SE6400-0BP00-0AA0	Siemens
43	200010239	ESIA3811	1	soft starter		3 RW 3026-1BB04	Siemens
44	200010240	ESIA3815	1	soft starter		3 RW 3027-1BB04	Siemens
45	200010242	ESIA3837	1	soft starter		3 RW 3038-1BB04	Siemens
46	200010244	ESIA4003	1	thermistor relay	24 V UC	3RN10 10-1CB00	Siemens
47	200030071	ESIA4302-N	158	frequency converter	MM440 380-480V / 2,2 KW	6SE 6440-2UD22-2BA1	Siemens
48	200030045	ESIA4305-N	1	frequency converter	MM440 380-480V / 5,5 KW	6SE 6440-2UD25-5CA1	Siemens
49	200030070	ESIA4307-N	2	frequency converter	MM440 380-480V / 7,5 KW	6SE 6440-2UD27-5CA1	Siemens
50	200030044	ESIA4337-N	8	frequency converter	MM440 380-480V / 37 KW	6SE 6440-2UD33-7EA1	Siemens
51	200010267	ESIA4391	8	operater panel	AOP für Micromaster 4	6SE6400-0AP00-0AA1	Siemens
52	200010268	ESIA4392	169	profibus module	für Micromaster 440	6SE6400-1PB00-0AA0	Siemens
53	200010269	ESIA4393	161	Pulse generator report	für Micromaster 4	6SE6400-0EN00-0AA0	Siemens
54	200010290	ESIA7003	1	profile rail	830 mm	6ES 7390-1AJ30-0AA0	Siemens
55	200010306	ESIA7020	1	plug	40 polig	6ES 7392-1AM00-0AA0	Siemens
56	200010309	ESIA7023	1	plug	20 polig	6ES 7392-1AJ00-0AA0	Siemens
57	200010310	ESIA7024	6	Profibus plug	90° / bis 12 MBit/s	6ES 7972-0BB50-0XA0	Siemens
58	200010315	ESIA7029	10	plug	20 pol. 2,5 m Kabel	6ES 7922-3BC50-5AB0	Siemens
59	200010317	ESIA7030	6	Profibus Repeater	Profibus - Bussystem	6ES 7972-0AA01-0XA0	Siemens
60	200010333	ESIA7047	169	Profibus plug	gerade / Schneidklemmen	6GK 1500-0FC00	Siemens
61	200010334	ESIA7048	1	connection box	DP für Mobiles Panel	6AV 6671-5AE10-0AX0	Siemens
62	200010335	ESIA7049	1	support	für Mobiles Panel	6AV 6574-1AF04-4AA0	Siemens
63	200010352	ESIA7082	1	Micro Memory Card	512 KByte	6ES 7953-8LJ20-0AA0	Siemens
64	200010354	ESIA7089	1	flex	für Mobiles Panel	6XV 1440-4AN20	Siemens
65	200010369	ESIA7135	1	analog Input	ET 200S / RTD	6ES 7134-4JB50-0AB0	Siemens
66	200029877	ESIA7136	43	Digital input	4 DI / 24VDC (VE = 5 Stück)	6ES 7131-4BD01-0AA0	Siemens
67	200029886	ESIA7137	7	Digital output	4 DO / 24VDC/0,5A (VE = 5 Stück)	6ES 7132-4BD01-0AA0	Siemens
68	200010373	ESIA7139	8	Power supply	PM-E 24VUC / 230VAC	6ES 7138-4CB10-0AB0	Siemens
69	200010381	ESIA7152	7	Module	IM 151-1	6ES 7151-1AA05-0AB0	Siemens
70	200010382	ESIA7153	1	activation	IM 153-1	6ES7153-1AA03-0XB0	Siemens
71	200010384	ESIA7158	3	profibus DP/DP coupler	IM 158	6ES 7158-0AD01-0XA0	Siemens
72	200010390	ESIA7195	8	Terminals	TM-P15C23-A0	6ES 7193-4CD30-0AA0	Siemens
73	200029887	ESIA7197	51	Terminals	TM-E15C26-A1	6ES 7193-4CA50-0AA0	Siemens
74	200028447	ESIA7310	1	CPU	315 - 2 PN/DP / 384 KByte	6ES 7315-2EH14-0AB0	Siemens
75	200010433	ESIA7321	4	Digital input	SM 321 / 16E / 24VDC	6ES 7321-1BH02-0AA0	Siemens
76	200010434	ESIA7322	5	Digital output	SM 322 / 16x0,5A / 24VDC	6ES 7322-1BH01-0AA0	Siemens

Summarized parts list electrical construction

Artikelsummenstückliste_Elo_SAP_001

	Part number new	Part number old	Quantity	Designation 1	Designation 2	Order number	Manufacturer
77	200010442	ESIA7331	1	analog input	SM 331 / 8-Kanal	6ES 7331-7KF02-0AB0	Siemens
78	200010449	ESIA7342	2	communication module	CP 342-5	6GK 7342-5DA02-0XE0	Siemens
79	200010455	ESIA7350	1	Counter assembly	FM 350-1	6ES 7350-1AH03-0AE0	Siemens
80	200010456	ESIA7351	1	Counter assembly	FM 350-2	6ES 7350-2AH00-0AE0	Siemens
81	200010475	ESIA7422	1	Mobile Panel 177	über Anschlußbox	6AV6645-0AC01-0AX0	Siemens
82	200010553	ESIF0012	21	auxiliary block	1S / 1Ö	5 SX 9100	Siemens
83	200010559	ESIF0106	7	Circuit breaker	1 x B6 A	5 SX 2 106-6	Siemens
84	200010561	ESIF0110	16	Circuit breaker	1 x B10 A	5 SX 2 110-6	Siemens
85	200010563	ESIF0116	1	Circuit breaker	1 x B16 A	5 SX 2 116-6	Siemens
86	200010569	ESIF0206	7	Circuit breaker	2 x B6 A	5 SX 2 206-6	Siemens
87	200010679	ESIF6400	3	fuse	NH 2 / 400A	3 NA 2260	Siemens
88	200010709	ESIH2002	1	Connection point luminous column	für Rohrmontage	8 WD 4408-0AA	Siemens
89	200010715	ESIH2008	1	mounting accessories	100 mm	8 WD 4308-0DA	Siemens
90	200010718	ESIH2012	1	luminous column red	BA 15d	8 WD 4400-1AB	Siemens
91	200010720	ESIH2022	1	luminous column green	BA 15d	8 WD 4400-1AC	Siemens
92	200010721	ESIH2032	1	luminous column yellow	BA 15d	8 WD 4400-1AD	Siemens
93	200010735	ESIH3040	2	Indicator light white	Frontelement	3 SB 3001-6BA60	Siemens
94	200010752	ESIH3420	1	Lamp green	LED für 24V AC/DC	3SB 3400-1PC	Siemens
95	200010756	ESIH3440	2	Lamp white	LED für 24V AC/DC	3SB 3400-1PE	Siemens
96	200010759	ESIH3451	4	Lamp blue	LED für 24V AC/DC, Bodenbefestigung	3SB 3420-1PD	Siemens
97	200010760	ESIH4006	3	Lamp	BA 15d / 24 V / 5 Watt	8 WD 4328-1XX	Siemens
98	200010806	ESIK2010	2	relay	1 Wechsler	3TX7 002-1BF00	Siemens
99	200010852	ESIK9119	1	Timerelais 24 V/UC	Rückfall. 0,05s-600s	3RP1540-1AB30	Siemens
100	200010886	ESIQ6001	1	Cover	lange Ausführung	3VL9800-8CA30	Siemens
101	200010887	ESIQ6002	1	Rotary drive kpl.	mit 300mm Verlängerungswelle	3VL9800-3HF05	Siemens
102	200028792	ESIQ6161	1	power circuit breaker	1600A	3VL8716-1SE30-0AA0	Siemens
103	200010916	ESIR4301	158	brake resistor	380-480 V PK 100W KONT	6SE6400-4BD11-0AA0	Siemens
104	200010917	ESIR4304	1	brake resistor	380-480 V PK 200W KONT	6SE6400-4BD12-0BA0	Siemens
105	200011034	ESIS1005	1	coordinate switch	4 Stellungen	3 SB 1208-7JW01	Siemens
106	200011049	ESIS3011	4	NC contact	Türeinbau	3 SB 3400-0C	Siemens
107	200011050	ESIS3012	4	NO contact	Türeinbau	3 SB 3400-0B	Siemens
108	200011052	ESIS3014	8	NC contact	Bodenbefestigung	3 SB 3420-0C	Siemens
109	200011053	ESIS3015	4	NO contact	Bodenbefestigung	3 SB 3420-0B	Siemens
110	200011057	ESIS3051	4	housing	1 Befehlsstelle	3 SB 3801-2AA3	Siemens
111	200011064	ESIS3062	3	console	Metallgehäuse gelb	3 SB 3801-2AD3	Siemens
112	200011071	ESIS3125	1	illuminated pushbutton green		3 SB 3001-0AA41	Siemens
113	200011081	ESIS3155	4	illuminated pushbutton blue		3 SB 3001-0AA51	Siemens
114	200011088	ESIS3202	1	selector switch	2 Stell. / rastend	3 SB 3000-2KA11	Siemens

Summarized parts list electrical construction

Artikelsummenstückliste_Elo_SAP_001

	Part number new	Part number old	Quantity	Designation 1	Designation 2	Order number	Manufacturer
115	200011102	ESIS3504	1	key switch	RONIS SB 30 (1+0+2 abziebar)	3 SB 3000-4DD11	Siemens
116	200011116	ESIS3900	1	shroud yellow	für 3SB3	3 SB 3921-0AK	Siemens
117	200011117	ESIS3901	6	mushroom pushbutton	40 mm / verrastend	3 SB 3000-1HA20	Siemens
118	200011204	ESIT3924	5	Power supply unit	SITOP Modular ger. Sec.: 24 V/DC / 40A	6 EP 1437-3BA00	Siemens
119	200011320	ESIZ0062	1	tele service	TS - Adapter II	6ES7972-0CB35-0XA0	Siemens
120	200011393	ESIZ2401	158	Screen connection record	MICRO MASTER 420	6SE6400-0GP00-0BA0	Siemens
121	200011394	ESIZ2402	3	Screen connection record	für MICRO MASTER 420	6SE6400-0GP00-0CA0	Siemens
122	200031768	ESIZ4203	158	net commutation inductor	für MM4 - 2,2 - 3kW	6SE6400-3CC01-0BD3	Siemens
123	200029739	ESIZ4207	3	net commutation inductor	für MM4 - 5,5 - 7,5kW	6SE6400-3CC02-2CD3	Siemens
124	200031769	ESIZ4237	8	net commutation inductor	für MM4 - 30 - 37kW	6SE6400-3CC08-3ED0	Siemens
125	200011491	ESJK0002	64	Terminals Cover	für Schütz S2	3RT1936-4EA2	Siemens
126	200011492	ESJK0003	27	Terminals Cover	für Schütz S3	3RT1946-4EA2	Siemens
127	200011497	ESJK0022	20	auxiliary block	HS / 2S+2Ö	3RH1911-1GA22	Siemens
128	200011501	ESJK0122	2	auxiliary block	LS (S00) / 2S+2Ö	3RH1911-1HA22	Siemens
129	200011503	ESJK0131	3	auxiliary block	LS (S0-S12) / 3S+1Ö	3RH1921-1HA31	Siemens
130	200011505	ESJK0301	1	Connection	Größe S00 phasengleich	3RA1913-3D	Siemens
131	200011506	ESJK0302	1	Connection	Größe S00 phasentausch	3RA1913-2A	Siemens
132	200011549	ESJK9022	16	auxiliary contactor	24 VDC / 2S+2Ö	3RH1122-1BB40	Siemens
133	200011551	ESJK9040	23	auxiliary contactor	24 VDC / 4S	3RH1140-1BB40	Siemens
134	200011558	ESJK9304	13	power contactor	4kW / 24 VDC / 1S	3RT1016-1BB41	Siemens
135	200011559	ESJK9305	2	power contactor	5,5kW / 24 VDC	3RT1024-1BB40	Siemens
136	200011560	ESJK9307	3	power contactor	7,5kW / 24 VDC	3RT1025-1BB40	Siemens
137	200011561	ESJK9311	1	power contactor	11kW / 24 VDC	3RT1026-1BB40	Siemens
138	200011562	ESJK9315	1	power contactor	15kW / 24 VDC	3RT1034-1BB40	Siemens
139	200011564	ESJK9322	30	power contactor	22kW / 24 VDC	3RT1036-1BB40	Siemens
140	200011566	ESJK9337	9	power contactor	37kW / 24 VDC	3RT1045-1BB40	Siemens
141	200011609	ESJQ3001	161	power circuit breaker	0,11 - 0,16 A	3RV1021-0AA15	Siemens
142	200011611	ESJQ3003	9	power circuit breaker	0,22 - 0,32 A	3RV1021-0DA15	Siemens
143	200011616	ESJQ3010	1	power circuit breaker	0,70 - 1,00 A	3RV1021-0JA15	Siemens
144	200011621	ESJQ3032	6	power circuit breaker	2,2 - 3,2 A	3RV1021-1DA15	Siemens
145	200011622	ESJQ3040	4	power circuit breaker	2,8 - 4,0 A	3RV1021-1EA15	Siemens
146	200011625	ESJQ3080	161	power circuit breaker	5,5 - 8,0 A	3RV1021-1HA15	Siemens
147	200011626	ESJQ3100	1	power circuit breaker	7,0 - 10,0 A	3RV1021-1JA15	Siemens
148	200011627	ESJQ3125	3	power circuit breaker	9,0 - 12,5 A	3RV1021-1KA15	Siemens
149	200011628	ESJQ3160	3	power circuit breaker	11 - 16 A	3RV1021-4AA15	Siemens
150	200011629	ESJQ3200	4	power circuit breaker	14 - 20 A	3RV1021-4BA15	Siemens
151	200011631	ESJQ3250	1	power circuit breaker	20 - 25 A	3RV1021-4DA15	Siemens
152	200011633	ESJQ3301	28	Power supply	6 - 25 qmm	3RV1915-5A	Siemens

Summarized parts list electrical construction

Artikelsummenstückliste_Elo_SAP_001

	Part number new	Part number old	Quantity	Designation 1	Designation 2	Order number	Manufacturer
153	200011634	ESJQ3302	1	bus voltage	für 2 Schalter	3RV1915-1AB	Siemens
154	200011635	ESJQ3303	2	bus voltage	für 3 Schalter	3RV1915-1BB	Siemens
155	200011636	ESJQ3304	15	bus voltage	für 4 Schalter	3RV1915-1CB	Siemens
156	200011637	ESJQ3305	62	bus voltage	für 5 Schalter	3RV1915-1DB	Siemens
157	200011638	ESJQ3306	10	Connector	Schütz S00 - AC/DC - Leistungsschalter S0	3RA1921-1D	Siemens
158	200011640	ESJQ3308	6	Connector	Schütz S0 - DC - Leistungsschalter S0	3RA1921-1B	Siemens
159	200011644	ESJQ3312	39	auxiliary contact	querliegend	3RV1901-1E	Siemens
160	200011647	ESJQ3315	30	Connector	Schütz S2 - DC - Leistungsschalter S2	3RA1931-1B	Siemens
161	200011657	ESJQ3400	1	power circuit breaker	28 - 40 A	3RV1031-4FA10	Siemens
162	200011658	ESJQ3450	27	power circuit breaker	36 - 45 A	3RV1031-4GA10	Siemens
163	200011659	ESJQ3500	2	power circuit breaker	40 - 50 A	3RV1031-4HA10	Siemens
164	200011661	ESJQ3750	1	power circuit breaker	57 - 75 A	3RV1041-4KA10	Siemens
165	200011662	ESJQ3900	8	power circuit breaker	70 - 90 A	3RV1041-4LA10	Siemens
166	200011692	ESJZ9100	52	RC network	S00 / 24V AC/DC	3RT19 16-1CB00	Siemens
167	200011693	ESJZ9101	7	RC network	S0 / 24V AC/DC	3RT19 26-1CB00	Siemens
168	200011694	ESJZ9103	39	RC network	S2,3 / 24V AC/DC	3RT19 36-1CB00	Siemens
169	200011984	ESTA4009	1	thermostat	24 V AC/DC -80...600 °C	XT121C-1C0TU	Dixell
170	200013204	EWOF1002	6	busbar support	3 pol. 35 - 120 mm² + Abdeckung	01495	Wöhner
171	200013205	EWOF1003	4	Cover		1573	Wöhner
172	200013213	EWOF1014	2	sub-plate	3 pol. max 32x20mm	1753	Wöhner
173	200013232	EWOF1036	2	Cover	Leitungsanschluß 270x200x90 mm	1757	Wöhner
174	200013238	EWOF1080	6	Terminals	für Doppel-T-Profil 320-800 qmm (VE=3 Stück)	Nr. 01185	Wöhner
175	200013239	EWOF1081	9	busbar support	für Doppel-T-Profil 3-polig	Nr. 01231	Wöhner
176	200013240	EWOF1082	4	Cover	für T-Profil 3-polig (VE=4 Stück)	Nr. 01234	Wöhner
177	200013241	EWOF1083	1	Cover	Länge: 1100mm (VE=2 Stück)	Nr. 01025	Wöhner
178	200013242	EWOF1084	1	support	für Leerfeldabdeckung	Nr. 01026	Wöhner
179	200013243	EWOF1085	3	ground vat	geschlitzt 230x1100mm (VE=2 Stück)	Nr. 01009	Wöhner
180	200013249	EWOF1092	3	Busbar	E-CU 30 x 5 mm a 1,90 mtr	1.622.900	Wöhner
181	200028793	EWOF1097	3	Busbar	Doppel-T-Profil 720 qmm a 2,40 mtr	Nr. 01608	Wöhner
182	200028794	EWOF1098	2	Busbar	Doppel-T-Profil 720 qmm a 2,00 mtr	Nr. 01608.900	Wöhner
183	200013269	EWOF1200	20	Busbar connection point	25A / 60mm System 45mm breit (2)	32431	Wöhner
184	200013270	EWOF1201	30	Busbar connection point	63A / 60mm System 54mm breit f. Siemens S2	32455	Wöhner
185	200013271	EWOF1202	9	Busbar connection point	100A / 60mm System 70mm breit	32226	Wöhner
186	200013273	EWOF1210	1	Busbar connection point	32A / 60mm System 45mm / ohne Leitung	32486	Wöhner
187	200013281	EWOF1400	1	load-break switch	NH-Gr. 2 / 400A	33602	Wöhner
188		PILZ.787 750	1				

Summarized parts list mechanical construction

Artikelsummenstückliste_Mech_SAP_001

	Part number new	Part number old	Quantity	Designation 1	Designation 2	Order number	Manufacturer
1	200001240	AED00273	8	Three-phase motor	Niederspannungsmotor	1LA9207-2WA11-ZA11+G50+Y55	Siemens
2	200001426	AEFL0075	2	Three-phase motor	Flachgetriebemotor	SK9382AXG-132M/4TF F IG22K	Getriebebau Nord
3	200001586	AEKE0185	1	Three-phase motor	Kegelstirnradgetriebemotor	SK9032.1AZD-132S/4 TF	Getriebebau Nord
4	200001587	AEKE0186	1	Three-phase motor	Kegelradgetriebemotor	SK9042.1AZD-160L/4 BRE250	Getriebebau Nord
5	200001588	AEKE0187	1	Three-phase motor	Kegelradgetriebemotor	SK9012.1AZD-100LA/4 TF	Getriebebau Nord
6	200001594	AEKE0193	1	Three-phase motor	Kegelstirnradgetriebemotor	SK9032.1AZD-132S/4 TF	Getriebebau Nord
7	200001606	AEKE0205	1	Three-phase motor	Kegelstirnradgetriebemotor	SK9042.1AZD-100LA/4 TF F	Getriebebau Nord
8	200001607	AEKE0206	156	Three-phase motor	Kegelstirnradgetriebemotor	SK9032.1AZD-90S/4 TF F	Getriebebau Nord
9	200001608	AEKE0207	1	Three-phase motor	Kegelstirnradgetriebemotor	SK9042.1AX-90L/4 BRE20 TF	Getriebebau Nord
10	200001853	AESC0292	2	Three-phase motor	Schneckengetriebemotor	SK12063AZ-90L/4	Getriebebau Nord
11	200002005	AESC0438	1	Three-phase motor	Schneckengetriebemotor	SK32100AZ D-112M/4	Getriebebau Nord
12	200002076	AESC0509	1	Three-phase motor	Schneckengetriebemotor	SK1Si63D-IEC90-90S/4	Getriebebau Nord
13	200002107	AESC0545	1	Three-phase motor	Schneckengetriebemotor	SK1SIS63D-IEC9090S/4	Getriebebau Nord
14	200002266	AEST0267	1	Three-phase motor	Stirnradgetriebemotor	SK872-160M/4 TF	Getriebebau Nord
15	200002267	AEST0268	2	Three-phase motor	Stirnradgetriebemotor	SK52F-90S/4 TF F	Getriebebau Nord
16	200004790	EBFS9641	9	Sensor inductive	24 VDC,sn=8mm, Schließer	BESM18MI-PSC80B-S04K	Balluff
17	200004798	EBFS9664	2	Sensor capacitive	10-30 VDC (Ö/S)	BCS-M30-KM7-PPH15G-S04U	Balluff
18	200005697	EDKS0001K	1	cable operated Emergency stop		LHEPw-10/2-BSR	Dittelbach&Kerzler
19	200005698	EDKS0002K	1	cable operated Emergency stop		LHEPw-10/2-BSL	Dittelbach&Kerzler
20	200006181	EFEA9001	14	solenoid	MSFG-24/42-50/60-OD	Nr.: 34411	FESTO
21	200006186	EFES0012	1	pressure switch	PEV-1/4-B	10773	FESTO
22	200006788	EIFA0041	2	mounting accessories	Winkel für Drehgeber RV, RMV	Nr. E 60035	IFM
23	200006790	EIFA0043	2	Coupling	beidseitig d=10mm	Nr. E 60118	IFM
24	200006850	EIFA9007	2	encoder	Vollwelle 10mm	RV6001	IFM
25	200007009	EJNR0001	1	temperature sensor	PT 100	00118872	Jünemann
26	200007814	ELAW1030	162	Cable	3 x 1.0 mm2	1119 203	Lapp
27	200007816	ELAW1031	6	Cable	3 x 1.5 mm2	1119 303	Lapp
28	200007819	ELAW1040	161	Cable	4 x 1.0 mm2	1119 204	Lapp
29	200007820	ELAW1041	38	Cable	4 x 1.5 mm2	1119 304	Lapp
30	200007822	ELAW1042	6	Cable	4 x 2.5 mm2	1119 404	Lapp
31	200007823	ELAW1043	2	Cable	4 x 35 mm2	1119 644	Lapp
32	200007824	ELAW1044	2	Cable	4 x 4 mm2	1119 504	Lapp
33	200007827	ELAW1047	2	Cable	4 x 10 mm2	1119 614	Lapp
34	200007830	ELAW1050	8	Cable	5 x 1.0 mm2	1119 205	Lapp
35	200007843	ELAW1071	8	----------	7 x 1.5 mm2 max. Länge 500m	1119 307	Lapp
36	200007850	ELAW1120	2	Cable	12 x 1.0 mm2	1119 212	Lapp
37	200007855	ELAW1180	1	----------	18 x 1.0 mm2	1119 218	Lapp
38	200007890	ELAW2220	166	Cable	4x2x0,34 mm2	0031327	Lapp

Summarized parts list mechanical construction

Artikelsummenstückliste_Mech_SAP_001

	Part number new	Part number old	Quantity	Designation 1	Designation 2	Order number	Manufacturer
39	200007952	ELAW6041	159	Cable	4 x 1,5 mm²	0036 390	Lapp
40	200007953	ELAW6042	2	Cable	4 x 2,5 mm2	0036 391	Lapp
41	200007954	ELAW6043	16	Cable	4 x 35 mm²	0036 397	Lapp
42	200007977	ELAW6433	2	Cable	3 x 0,75 mm2	0035 710	Lapp
43	200008200	ELZS0003	1	measurement parts Height Control	Quattro-DP	670002	Leuze
44	200008201	ELZS0004	2	measurement parts Height Cable	CB-M12-20000S-5GF/GM	678032	Leuze
45	200008202	ELZS0005	1	measurement parts Height transmitter	Konturflex KT10-640	673064	Leuze
46	200008203	ELZS0006	1	measurement parts Height receiver	Konturflex KR10-640	672064	Leuze
47	200008209	ELZS1001	12	Light barrier	Sender	50107888	Leuze
48	200008210	ELZS1002	12	Light barrier	Empfänger	50107888-01	Leuze
49	200028836	ELZS9602	5	light sensor	HRT 46B/44-S12	50106546	Leuze
50	200008645	EOPA9001	3	temperature sensor	Pyrometer 85°C	3874360	Optron
51	200008646	EOPA9002	3	temperature sensor	Pyrometer 180°C	3874550	Optron
52	200009543	ERIA8026	1	base side section	200 x 600	TS 8602.060	Rittal
53	200009607	ERIA8106L	1	side panel	2000 x 600 mm	TS 8106.235	Rittal
54	200009624	ERIA8206L	1	Enclosure	1200 x 2000 x 600	TS 8206.500	Rittal
55	200009626	ERIA8220	1	base ahead behind	1200 x 200	TS 8602.200	Rittal
56	200011002	ESIS0493	3	position switch	3 SE 5112-0CH50	3 SE 5112-0CH50	Siemens
57	200011140	ESIS9607	3	ultrasonic sensor	M12 / 1S / 3 Leiter 15-34 VDC	3RG6343-3AB00	Siemens
58	200011176	ESIS9645	17	Proximity switch inductive	BERO kubisch 60x80mm (Ö/S , pnp)	3RG4142-6AD00	Siemens
59	200012483	ETES0417	11	Operating element	auslenkbar	XCS-Z 03	Schneider
60	200012494	ETES0450	8	safety limit switch	2Ö/1S	XCS-A701	Schneider
61	200012562	ETES4450	3	safety limit switch	24 V/UC - stromlos verriegelt	XCS-E7311	Schneider
62	200015255	FILT0794	1	Three-phase motor	Zellenradschleuse	399012.095	Dantherm
63	200015415	FILT1034	1	Solenoid valve Control	24 Ausgänge	HE 5722	Hesch
64	200016347	GEB00274	2	Three-phase motor	Radialventilator	GCH 005040	Cimme
65	200016443	GEB00384	1	Three-phase motor	Radialventilator	Q2M-M2B4M-WAB-RD	Gebhardt
66	200016459	GEB00400	1	Three-phase motor	Radialventilator	GBJ L06360	Cimme
67	200018099	HSG00059	8	AC motor	Hubspindelantrieb	0 W/0 1000-4-85	Framo
68	200018485	HYAG0184	1	Three-phase motor	Hydraulikaggregat	HPE-16/85-DU/VK6-3	Kottmann