Original Instructions

TOOLING MANUAL

MACHINING CENTERS

Manual No.: HGMCTA0014E

Serial No.:

Copyright (C) 2021 YAMAZAKI MAZAK CORPORATION. All rights reserved.
Serial No. 368959

Before using this machine and equipment, fully understand the contents of this manual to ensure proper operation. Should any questions arise, please ask the nearest Technical Center or Technology Center.

IMPORTANT NOTICE

1. **Be sure to observe the safety precautions described in this manual and the contents of the safety plates on the machine and equipment. Failure may cause serious personal injury or material damage. Please replace any missing safety plates as soon as possible.**
2. **No modifications are to be performed that will affect operation safety.**
3. **For the purpose of explaining the operation of the machine and equipment, some illustrations may not include safety features such as covers, doors, etc. Before operation, make sure all such items are in place.**
4. **This manual was considered complete and accurate at the time of publication, however, due to our desire to constantly improve the quality and specification of all our products, it is subject to change or modification. If you have any questions, please contact the nearest Technical Center or Technology Center.**
5. **Always keep this manual near the machinery for immediate use.**
6. **If a new manual is required, please order from the nearest Technical Center or Technology Center with the manual No. or the machine name, serial No. and manual name.**
7. **The export of machining programs may be restricted to prevent them from being used for military purposes. The machining programs you prepared are your property, so you should manage them yourself in accordance with the law.**

Issued by Manual Publication Section, YAMAZAKI MAZAK CORPORATION, Japan

07.2020

Copyright (C) 2017 YAMAZAKI MAZAK CORPORATION. All Rights Reserved.

Copyright (c) 2013 YAMAZAKI MAZAK CORPORATION. All rights reserved.
Serial No. 368959

CONTENTS

1 TOOLING TABLE 1-1

2 SHANK NUMBER 40 2-1

2-1 Tool Shank MAS BT40 2-1

2-2 Pull Stud MAS BT40 ANSI Type (34931900680) 2-2

2-3 Tool Shank CAT40 [Metric System] 2-3

2-4 Pull Stud CAT40 ANSI Type (34931900660) [Metric System] 2-4

2-5 Tool Shank CAT40 [Inch System] 2-5

2-6 Pull Stud CAT40 ANSI Type (34931900670) [Inch System] 2-6

3 SHANK NUMBER 50 3-1

3-1 Tool Shank MAS BT50 3-1

3-2 Pull Stud MAS BT50 ANSI Type (32551901720) 3-2

3-3 Tool Shank CAT50 [Metric System] 3-3

3-4 Pull Stud CAT50 ANSI Type (32551901740) [Metric System] 3-4

3-5 Tool Shank CAT50 [Inch System] 3-5

3-6 Pull Stud CAT50 ANSI Type (32551901730) [Inch System] 3-6

Copyright (c) 2013 YAMAZAKI MAZAK CORPORATION. All rights reserved.
Serial No. 368959

Copyright (c) 2013 YAMAZAKI MAZAK CORPORATION. All rights reserved.
Serial No. 368959

SAFETY PRECAUTIONS

This manual is prepared only for the function or the device which is specified in the title of this manual. Therefore, you are required to carefully read and understand the operating manual of the machine, especially the section describing safety precautions, before using or operating the function or the device.

1 TOOLING TABLE

No.	Tool shank	Pull stud
#40	MAS BT40	MAS BT40 ANSI type Part No. 34931900680
	CAT40 (Inch system)	CAT40 ANSI type (Inch system) Part No. 349319000670
	CAT40 (Metric system)	CAT40 ANSI type (Metric system) Part No. 34931900660
#50	MAS BT50	MAS BT50 ANSI type Part No. 32551901720
	CAT50 (Inch system)	CAT50 ANSI type (Inch system) Part No. 32551901730
	CAT50 (Metric system)	CAT50 ANSI type (Metric system) Part No. 32551901740

Copyright (c) 2013 YAMAZAKI MAZAK CORPORATION All rights reserved.
Serial No. 368959

Copyright (c) 2013 YAMAZAKI MAZAK CORPORATION. All rights reserved.
Serial No. 368959

2 SHANK NUMBER 40

2-1 Tool Shank MAS BT40

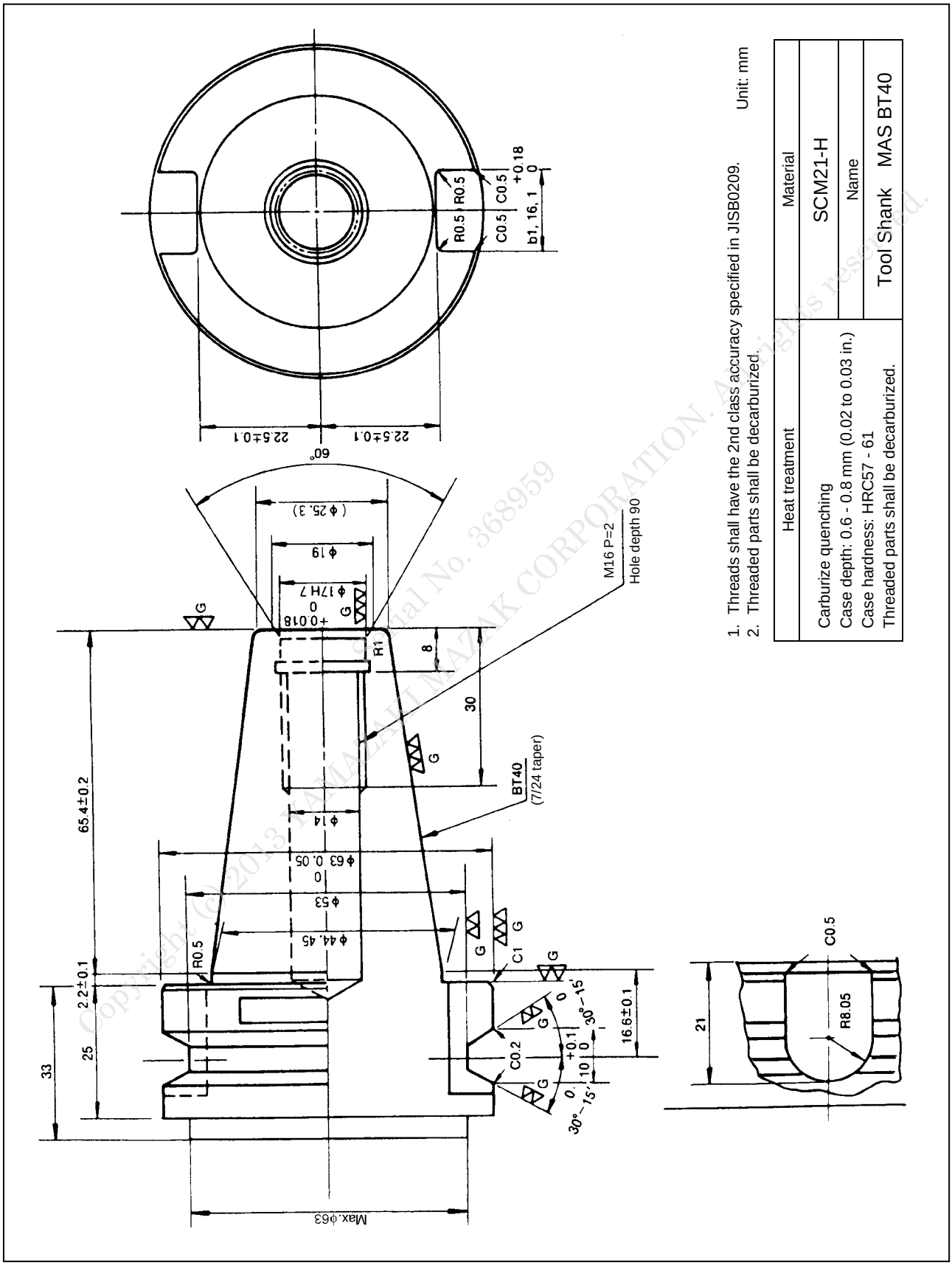

Copyright © 2013 YAMAZAKI MAZAK CORPORATION. All rights reserved.
Original No. 368959

2-2 Pull Stud MAS BT40 ANSI Type (34931900680)

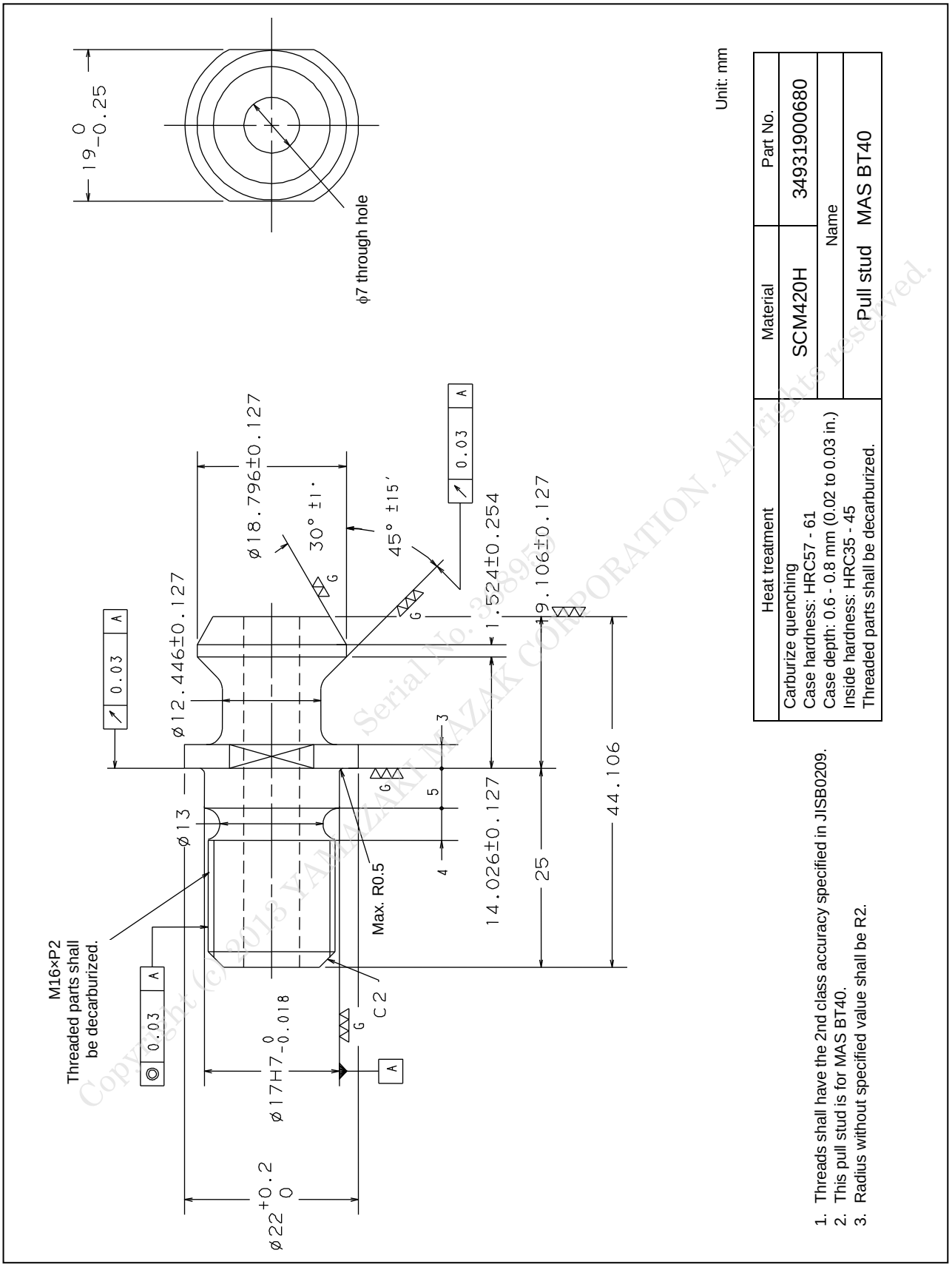

Copyright (c) 2013 YAMAZAKI MAZAK CORPORATION. All rights reserved.
Serial No. 368959

2-3 Tool Shank CAT40 [Metric System]

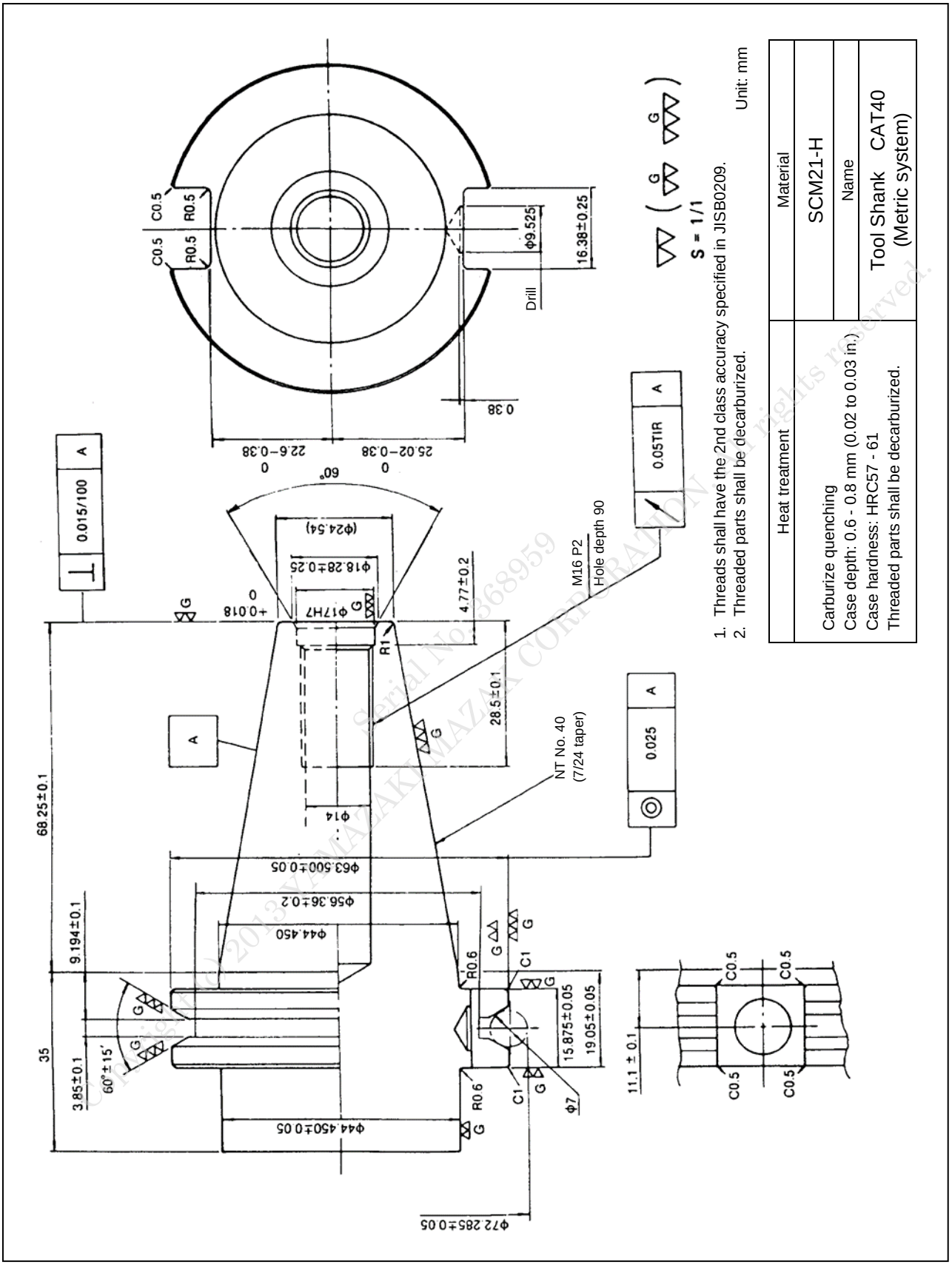

Copyright © 2013 YAMAZAKI MAZAK CORPORATION
Serial No. 368959
All rights reserved.

2-4 Pull Stud CAT40 ANSI Type (34931900660) [Metric System]

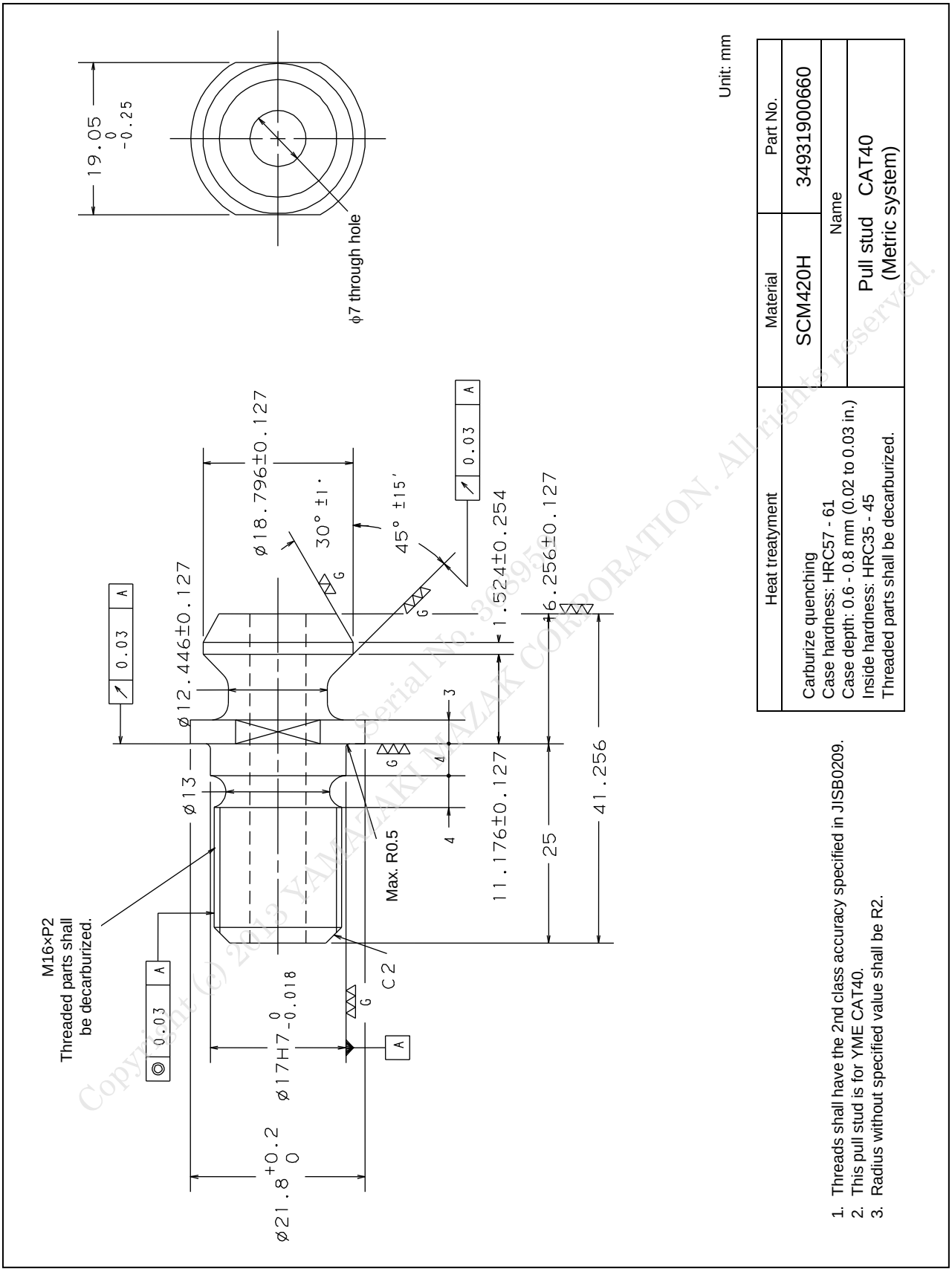

Copyright (c) 2013 YAMAZAKI MAZAK CORPORATION. All rights reserved.
Serial No. 368959

2-5 Tool Shank CAT40 [Inch System]

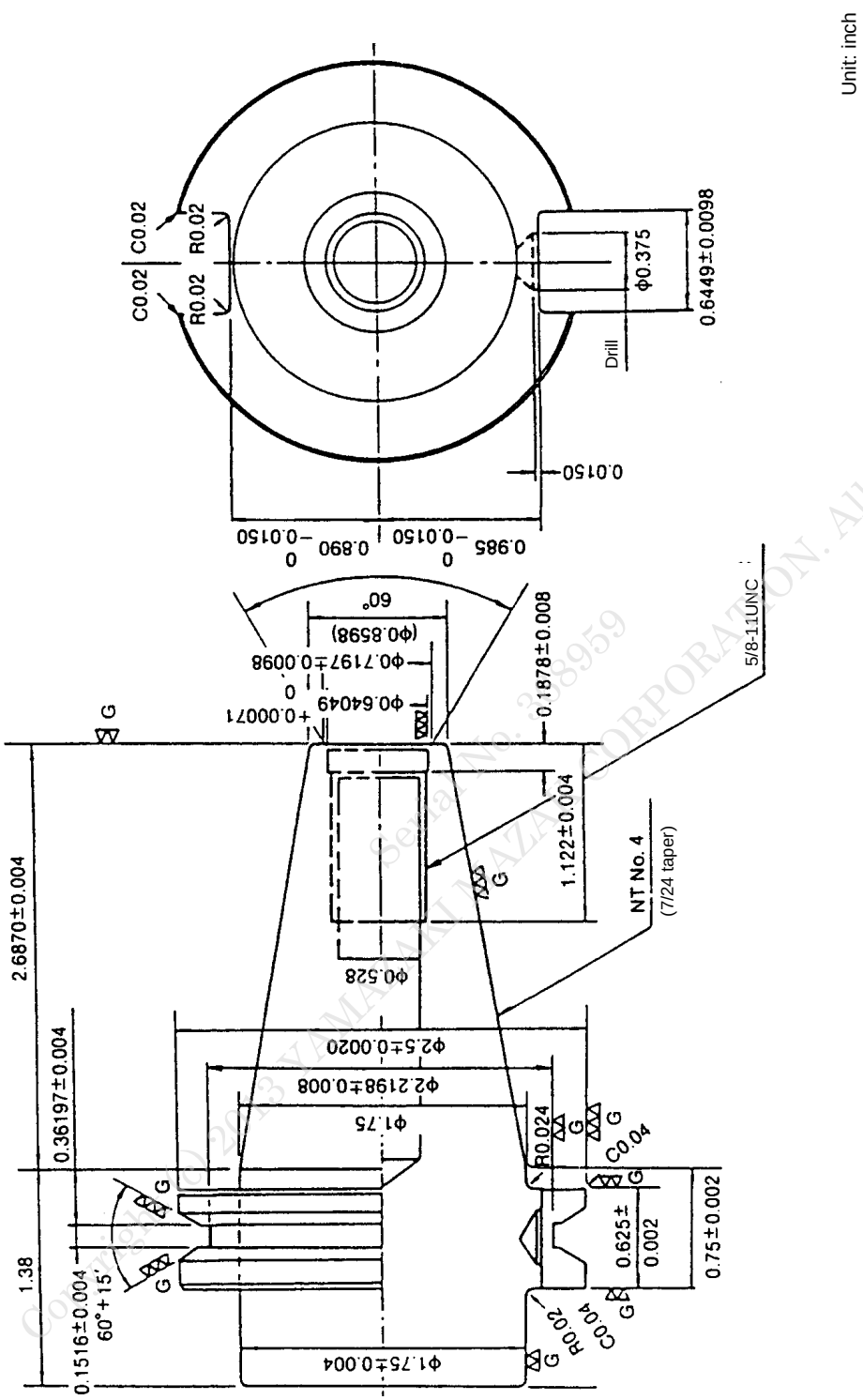

Unit: inch

Material	
SCM21-H	
Name	
Tool Shank CAT40 (Inch system)	

Heat treatment
Carburize quenching Case depth: 0.6 - 0.8 mm (0.02 to 0.03 in.) Case hardness: HRC57 - 61 Threaded parts shall be decarburized.

1. Threads shall have the 2nd class accuracy specified in JISB0209.
2. Threaded parts shall be decarburized.

Copyright © 2013 YAMAZAKI MAZAK CORPORATION. All rights reserved.
Serial No. 368959

2-6 Pull Stud CAT40 ANSI Type (34931900670) [Inch System]

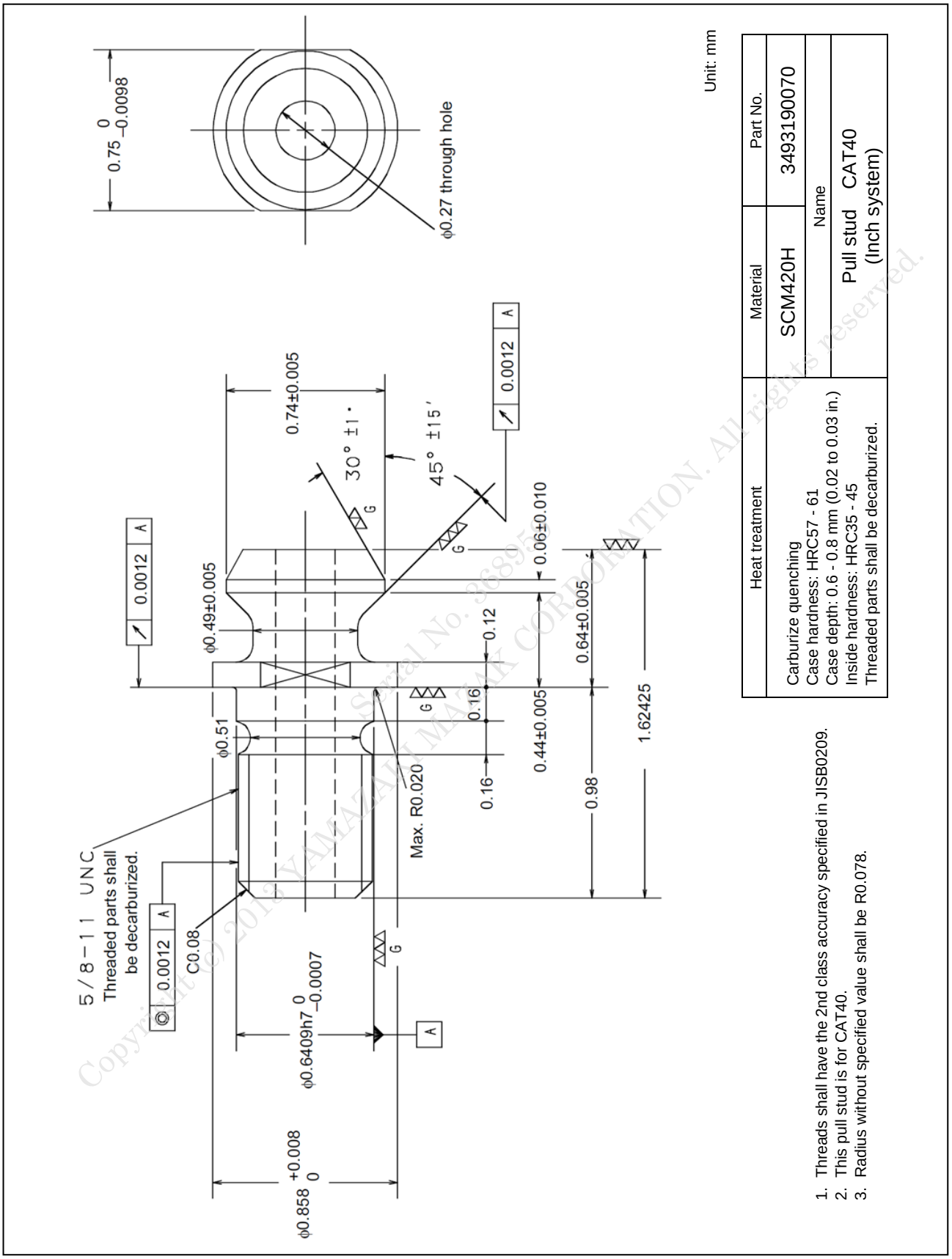

Copyright © 2013 YAMAZAKI MAZAK CORPORATION. All rights reserved.
Serial No. 368959

3 SHANK NUMBER 50

3-1 Tool Shank MAS BT50

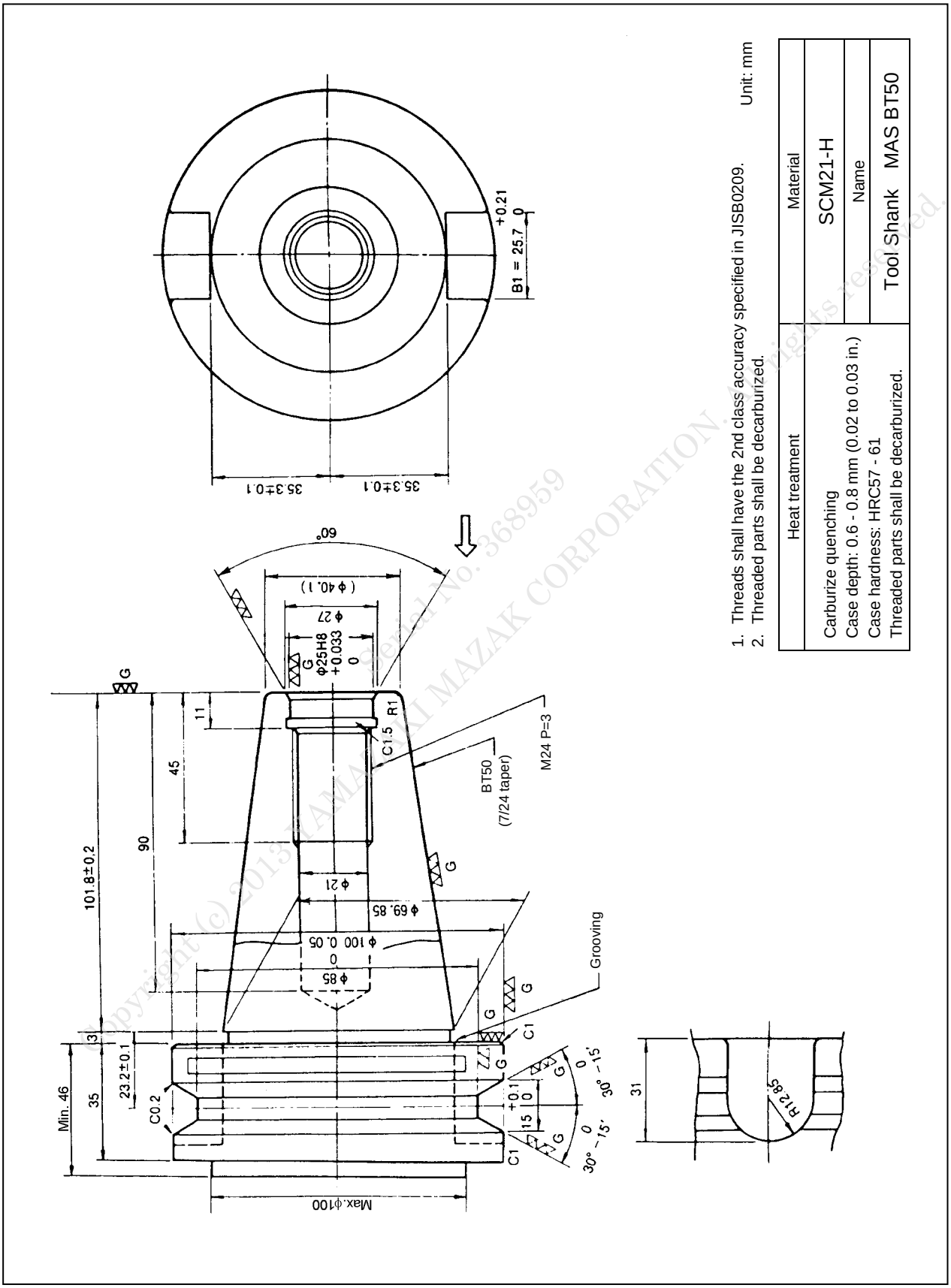

Copyright (c) 2013 YAMAZAKI MAZAK CORPORATION. All rights reserved.
Serial No. 368959

3-2 Pull Stud MAS BT50 ANSI Type (32551901720)

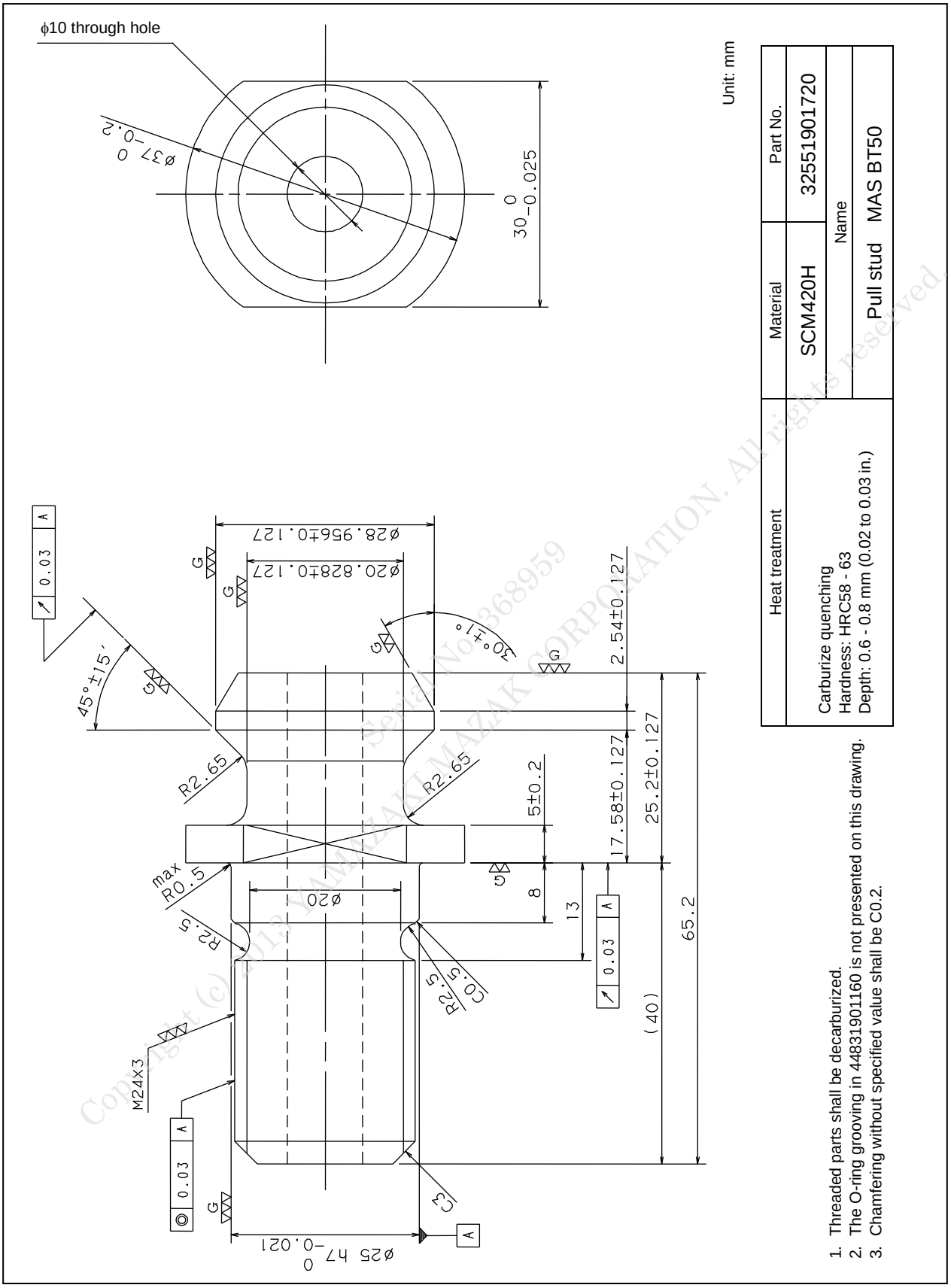

Copyright (c) 2013 YAMAZAKI MAZAK CORPORATION. All rights reserved.
Serial No. 368959

3-3 Tool Shank CAT50 [Metric System]

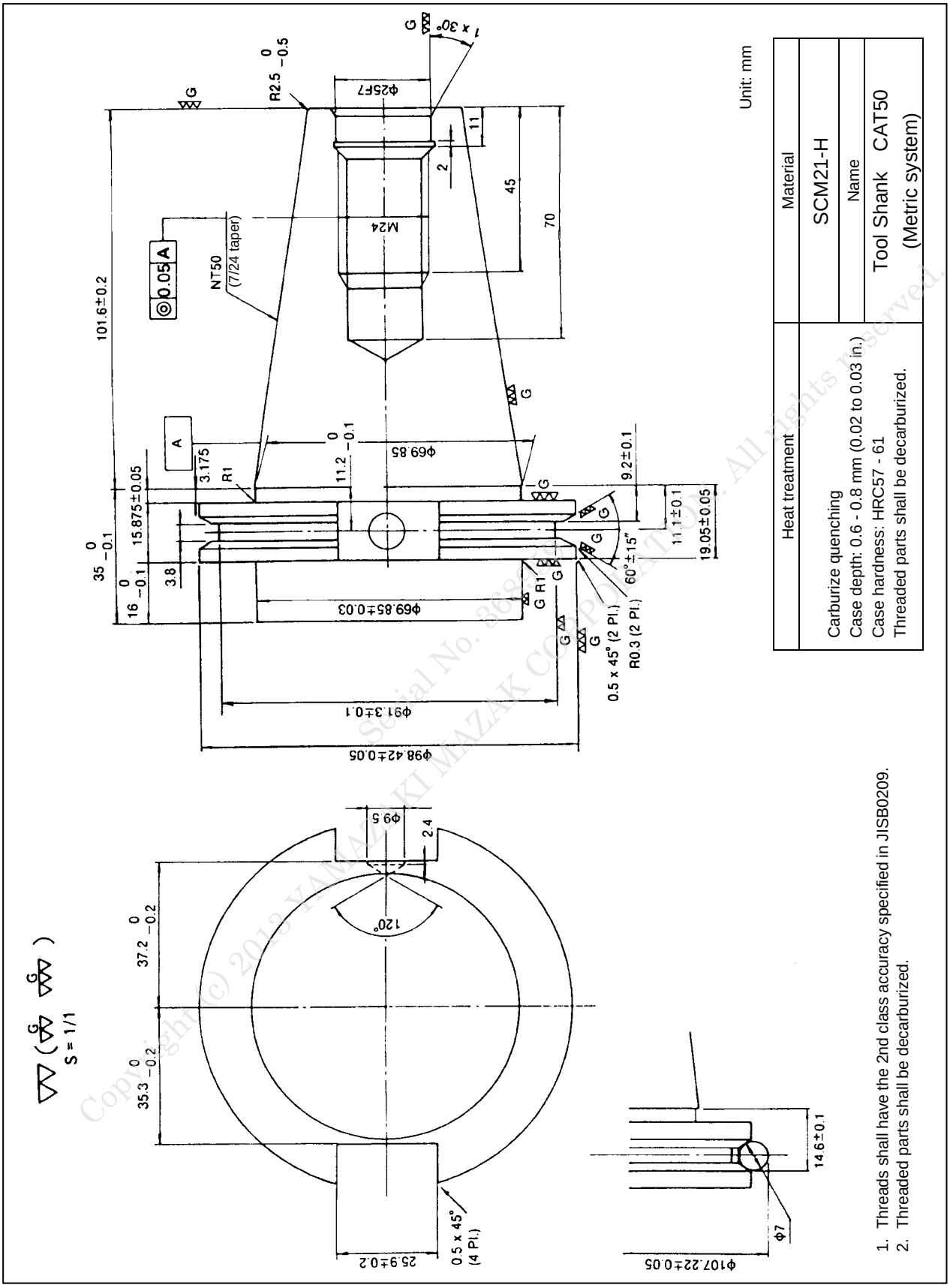

Copyright (c) 2013 YAMAZAKI MAZAK CORPORATION. All rights reserved.
Serial No. 368959

3-4 Pull Stud CAT50 ANSI Type (32551901740) [Metric System]

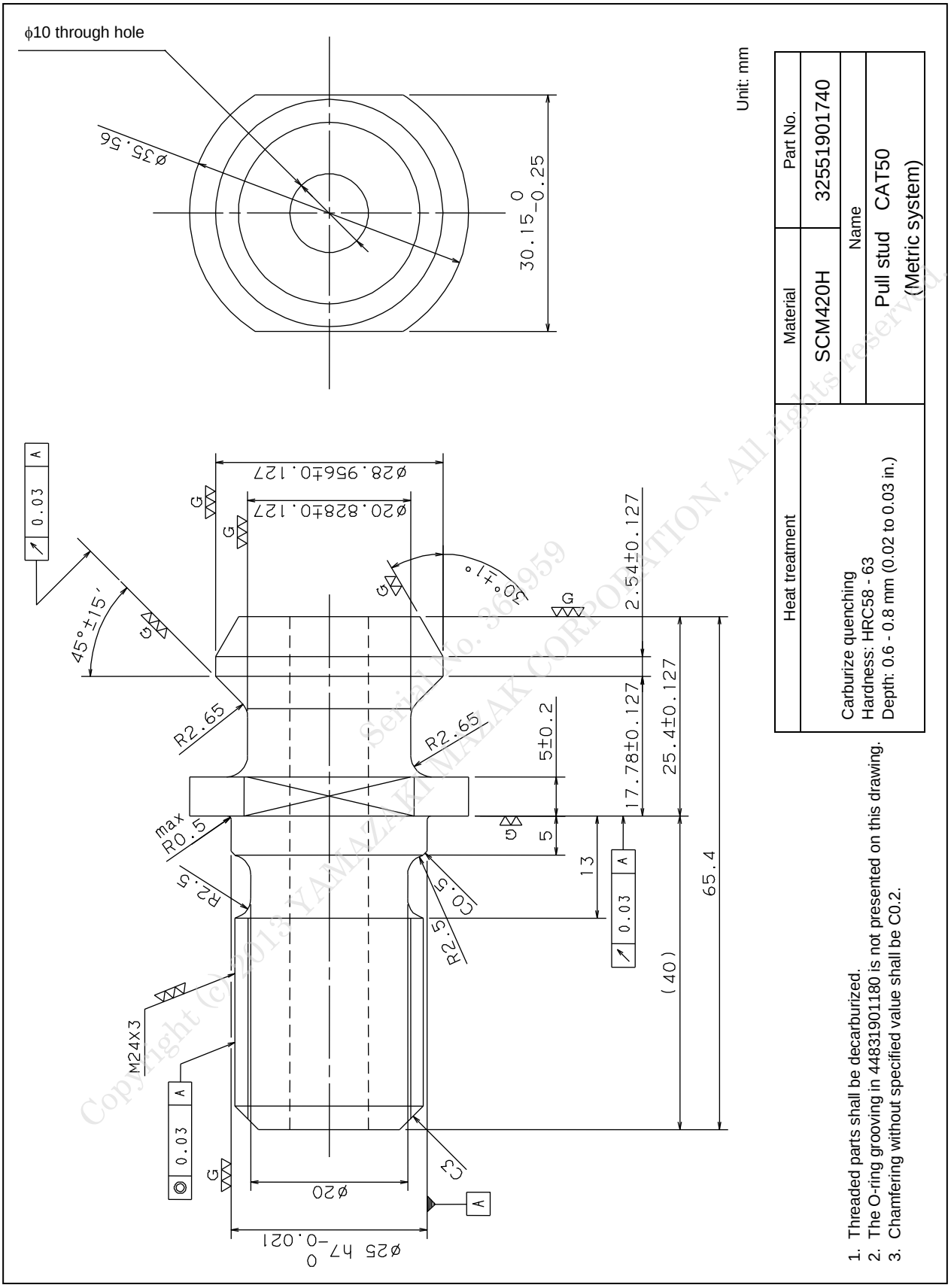

Copyright (C) 2013 YAMAZAKI MAZAK CORPORATION. All rights reserved.
Serial No. 368959

3-5 Tool Shank CAT50 [Inch System]

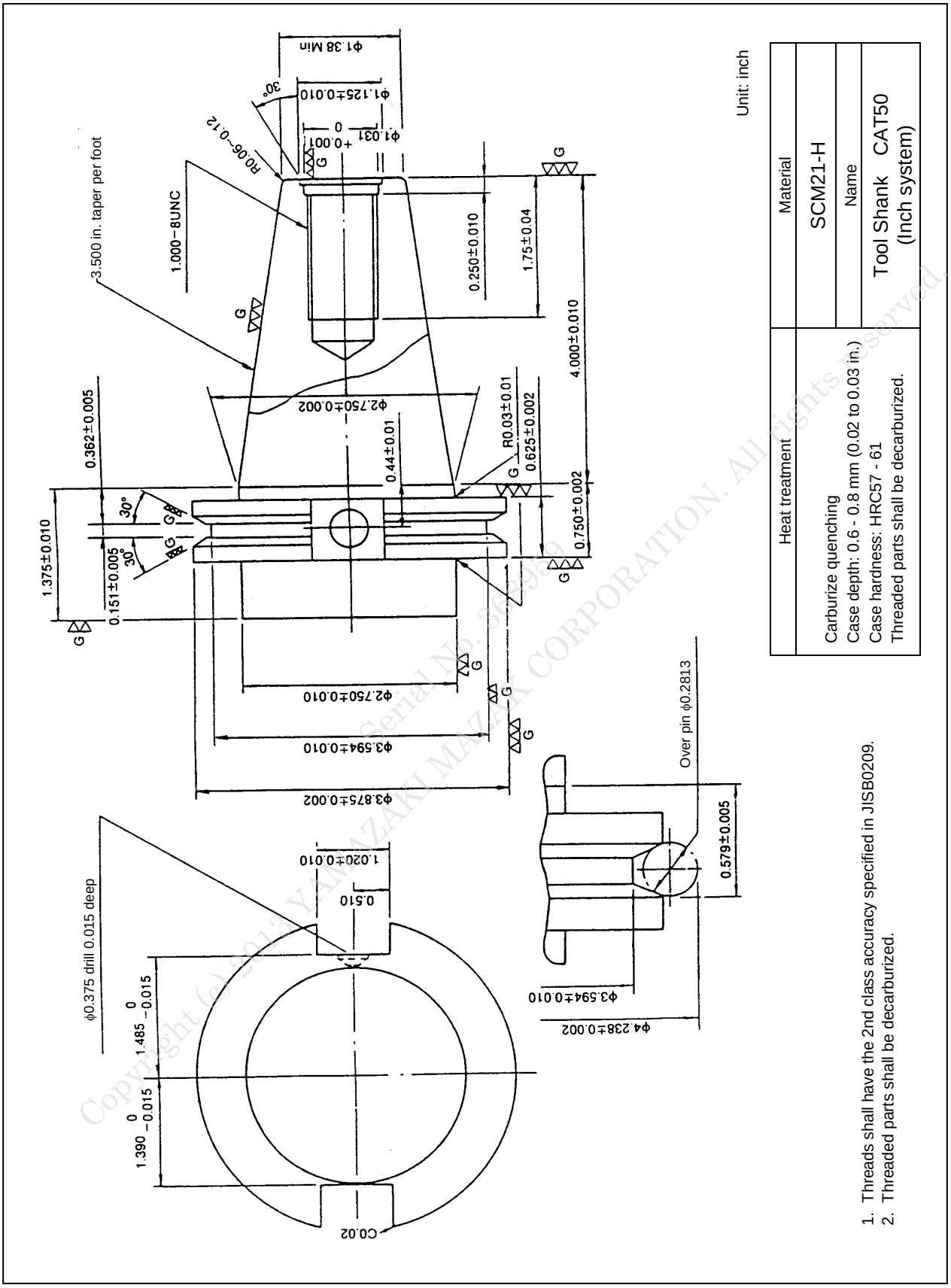

Copyright (c) 2012 YAMAZAKI MAZAK CORPORATION. All rights reserved.
Serial No. 368959

3-6 Pull Stud CAT50 ANSI Type (32551901730) [Inch System]

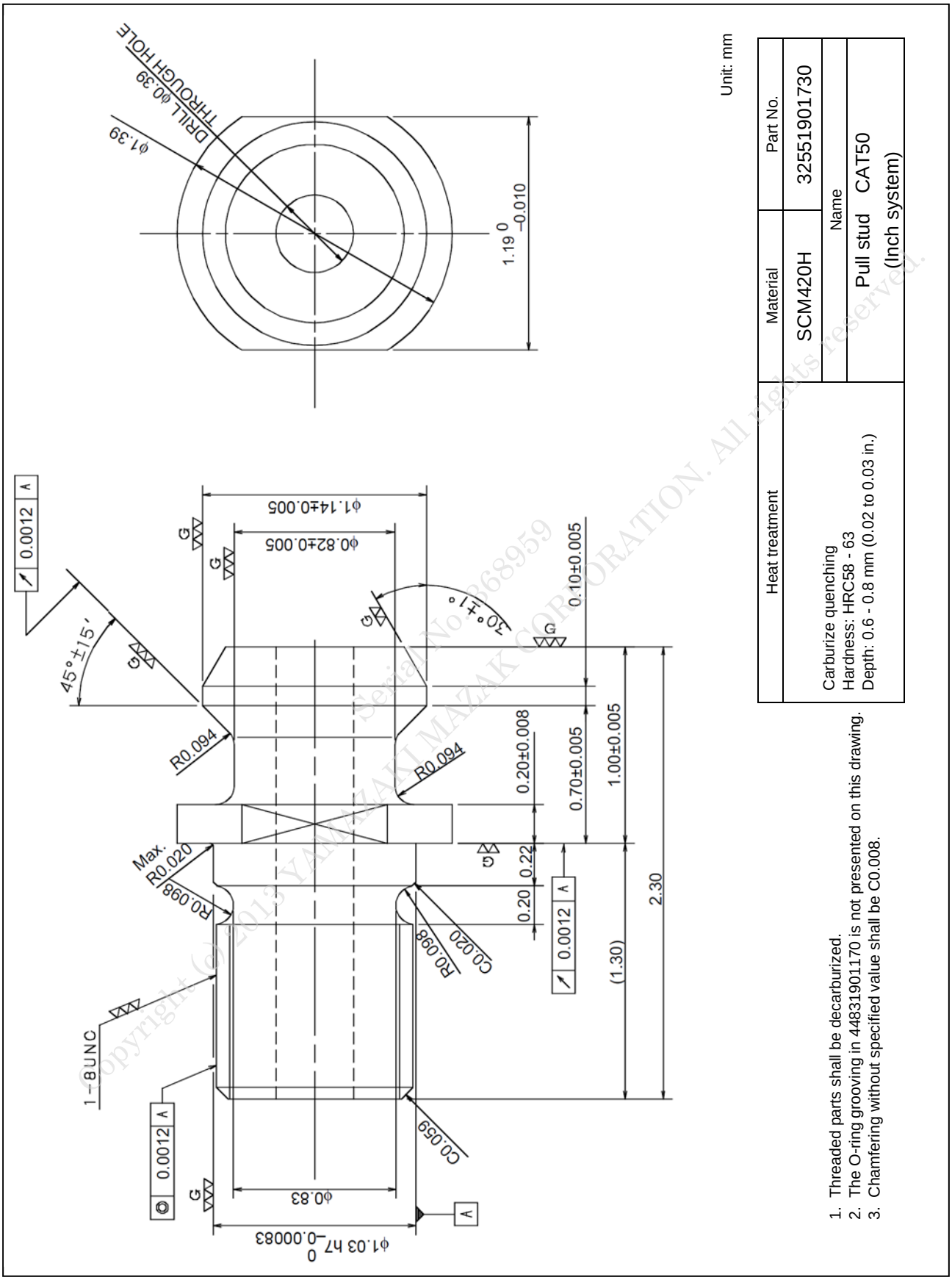

Copyright (c) 2013 YAMAZAKI MAZAK CORPORATION. All rights reserved.
Serial No. 368959