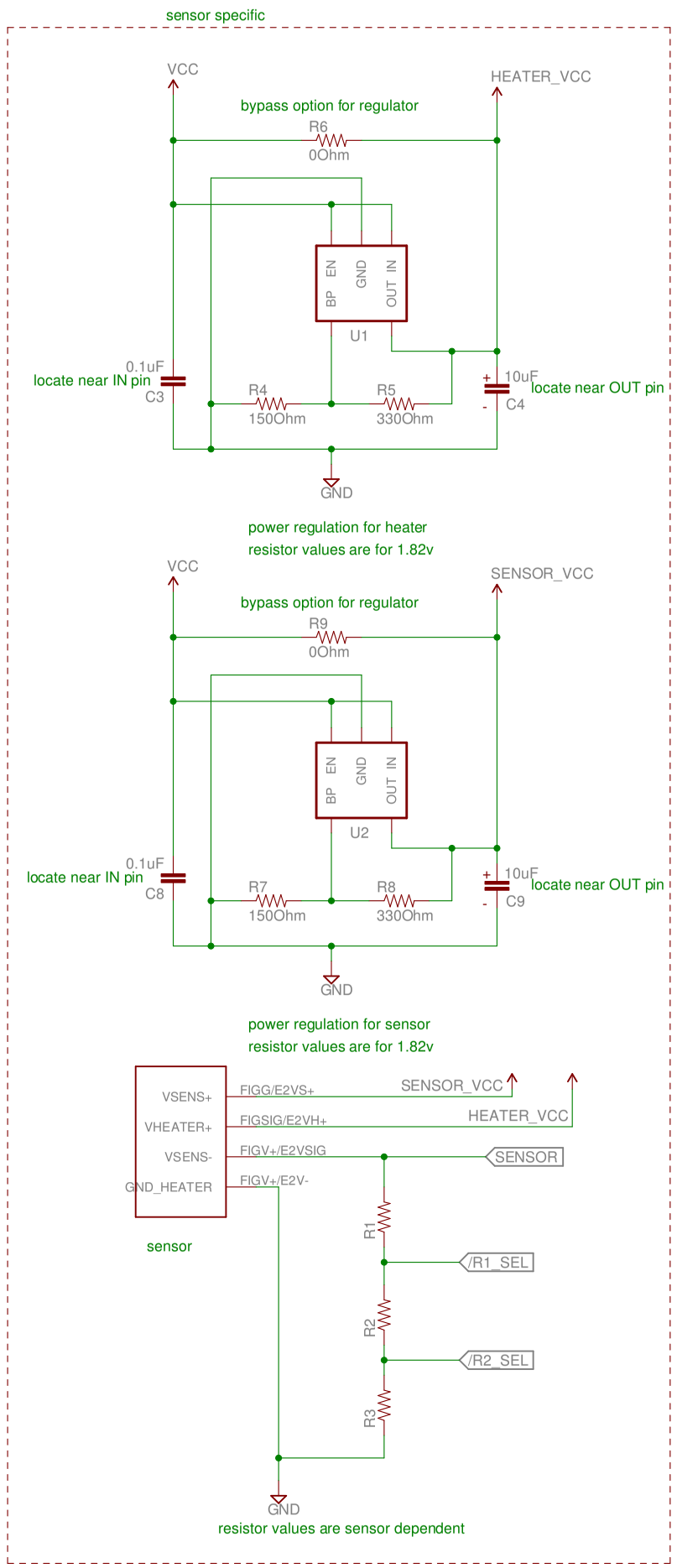

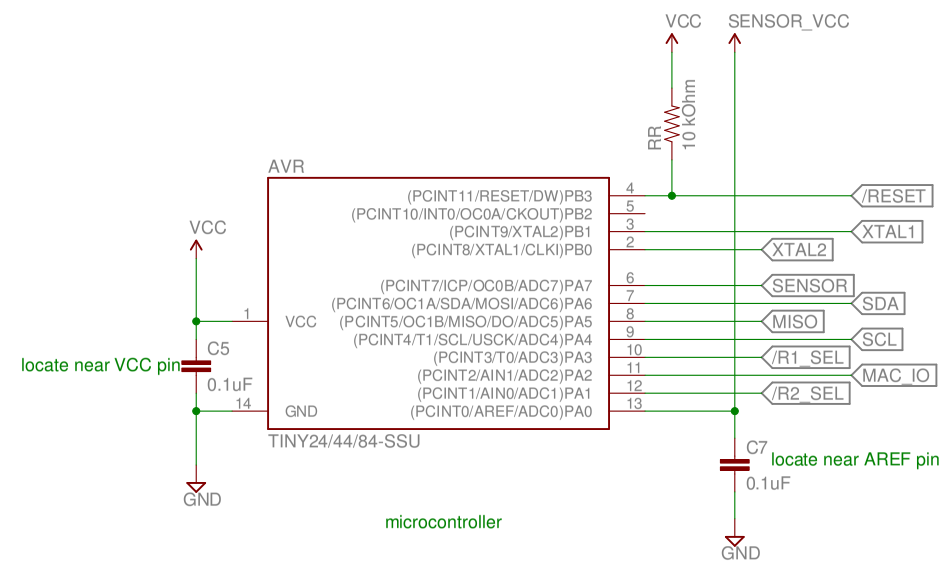

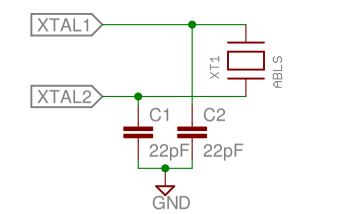

population option for external crystal

standoffs

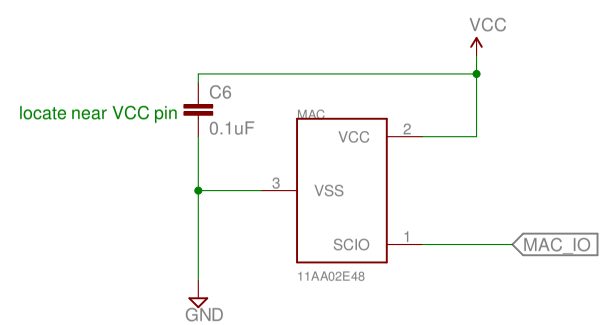

MAC/EEPROM Chip (for ID and possibly Calibration Data)

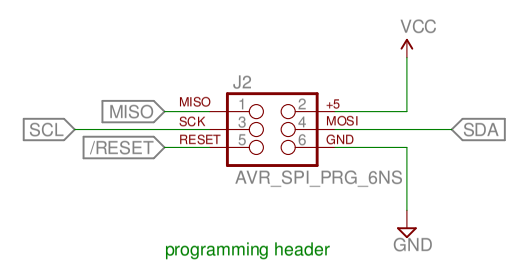

programming header

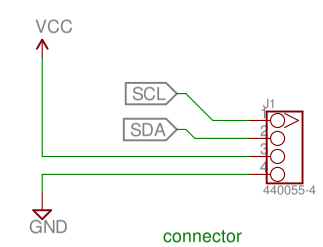

connector

TITLE: AQE_e2v_CMOS	
Document Number:	REV:
Date: 5/16/12 5:37 PM	Sheet: 1/1