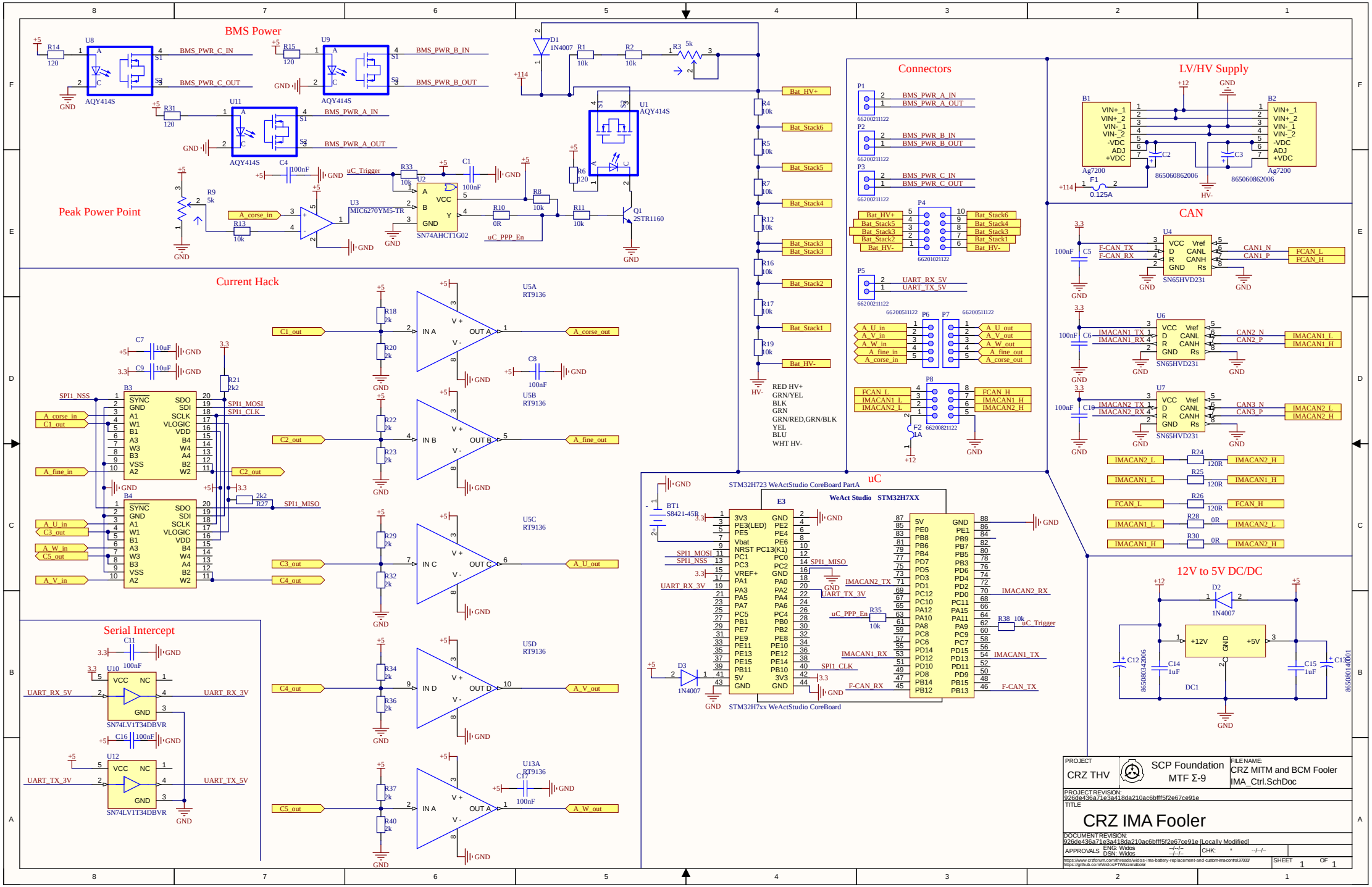
BMS Power
Peak Power Point
Current Hack
Serial Intercept
Connectors
LV/HV Supply
CAN
uC
12V to 5V DC/DC
STM32H723 WeActStudio CoreBoard PartA
STM32H7xx WeActStudio CoreBoard
WeAct Studio STM32H7XX
PROJECT
CRZ THV
SCP Foundation
MTF Σ-9
FILE NAME:
CRZ MITM and BCM Fooler
IMA_Ctrl.SchDoc
PROJECT REVISION:
926de436a71e3a418da210ac6bff5f2e67ce91e
TITLE
CRZ IMA Fooler
DOCUMENT REVISION:
926de436a71e3a418da210ac6bff5f2e67ce91e [Locally Modified]
APPROVALS
ENG: Widos
DSN: Widos
CHK:
SHEET 1 OF 1