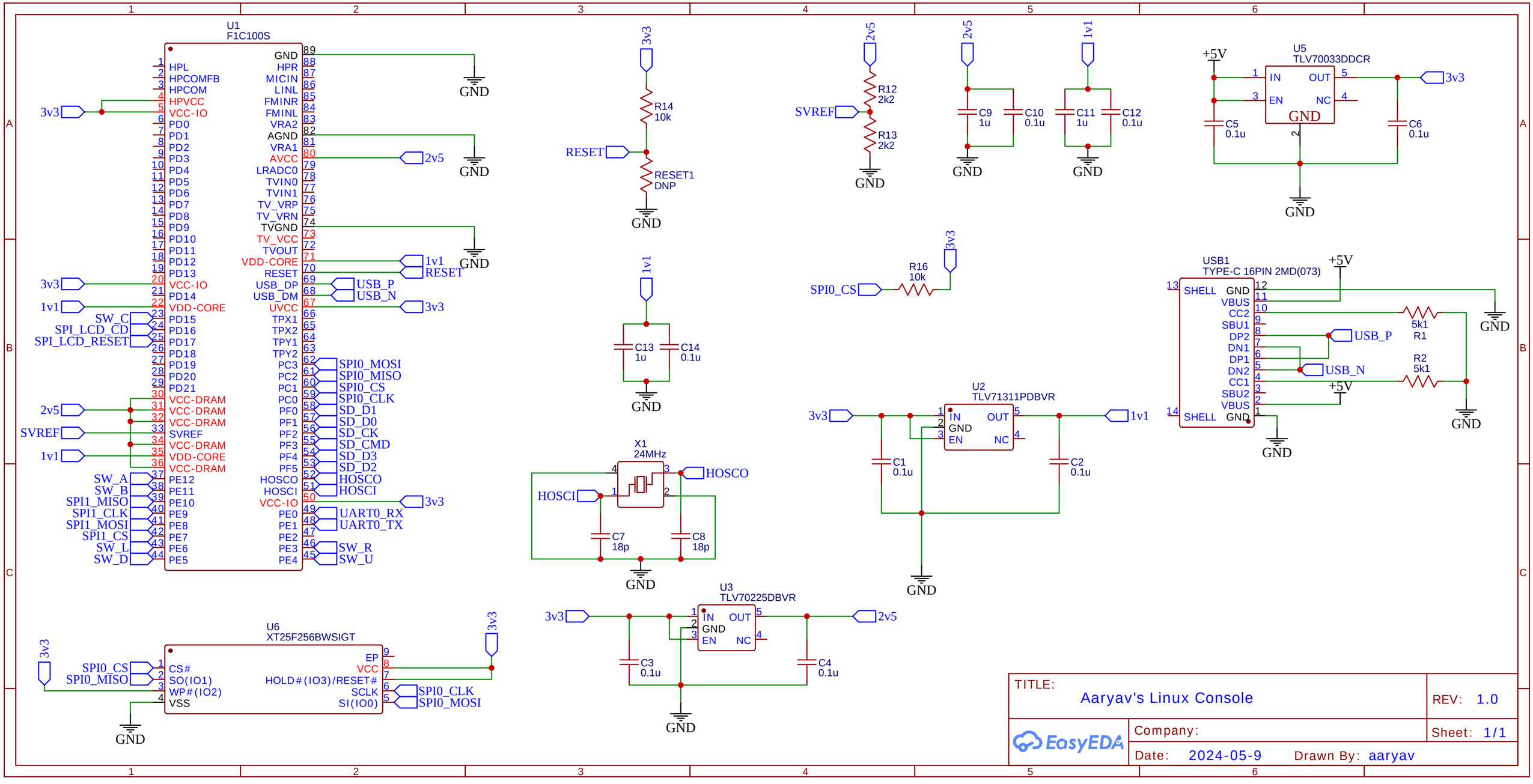
U1
F1C100S
HPL
HPCOMFB
HPCOM
HPVCC
VCC-IO
PD0
PD1
PD2
PD3
PD4
PD5
PD6
PD7
PD8
PD9
PD10
PD11
PD12
PD13
PD14
VDD-CORE
PD15
PD16
PD17
PD18
PD19
PD20
PD21
VCC-DRAM
VCC-DRAM
VCC-DRAM
SVREF
VCC-DRAM
VDD-CORE
VCC-DRAM
PE12
PE11
PE10
PE9
PE8
PE7
PE6
PE5
GND
HPR
MICIN
LINL
FMINR
FMINL
VRA2
AGND
VRA1
AVCC
LRADC0
TVIN0
TVIN1
TV_VRP
TV_VRN
TVGND
TV_VCC
TVOUT
VDD-CORE
RESET
USB_DP
USB_DM
UVCC
TPX1
TPX2
TPY1
TPY2
PC3
PC2
PC1
PC0
PF0
PF1
PF2
PF3
PF4
PF5
HOSCO
HOSCI
VCC-IO
PE0
PE1
PE2
PE3
PE4
3v3
1v1
SW_C
SPI_LCD_CD
SPI_LCD_RESET
2v5
SVREF
1v1
SW_A
SW_B
SPI1_MISO
SPI1_CLK
SPI1_MOSI
SPI1_CS
SW_L
SW_D
GND
2v5
GND
GND
1v1
RESET
USB_P
USB_N
3v3
SPI0_MOSI
SPI0_MISO
SPI0_CS
SPI0_CLK
SD_D1
SD_D0
SD_CK
SD_CMD
SD_D3
SD_D2
HOSCO
HOSCI
3v3
UART0_RX
UART0_TX
SW_R
SW_U
U6
XT25F256BWSIGT
CS#
SO(IO1)
WP#(IO2)
VSS
EP
VCC
HOLD#(IO3)/RESET#
SCLK
SI(IO0)
SPI0_CS
SPI0_MISO
SPI0_CLK
SPI0_MOSI
3v3
GND
3v3
R14
10k
RESET
RESET1
DNP
GND
1v1
C13
1u
C14
0.1u
GND
X1
24MHz
HOSCO
HOSCI
C7
18p
C8
18p
GND
U3
TLV70225DBVR
IN
GND
EN
OUT
NC
3v3
2v5
C3
0.1u
C4
0.1u
GND
2v5
R12
2k2
SVREF
R13
2k2
GND
2v5
C9
1u
C10
0.1u
GND
1v1
C11
1u
C12
0.1u
GND
+5V
U5
TLV70033DDCR
IN
EN
OUT
NC
GND
3v3
C5
0.1u
C6
0.1u
GND
3v3
R16
10k
SPI0_CS
U2
TLV71311PDBVR
IN
GND
EN
OUT
NC
3v3
1v1
C1
0.1u
C2
0.1u
GND
USB1
TYPE-C 16PIN 2MD(073)
SHELL
GND
VBUS
CC2
SBU1
DP2
DN1
DP1
DN2
CC1
SBU2
VBUS
SHELL
GND
+5V
5k1
R1
USB_P
USB_N
R2
5k1
+5V
GND
GND
TITLE:
Aaryav's Linux Console
REV: 1.0
Company:
Sheet: 1/1
Date: 2024-05-9
Drawn By: aaryav
EasyEDA