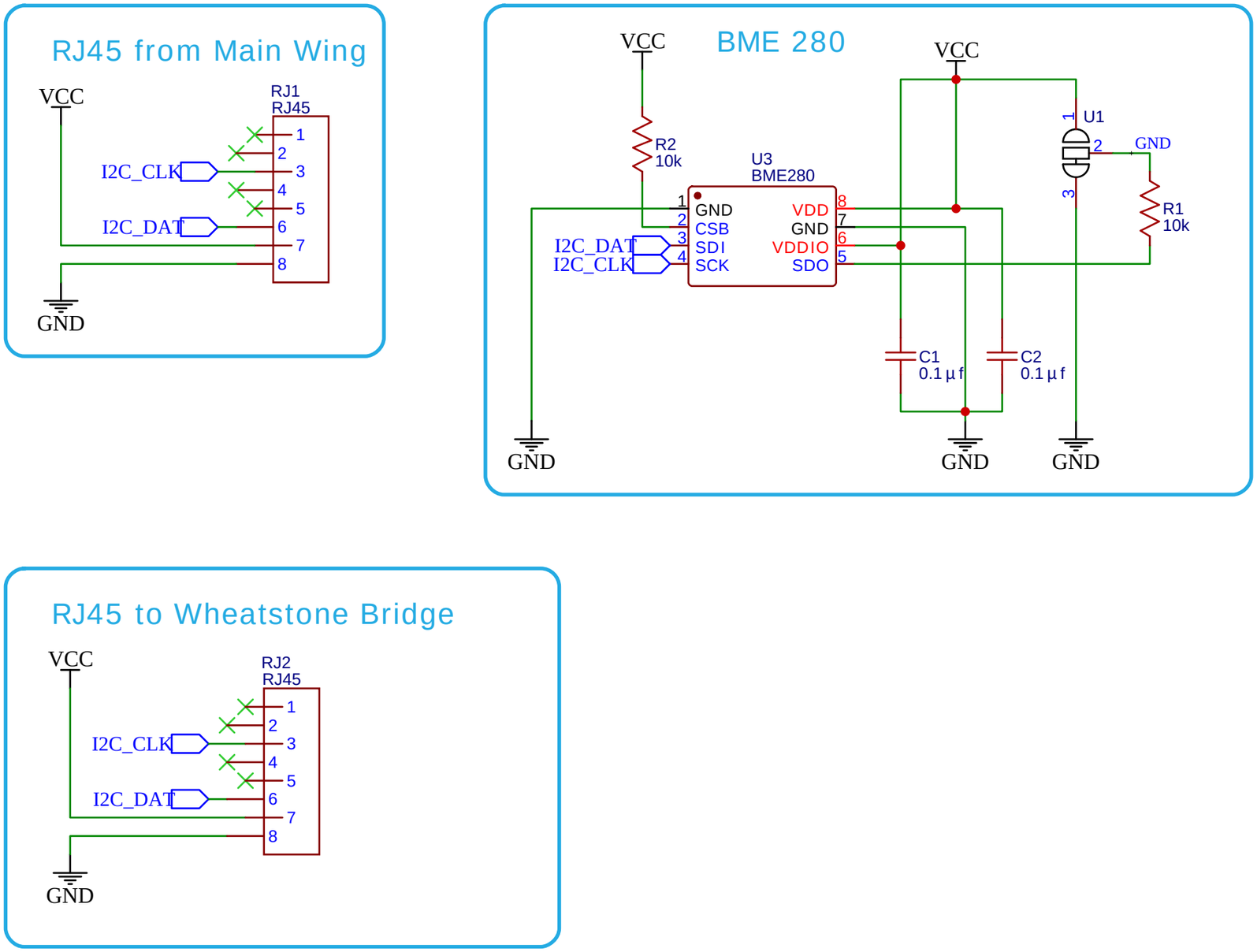

TITLE: Apiarium - External Climate Bridge		REV: 2.a
	Company: Wilderness Labs	Sheet: 1/1
	Date: 2020-04-17 Drawn By: bryan costanich	