Dual Ethernet Module

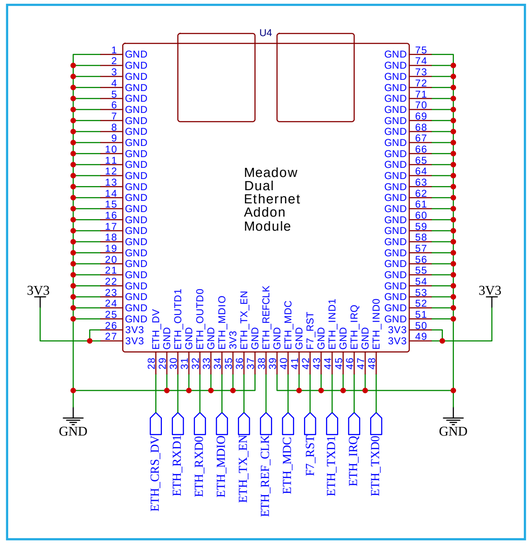

SD Card

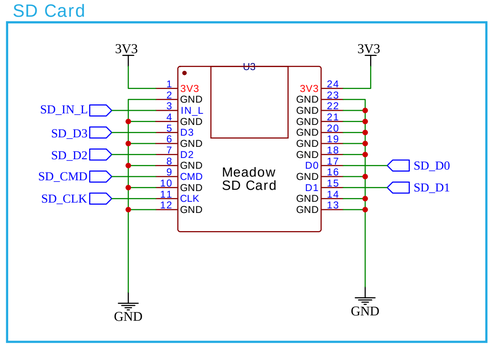

USB/Power/Reset

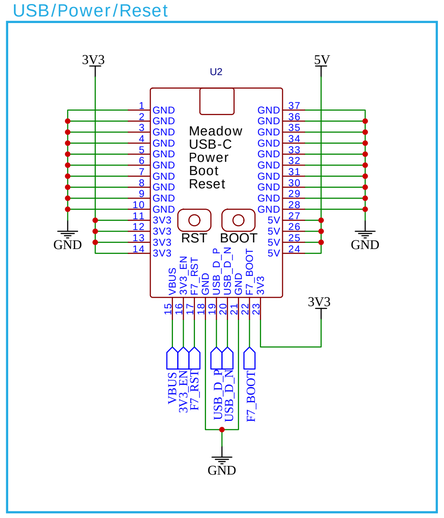

Debug Header

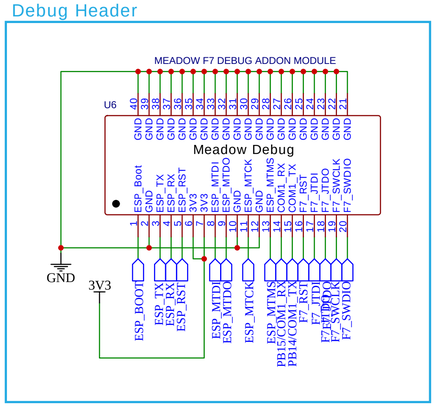

Enable Switch

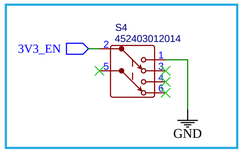

Stackup/Controlled Impedance:
- SD Signals: 50Ω
  - Outer layer: 0.29mm width
  - Inner layer: 0.23mm width
- USB: 90Ω Diff Pair
  - Outer layer: 0.19mm width, 0.11mm spacing
  - Inner layer: 0.13mm width, 0.11mm spacing
- MCU -> PHY - 50Ω Single-Ended
  - Outer layer: 0.29mm width, 0.127mm spacing
  - Inner layer: 0.24mm width, 0.127mm spacing
- JLCPCB Stackup: JLC7628

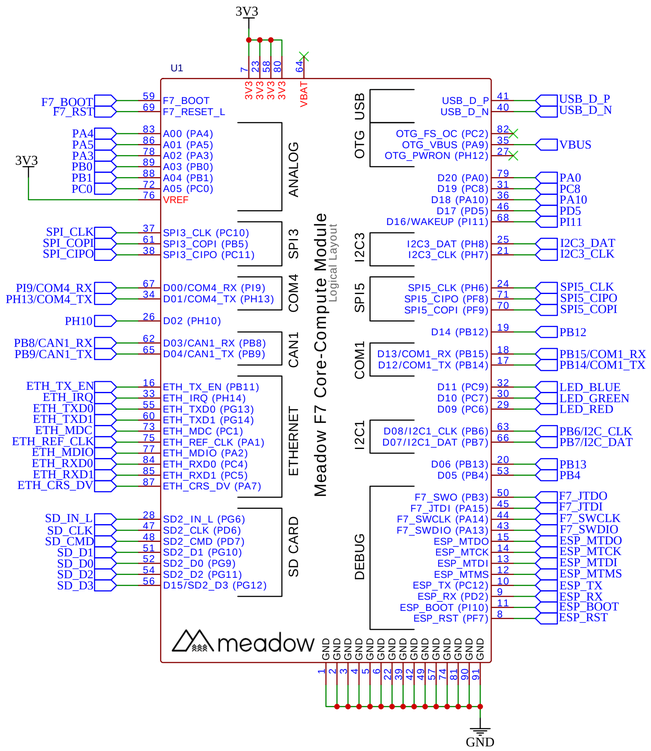

Reserved Interrupts

10, 12, 13

Interrupt Table

X	XX

PWM Timers

RGB_RED	TIM8_1
RGB_GREEN	TIM3_2*
RGB_BLUE	TIM8_4

RGB LED

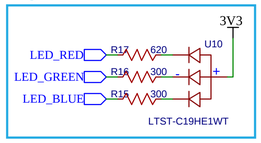

Headers

IO

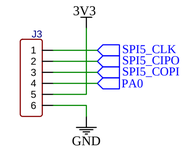

STEMMA QT I2C

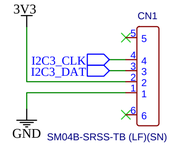

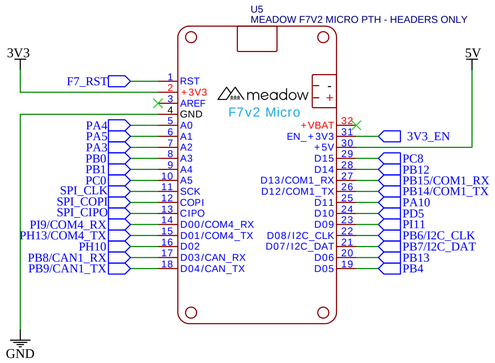

TITLE: F7v2 Core-Compute Dev Module w/Dual Ether.			REV: v2.a
	Company: Wilderness Labs		Sheet: 1/1
	Date: 2023.01	Drawn By: bryan costanich	