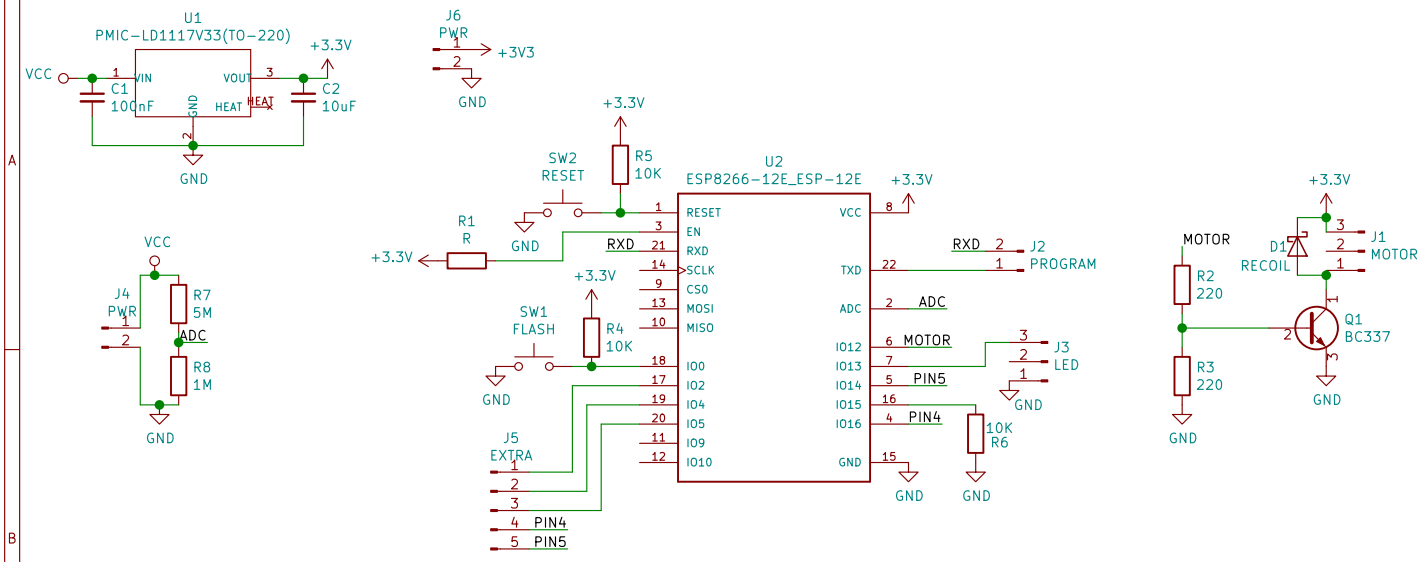

Neuro Markers of Expertise VIP

Author: Will Buxton

Sheet: /

File: NeuMaE.sch

Title: Cue Stick Schematic

Size: A4	Date: 2020-03-06	**Rev: 1**
KiCad E.D.A. kicad (5.0.1-3-g963ef8bb5)		Id: 1/1