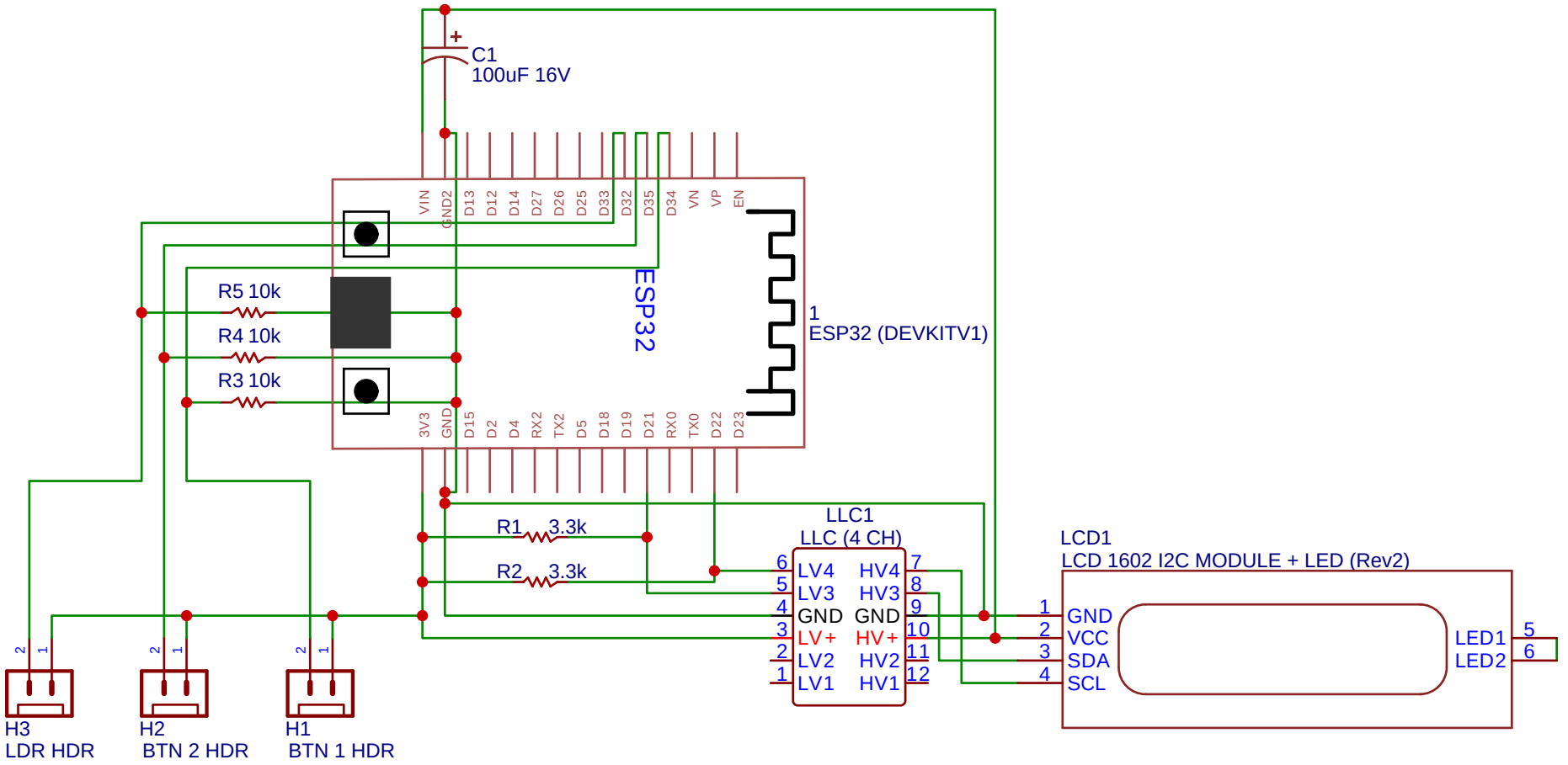

TITLE: Desk LCD Driver	REV: 1.0
Company: T93	Sheet: 1/1
Date: 2024-10-29 Drawn By: williammarktaylor	