# Course 46725 Assignment 1
# Design of a three-phase transformer

Feb. 2026

## 1. Practical Info

- The Assignment 1 is to be done as a part of the group of up to 3 students.
- The report is submitted and evaluated as a group effort.
- Students should include their account of the individual effort during the group work in the report.
- The design report needs to include details about all design consideration and calculation including the material choices, operating variables values, etc.
- To confirm that the design of the transformer is optimal for given constraints, the report needs to include the figures and discussion regarding key figure of merits such as the transformer cost, efficiency, weight/volume versus the design parameters such are core flux density, winding current density, voltage per turn value, aspect ratio of transformer (height/width). The sensitivity analysis of the raw material cost to an overall transformer cost is also expected.

## 2. Project Objective:

**A customer has hired your group to deliver <u>cost optimized design</u> of a three phase YD distribution transformer with nominal primary to secondary line to line voltages 36kV/3kV, 50Hz with nominal apparent power 3000 kVA. Your design must meet following:**

- Efficiency > 90% with the 50% rated output power at unity power factor and rated output voltage.
- Efficiency > 97% with the 75% rated output power at unity power factor and rated output voltage.
- The transformer will be used in a power system where the short circuit current of the transformer should not exceed 4x nominal value due to the existing switchgear ratings.

<u>Design constraints (due to production):</u>

The transformer can be cooled either by natural convection of air or natural convection of oil.

**<u>Windings:</u>**

- In the case of the air-cooled transformer, the current density in windings (assumed Cu is used) must not exceed 0.5 A/mm2 (rms), while in the case of the oil transformer, the current density in windings needs to be limited to 0.75 A/mm2 (rms).
- The laminations used for the transformer core should be NGO silicon steel. The datasheet for BH magnetization of the steel laminations and specific loss can be found in the Assignment documentation
- The windings can be made with either Cu or Al wire. (specific loss must remain equal or lower than what is specified for cupper)
- The wire insulation can handle up to 1.5 Volts/turn and is assumed to be 0.5mm thick in both cases.

**<u>Geometrical constraints:</u>**

- The space between the winding's edges (either to the core or to other winding) is minimum 20 mm.
- The stacking factor of the laminations can be assumed to be 90%.
- The available steel laminations are cut into "I" segments of specific length and width. These can be jointed with interleaved corners to achieve 90 degrees. This, as a consequence, will introduce many tiny airgaps which can be approximated with one air gap of 1 mm normal to the flux path.

**Raw materials supply cost:**

The price of copper wire with insulation can be assumed to be €30/kg while the cost of aluminum wire can be assumed to be €3/kg, the core laminations including cost of laser cutting for M1000 is €3/kg, while for M400 lamination can be obtained for €10/kg. In the case of oil cooled transformer, make a rough accounting of the cost contribution of silicon transformer oil by assuming €5/kg for oil and €1/kg for structural steel used for the tank.

## 3. Design Report Requirements

Design process is iterative in the nature and thus you are therefore encouraged to carry out your calculations with the aid of computer software (Matlab, Excel….). It is important to adopt these underlaying design variables in your process

- $J_{winding}$ ➔ Current density in the winding wire, J, in [A/mm$^2$],
- $K_{insulation}$ ➔ Volts-per-turn for the winding
- $B_{core}$ ➔ Peak flux density in the core, B, in [T]

The design report must include the documentation of the designing process, governing equations and the discussion of results. Specifically, each transformer design candidate needs to include:

- Geometry specifications of the magnetic core, windings layout, number of turns, and specification of underlaying design variables ($B_{core}$, $J_{winding}$, $K_{insulation}$)
- Electromagnetic parameters for "per phase" T equivalent circuit of the transformer calculated from geometry and materials consideration using first principles including derivation procedure.
- Analysis of transformer performance parameters, like efficiency & voltage regulation and included estimated cost and cost breakdown.
- Sensitivity analysis and discussion of the key design variables ($B_{core}$, $J_{winding}$, $K_{insulation}$) on the overall cost and efficiency of transformer.

## 4. Notes on the design process and the methodology

NOTE: Use the following as an inspiration of the design process structure, rather than a comprehensive stepwise guide

Step1: To gain some insights into the dimensions and the geometry of the transformer, you are encouraged to start design process by specifying the single-phase transformer (which can later be connected into the 3-phase transformer)

Step2: Start the design by considering an ideal transformer. Determine: the transformer ratio, the turns ratio, the nominal voltage applied across the primary and secondary phase windings.

Step3: Choose design variables ($B_{core}$, $J_{winding}$, $K_{insulation}$) and based on the wire insulation and on the peak flux density in the core, determine: the number of turns of primary and secondary windings, the cross-section area of the core.

Step4: Estimate the size of the winding's windows such that the current density requirement is met. Initially, you can use rated current of each winding as an input. Make sure no load current does violate the current density constraints.

Step5: Previous step will affect the core dimension, i.e. the overall core length. Here, consolidate all geometry inputs from previous steps, assert the geometrical constrains and come up with the detail core & winding dimensions.

Step6: Perform the electromagnetic analysis of the design and derive ECD parameters.

- calculate windings resistance from winding geometry and number of turns
- calculate magnetization inductance based on the magnetic core analysis by using the magnetic steel data supplied with Assignment.
- The magnetizing branch is associated with the magnetizing current, necessary to create a magnetic field in the core, with the core losses due to eddy currents and hysteresis loss. (Bear in mind that the coils do not only carry load current, but both magnetizing current and the load current)
- You can use the procedure described in appendix to calculate the leakage impedance in the equivalent circuit of the transformer, accounting for the winding's geometry

Step7: When the ECD for the transformer is derived, perform the transformer analysis and make sure performance is within the prescribed specifications, namely efficiency, short circuit current and voltage regulation.

**Iteration:** Iterate steps 3-7 by revising the design variable ($B_{core}$, $J_{winding}$, $K_{insulation}$) and/or design geometry so that all the operating specifications are met. Investigate for what $B_{core}$, $J_{winding}$, $K_{insulation}$ designs are viable by considering coarse design space where, for example:

- $B_{core}$ varies between 0.25T and 1.5T by step of 0.25T
- $J_{winding}$, varies between 0.1A/mm2 and max value for conductor by step of 0.1A/mm2
- $K_{insulation}$ varies between 0.25V/Turn and 1.5 V/Turn by step of 0.25 V/Turn

Step8: Sensitivity and fine-tuning of the design. Once you have designs which satisfies the requirements and are candidates for optimal cost, perform the sensitivity analysis: vary the input design variables slightly and investigate what impact will that have on the overall cost of the transformer. If the cost of the transformer becomes lower, you adopt new design variables and repeat the analysis process.

Step9: Once the cost optimized single phase transformer is achieved, consider the difference between 3 phase and single-phase transformer in terms of the geometry and the flux path. The 3f transformer can be realised from single phase transformer as illustrated in figure bellow.

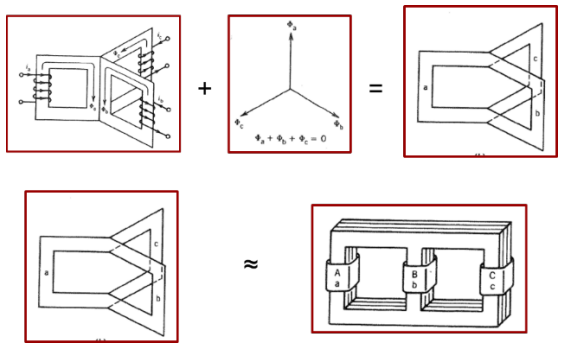


Hence, three phase integrated design will affect some core parameters and ECD parameters derived in single phase design. Update these for three phase design and include them in report.