imx8mlp_pio

File: imx8mlp_pio.kicad_sch

Ethernet

File: ethernet.kicad_sch

USB

File: usb.kicad_sch

power_unit

File: power_unit.kicad_sch

PCIe_SDCard

File: pci_e.kicad_sch

MCU

File: microcontroller.kicad_sch

CSI_DSI

File: csi_dsi.kicad_sch

LVDS_HDMI

File: lvds_hdmi.kicad_sch

Audio

File: audio.kicad_sch

H1 MountingHole

H2 MountingHole

H3 MountingHole

H4 MountingHole

serial_interface

File: serial_interface.kicad_sch

OutGPIO_CAN

File: outGpio_CAN.kicad_sch

Sheet: /
File: BB_IMX8MLP.kicad_sch

Title:

Size: A4	Date:	**Rev:**
KiCad E.D.A. 10.0.0		Id: 1/19

Connector_Right

File: connector_right.kicad_sch

Connector_Left

File: connector_left.kicad_sch

Sheet: /imx8mlp_pio/
File: imx8mlp_pio.kicad_sch

Title:

Size: A4	Date:	**Rev:**
KiCad E.D.A. 10.0.0		Id: 2/19

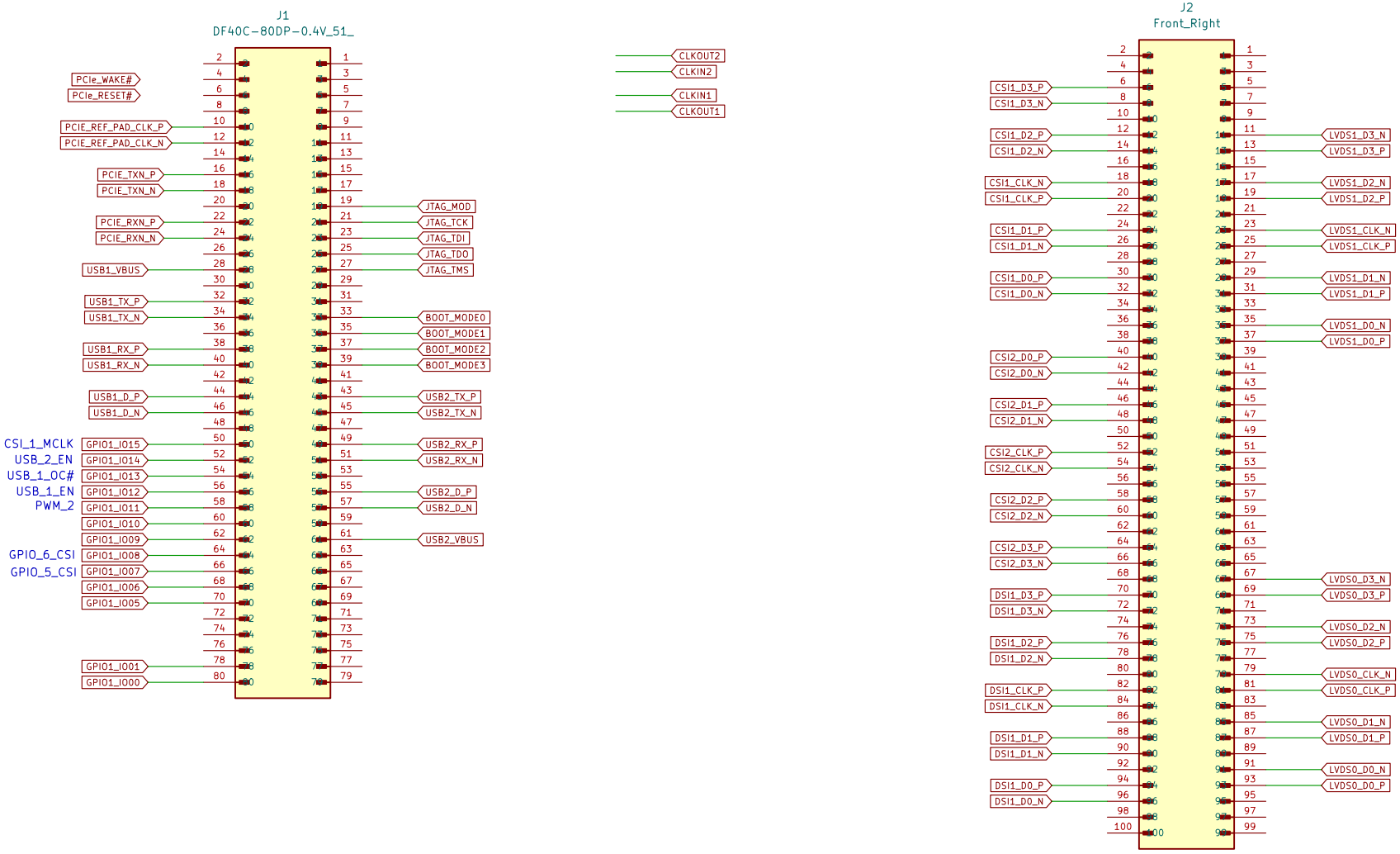

Sheet: /imx8mlp_pio/Connector_Right/
File: connector_right.kicad_sch

Title:

Size: A4	Date:	Rev:
KiCad E.D.A. 10.0.0		Id: 16/19

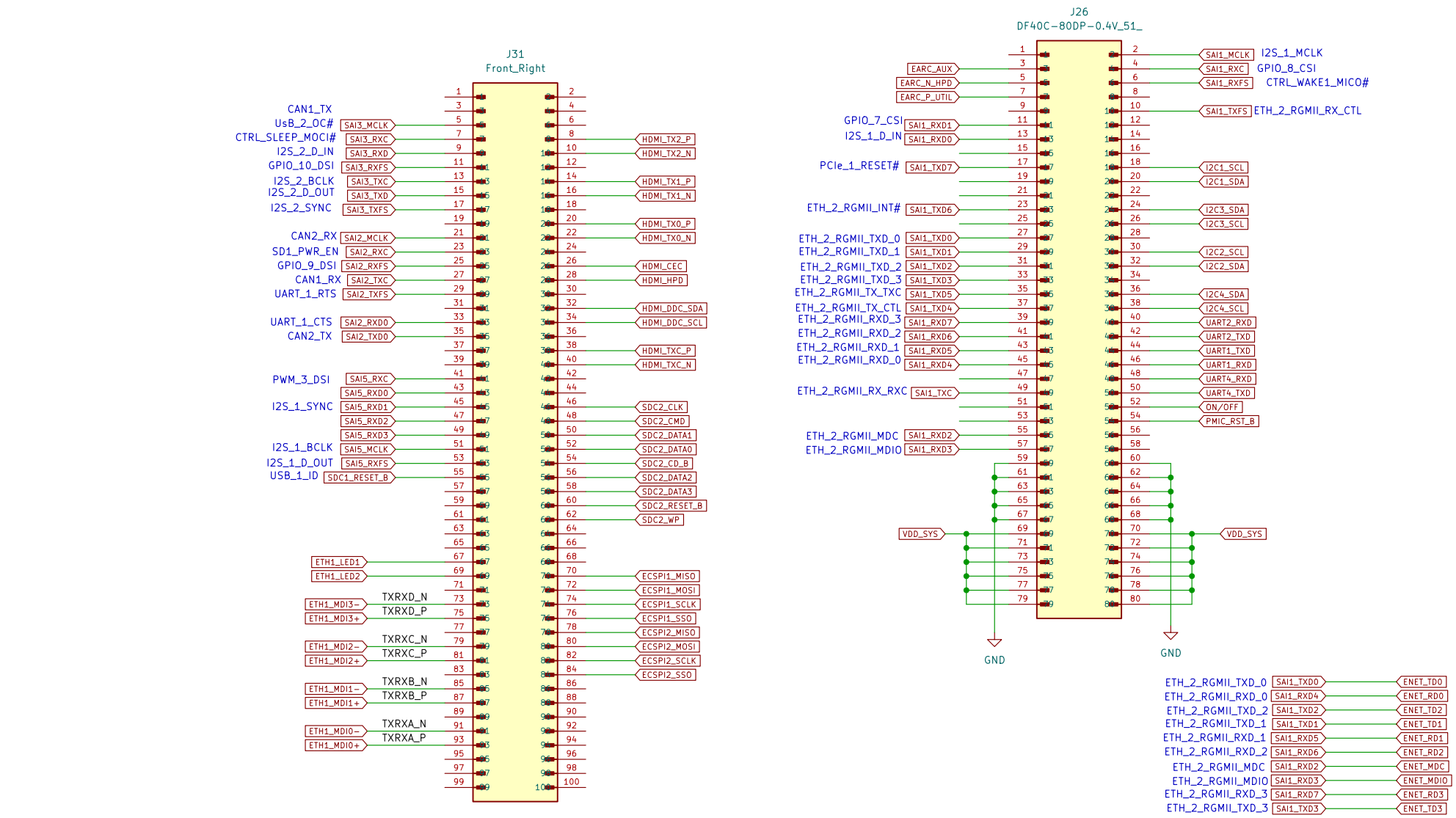

Sheet: /imx8mlp_pio/Connector_Left/
File: connector_left.kicad_sch

Title:

Size: A4	Date:	Rev:
KiCad E.D.A. 10.0.0		Id: 17/19

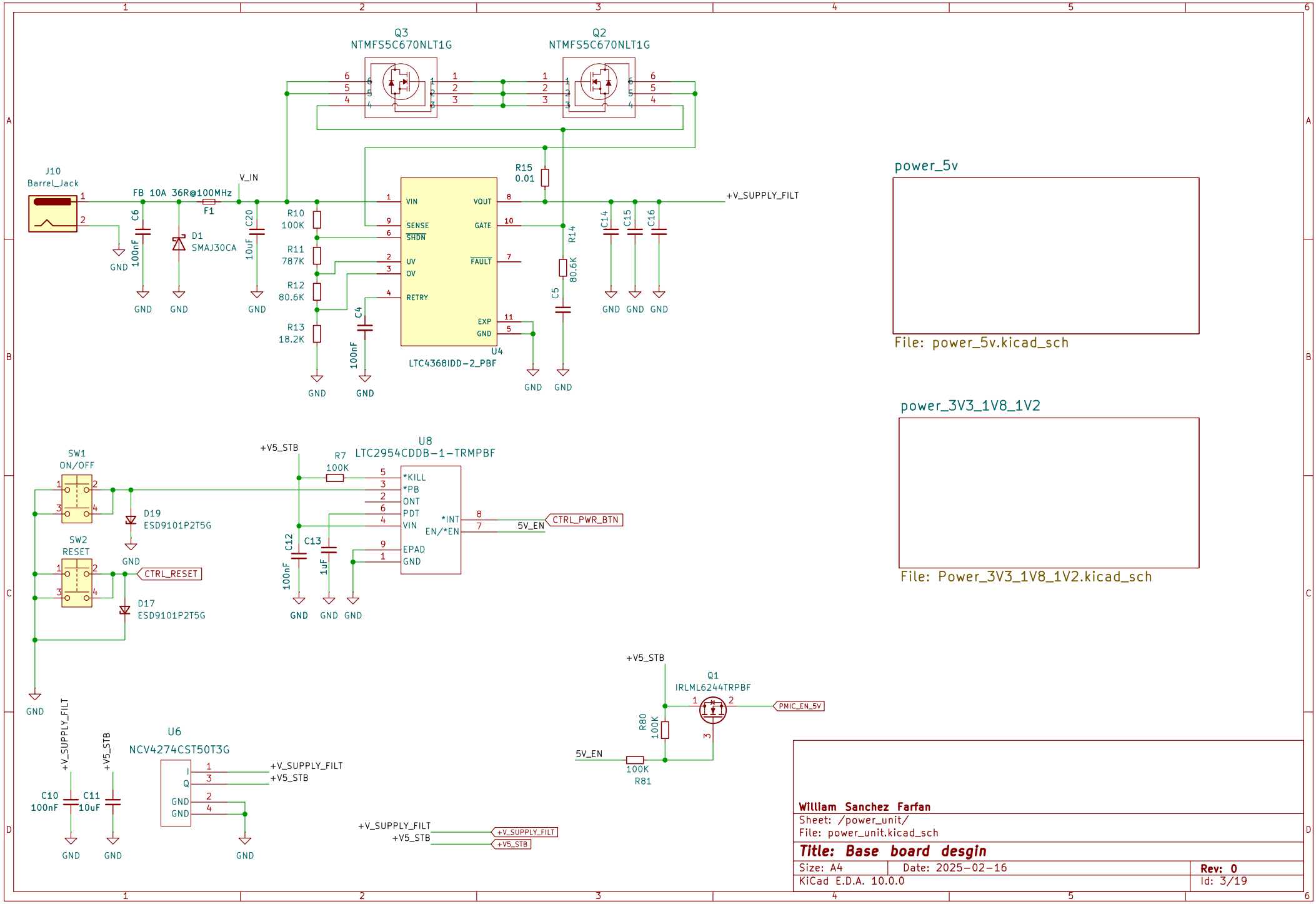
Q3
NTMFS5C670NLT1G
Q2
NTMFS5C670NLT1G
J10
Barrel_Jack
FB 10A 36R@100MHz
F1
V_IN
C6
100nF
D1
SMAJ30CA
C20
10uF
R10
100K
R11
787K
R12
80.6K
R13
18.2K
C4
100nF
VIN
SENSE
SHDN
UV
OV
RETRY
VOUT
GATE
FAULT
EXP
GND
U4
LTC4368IDD-2_PBF
R15
0.01
R14
80.6K
C5
C14
C15
C16
+V_SUPPLY_FILT
GND
power_5v
File: power_5v.kicad_sch
power_3V3_1V8_1V2
File: Power_3V3_1V8_1V2.kicad_sch
SW1
ON/OFF
SW2
RESET
D19
ESD9101P2T5G
D17
ESD9101P2T5G
CTRL_RESET
+V5_STB
R7
100K
U8
LTC2954CDDB-1-TRMPBF
*KILL
*PB
ONT
PDT
VIN
EPAD
GND
*INT
EN/*EN
5V_EN
CTRL_PWR_BTN
C12
100nF
C13
1uF
+V_SUPPLY_FILT
+V5_STB
C10
100nF
C11
10uF
U6
NCV4274CST50T3G
I
Q
GND
GND
Q1
IRLML6244TRPBF
PMIC_EN_5V
R80
100K
5V_EN
100K
R81
William Sanchez Farfan
Sheet: /power_unit/
File: power_unit.kicad_sch
Title: Base board desgin
Size: A4
Date: 2025-02-16
Rev: 0
KiCad E.D.A. 10.0.0
Id: 3/19

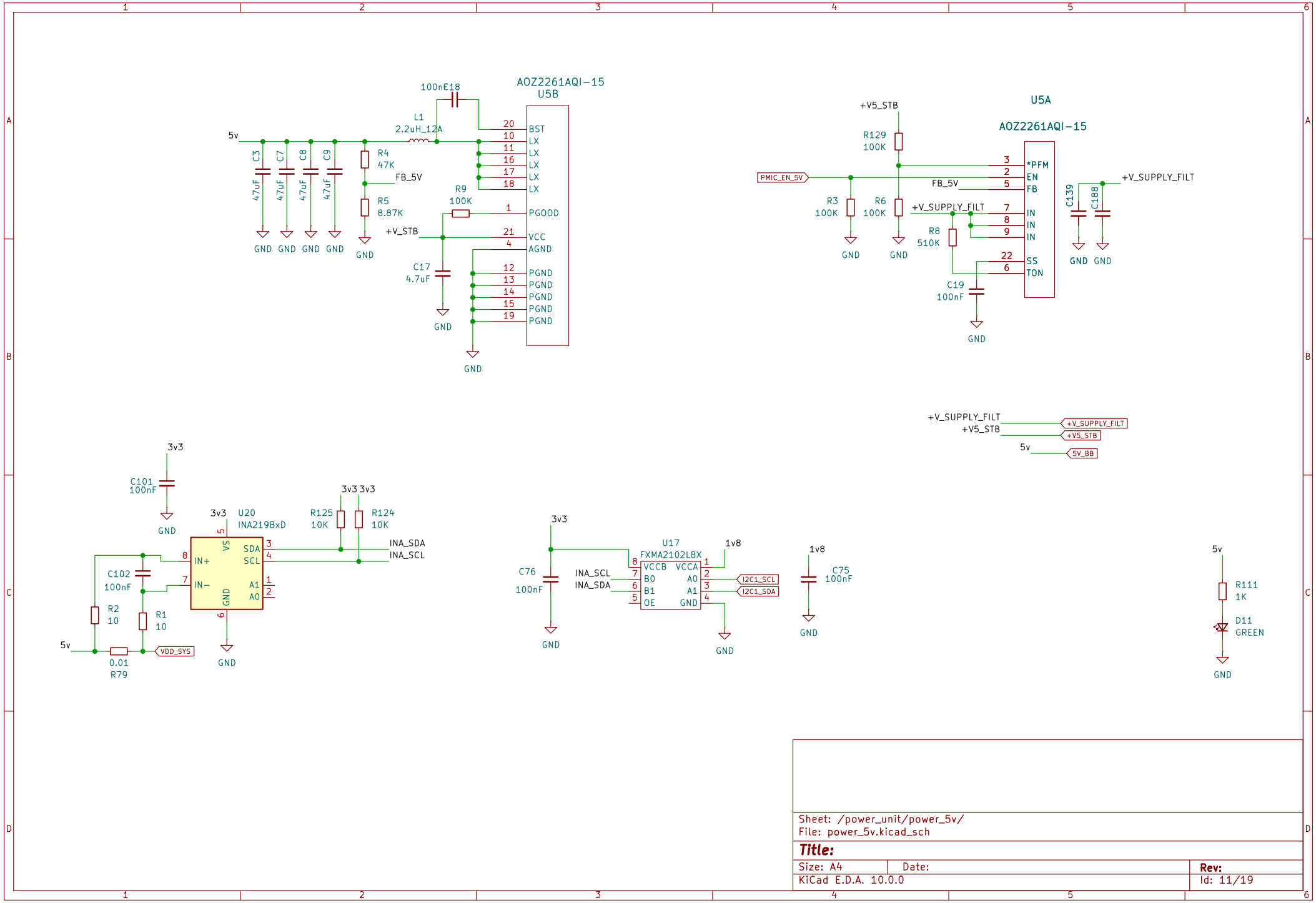

Sheet: /power_unit/power_5v/
File: power_5v.kicad_sch

Title:

Size: A4	Date:	Rev:
KiCad E.D.A. 10.0.0		Id: 11/19

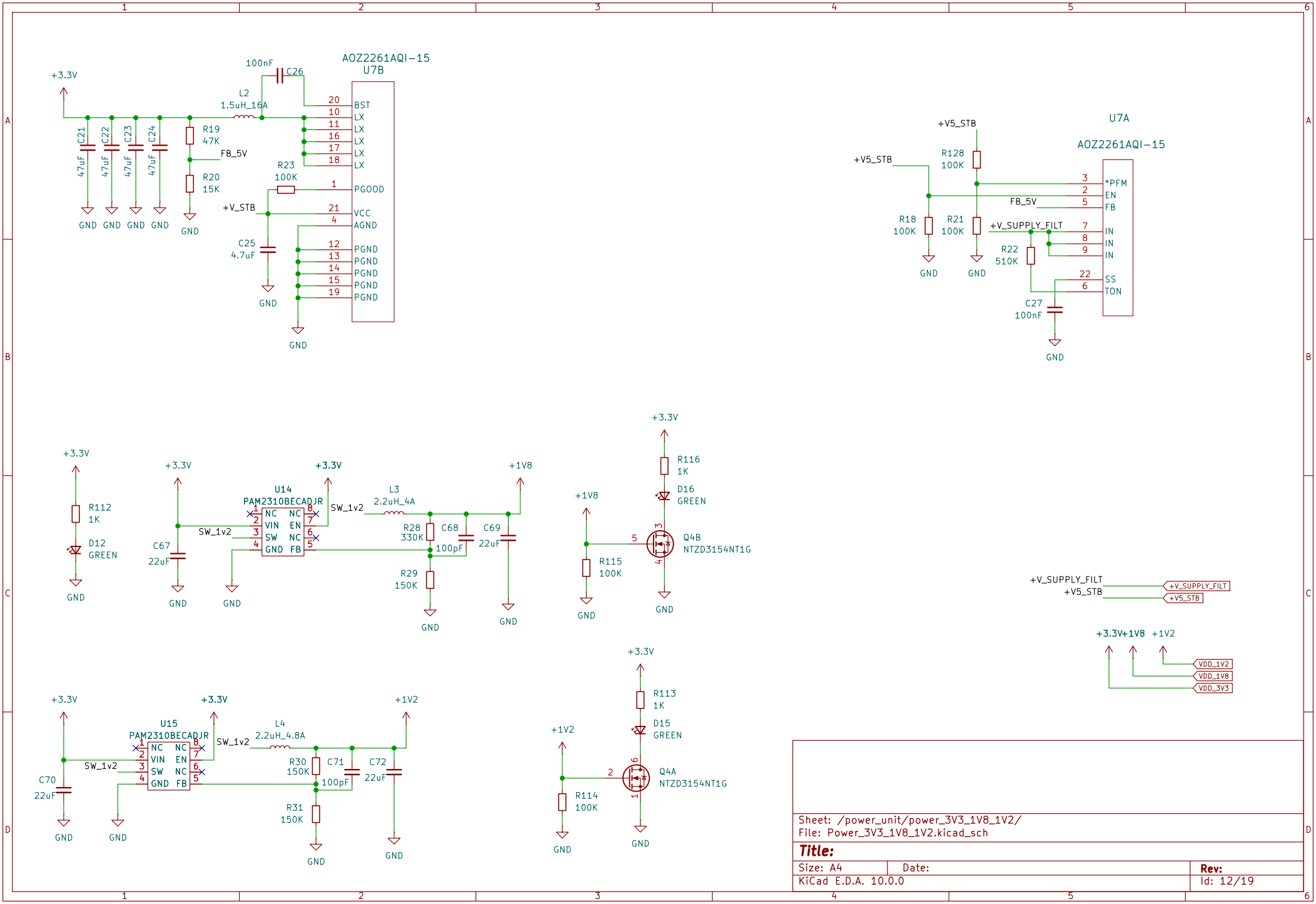
AOZ2261AQI-15
U7B
+3.3V
100nF
C26
L2
1.5uH_16A
C21
C22
C23
C24
47uF
R19
47K
FB_5V
R20
15K
R23
100K
+V_STB
C25
4.7uF
BST
LX
PGOOD
VCC
AGND
PGND
GND
U7A
+V5_STB
R128
100K
R18
100K
R21
100K
R22
510K
+V_SUPPLY_FILT
C27
100nF
*PFM
EN
FB
IN
SS
TON
U14
PAM2310BECADJR
NC
VIN
SW
GND
L3
2.2uH_4A
SW_1v2
C67
22uF
R28
330K
C68
100pF
C69
22uF
R29
150K
+1V8
R112
1K
D12
GREEN
R116
1K
D16
GREEN
R115
100K
Q4B
NTZD3154NT1G
U15
L4
2.2uH_4.8A
+1V2
C70
22uF
R30
150K
C71
100pF
C72
22uF
R31
150K
R113
1K
D15
GREEN
R114
100K
Q4A
NTZD3154NT1G
VDD_1V2
VDD_1V8
VDD_3V3
Sheet: /power_unit/power_3V3_1V8_1V2/
File: Power_3V3_1V8_1V2.kicad_sch
Title:
Size: A4
Date:
Rev:
KiCad E.D.A. 10.0.0
Id: 12/19

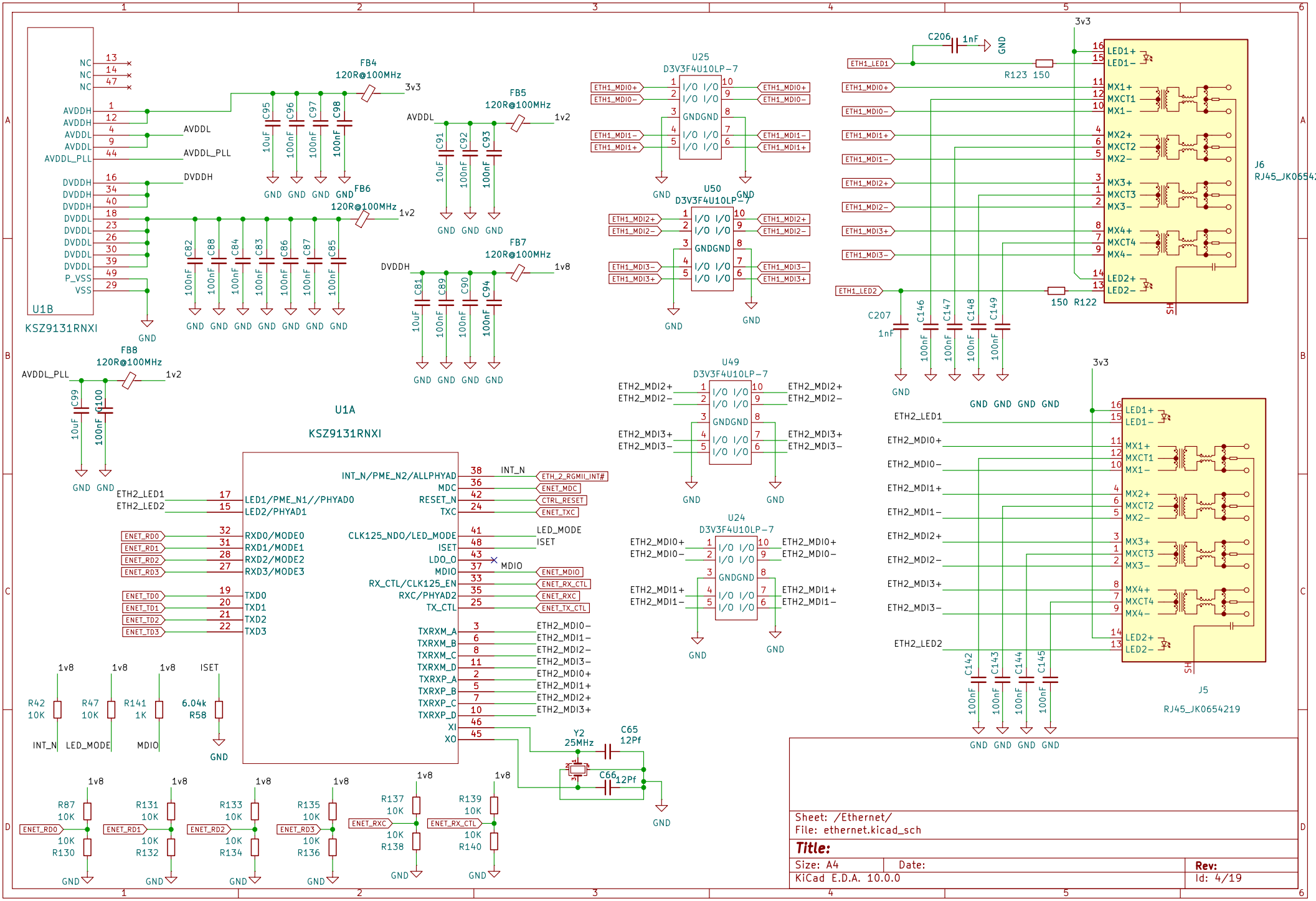
U1B
KSZ9131RNXI
NC
AVDDH
AVDDL
AVDDL_PLL
DVDDH
DVDDL
P_VSS
VSS
FB4
120R@100MHz
FB5
120R@100MHz
FB6
120R@100MHz
FB7
120R@100MHz
FB8
120R@100MHz
3v3
1v2
1v8
GND
U25
D3V3F4U10LP-7
U50
D3V3F4U10LP-7
U49
D3V3F4U10LP-7
U24
D3V3F4U10LP-7
ETH1_MDI0+
ETH1_MDI0-
ETH1_MDI1+
ETH1_MDI1-
ETH1_MDI2+
ETH1_MDI2-
ETH1_MDI3+
ETH1_MDI3-
ETH1_LED1
ETH1_LED2
C206
1nF
R123 150
R122 150
C207
1nF
J6
RJ45_JK0654219
J5
RJ45_JK0654219
LED1+
LED1-
MX1+
MXCT1
MX1-
MX2+
MXCT2
MX2-
MX3+
MXCT3
MX3-
MX4+
MXCT4
MX4-
LED2+
LED2-
SH
U1A
KSZ9131RNXI
INT_N/PME_N2/ALLPHYAD
MDC
RESET_N
TXC
LED1/PME_N1//PHYAD0
LED2/PHYAD1
RXD0/MODE0
RXD1/MODE1
RXD2/MODE2
RXD3/MODE3
TXD0
TXD1
TXD2
TXD3
CLK125_NDO/LED_MODE
ISET
LDO_O
MDIO
RX_CTL/CLK125_EN
RXC/PHYAD2
TX_CTL
TXRXM_A
TXRXM_B
TXRXM_C
TXRXM_D
TXRXP_A
TXRXP_B
TXRXP_C
TXRXP_D
XI
XO
ETH_2_RGMII_INT#
ENET_MDC
CTRL_RESET
ENET_TXC
ENET_MDIO
ENET_RX_CTL
ENET_RXC
ENET_TX_CTL
ETH2_LED1
ETH2_LED2
ETH2_MDI0+
ETH2_MDI0-
ETH2_MDI1+
ETH2_MDI1-
ETH2_MDI2+
ETH2_MDI2-
ETH2_MDI3+
ETH2_MDI3-
ENET_RD0
ENET_RD1
ENET_RD2
ENET_RD3
ENET_TD0
ENET_TD1
ENET_TD2
ENET_TD3
R42 10K
R47 10K
R141 1K
6.04k R58
Y2 25MHz
C65 12Pf
C66 12Pf
R87 10K
R130 10K
R131 10K
R132 10K
R133 10K
R134 10K
R135 10K
R136 10K
R137 10K
R138 10K
R139 10K
R140 10K
Sheet: /Ethernet/
File: ethernet.kicad_sch
Title:
Size: A4
Date:
Rev:
KiCad E.D.A. 10.0.0
Id: 4/19

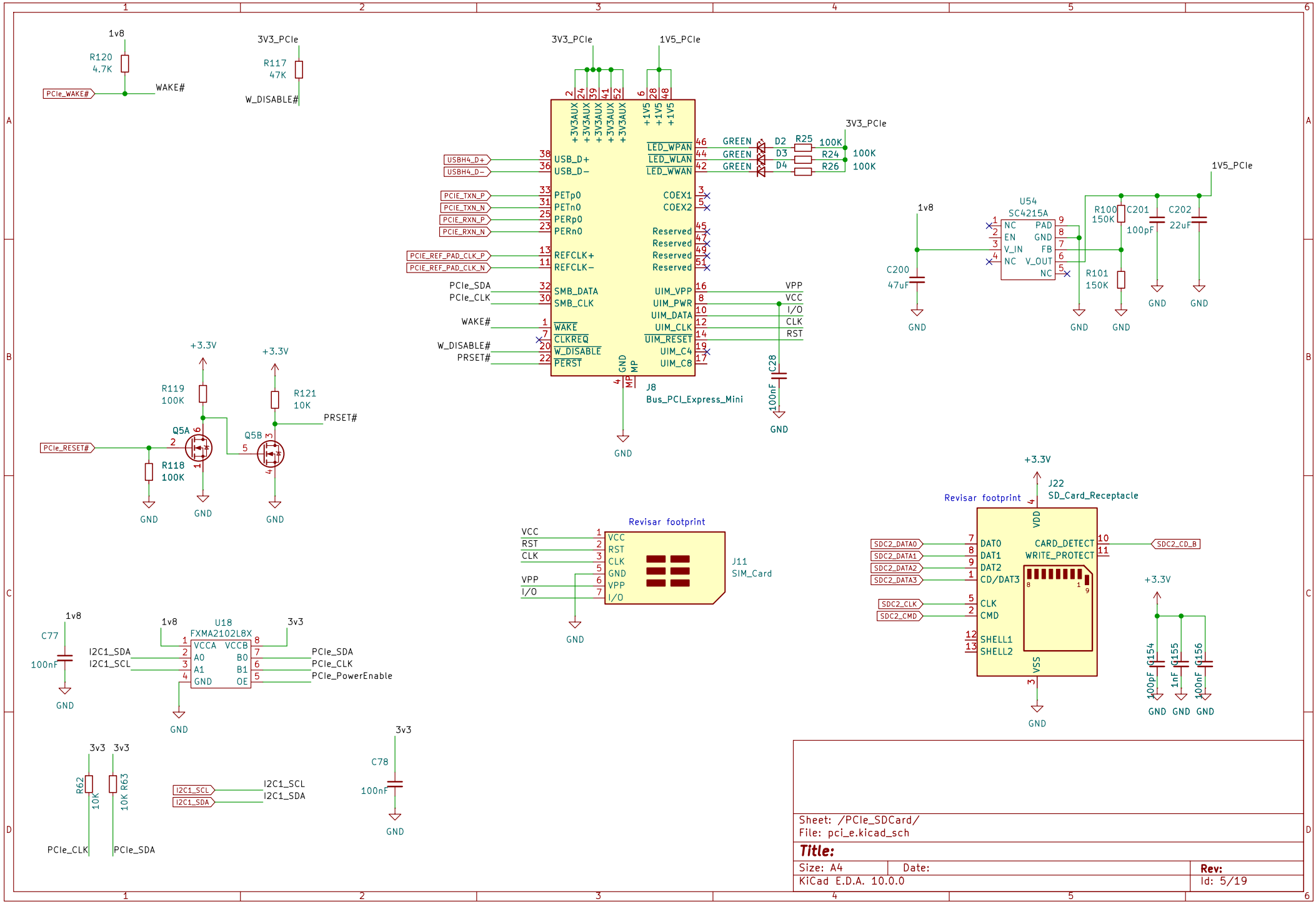

Sheet: /PCIe_SDCard/
File: pci_e.kicad_sch

Title:

Size: A4	Date:	Rev:
KiCad E.D.A. 10.0.0		Id: 5/19

CSI

File: csi.kicad_sch

DSI

File: dsi.kicad_sch

Sheet: /CSI_DSI/
File: csi_dsi.kicad_sch

Title:

Size: A4	Date:	**Rev:**
KiCad E.D.A. 10.0.0		Id: 6/19

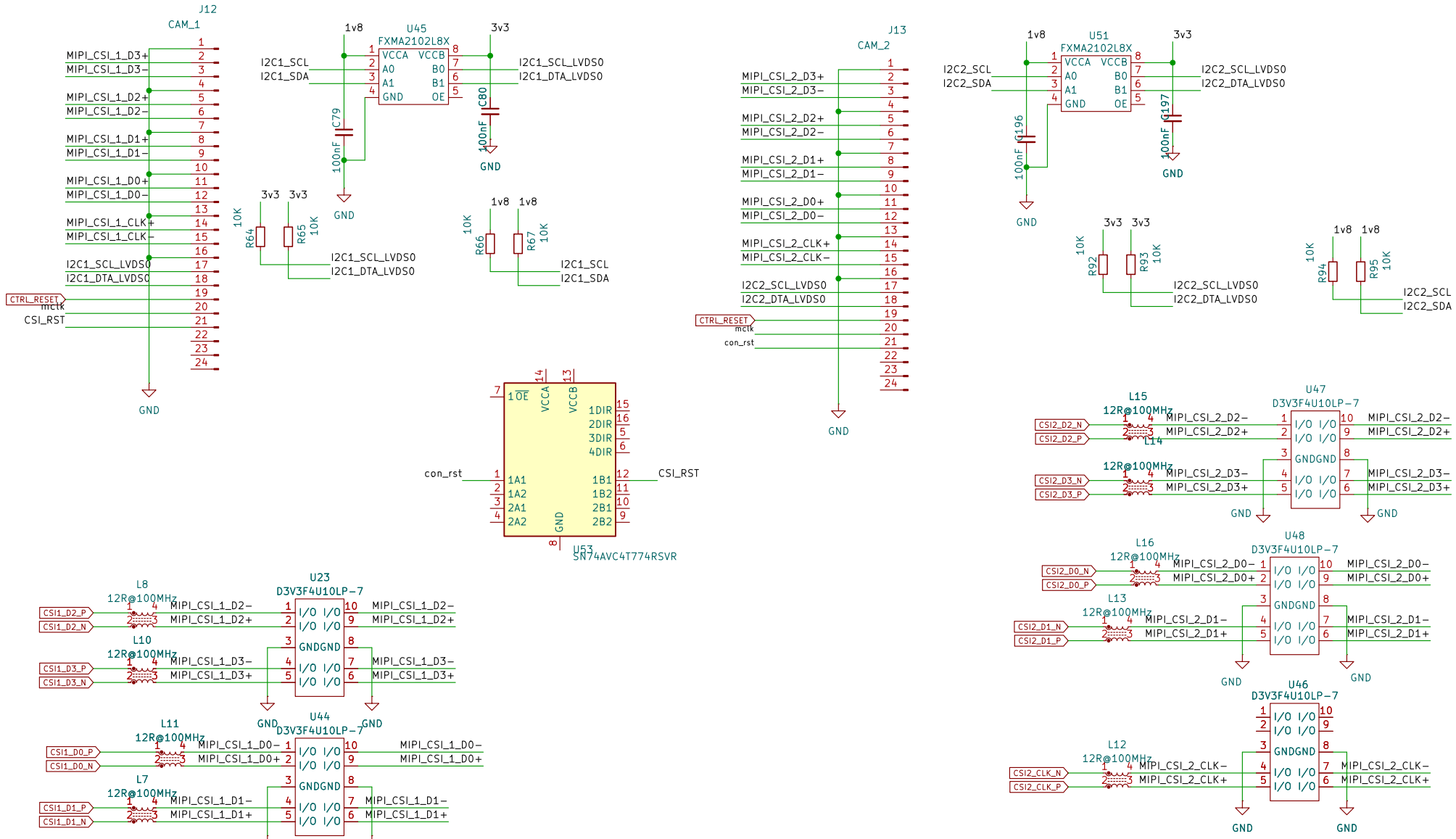

Sheet: /CSI_DSI/CSI/
File: csi.kicad_sch

Title:

Size: A4	Date:	Rev:
KiCad E.D.A. 10.0.0		Id: 18/19

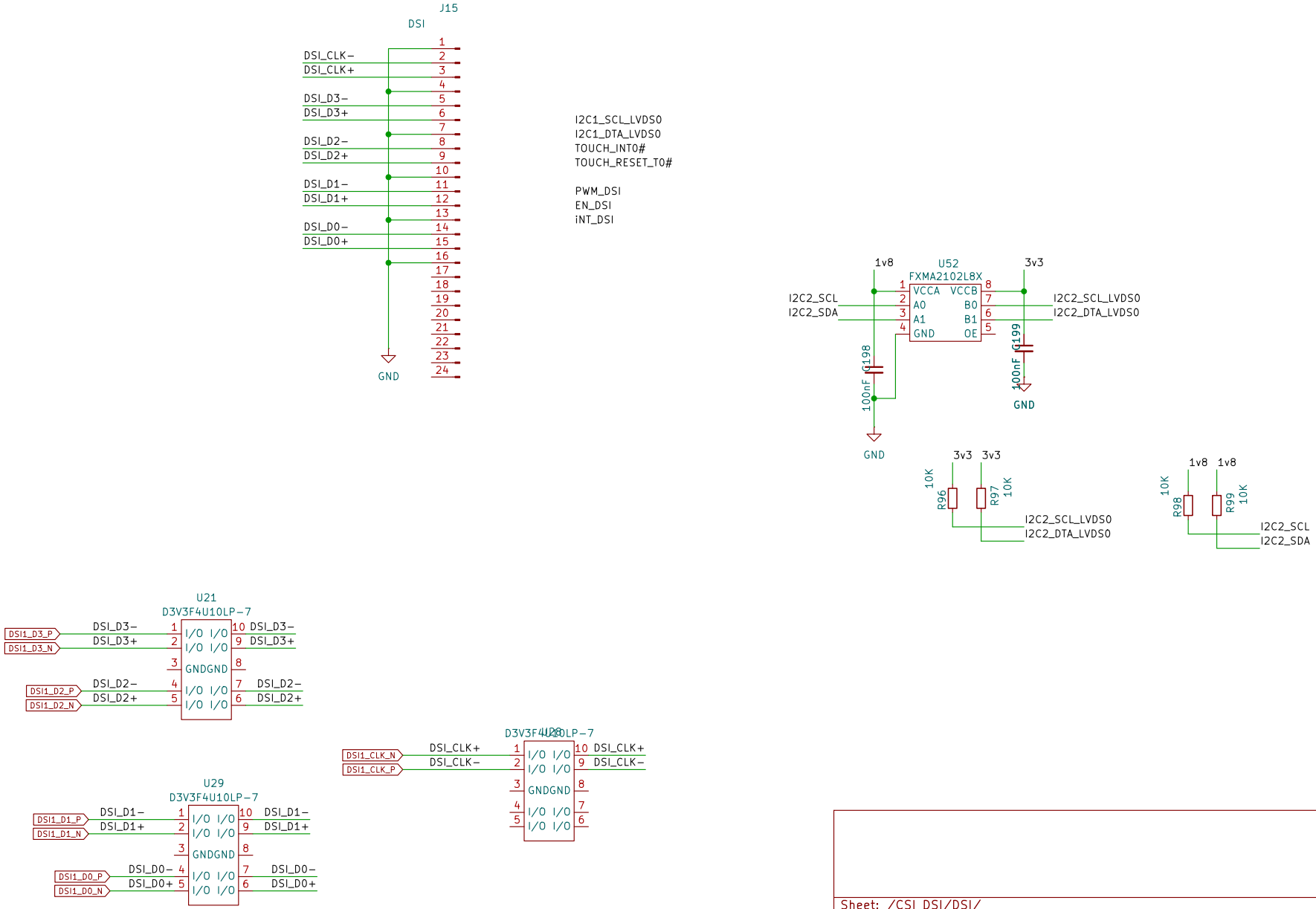

Sheet: /CSI_DSI/DSI/
File: dsi.kicad_sch

Title:

Size: A4	Date:	Rev:
KiCad E.D.A. 10.0.0		Id: 19/19

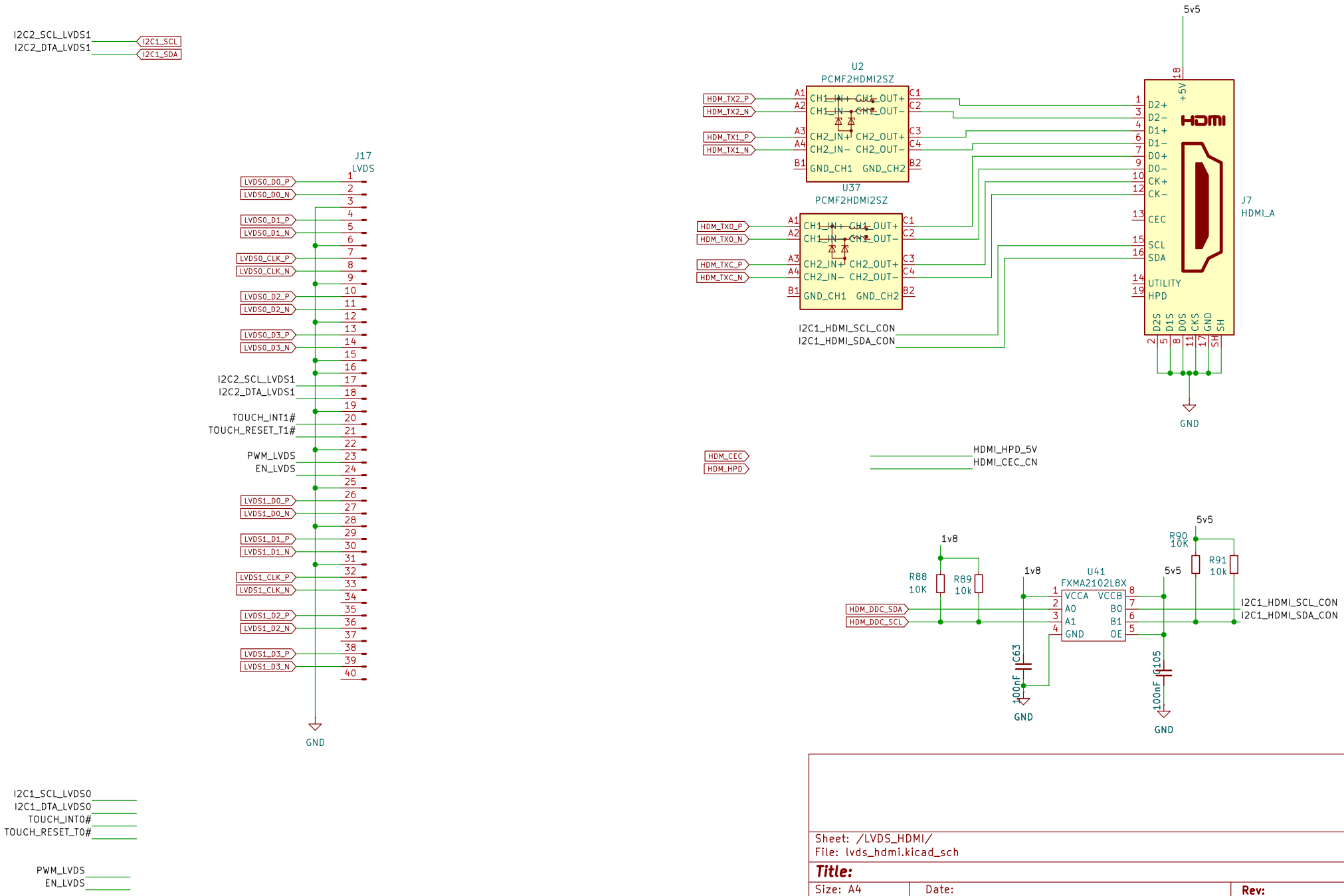

Sheet: /LVDS_HDMI/
File: lvds_hdmi.kicad_sch

Title:

Size: A4	Date:	Rev:
KiCad E.D.A. 10.0.0		Id: 7/19

GPIO19/x1 xtal
GPIO18/x2 xtal

Default boot mode GPIO Pins
Pin0 – GPIO32
Pin1 – GPIO24

00 – Boot from parallel gpio
01 – Boot from sci / wait mode
TxDA = GPIO 29 (default), GPIO1 GPIO8, Gpio7,GPIO16
RxDa = GPIO 28 (default), GPIO0, GPIO9, GPIO3 GPIO3
10 – Boot from CAN
11 – Boot from flash

Memeoria EEPROM
PWM
CAN
I2C
SPI
UART
Leds

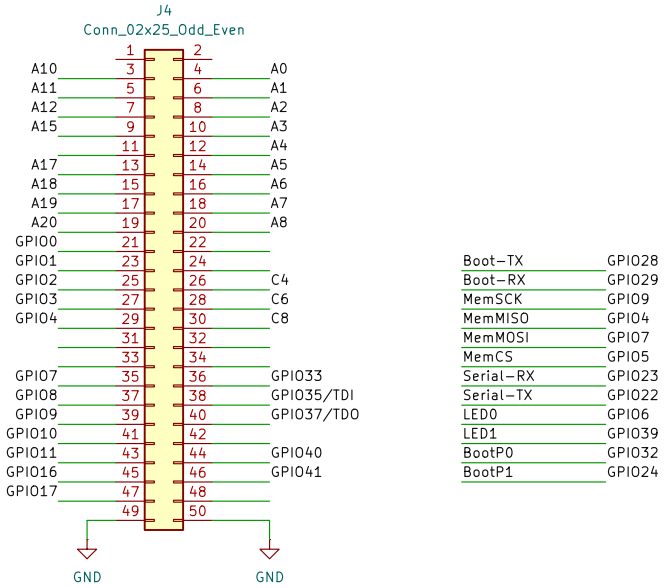

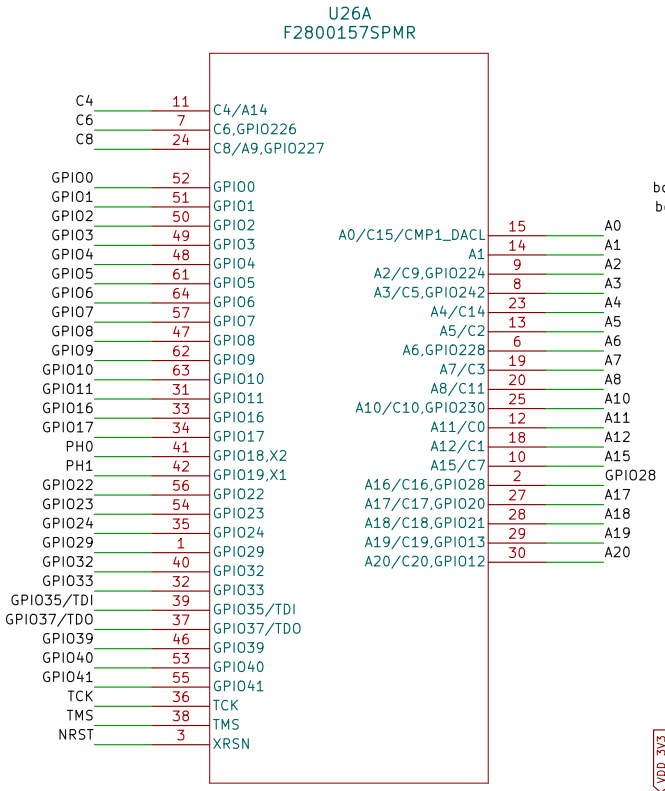

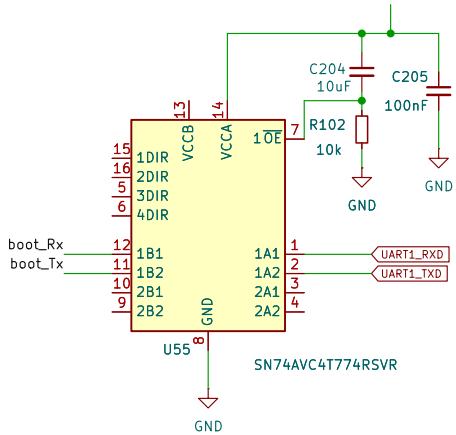

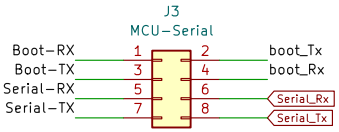

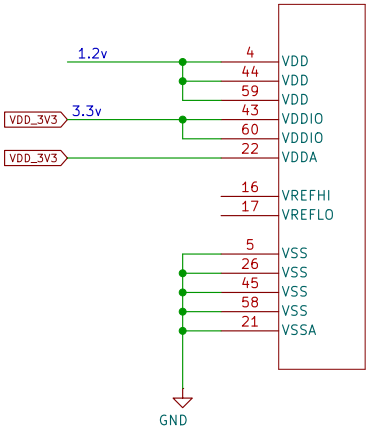

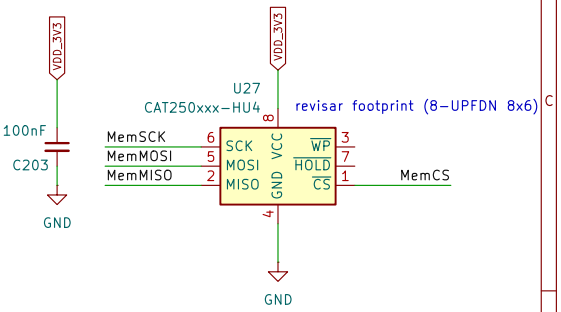

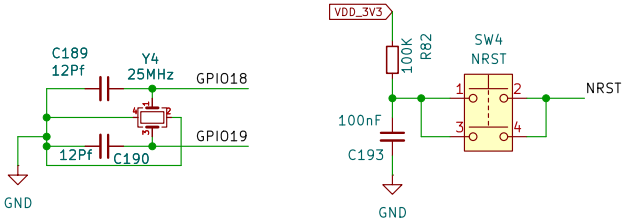

Sheet: /MCU/
File: microcontroller.kicad_sch

Title:

Size: A4	Date:	Rev:
KiCad E.D.A. 10.0.0		Id: 8/19

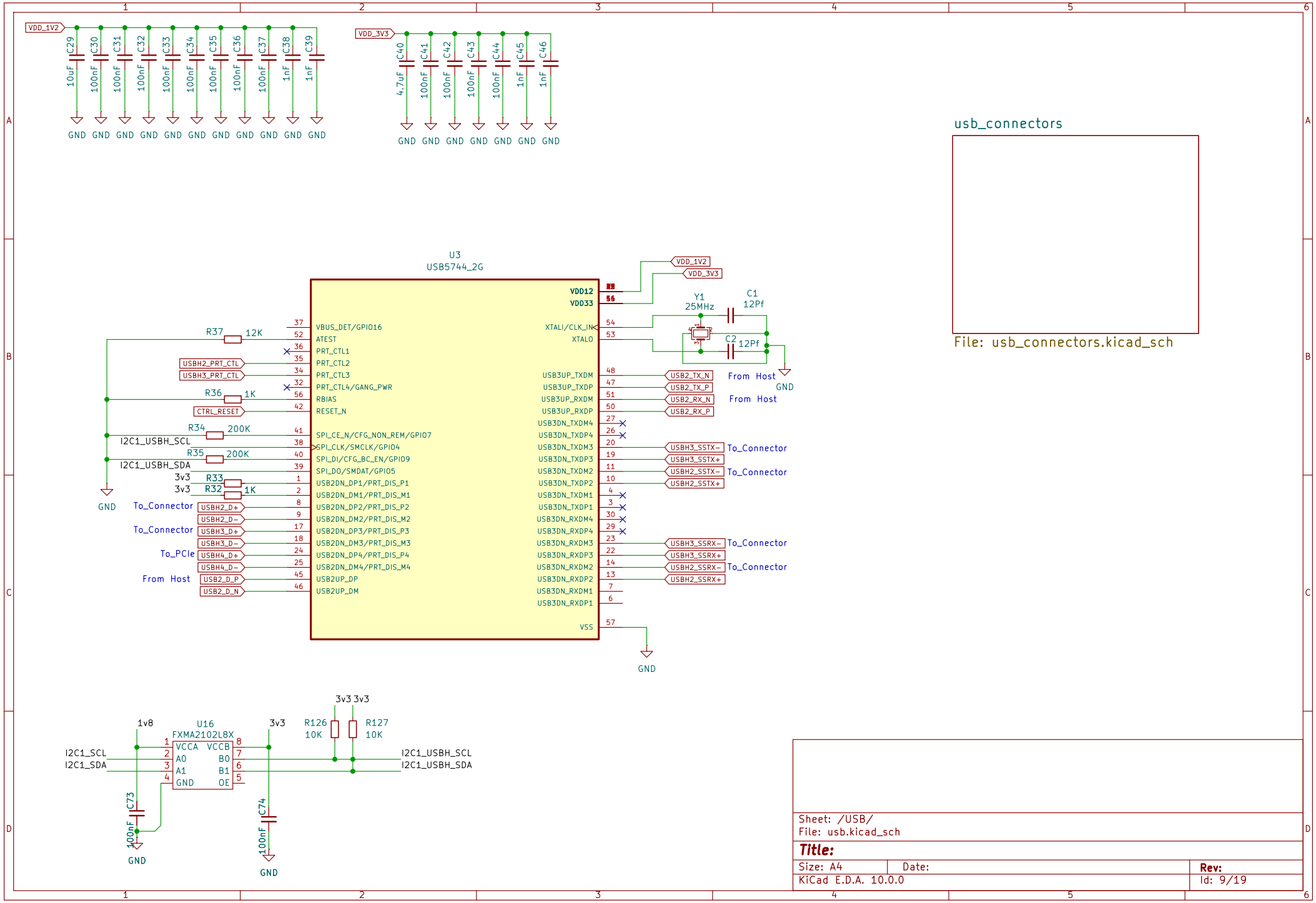
VDD_1V2
C29 10uF
C30 100nF
C31 100nF
C32 100nF
C33 100nF
C34 100nF
C35 100nF
C36 100nF
C37 100nF
C38 1nF
C39 1nF
GND
VDD_3V3
C40 4.7uF
C41 100nF
C42 100nF
C43 100nF
C44 100nF
C45 1nF
C46 1nF
usb_connectors
File: usb_connectors.kicad_sch
U3
USB5744_2G
VDD12
VDD33
XTALI/CLK_IN
XTALO
Y1
25MHz
C1
12Pf
C2
12Pf
VBUS_DET/GPIO16
ATEST
PRT_CTL1
PRT_CTL2
PRT_CTL3
PRT_CTL4/GANG_PWR
RBIAS
RESET_N
SPI_CE_N/CFG_NON_REM/GPIO7
SPI_CLK/SMCLK/GPIO4
SPI_DI/CFG_BC_EN/GPIO9
SPI_DO/SMDAT/GPIO5
USB2DN_DP1/PRT_DIS_P1
USB2DN_DM1/PRT_DIS_M1
USB2DN_DP2/PRT_DIS_P2
USB2DN_DM2/PRT_DIS_M2
USB2DN_DP3/PRT_DIS_P3
USB2DN_DM3/PRT_DIS_M3
USB2DN_DP4/PRT_DIS_P4
USB2DN_DM4/PRT_DIS_M4
USB2UP_DP
USB2UP_DM
USB3UP_TXDM
USB3UP_TXDP
USB3UP_RXDM
USB3UP_RXDP
USB3DN_TXDM4
USB3DN_TXDP4
USB3DN_TXDM3
USB3DN_TXDP3
USB3DN_TXDM2
USB3DN_TXDP2
USB3DN_TXDM1
USB3DN_TXDP1
USB3DN_RXDM4
USB3DN_RXDP4
USB3DN_RXDM3
USB3DN_RXDP3
USB3DN_RXDM2
USB3DN_RXDP2
USB3DN_RXDM1
USB3DN_RXDP1
VSS
R37 12K
USBH2_PRT_CTL
USBH3_PRT_CTL
R36 1K
CTRL_RESET
R34 200K
I2C1_USBH_SCL
R35 200K
I2C1_USBH_SDA
3v3
R33
R32 1K
To_Connector
USBH2_D+
USBH2_D−
To_Connector
USBH3_D+
USBH3_D−
To_PCIe
USBH4_D+
USBH4_D−
From Host
USB2_D_P
USB2_D_N
USB2_TX_N
USB2_TX_P
From Host
USB2_RX_N
USB2_RX_P
From Host
USBH3_SSTX−
USBH3_SSTX+
To_Connector
USBH2_SSTX−
USBH2_SSTX+
To_Connector
USBH3_SSRX−
USBH3_SSRX+
To_Connector
USBH2_SSRX−
USBH2_SSRX+
To_Connector
1v8
U16
FXMA2102L8X
VCCA
A0
A1
GND
VCCB
B0
B1
OE
I2C1_SCL
I2C1_SDA
3v3
R126 10K
R127 10K
I2C1_USBH_SCL
I2C1_USBH_SDA
C73 100nF
C74 100nF
Sheet: /USB/
File: usb.kicad_sch
Title:
Size: A4
Date:
Rev:
KiCad E.D.A. 10.0.0
Id: 9/19

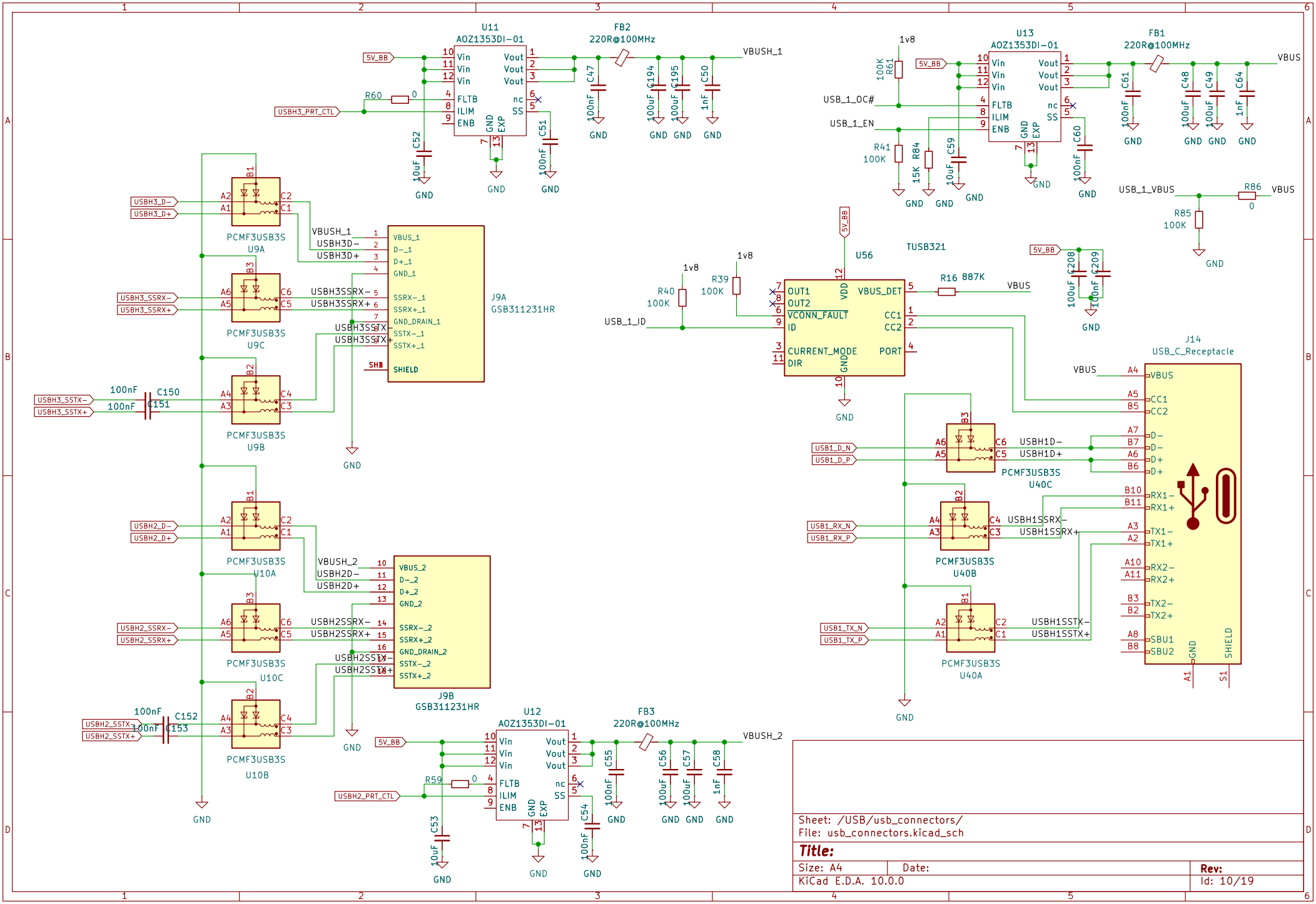
U11
AOZ1353DI-01
FB2
220R@100MHz
VBUSH_1
5V_BB
USBH3_PRT_CTL
R60
0
C52
10uF
C47
100nF
C194
100uF
C195
100uF
C50
1nF
C51
100nF
GND
U13
AOZ1353DI-01
FB1
220R@100MHz
VBUS
1v8
R61
100K
USB_1_OC#
USB_1_EN
R41
100K
R84
15K
C59
10uF
C60
100nF
C61
100nF
C48
100uF
C49
100uF
C64
1nF
USB_1_VBUS
R86
0
R85
100K
PCMF3USB3S
U9A
U9C
U9B
U10A
U10C
U10B
U40C
U40B
U40A
USBH3_D-
USBH3_D+
USBH3_SSRX-
USBH3_SSRX+
USBH3_SSTX-
USBH3_SSTX+
USBH2_D-
USBH2_D+
USBH2_SSRX-
USBH2_SSRX+
USBH2_SSTX-
USBH2_SSTX+
USB1_D_N
USB1_D_P
USB1_RX_N
USB1_RX_P
USB1_TX_N
USB1_TX_P
VBUSH_1
USBH3D-
USBH3D+
USBH3SSRX-
USBH3SSRX+
USBH3SSTX-
USBH3SSTX+
VBUSH_2
USBH2D-
USBH2D+
USBH2SSRX-
USBH2SSRX+
USBH2SSTX-
USBH2SSTX+
USBH1D-
USBH1D+
USBH1SSRX-
USBH1SSRX+
USBH1SSTX-
USBH1SSTX+
100nF
C150
C151
C152
C153
J9A
GSB311231HR
J9B
GSB311231HR
VBUS_1
D-_1
D+_1
GND_1
SSRX-_1
SSRX+_1
GND_DRAIN_1
SSTX-_1
SSTX+_1
SHIELD
VBUS_2
D-_2
D+_2
GND_2
SSRX-_2
SSRX+_2
GND_DRAIN_2
SSTX-_2
SSTX+_2
U12
AOZ1353DI-01
FB3
220R@100MHz
VBUSH_2
R59
0
USBH2_PRT_CTL
C53
10uF
C54
100nF
C55
100nF
C56
100uF
C57
100uF
C58
1nF
U56
TUSB321
5V_BB
1v8
R40
100K
R39
100K
USB_1_ID
OUT1
OUT2
VCONN_FAULT
ID
CURRENT_MODE
DIR
VDD
VBUS_DET
CC1
CC2
PORT
GND
R16
887K
VBUS
C208
100uF
C209
100nF
J14
USB_C_Receptacle
VBUS
CC1
CC2
D-
D+
RX1-
RX1+
TX1-
TX1+
RX2-
RX2+
TX2-
TX2+
SBU1
SBU2
GND
SHIELD
A1
S1
Sheet: /USB/usb_connectors/
File: usb_connectors.kicad_sch
Title:
Size: A4
Date:
Rev:
KiCad E.D.A. 10.0.0
Id: 10/19

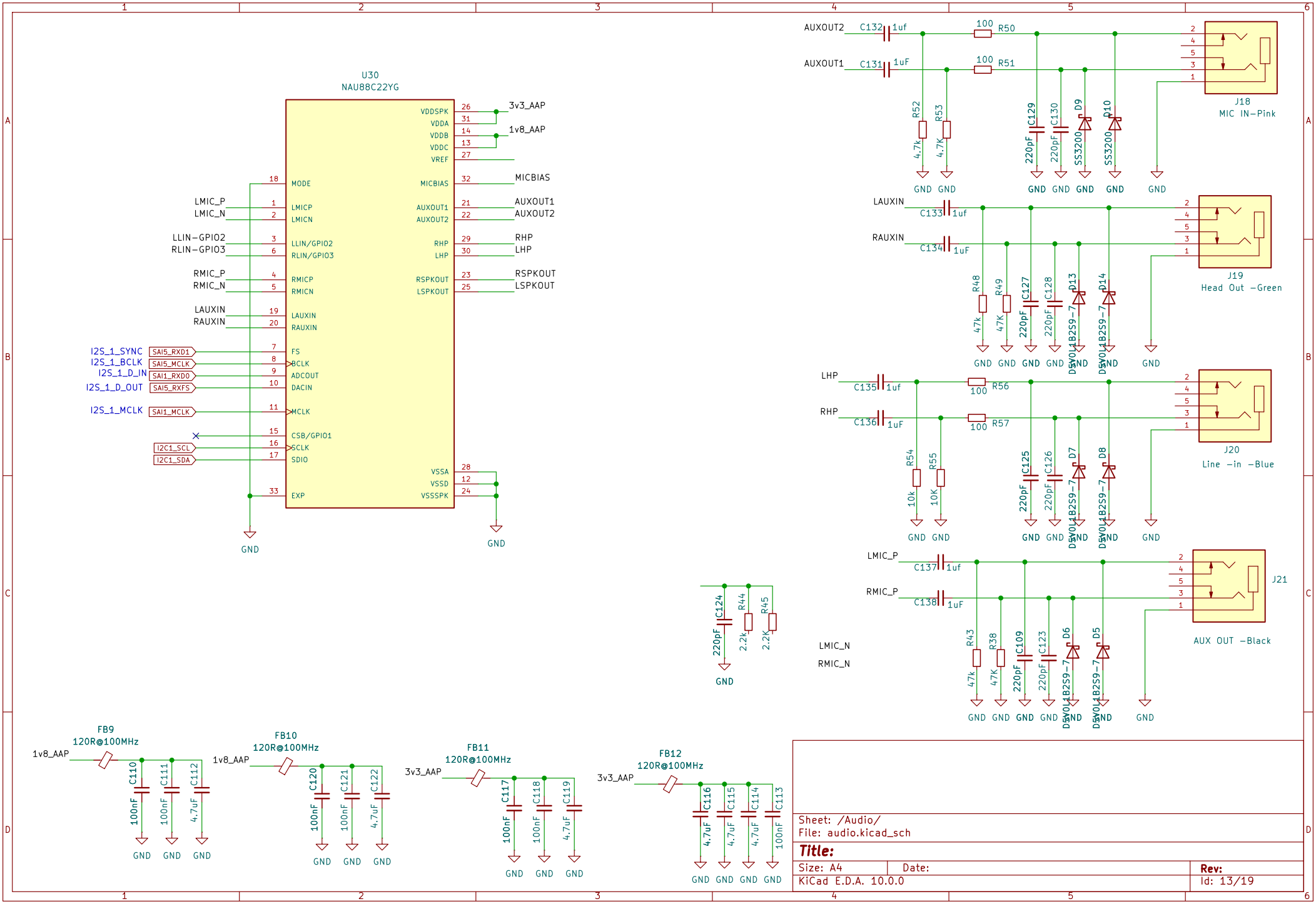
U30
NAU88C22YG
VDDSPK
VDDA
VDDB
VDDC
VREF
MICBIAS
AUXOUT1
AUXOUT2
RHP
LHP
RSPKOUT
LSPKOUT
MODE
LMICP
LMICN
LLIN/GPIO2
RLIN/GPIO3
RMICP
RMICN
LAUXIN
RAUXIN
FS
BCLK
ADCOUT
DACIN
MCLK
CSB/GPIO1
SCLK
SDIO
EXP
VSSA
VSSD
VSSSPK
3v3_AAP
1v8_AAP
MICBIAS
AUXOUT1
AUXOUT2
RHP
LHP
RSPKOUT
LSPKOUT
LMIC_P
LMIC_N
LLIN-GPIO2
RLIN-GPIO3
RMIC_P
RMIC_N
LAUXIN
RAUXIN
I2S_1_SYNC
I2S_1_BCLK
I2S_1_D_IN
I2S_1_D_OUT
I2S_1_MCLK
SAI5_RXD1
SAI5_MCLK
SAI1_RXD0
SAI5_RXFS
SAI1_MCLK
I2C1_SCL
I2C1_SDA
GND
AUXOUT2
AUXOUT1
C132 1uf
C131 1uF
R50 100
R51 100
R52 4.7k
R53 4.7K
C129 220pF
C130 220pF
D9 SS3200
D10 SS3200
J18
MIC IN-Pink
LAUXIN
RAUXIN
C133 1uf
C134 1uF
R48 47k
R49 47K
C127 220pF
C128 220pF
D13 DSV01B2S9-7
D14 DSV01B2S9-7
J19
Head Out -Green
LHP
RHP
C135 1uf
C136 1uF
R56 100
R57 100
R54 10k
R55 10K
C125 220pF
C126 220pF
D7 DSV01B2S9-7
D8 DSV01B2S9-7
J20
Line -in -Blue
LMIC_P
RMIC_P
C137 1uf
C138 1uF
R43 47k
R38 47K
C109 220pF
C123 220pF
D6 DSV01B2S9-7
D5 DSV01B2S9-7
J21
AUX OUT -Black
LMIC_N
RMIC_N
C124 220pF
R44 2.2k
R45 2.2K
FB9
120R@100MHz
1v8_AAP
C110 100nF
C111 100nF
C112 4.7uF
FB10
120R@100MHz
1v8_AAP
C120 100nF
C121 100nF
C122 4.7uF
FB11
120R@100MHz
3v3_AAP
C117 100nF
C118 100nF
C119 4.7uF
FB12
120R@100MHz
3v3_AAP
C116 4.7uF
C115 4.7uF
C114 4.7uF
C113 100nF
Sheet: /Audio/
File: audio.kicad_sch
Title:
Size: A4
Date:
Rev:
KiCad E.D.A. 10.0.0
Id: 13/19

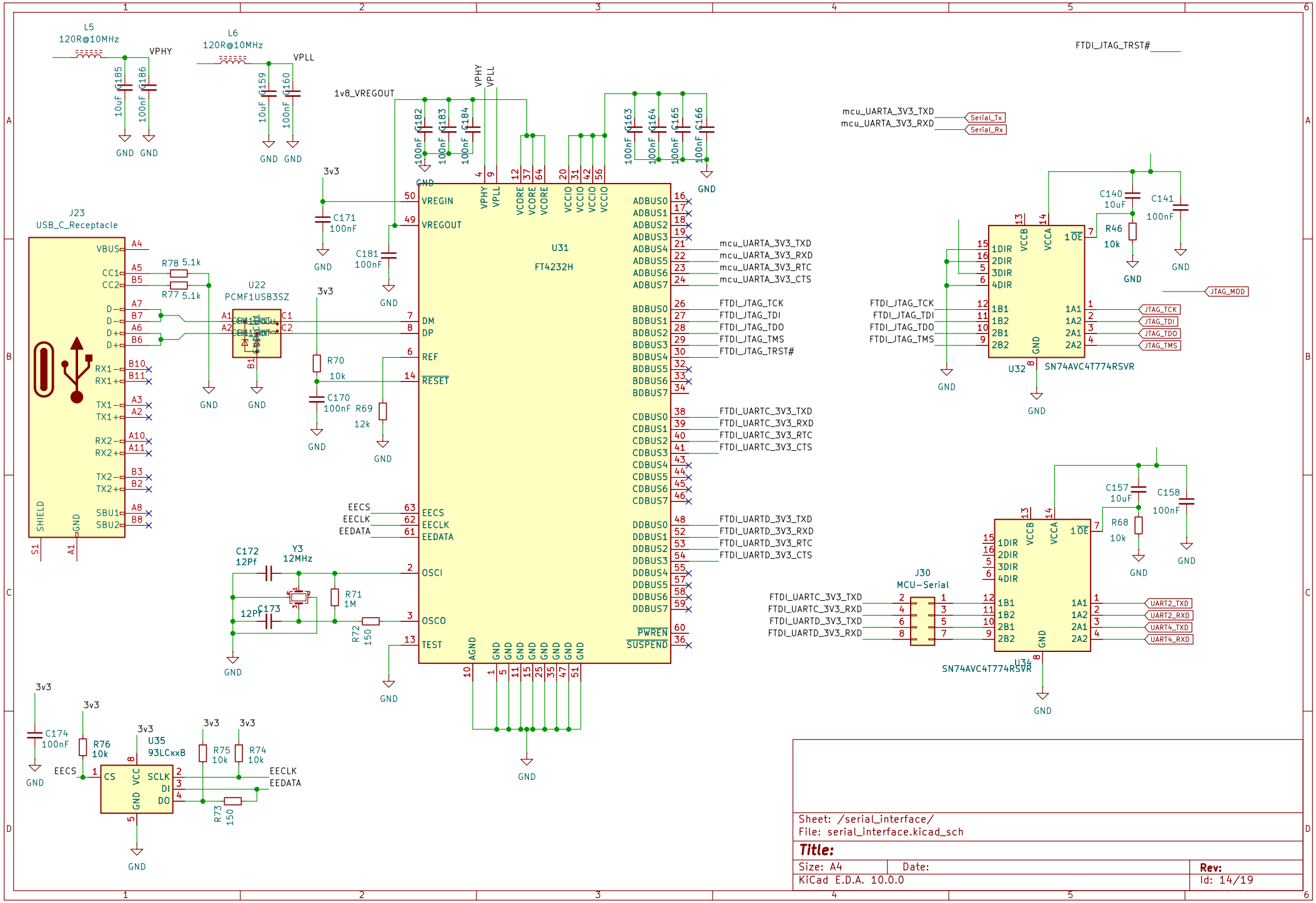

Sheet: /serial_interface/
File: serial_interface.kicad_sch

Title:

Size: A4	Date:	Rev:
KiCad E.D.A. 10.0.0		Id: 14/19

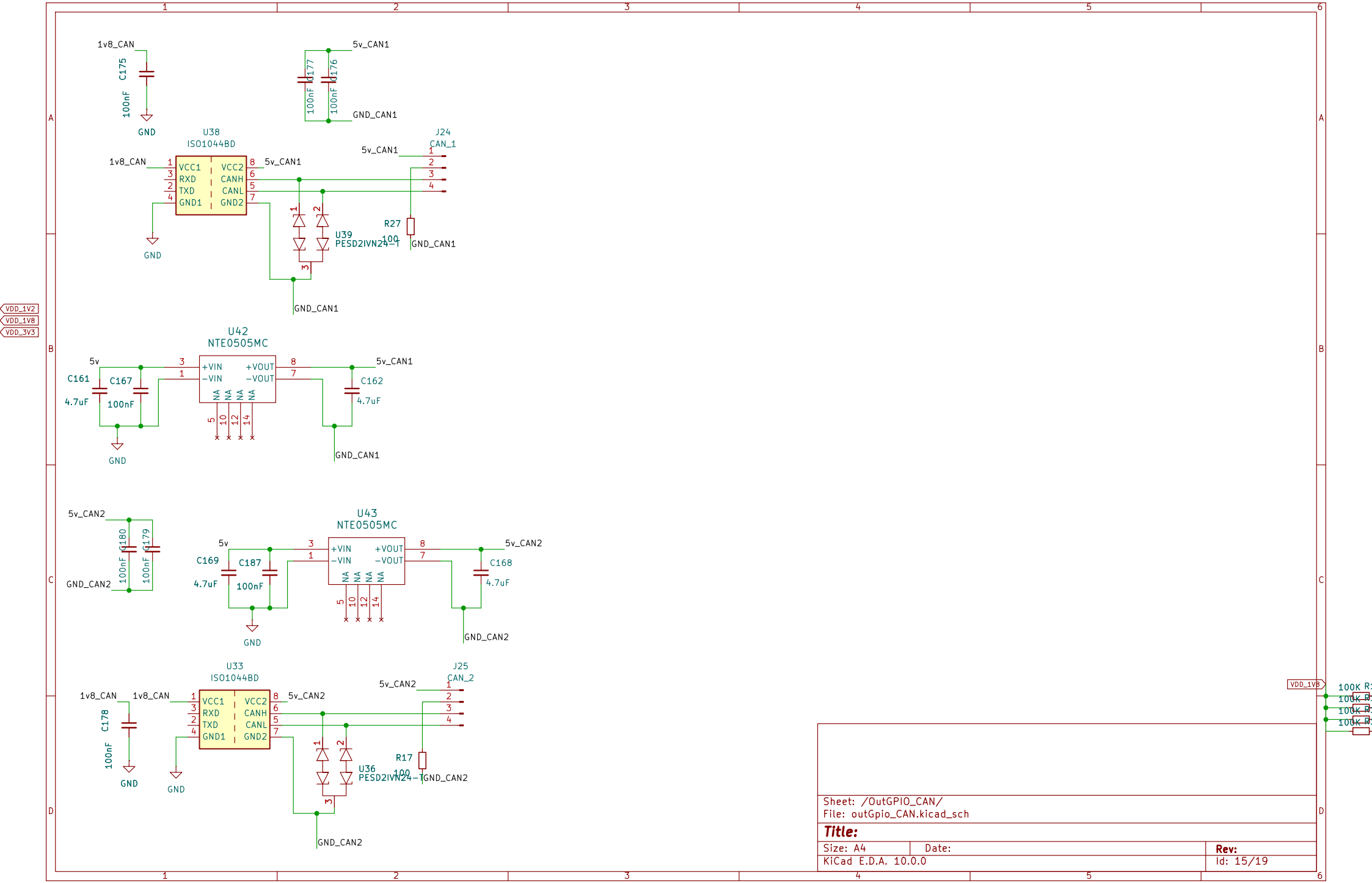
1v8_CAN
C175
100nF
GND
5v_CAN1
C177
C176
100nF
GND_CAN1
U38
ISO1044BD
VCC1
RXD
TXD
GND1
VCC2
CANH
CANL
GND2
J24
CAN_1
R27
100
U39
PESD2IVN24-T
VDD_1V2
VDD_1V8
VDD_3V3
U42
NTE0505MC
+VIN
-VIN
+VOUT
-VOUT
5v
C161
C167
4.7uF
100nF
C162
U43
NTE0505MC
5v_CAN2
C180
C179
GND_CAN2
C169
C187
C168
U33
ISO1044BD
J25
CAN_2
C178
R17
U36
PESD2IVN24-T
VDD_1V8
100K R:
Sheet: /OutGPIO_CAN/
File: outGpio_CAN.kicad_sch
Title:
Size: A4
Date:
Rev:
KiCad E.D.A. 10.0.0
Id: 15/19