Drawings for Final Design

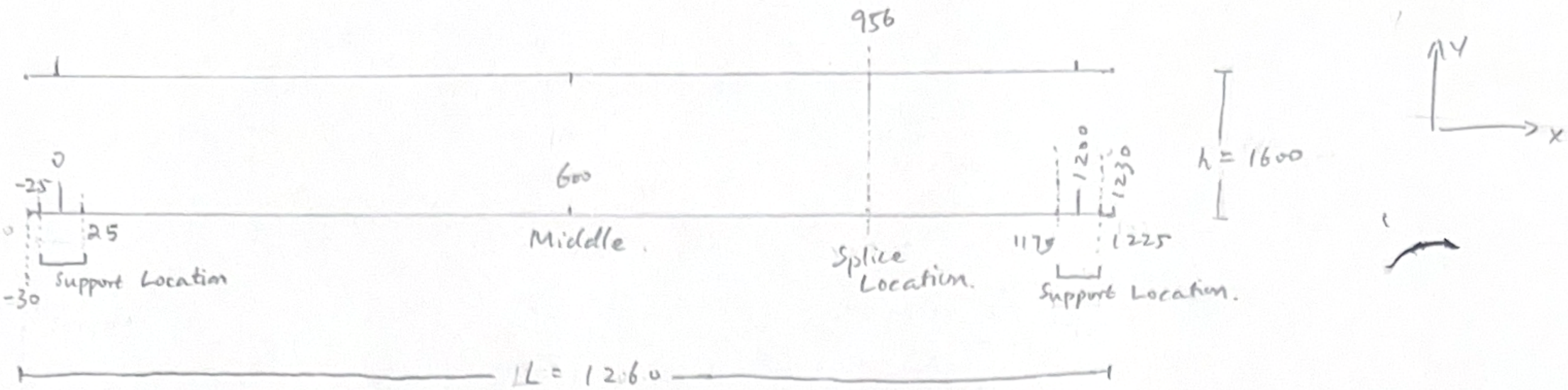

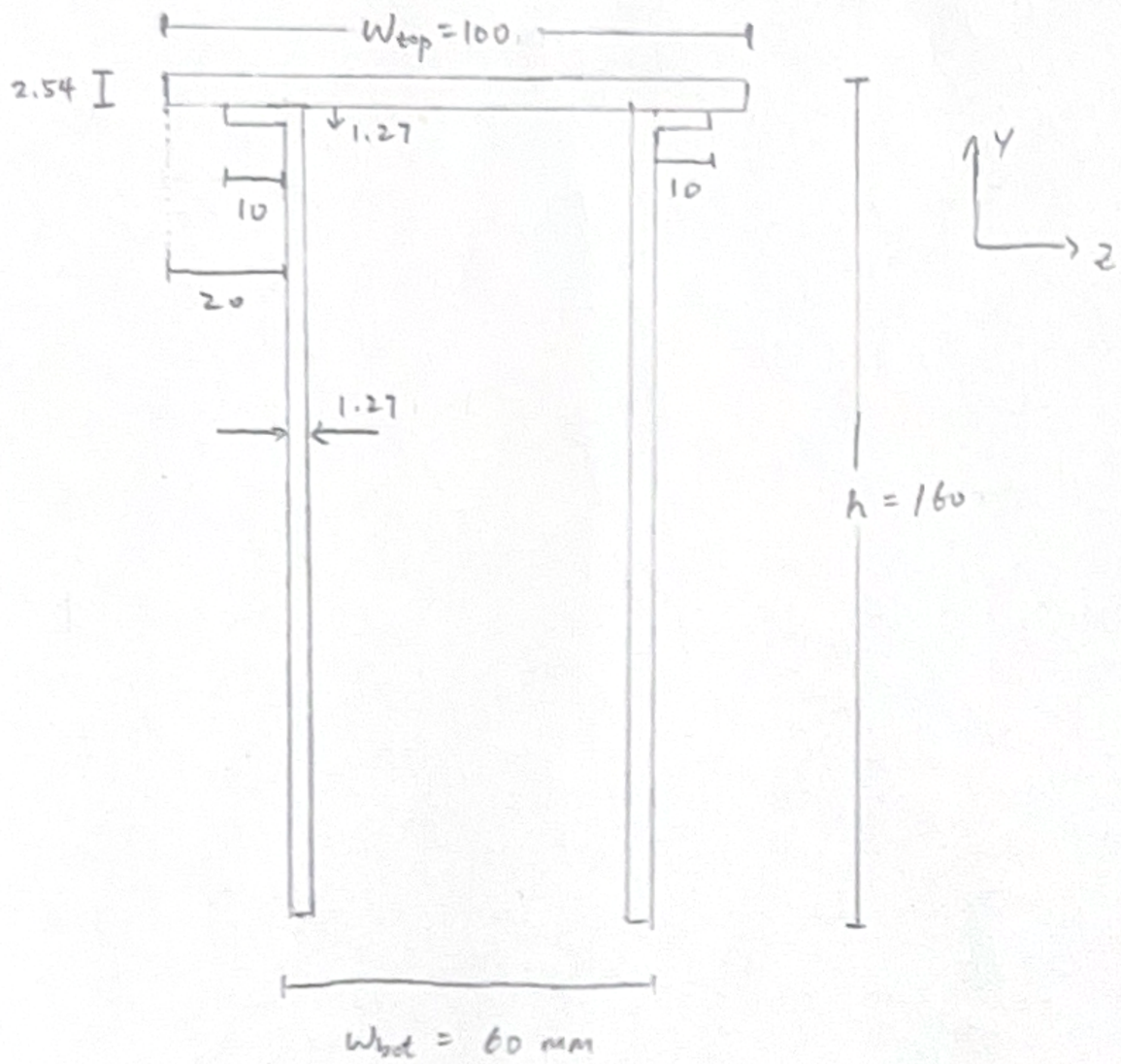

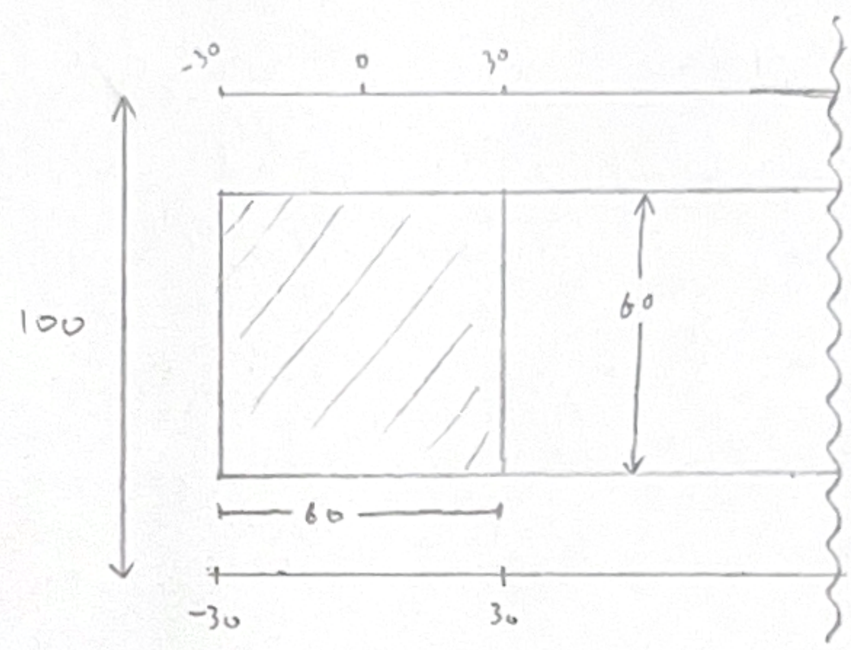
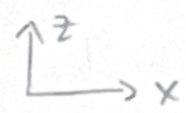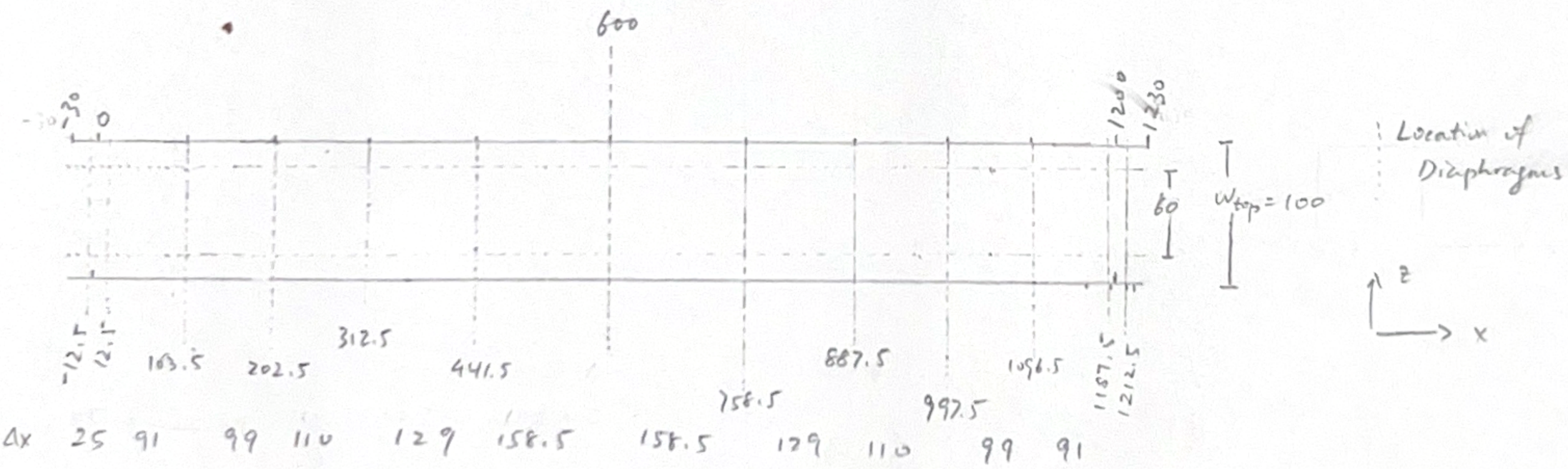
Bottom View:
Shaded: Additional Area on bottom for support to rest on.