Process Analysis: CTMF-Driven Reflection on Team-Based Design

Word Count: 997

William Xu

November 8, 2025

I. Introduction: Reflection as a Design Mechanism, Not a Postscript

In this analysis, two observations from my Praxis project are examined to understand how **Kolb's Experiential Learning Cycle** and the **FDCR Model** have changed my understanding of the engineering design process. Firstly, complications with the Overleaf Latex software demonstrated how lack of reflection restricts collaboration and learning requires investment. Secondly, when experiments disproved our initial hypothesis, my group learned to utilize FDCR to iterate our framing. Together, these CTMFs developed my understanding of reflection as mechanisms for improving design thinking.

II. Observation 1 – Collaboration Challenges When Using Overleaf

What: My team chose to use the Overleaf software for its LaTeX formatting, even though half of the members were unfamiliar with the software, and the free version only allowed two concurrent editors. We initially agreed that all drafts would be completed in Google Docs and merged at the end. However, as the deadline approached, Shu and I rushed to merge all the content. Resulting in many lost edits, overwritten work, and uneven participation from all members in the design brief (Figures 1–4). This revealed that we prioritized finishing quickly over learning as a group.

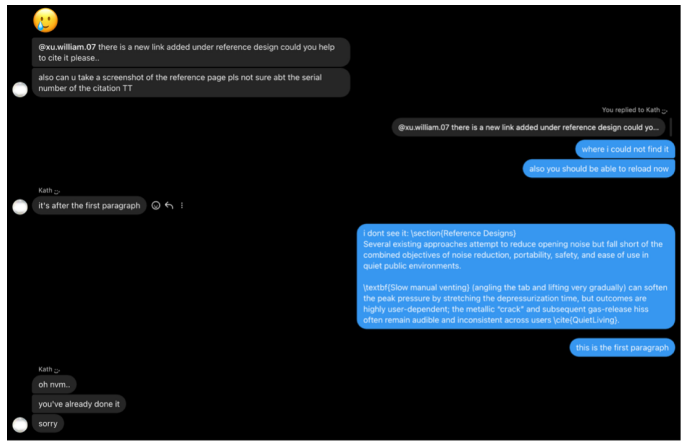

Figure 1: Manual process used to merge Google Docs edits into Overleaf.

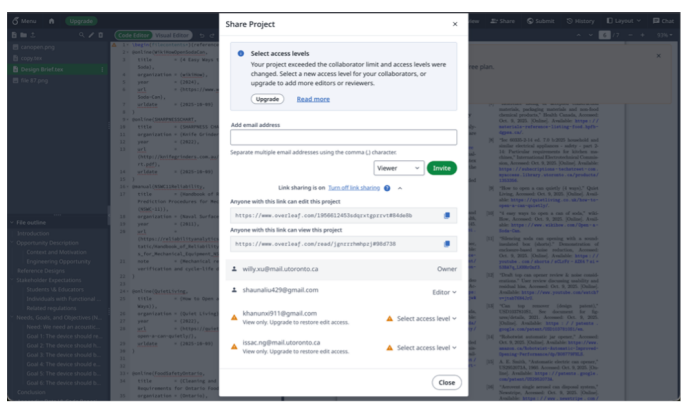

Figure 2: Overleaf free tier restricting simultaneous editing.

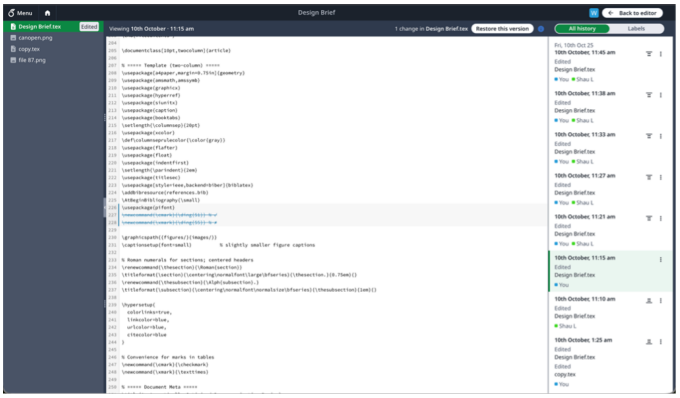

Figure 3: Edit history showing most changes from two editors.

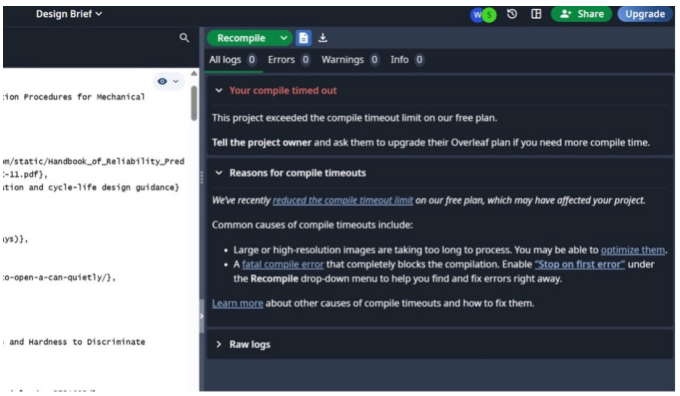

Figure 4: Timeouts and deletions that slowed progress.

III. Analysis 1 – Understanding Learning as Investment Through Kolb's Cycle

So What: Through this experience, I learned that my understanding of "efficiency" was incomplete. It seemed as if we valued speed over engagement; most edits came from two contributors (Figure 3), and the timeouts and lost work (Figure 4) reinforced this imbalance. By viewing this experience through the lens of **Kolb's Experiential Learning Cycle**, I realized that we had skipped the *Reflective Observation* and *Abstract Conceptualization* stages entirely. We were forcing the use of unfamiliar software under a strict deadline, acting without thought or examination of why our team felt so disjointed.

Through Kolb's model, I realized that in this case, we should have balanced *Active Experimentation* with *Reflective Observation* more effectively. While Overleaf's restrictions mirrored our own mindset, I learned that both personal and team reflection are investments in learning. It is important to pause and ask why things fail. The lost time and uneven workload we experienced serve as a reminder of what happens when the importance of reflection is ignored.

IV. Future Action 1 – Building Reflection into Design Practice

Now What: In future projects, I will embed short reflection checkpoints after key drafts to evaluate both the quality of the work and the effectiveness of the process. When setbacks occur, I will initiate brief discussions to identify their root causes before proceeding. Early drafts will remain in a shared workspace such as Google Docs, and only when all content is complete will a designated team member consolidate it in Overleaf to ensure both efficiency and inclusive participation. I will also apply Kolb's stages deliberately, linking each action with reflection so that it becomes a built-in habit of my engineering practice.

V. Observation 2 – Evidence vs. Assumptions: The Noise Source

What: Halfway through our Alpha Release, our group discovered that one of the most foundational assumptions of our underlying design (that the can's noise was caused by depressurization) was false. In reality, when we opened cans before and after venting, the dB levels remained constant (Figure 5). However, even after coming to this conclusion, when I tried to suggest pivoting and changing the scope of our design, my team resisted. We were stuck with a very narrow scope, struggling to diverge and develop solutions without altering its structure. The tension within the team (Figure 6) revealed that we were trapped in our original framing. Only after revisiting the evidence did we reframe the scope, increase the design space, and develop unique and innovative ideas for the splartz (Figure 7).

Figure 5: Vented vs. unvented trials: dB unchanged demonstrates how tearing dominates noise.

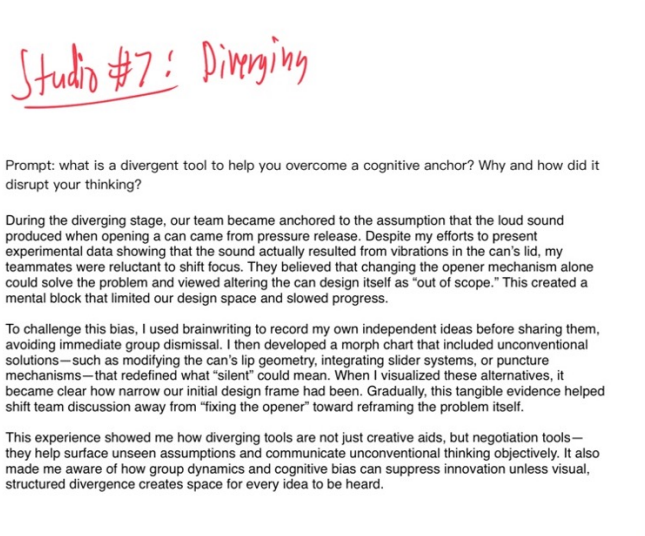

Studio #7: Diverging

Prompt: what is a divergent tool to help you overcome a cognitive anchor? Why and how did it disrupt your thinking?

During the diverging stage, our team became anchored to the assumption that the loud sound produced when opening a can came from pressure release. Despite my efforts to present experimental data showing that the sound actually resulted from vibrations in the can's lid, my teammates were reluctant to shift focus. They believed that changing the opener mechanism alone could solve the problem and viewed altering the can design itself as "out of scope." This created a mental block that limited our design space and slowed progress.

To challenge this bias, I used brainwriting to record my own independent ideas before sharing them, avoiding immediate group dismissal. I then developed a morph chart that included unconventional solutions—such as modifying the can's lip geometry, integrating slider systems, or puncture mechanisms—that redefined what "silent" could mean. When I visualized these alternatives, it became clear how narrow our initial design frame had been. Gradually, this tangible evidence helped shift team discussion away from "fixing the opener" toward reframing the problem itself.

This experience showed me how diverging tools are not just creative aids, but negotiation tools—they help surface unseen assumptions and communicate unconventional thinking objectively. It also made me aware of how group dynamics and cognitive bias can suppress innovation unless visual, structured divergence creates space for every idea to be heard.

Figure 6: Studio reflection showing frustration with team reluctance to revisit assumptions.

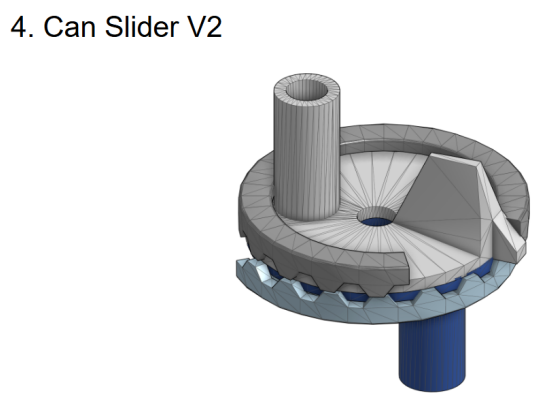

Figure 7: Post-pivot concept: rotating valve lid developed after reframing the problem.

VI. Analysis 2 – Learning to Reframe Through FDCR

So What: Our experimentation (Figure 5) demonstrated that the can's noise came from metal tearing rather than depressurization. Yet, our team continued to refine and alter the existing designs, revealing how we were trapped in a single *frame*, our original problem definition. Through this experience, we learned that the **FDCR Model** frames iteration as movement not only forward but also backward through its stages. We realized that the *Diverging* and *Converging* stages only hold meaning if the *Framing* remains valid; once evidence challenges it, true progress requires returning back to *Framing* before venturing forwards.

Figure 6 captured our reluctance to adapt, revealing how easily engineers can become attached to their initial frames. From this, we learned through the **FDCR Model** that iteration functions as a loop sustained by evidence-driven feedback. Ignoring that feedback risks wasting significant energy converging on a polished but misguided solution. Our eventual pivot towards ideas such as a rotating valve lid (Figure 7) marked the moment we re-entered *Framing* correctly, this time guided by data rather than attachment.

This experience reshaped my understanding of iteration as a cognitive rather than mechanical process. FDCR taught me that *Framing* is never complete; it must evolve with new information. I learned that evidence should redefine what we aim to solve. Persistence no longer means defending an idea but committing to the process of learning, allowing evidence, reflection, and communication to reshape the frame as needed.

VII. Future Action 2 – Practicing Multi-Frame Thinking and Traceable Reframing

Now What: I plan to practice "multi-frame thinking," where two or more plausible frames are developed in parallel before convergence. This approach will help reduce the emotional resistance that arises from overcommitting to a single idea too early. I will also encourage the team to treat documentation as part of the *Representing* stage, not only for communication but also for reflection, so that every decision and reframing step remains transparent and open to critique.

By applying FDCR in this way, I can ensure that our iterations remain intellectually flexible and evidence-driven. Rather than viewing mistakes as setbacks, I will treat them as indicators that the current frame has reached its limits, and that returning to *Framing* is not regression but progress toward more thoughtful and resilient design.

VIII. Conclusion – Integrating Reflection and Reframing into an Evolving Design Mindset

My comprehension of Kolb's learning model and FDCR has been updated as a result of this process, which involves theory, practice, and active reflection. I learned from Kolb's learning model that teams can function more effectively and efficiently when they reflect, and that learning is an investment. I learned from FDCR that iteration involves more than just correcting errors; it also entails reconsidering important presumptions when the evidence warrants it. These two CTMFs work together to create my new design mindset, which is based on learning, awareness, and adaptability. Going forward, I will approach each design as a technical challenge and a chance to improve my flexibility, teamwork, and way of thinking.