The Bifröst

2025 CIV102 Project Team 202: Engineering Assembly

William Xu, Michael (Mao) Li, Beckett Deschamps, Jeffrey Hu

Teaching Assistant: Jack Wong

Table of Contents

1.0 Engineering Drawings 3
1.1 Matboard Layout 3
1.2 Bridge Elevation 4
1.3 Bridge Cross-Section 4
1.4 Bottom View 5
1.5 Top View, Splicing and Diaphragm Locations 5
1.6 Bridge 3D Sketch 5
2.0 Construction Process 6
3.0 Time Log 10

1.0 Engineering Drawings

1.1 Matboard Layout

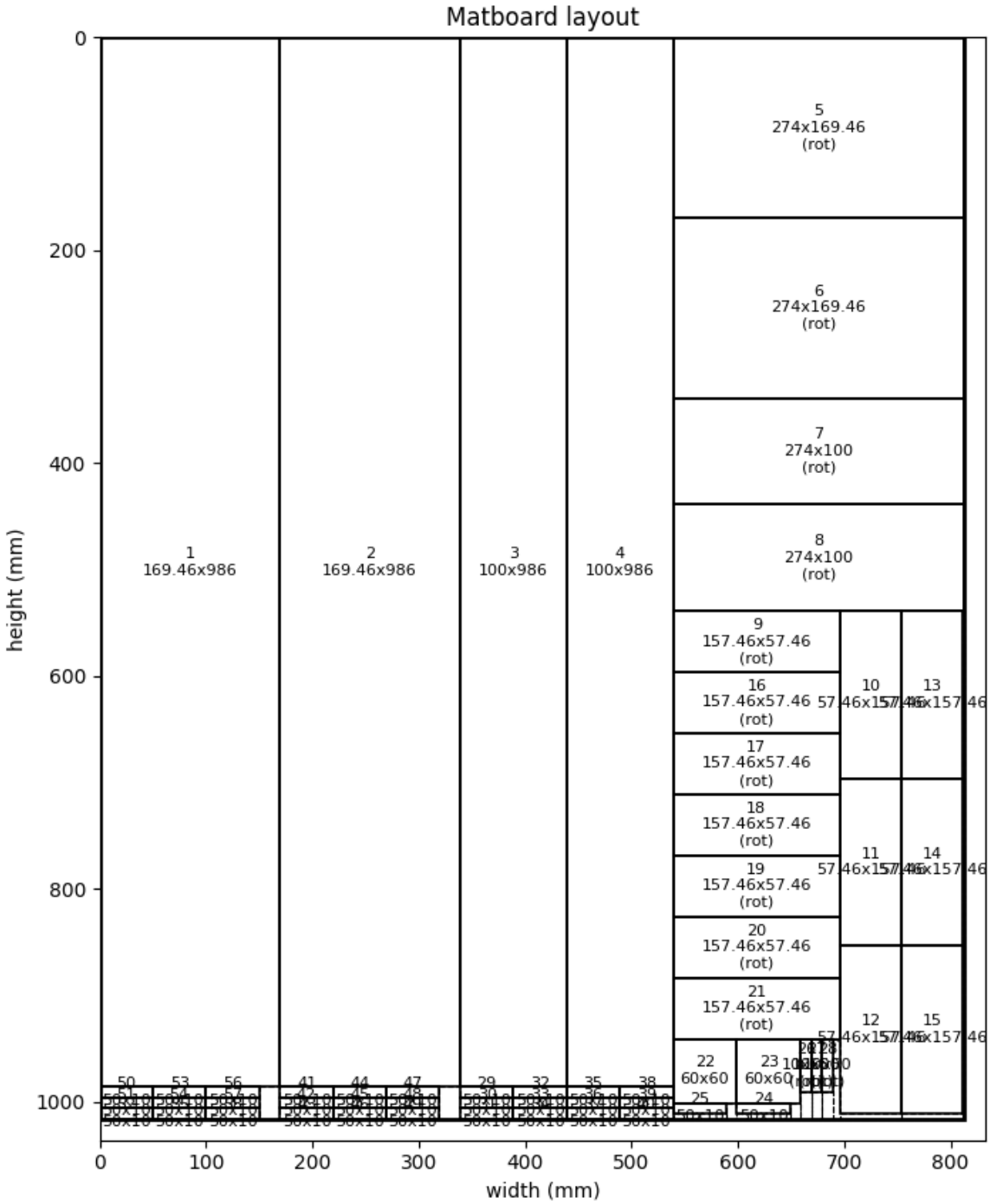

1.2 Bridge Elevation

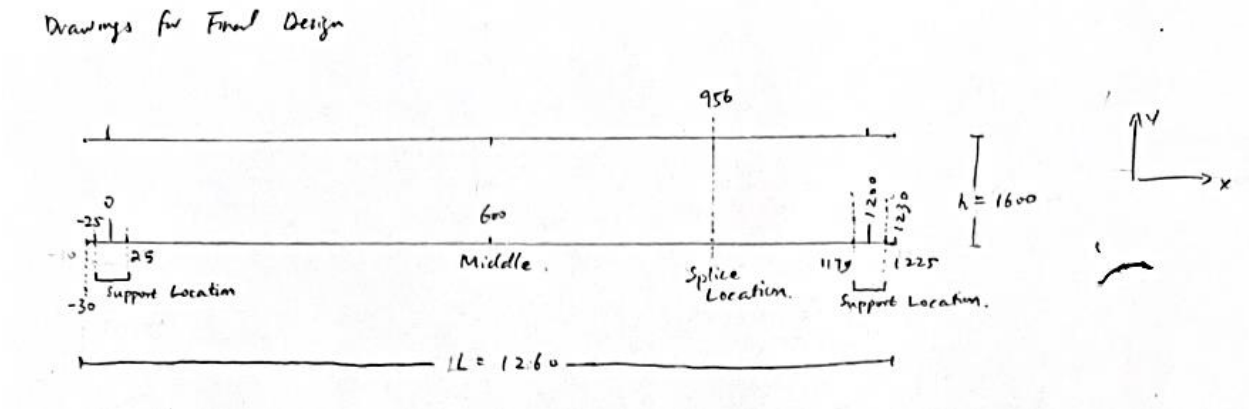

1.3 Bridge Cross-Section

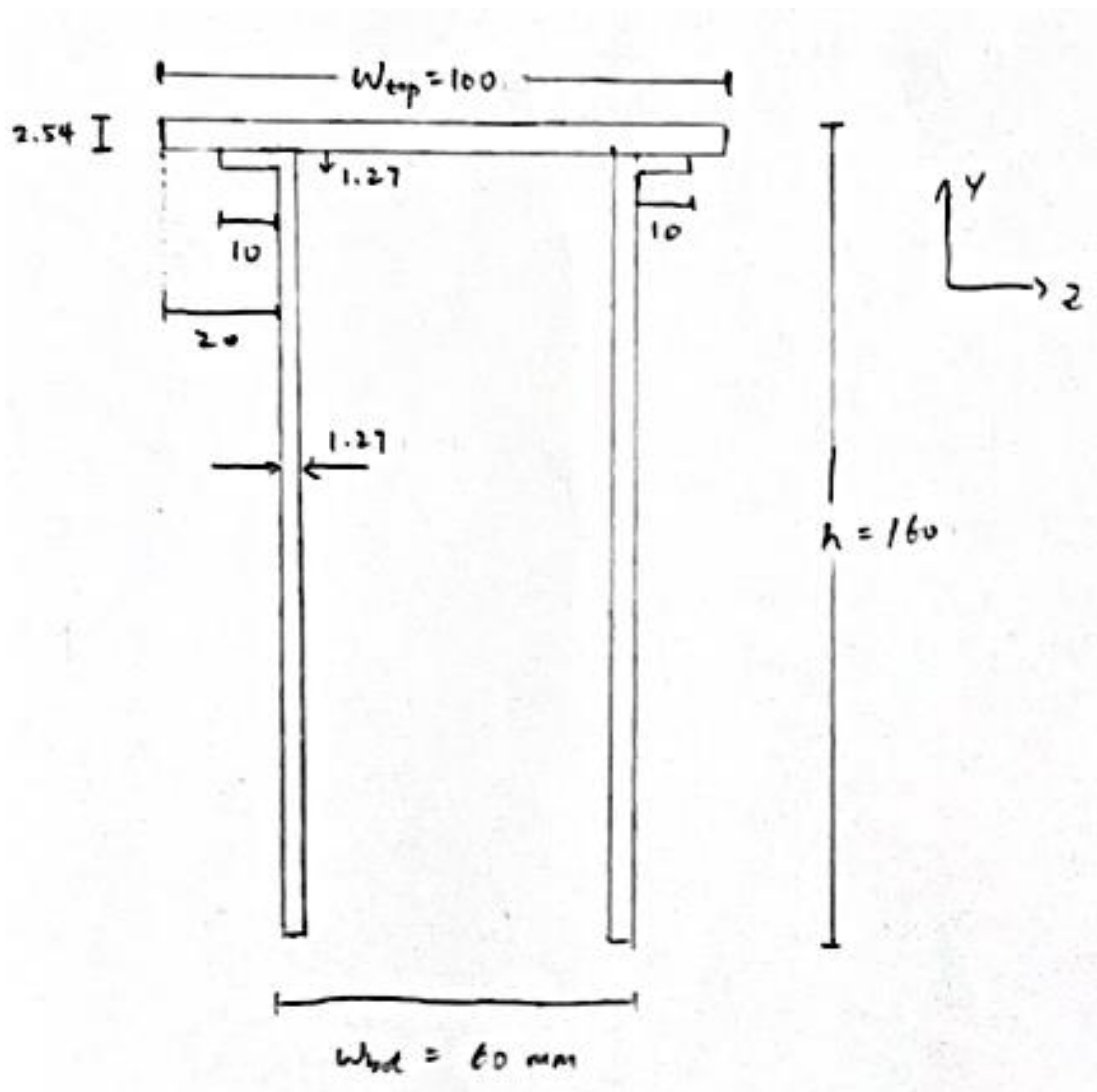

1.4 Bottom View

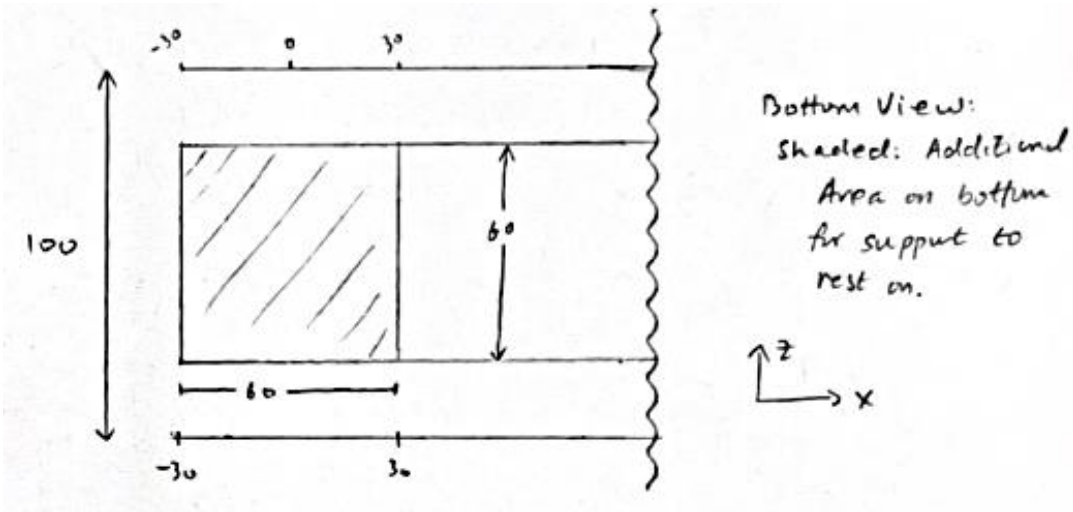

1.5 Top View, Splicing and Diaphragm Locations

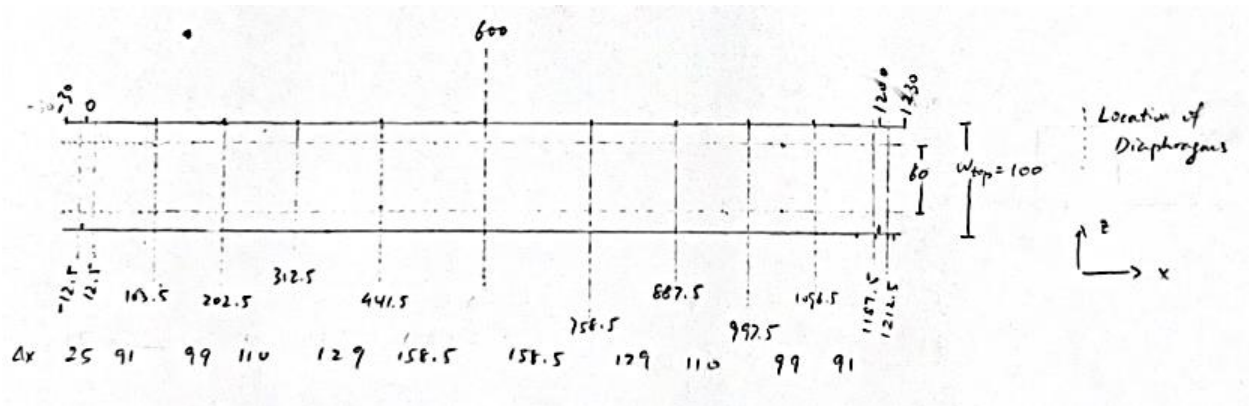

1.6 Bridge 3D Sketch

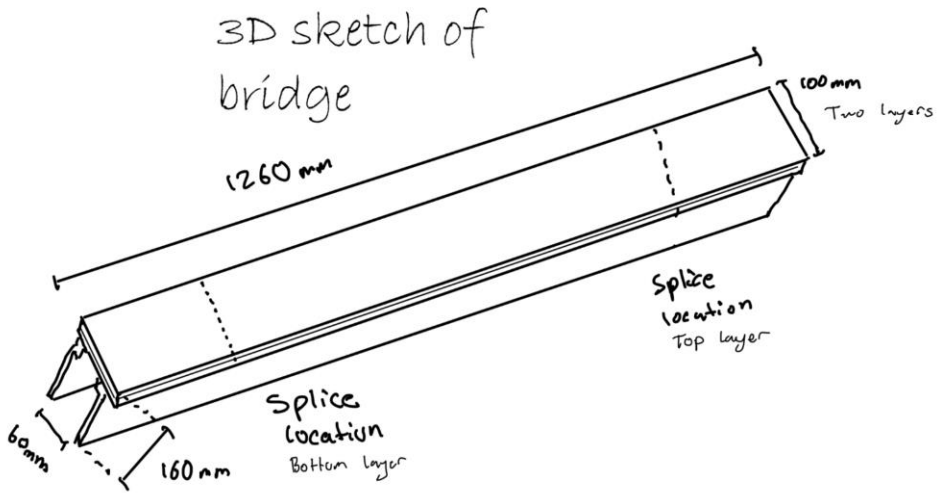

2.0 Construction Process

Figure 1: (2025-11-20 18:41) Our team was in the process of cutting the matboard with precision knives, with two layers of cardboard underneath to protect the wooden table underneath.

Figure 2: (2025-11-20 19:53) Our team in the process of numbering each matboard piece in correspondence with our matboard layout (generated by Python), ensuring proper placement of each key component.

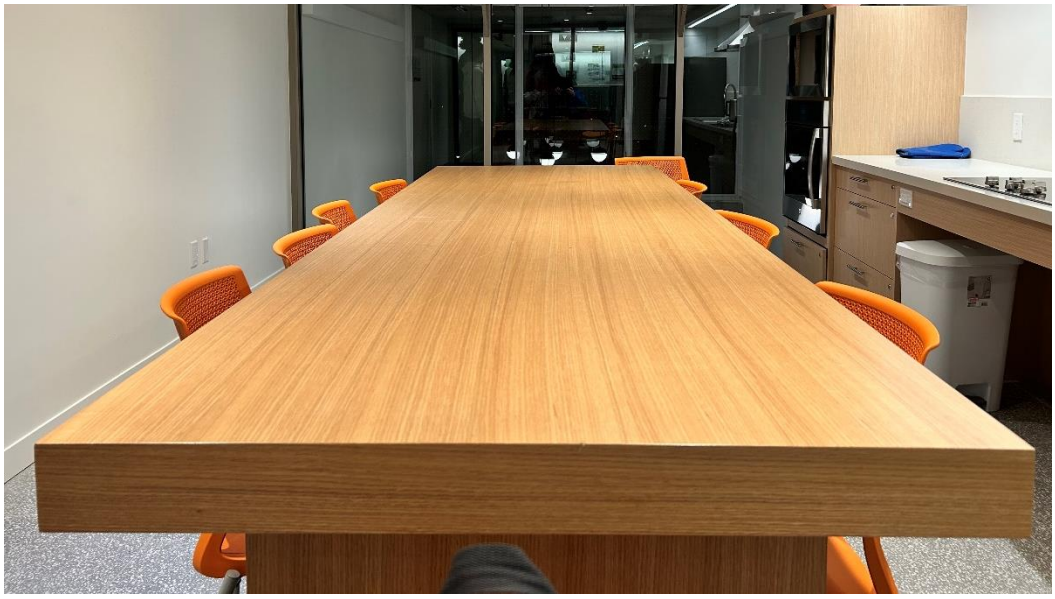

Figure 3: (2025-11-20 20:33) Workspace was completely cleaned and restored to its original condition.

Figure 4: (2025-11-21 14:06) Both webs have been glued securely to the top flange, with wooden planks secured with clamps and weights to apply continuous pressure. Garbage bags were taped to the table underneath the top flange to prevent glue from getting onto the table, and the remaining bridge components were glued directly onto the top flange.

Figure 5: (2025-11-21 16:15) Diaphragms were glued one by one between the two webs. Clamps applied direct pressure inwards, preventing the bridge segments from coming undone.

Figure 6: (2025-11-21 21:02) Workspace completely cleaned and restored to its original condition after the glueing session. Bridge was relocated to another project room, with clamps applying pressure overnight.

Figure 7: (2025-11-22 19:40) Our team in the process of painting our bridge to resemble the Bifrost rainbow bridge!

3.0 Time Log

Tasks	Date	William	Michael	Beckett	Jeffrey
Design Calculations					
Developing MATLAB/Python Simulation Code	Nov 13	4	1	1	4
Revising Code	Nov 16	3	1	1	2
Hand Calculations	Nov 17	1	3	1	1
Drawings					
Elevation/Sectional Views	Nov 18	0.5	1	1	0.5
Construction Plans	Nov 19	1	1	2	1
Construction					
Outlining/Cutting Matboard	Nov 20	2	2	2	2
Bridge Glueing	Nov 21	7	7	7	7
Painting	Nov 22	1	1	1	1
Report					
Summarizing Design Iterations	Nov 23	4	4	4	2
Summarize Construction Process	Nov 23	2	3	3	3
Total (Hours)		25.5	24	23	23.5

Signatures: *William Xu*

Michael Li

Beckett Deschamps

Jeffrey Hu