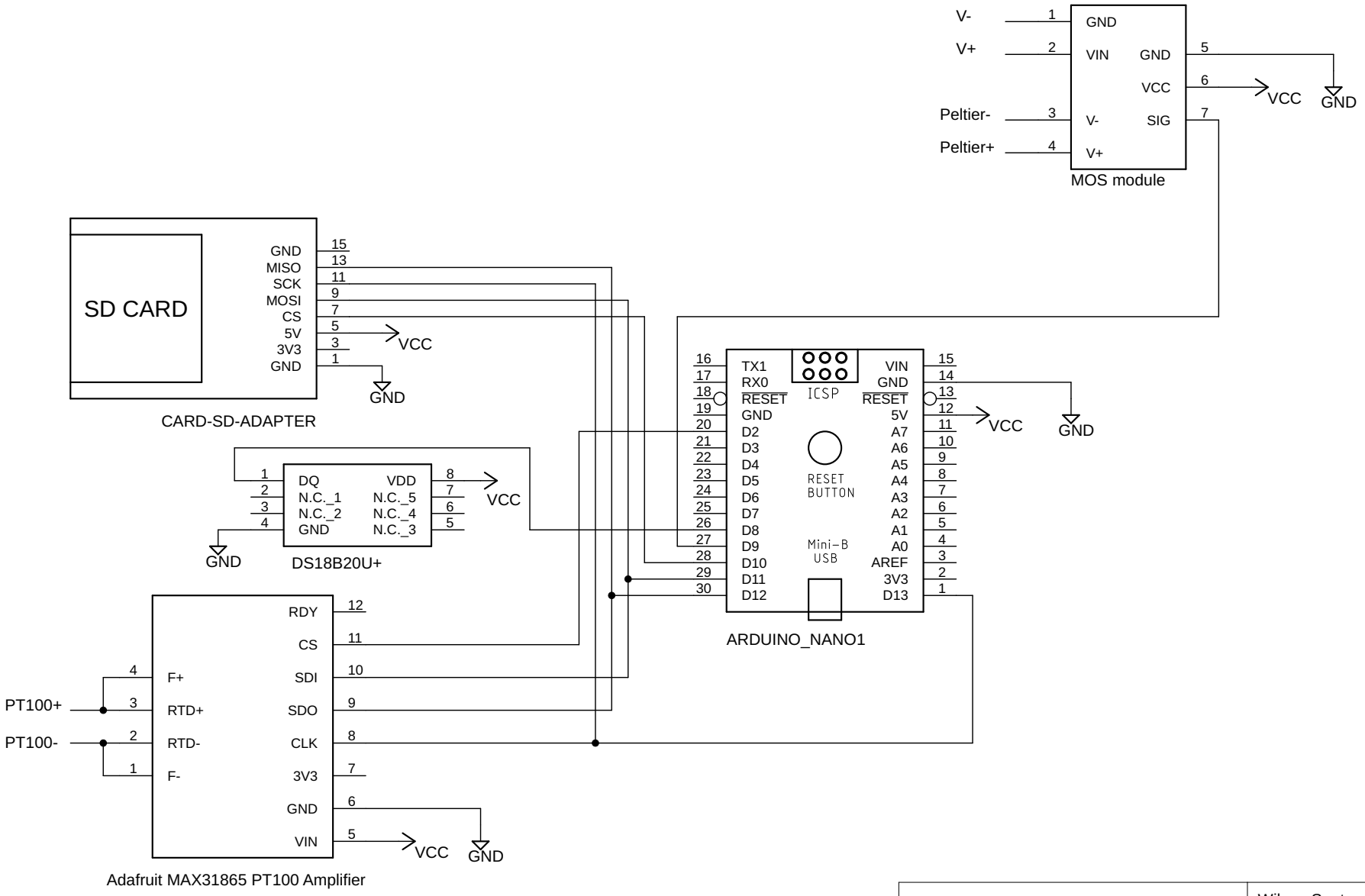

This heating controller is a system that implements a PID algorithm to stabilize the temperature at the desired value

Wilson Santos	
Temperature Control System v1.0.0	
20.09.2020 21:10	
Sheet: 1/1	