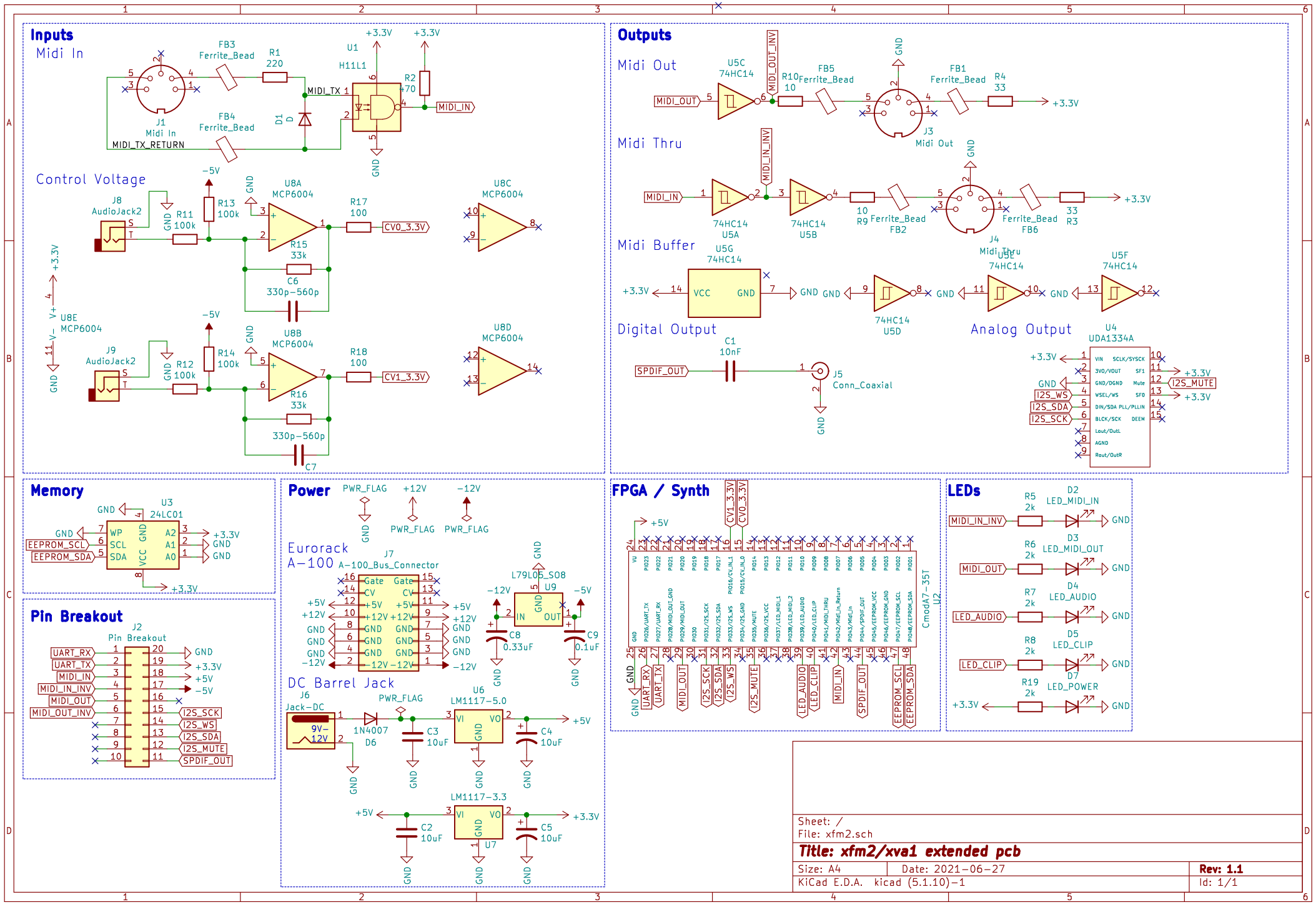
Inputs
Midi In
J1
Midi In
MIDI_TX_RETURN
FB3
Ferrite_Bead
FB4
Ferrite_Bead
R1
220
D1
D
U1
H11L1
+3.3V
R2
470
MIDI_TX
MIDI_IN
GND
Control Voltage
J8
AudioJack2
R11
100k
R13
100k
-5V
U8A
MCP6004
R15
33k
R17
100
CV0_3.3V
C6
330p-560p
U8C
MCP6004
U8E
MCP6004
J9
AudioJack2
R12
100k
R14
100k
U8B
MCP6004
R16
33k
R18
100
CV1_3.3V
330p-560p
C7
U8D
MCP6004
Outputs
Midi Out
U5C
74HC14
MIDI_OUT
MIDI_OUT_INV
R10
10
FB5
Ferrite_Bead
FB1
Ferrite_Bead
R4
33
J3
Midi Out
Midi Thru
MIDI_IN
MIDI_IN_INV
74HC14
U5A
74HC14
U5B
R9
10
FB2
Ferrite_Bead
FB6
Ferrite_Bead
R3
33
J4
Midi Thru
Midi Buffer
U5G
74HC14
VCC
GND
U5E
74HC14
U5F
74HC14
74HC14
U5D
Digital Output
C1
10nF
SPDIF_OUT
J5
Conn_Coaxial
Analog Output
U4
UDA1334A
I2S_WS
I2S_SDA
I2S_SCK
I2S_MUTE
Memory
U3
24LC01
EEPROM_SCL
EEPROM_SDA
Pin Breakout
J2
Pin Breakout
UART_RX
UART_TX
MIDI_IN
MIDI_IN_INV
MIDI_OUT
MIDI_OUT_INV
I2S_SCK
I2S_WS
I2S_SDA
I2S_MUTE
SPDIF_OUT
Power
PWR_FLAG
+12V
-12V
Eurorack
A-100
J7
A-100_Bus_Connector
L79L05_SO8
U9
C8
0.33uF
C9
0.1uF
DC Barrel Jack
J6
Jack-DC
9V-12V
1N4007
D6
C3
10uF
U6
LM1117-5.0
C4
10uF
LM1117-3.3
C2
10uF
U7
C5
10uF
FPGA / Synth
CV1_3.3V
CV0_3.3V
CmodA7-35T
U2
LEDs
R5
2k
D2
LED_MIDI_IN
R6
2k
D3
LED_MIDI_OUT
R7
2k
D4
LED_AUDIO
R8
2k
D5
LED_CLIP
R19
2k
D7
LED_POWER
Sheet: /
File: xfm2.sch
Title: xfm2/xva1 extended pcb
Size: A4
Date: 2021-06-27
Rev: 1.1
KiCad E.D.A. kicad (5.1.10)-1
Id: 1/1