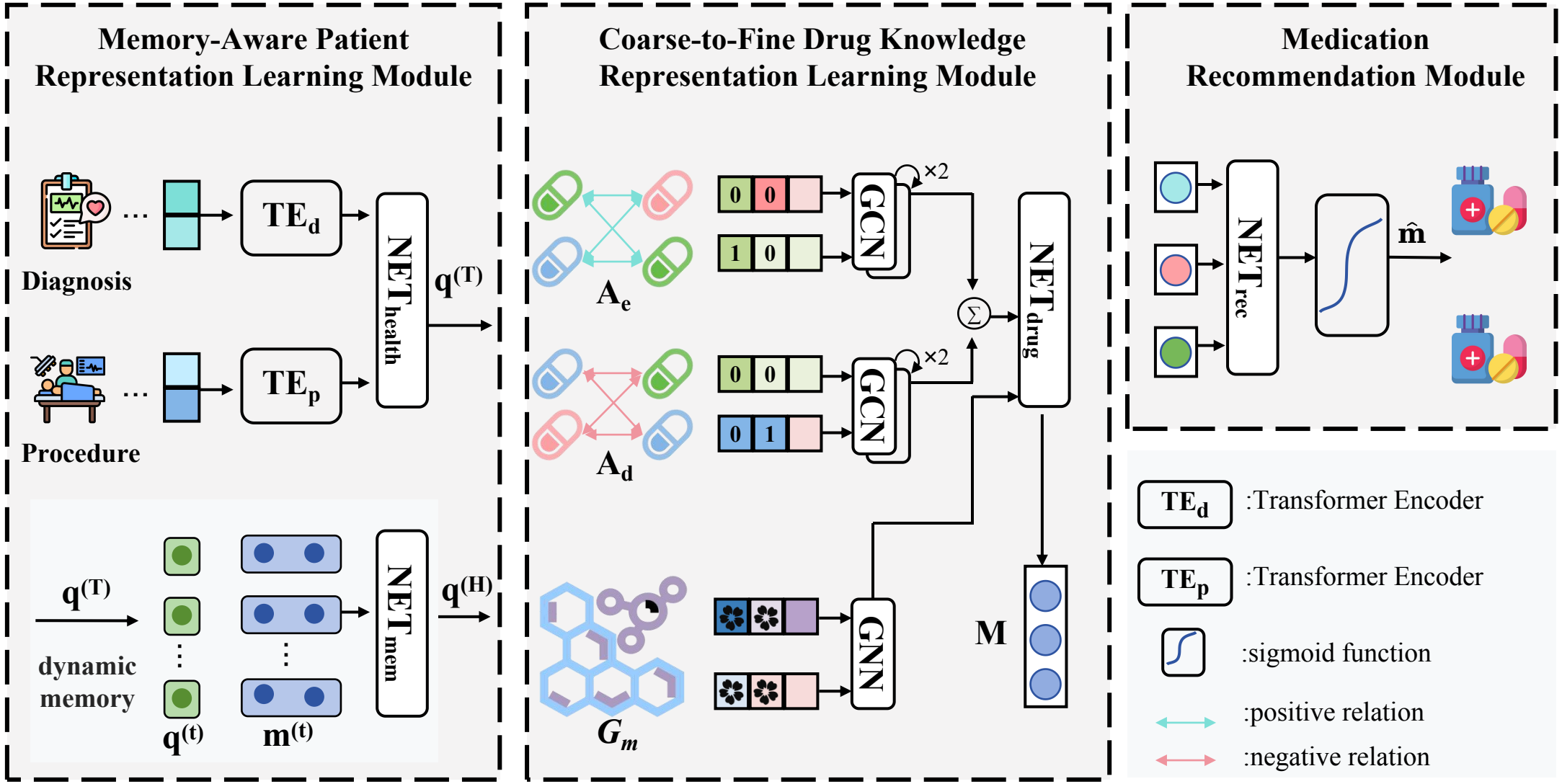
Memory-Aware Patient Representation Learning Module
Diagnosis
Procedure
TE_d
TE_p
NET_health
q^(T)
q^(T)
dynamic memory
q^(t)
m^(t)
NET_mem
q^(H)
Coarse-to-Fine Drug Knowledge Representation Learning Module
A_e
A_d
G_m
GCN
GCN
GNN
×2
×2
NET_drug
M
Medication Recommendation Module
NET_rec
m̂
TE_d :Transformer Encoder
TE_p :Transformer Encoder
:sigmoid function
:positive relation
:negative relation