MSM-BD: Multimodal Social Media Bot Detection Using Heterogeneous Information

Tingxuan Wu[*1], **Zhaorui Ma**[*2] **Yanjun Cui**[3], **Ziyi Zhou**[3], **Eric Wang**[4]

[1]The London School of Economics and Political Science
[2]George Mason University
[3]Dartmouth College
[4]Independent Researcher

Abstract

Although social bots can be engineered for constructive applications, their potential for misuse in manipulative schemes and malware distribution cannot be overlooked. This dichotomy underscores the critical need to detect social bots on social media platforms. Advances in artificial intelligence have improved the abilities of social bots, allowing them to generate content that is almost indistinguishable from human-created content. These advancements require the development of more advanced detection techniques to accurately identify these automated entities. Given the heterogeneous information landscape on social media, spanning images, texts, and user statistical features, we propose **MSM-BD** – A **M**ultimodal **S**ocial **M**edia **B**ot **D**etection approach using heterogeneous information. MSM-BD incorporates specialized encoders for heterogeneous information and introduces a cross-modal fusion technology, Cross-Modal Residual Cross-Attention (CMRCA), to enhance detection accuracy. We validate the effectiveness of our model through extensive experiments using the TwiBot-22 dataset.

Introduction

The rise of automated accounts, commonly known as bots, on platforms like X is a widely recognized issue. These bots, particularly malicious ones, have been associated with a variety of issues, including spreading fake news (Cui et al. 2020), meddling in elections (Howard, Kollanyi, and Woolley 2016), supporting extremist views (Marcellino et al. 2020), and propagating conspiracy theories (Ferrara 2020). Addressing these issues requires advanced methods to detect such bots.

Detecting social bots has attracted attention in various domains such as artificial intelligence (Efthimion, Payne, and Proferes 2018) and cybersecurity (Fazil, Sah, and Abulaish 2021), but it remains a formidable challenge (Cresci 2020). Similarly to a Turing test, the aim here is to determine whether a profile is managed by a human or a machine. But, unlike the Turing test which relies on direct interactions for making judgments, bot detection depends solely on the analysis of profile information. Further complicating this task, social bots exhibit a wide range of behaviors, each emulating a distinct aspect of human activity. This diversity requires detection algorithms to have the adaptability to recognize a broad spectrum of bot characteristics to ensure accurate identification.

In social media bot detection, reliably extracting effective features remains a significant challenge, particularly within the ever-evolving landscape of platform X. These bots, aiming to avoid detection, adeptly emulate real user behaviors, producing tweets that closely mirror those of authentic users. Consequently, traditional methods that rely on the extraction of single-modality features are inadequate to identify the nuanced characteristics that differentiate social bots. Despite efforts to improve detection models by incorporating heterogeneous information, accuracy remains suboptimal (Feng et al. 2022b). Consequently, one crucial question has arisen: **Is it feasible to develop a multimodal bot detection method that effectively utilizes heterogeneous information from social media platforms for more accurate identification?**

To overcome the challenges above, we propose **MSM-BD** – A **M**ultimodal **S**ocial **M**edia **B**ot **D**etection approach using heterogeneous information. In summary, our contribution is threefold:

1. **End-to-end Multimodal Social Media Bot Detection.** We propose MSM-BD, a one-stage end-to-end multimodal bot detection method that leverages modality-specialized feature encoders and our proposed cross-modal fusion module to effectively utilize heterogeneous information from social media.

2. **Effective Cross-modal Fusion.** We introduce a Cross-Modal Residual Cross-Attention (CMRCA) module to effectively handle the heterogeneous information of diverse data types in various application contexts. This module significantly improves our model's capability to detect social bots by optimizing the fusion of multimodal embeddings.

3. **State-of-the-Art Performance.** We conduct comprehensive experiments on the TwiBot-22 dataset (Feng et al. 2022b) to validate the effectiveness of MSM-BD. Our results demonstrate that our proposed model consistently detects social media bots under various conditions.

[*]These authors contributed equally.
Preprint. Do not distribute.

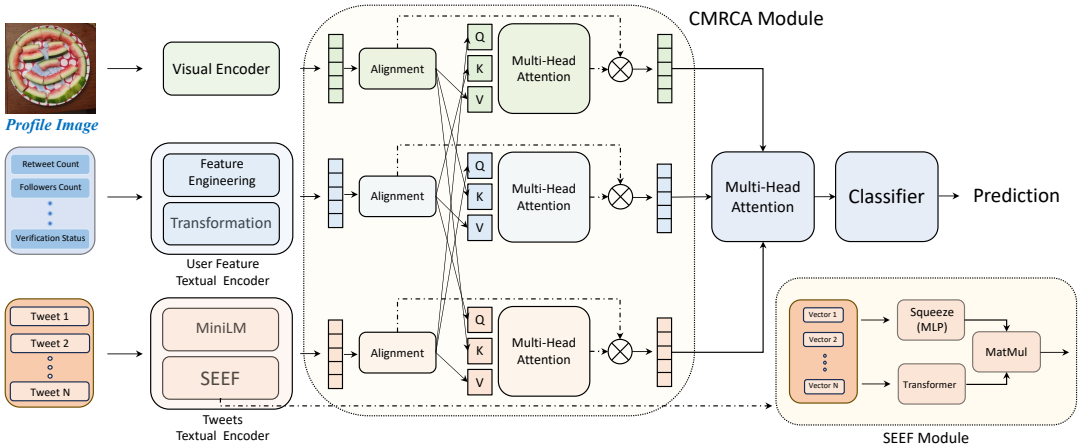

Figure 1: **The structure of MSM-BD pipeline.** MSM-BD effectively utilizes profile images, user features, and tweets, processing these inputs through specialized encoders and employing CMRCA module to fuse extracted features for accurate bot detection.

	User-Based Information (I_u^T)
Count	account age, tweet count, average tweets per day, followers and friends count, hashtag and mention counts
Status	verification status, account protection status
Properties	screen name properties, presence of descriptions, profile image attributes, location information, URL presence in descriptions

Table 1: User information involved in the User Feature Textual Encoder.

MSM-BD Pipeline

The overview of MSM-BD is shown in Figure 1, which outputs the bot probability (p) based on the heterogeneous features: profile image features from the visual modality (F_v^V), user features (F_u^T) and tweet text features (F_t^T) from textual modality. These cross-modal features are then fused through a Cross-Modal Residual Cross Attention (CMRCA) module, followed by a classifier to obtain the probability. The overall pipeline is expressed as below:

$$p = Classifier(CMRCA(F_v^V, F_u^T, F_t^T)), \tag{1}$$

where $F^{\{V,T\}}$ indicates features from visual/textual modality, $F_{\{v,u,t\}}$ represents the domain of visual profile, user features, and tweets, respectively. p represents the probability that an account is a bot. This probability is a critical indicator in the bot detection process, facilitating the identification and mitigation of automated bot behavior on social media platforms.

Multimodal Encoders

Visual Encoder The Visual Encoder (VE) used in MSM-BD is leveraged from a ResNet-18 model (He et al. 2016) pretrained on ImageNet (Russakovsky et al. 2015). The pretraining process on ImageNet provides the model with a more comprehensive understanding of various visual concepts than training it from scratch, allowing it to capture meaningful features from user profile images. Therefore, given I_v^V as the original profile image input, the extracted visual features F_v^V enable the model to adequately learn the difference between bot accounts and real ones, which facilitates subsequent feature fusion and bot detection, as expressed below:

$$F_v^V = ResNet(I_v^V). \tag{2}$$

User Feature Textual Encoder The User Feature Textual Encoder includes feature vectorization and transformation. Inspired by Kantepe (Kantepe and Ganiz 2017), we use feature engineering to vectorize and extract statistical features from the original user information I_u^T from various aspects, including the relevant count, status and properties. The information involved is shown in Table 1.

The encoded features are then transformed through a linear transformation followed by a non-linear GELU (Hendrycks and Gimpel 2016) activation function, as expressed below:

$$\begin{aligned} F_u^T &= GELU(LT(Vectorize(I_u^T))), \\ GELU(x) &= x \cdot \Phi(x), \end{aligned} \tag{3}$$

where $Vectorize(\cdot)$ indicates the feature engineering, $LT(\cdot)$ refers to linear transformation, and $GELU(\cdot)$ represents the non-linear activation ($\Phi(\cdot)$ is the cumulative distribution function of the standard normal distribution (Hendrycks and Gimpel 2016)). F_u^T is further utilized in the CMRCA module for cross-modal feature fusion. By incorporating this module, MSM-BD can effectively leverage user statistical features from multiple levels, improving its accuracy in social media bot detection.

Tweets Textual Encoder MSM-BD considers the tweets information for bot detection through the proposed Tweets Textual Encoder. Specifically, given $I_t^T = \{I_{t_1}^T, I_{t_2}^T, ..., I_{t_N}^T\}$ as the N recent tweets of the user, the tweets are first input into a pretrained language model, MiniLM (Wang et al. 2020), for linguistic feature extraction, as shown in Equation 4. As a powerful language model pretrained on an extensive corpus, MiniLM effectively captures the semantic information embedded within the text while preserving its lightweight structure. Therefore, we can obtain high-quality

textual embeddings that accurately reflect the content and context of the tweets, thereby enhancing the discriminative power of our model:

$$F_{l_i}^T = MiniLM(I_{t_i}^T), i \in [1, N], \tag{4}$$

where $F_{l_i}^T$ indicates the linguistic features generated by MiniLM for the ith tweet of the user. To integrate these N features for further fusion, a Sentence SE Fusion (SSEF) module is proposed and involved, as shown in Figure 1. Inspired by the SE Net (Hu, Shen, and Sun 2018) structure and its relevant applications in language feature extraction (Guo, Ma, and Zubiaga 2023), we utilize a fully connected network (MLP) to compress the extracted features of N tweets ($F_{l_i}^T$, $i \in [1, N]$) to distill the essential information while reducing noise and redundant details. Meanwhile, an attention-based Transformer Encoder (Vaswani et al. 2017) is applied to enhance the embedding of each tweet by capturing the intricate relationships and dependencies within the tweet sequence. The Transformer Encoder's attention mechanism allows our model to selectively attend to relevant parts of the tweet sequence, amplifying the representation of important information while suppressing irrelevant or misleading signals. Finally, the unified embedding of the tweet sequence (F_t^T) is obtained through matrix multiplication which provides a comprehensive representation of the text modality. The overall process is expressed below:

$$\begin{aligned} F_t^T = & MLP(F_{l_1}^T, F_{l_2}^T, \ldots, F_{l_N}^T) \\ & \times AttnEncode(F_{l_1}^T, F_{l_2}^T, \ldots, F_{l_N}^T), \end{aligned} \tag{5}$$

where $F_{l_i}^T$ is the embedding generated by MiniLM, $AttnEncode(\cdot)$ represents the attention-based Transformer Encoder.

By incorporating the SSEF module, our model effectively integrates contextual information and captures fine-grained dependencies among tweets. This holistic representation enables the discrimination between bot-generated and genuine user-generated tweets, thereby enhancing the overall performance of our social media bot detection system. The combination of MiniLM-based tweet encoding and the SSEF module provides a robust and versatile framework for analyzing textual modalities in social media, with implications for detecting various forms of suspicious or malicious activity.

Cross-Modal Residual Cross-Attention

The heterogeneous features of multimodality (F_v^V, F_u^T, F_t^T) are fused through the novel Cross-Modal Residual Cross-Attention (CMRCA) module. Unlike existing multimodal fusion work (Tan and Bansal 2019; Diao, Cheng, and Cheng 2023; Diao et al. 2023), we enable the explicit definition of the roles played by different modal embeddings during the fusion process. Specifically, we first involve a separate fully connected network to align the features of each modality, which guarantees the compatible format of the embeddings for subsequent operations.

The aligned embeddings are fed into three distinct multi-head attention mechanisms, where the Value (V) corresponds to the embedding of each modality. The roles of Key (K) and Query (Q) are assigned based on domain-specific considerations. For instance, in the user feature domain (F_u), user features (F_u^T) serve as V, tweet embeddings (F_t^T) as Q, and profile image embeddings (F_v^V) as K, leveraging their relevance to bot detection. Similar assignments apply for cross-attention in the visual (F_v) and tweet textual (F_t) domains. The single-head cross-attention can be expressed as:

$$\begin{aligned} F_u^{f_s} &= Softmax(\frac{F_t^T \cdot F_v^V}{\sqrt{d}})F_u^T, \\ F_v^{f_s} &= Softmax(\frac{F_t^T \cdot F_u^T}{\sqrt{d}})F_v^V, \\ F_t^{f_s} &= Softmax(\frac{F_u^T \cdot F_v^V}{\sqrt{d}})F_t^T, \end{aligned} \tag{6}$$

where d denotes the dimension of features after alignment, and $F_{\{u,v,t\}}^{f_s}$ indicates the single-head fusion modality of each domain (image profile, user features, and tweets). Specifically, to enhance the representational capacity, CMRCA employs multi-head attention. Therefore, the single-head attention is further concatenated across multiple attention heads as:

$$\begin{aligned} F_u^{f_m} &= Concat(F_{u_1}^{f_s}, F_{u_2}^{f_s}, ..., F_{u_M}^{f_s})W_u, \\ F_v^{f_m} &= Concat(F_{v_1}^{f_s}, F_{v_2}^{f_s}, ..., F_{v_M}^{f_s})W_v, \\ F_t^{f_m} &= Concat(F_{t_1}^{f_s}, F_{t_2}^{f_s}, ..., F_{t_M}^{f_s})W_t, \end{aligned} \tag{7}$$

where $F_{\{u,v,t\}}^{f_m}$ denotes the M-head multi-head attention, $W_{\{u,v,t\}}$ is the learnable weight matrices. By explicitly defining the roles of different modal embeddings, CMRCA allows the model to leverage the unique strengths of each modality and facilitate effective information exchange and integration.

To mitigate the risk of overfitting and preserve the original features of each modality, we employ residual connection after the multi-head attention mechanism through the concatenation between the original feature and the one after attention:

$$\begin{aligned} F_u^{f'_m} &= Concat(F_u^{f_m}, F_u^T), \\ F_v^{f'_m} &= Concat(F_v^{f_m}, F_v^V), \\ F_t^{f'_m} &= Concat(F_t^{f_m}, F_t^T). \end{aligned} \tag{8}$$

The features are then input into a multi-head attention for integration followed by a classifier to generate the final predictions:

$$p = Classifier(MultiHeadAttn(F_u^{f'_m}, F_v^{f'_m}, F_t^{f'_m})), \tag{9}$$

where the $MultiHeadAttn(\cdot)$ operation is similar to that in Equation 7, and the classifier is linear transformation mapping from d-dimension vector into numerical predicted value.

Experiment

Dataset

We use the TwiBot-22 dataset (Feng et al. 2022b) to localize X bots, leveraging its diverse features (*e.g.*, users, tweets,

Method	Accuracy ↑	F_1 score ↑	Type
Abreu *et al.* (Abreu, Ralha, and Gondim 2020)	0.7066	0.5344	F
Efthimion *et al.* (Efthimion, Payne, and Proferes 2018)	0.7408	0.2758	FT
Kantepe *et al.* (Kantepe and Ganiz 2017)	0.7640	0.5870	FT
RoBERTa (Liu et al. 2019)	0.7207	0.2053	FT
SGBot (Yang et al. 2020)	0.7508	0.3659	FTG
RGT (Feng et al. 2022a)	0.7647	0.4294	FTG
BotRGCN (Feng et al. 2021)	0.7966	0.5750	FTG
MSM-BD (Ours)	**0.8002**	**0.6105**	**FTI**

Table 2: Comparison with State-of-the-Art on TwiBot-22.

hashtags). Methods are categorized as "F" (metadata), "T" (text), "G" (network), and "I" (image).

Comparison with State-of-the-Art

Table 2 provides a comprehensive comparison of the performance of different methods on the TwiBot-22 test set. We employ the Accuracy and F_1 score metrics to evaluate the effectiveness of the models in social media bot detection. Notably, MSM-BD incorporates features from multiple modalities, including user metadata ("F"), text ("T"), and images ("I"), resulting in its comprehensive categorization of "FTI". This multimodal approach leverages the strengths of different modalities, enhancing the model's capability to detect social media bots.

MSM-BD demonstrates superior performance with an accuracy of 0.8002 and an F_1 score of 0.6105, outperforming all other methods on the TwiBot-22 dataset. MSM-BD achieves a 13.26% increase in accuracy and a 14.26% increase in F_1 score over the best "F" method by Abreu *et al.* (Abreu, Ralha, and Gondim 2020). Compared to the best "FT" method by Kantepe *et al.* (Kantepe and Ganiz 2017), MSM-BD shows improvements of 4.74% in accuracy and 4.00% in the F_1 score, illustrating its enhanced predictive precision. Additionally, MSM-BD surpasses the leading "FTG" method, BotRGCN (Feng et al. 2021), with a 0.45% increase in accuracy and a 6.17% increase in the F_1 score. Both metrics highlight MSM-BD's robust capability to accurately classify bots in social media, showcasing its effectiveness across different types of method with substantial improvements, particularly in the F_1 score.

Figure 2 shows two samples from the TwiBot-22 dataset. In these complex scenarios, where both samples have more than 1000 followers and a high volume of tweets, our model can accurately differentiate between real users and bots.

Ablation Study

As shown in Table 3, we conduct an ablation study of MSM-BD on the TwiBot-22 (Feng et al. 2022b) dataset to investigate the impact of our proposed CMRCA module.

Excluding the CMRCA module, the model combines outputs from the individual modality-specialized encoders (Visual Encoder, User Feature Textual Encoder, and Tweets Textual Encoder) using concatenation followed by a fully connected layer, instead of the attention-based fusion provided by CMRCA. The result of the ablation study demonstrates the significant contribution of the CMRCA module to the overall performance of MSM-BD.

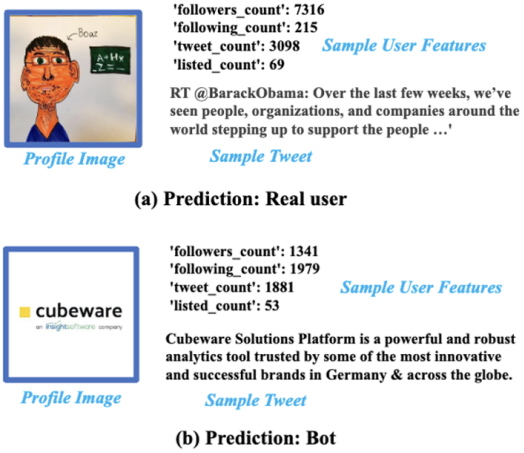

Figure 2: **Demonstration of bot detection on TwiBot-22 (Feng et al. 2022b) dataset.** MSM-BD classifies real users and bots correctly under complicated scenarios.

Method	Accuracy ↑	F_1 score ↑
w/o CMRCA module	0.7204	0.4516
MSM-BD (Ours)	**0.8002**	**0.6105**

Table 3: Ablation study on CMRCA module of MSM-BD on TwiBot-22. "w/o CMRCA module" indicates the model without the CMRCA module, using concatenation followed by a fully connected layer instead.

Conclusion

We present MSM-BD, a multimodal social media bot detection model that effectively utilizes heterogeneous information from images, text, and user statistics. MSM-BD overcomes the limitations of traditional methods that rely on single-modality features, providing a more comprehensive and accurate detection capability. Our experiments on the TwiBot-22 dataset demonstrate that MSM-BD significantly improves bot detection performance. This work offers a solution to enhance the accuracy and reliability of social media bot detection, inspiring further research to integrate diverse data sources for more effective solutions.

References

Abreu, J. V. F.; Ralha, C. G.; and Gondim, J. J. C. 2020. Twitter bot detection with reduced feature set. In *International Conference on Intelligence and Security Informatics*.

Cresci, S. 2020. A decade of social bot detection. *Computing Applications*.

Cui, L.; Seo, H.; Tabar, M.; Ma, F.; Wang, S.; and Lee, D. 2020. Deterrent: Knowledge guided graph attention network for detecting healthcare misinformation. In *International Conference on Knowledge Discovery and Data Mining*.

Diao, X.; Cheng, M.; Barrios, W.; and Jin, S. 2023. FT2TF: First-Person Statement Text-To-Talking Face Generation. *arXiv preprint arXiv:2312.05430*.

Diao, X.; Cheng, M.; and Cheng, S. 2023. AV-MaskEnhancer: Enhancing Video Representations through Audio-Visual Masked Autoencoder. In *International Conference on Tools with Artificial Intelligence*.

Efthimion, P. G.; Payne, S.; and Proferes, N. 2018. Supervised machine learning bot detection techniques to identify social twitter bots. *SMU Data Science Review*.

Fazil, M.; Sah, A. K.; and Abulaish, M. 2021. Deepsbd: a deep neural network model with attention mechanism for socialbot detection. *Transactions on Information Forensics and Security*.

Feng, S.; Tan, Z.; Li, R.; and Luo, M. 2022a. Heterogeneity-aware twitter bot detection with relational graph transformers. In *AAAI Conference on Artificial Intelligence*.

Feng, S.; Tan, Z.; Wan, H.; Wang, N.; Chen, Z.; Zhang, B.; Zheng, Q.; Zhang, W.; Lei, Z.; Yang, S.; et al. 2022b. TwiBot-22: Towards graph-based Twitter bot detection. In *Neural Information Processing Systems Track on Datasets and Benchmarks*.

Feng, S.; Wan, H.; Wang, N.; and Luo, M. 2021. BotRGCN: Twitter bot detection with relational graph convolutional networks. In *International Conference on Advances in Social Networks Analysis and Mining*.

Ferrara, E. 2020. What types of COVID-19 conspiracies are populated by Twitter bots? *First Monday*.

Guo, X.; Ma, J.; and Zubiaga, A. 2023. NUAA-QMUL-AIIT at Memotion 3: Multi-modal Fusion with Squeeze-and-Excitation for Internet Meme Emotion Analysis. *CEUR workshop proceedings*.

He, K.; Zhang, X.; Ren, S.; and Sun, J. 2016. Deep residual learning for image recognition. In *Conference on Computer Vision and Pattern Recognition*.

Hendrycks, D.; and Gimpel, K. 2016. Gaussian error linear units (gelus). *arXiv preprint arXiv:1606.08415*.

Howard, P. N.; Kollanyi, B.; and Woolley, S. 2016. Bots and Automation over Twitter during the US Election. *Oxford, UK: Project on Computational Propaganda*.

Hu, J.; Shen, L.; and Sun, G. 2018. Squeeze-and-excitation networks. In *Conference on Computer Vision and Pattern Recognition*.

Kantepe, M.; and Ganiz, M. C. 2017. Preprocessing framework for Twitter bot detection. In *International Conference on Computer Science and Engineering*.

Liu, Y.; Ott, M.; Goyal, N.; Du, J.; Joshi, M.; Chen, D.; Levy, O.; Lewis, M.; Zettlemoyer, L.; and Stoyanov, V. 2019. Roberta: A robustly optimized bert pretraining approach. *arXiv preprint arXiv:1907.11692*.

Marcellino, W.; Magnuson, M.; Stickells, A.; Boudreaux, B.; Helmus, T. C.; Geist, E.; and Winkelman, Z. 2020. *Counter-Radicalization Bot Research Using Social Bots to Fight Violent Extremism*.

Russakovsky, O.; Deng, J.; Su, H.; Krause, J.; Satheesh, S.; Ma, S.; Huang, Z.; Karpathy, A.; Khosla, A.; Bernstein, M.; et al. 2015. Imagenet large scale visual recognition challenge. *International Journal of Computer Vision*.

Tan, H.; and Bansal, M. 2019. Lxmert: Learning cross-modality encoder representations from transformers. In *Conference on Empirical Methods in Natural Language Processing*.

Vaswani, A.; Shazeer, N.; Parmar, N.; Uszkoreit, J.; Jones, L.; Gomez, A. N.; Kaiser, Ł.; and Polosukhin, I. 2017. Attention is all you need. In *Advances in Neural Information Processing Systems*.

Wang, W.; Wei, F.; Dong, L.; Bao, H.; Yang, N.; and Zhou, M. 2020. Minilm: Deep self-attention distillation for task-agnostic compression of pre-trained transformers. In *Advances in Neural Information Processing Systems*.

Yang, K.-C.; Varol, O.; Hui, P.-M.; and Menczer, F. 2020. Scalable and generalizable social bot detection through data selection. In *AAAI Conference on Artificial Intelligence*.