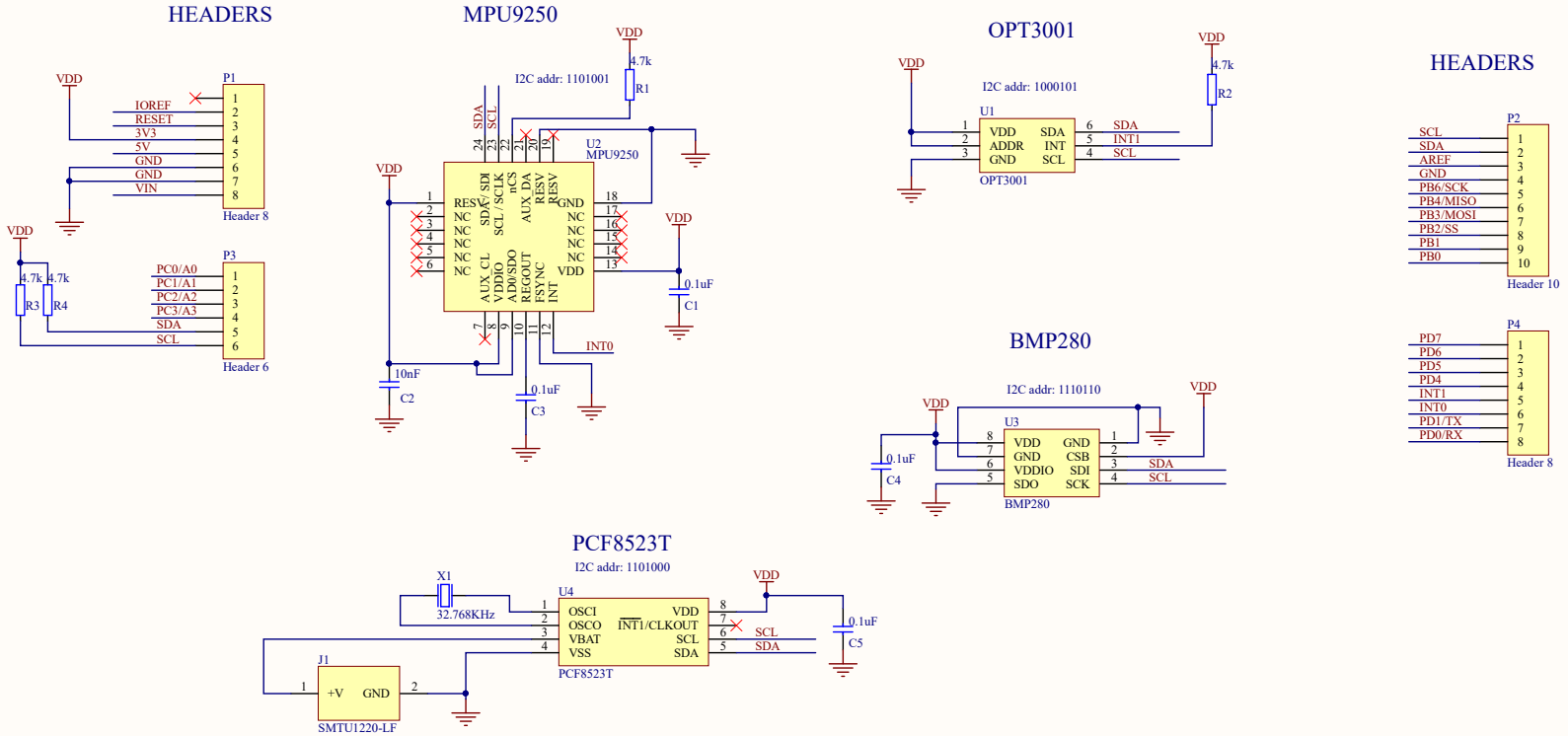

Title		
Size A3	Number	Revision
Date: 23/7/2018		Sheet of
File: E:\repo\..\Sheet1.SchDoc		Drawn By: