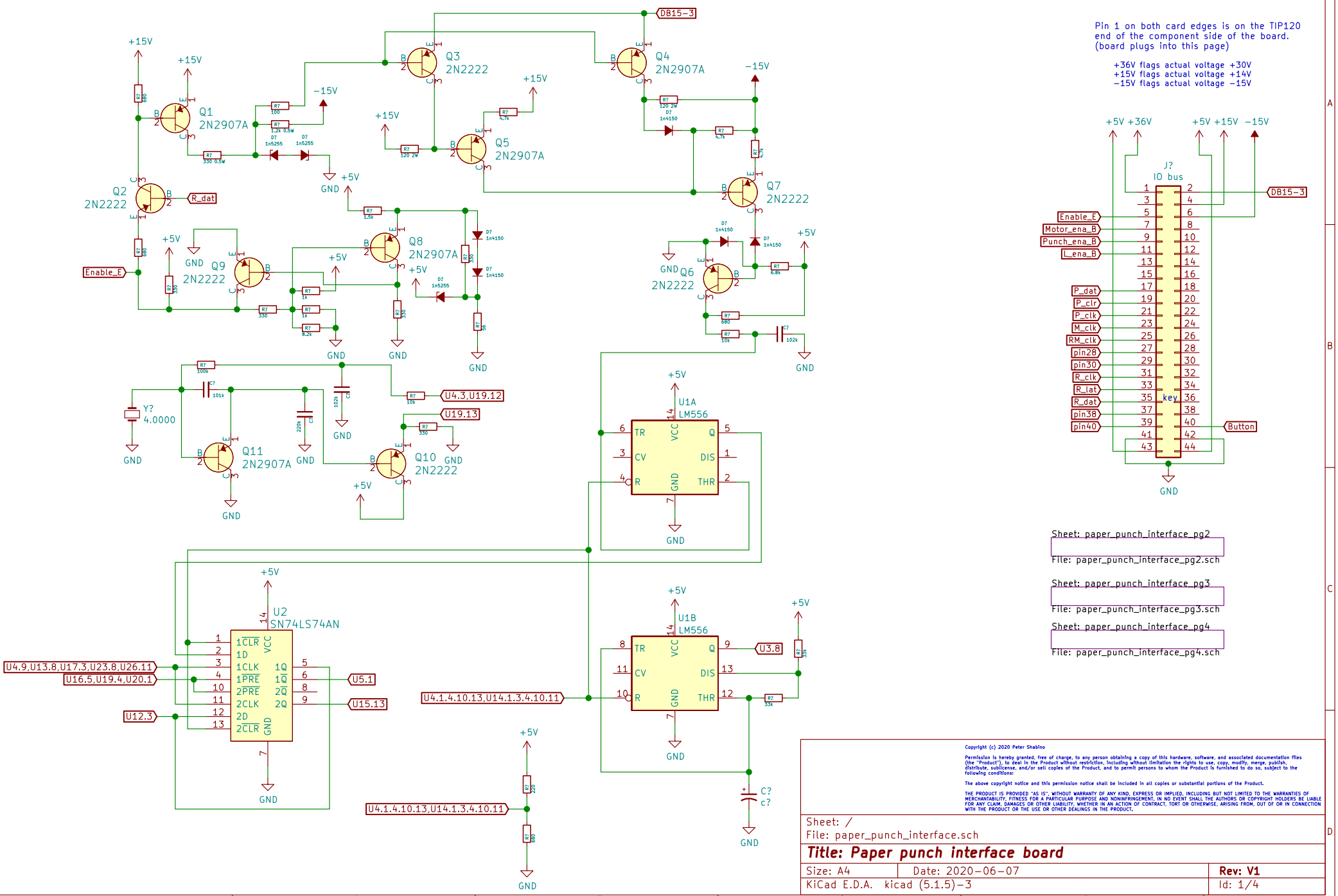
Pin 1 on both card edges is on the TIP120 end of the component side of the board. (board plugs into this page)
+36V flags actual voltage +30V
+15V flags actual voltage +14V
−15V flags actual voltage −15V
DB15-3
R_dat
Enable_E
Q1 2N2907A
Q2 2N2222
Q3 2N2222
Q4 2N2907A
Q5 2N2907A
Q6 2N2222
Q7 2N2222
Q8 2N2907A
Q9 2N2222
Q10 2N2222
Q11 2N2907A
Y? 4.0000
U4.3,U19.12
U19.13
U1A LM556
U1B LM556
U2 SN74LS74AN
U4.9,U13.8,U17.3,U23.8,U26.11
U16.5,U19.4,U20.1
U12.3
U5.1
U15.13
U4.1.4.10.13,U14.1.3.4.10.11
U3.8
J? IO bus
Enable_E
Motor_ena_B
Punch_ena_B
L_ena_B
P_dat
P_clr
P_clk
M_clk
RM_clk
pin28
pin30
R_clk
R_lat
R_dat
pin38
pin40
Button
key
Sheet: paper_punch_interface_pg2
File: paper_punch_interface_pg2.sch
Sheet: paper_punch_interface_pg3
File: paper_punch_interface_pg3.sch
Sheet: paper_punch_interface_pg4
File: paper_punch_interface_pg4.sch
Copyright (c) 2020 Peter Shabino
Permission is hereby granted, free of charge, to any person obtaining a copy of this hardware, software, and associated documentation files (the "Product"), to deal in the Product without restriction, including without limitation the rights to use, copy, modify, merge, publish, distribute, sublicense, and/or sell copies of the Product, and to permit persons to whom the Product is furnished to do so, subject to the following conditions:
The above copyright notice and this permission notice shall be included in all copies or substantial portions of the Product.
THE PRODUCT IS PROVIDED "AS IS", WITHOUT WARRANTY OF ANY KIND, EXPRESS OR IMPLIED, INCLUDING BUT NOT LIMITED TO THE WARRANTIES OF MERCHANTABILITY, FITNESS FOR A PARTICULAR PURPOSE AND NONINFRINGEMENT. IN NO EVENT SHALL THE AUTHORS OR COPYRIGHT HOLDERS BE LIABLE FOR ANY CLAIM, DAMAGES OR OTHER LIABILITY, WHETHER IN AN ACTION OF CONTRACT, TORT OR OTHERWISE, ARISING FROM, OUT OF OR IN CONNECTION WITH THE PRODUCT OR THE USE OR OTHER DEALINGS IN THE PRODUCT.
Sheet: /
File: paper_punch_interface.sch
Title: Paper punch interface board
Size: A4
Date: 2020-06-07
Rev: V1
KiCad E.D.A. kicad (5.1.5)-3
Id: 1/4

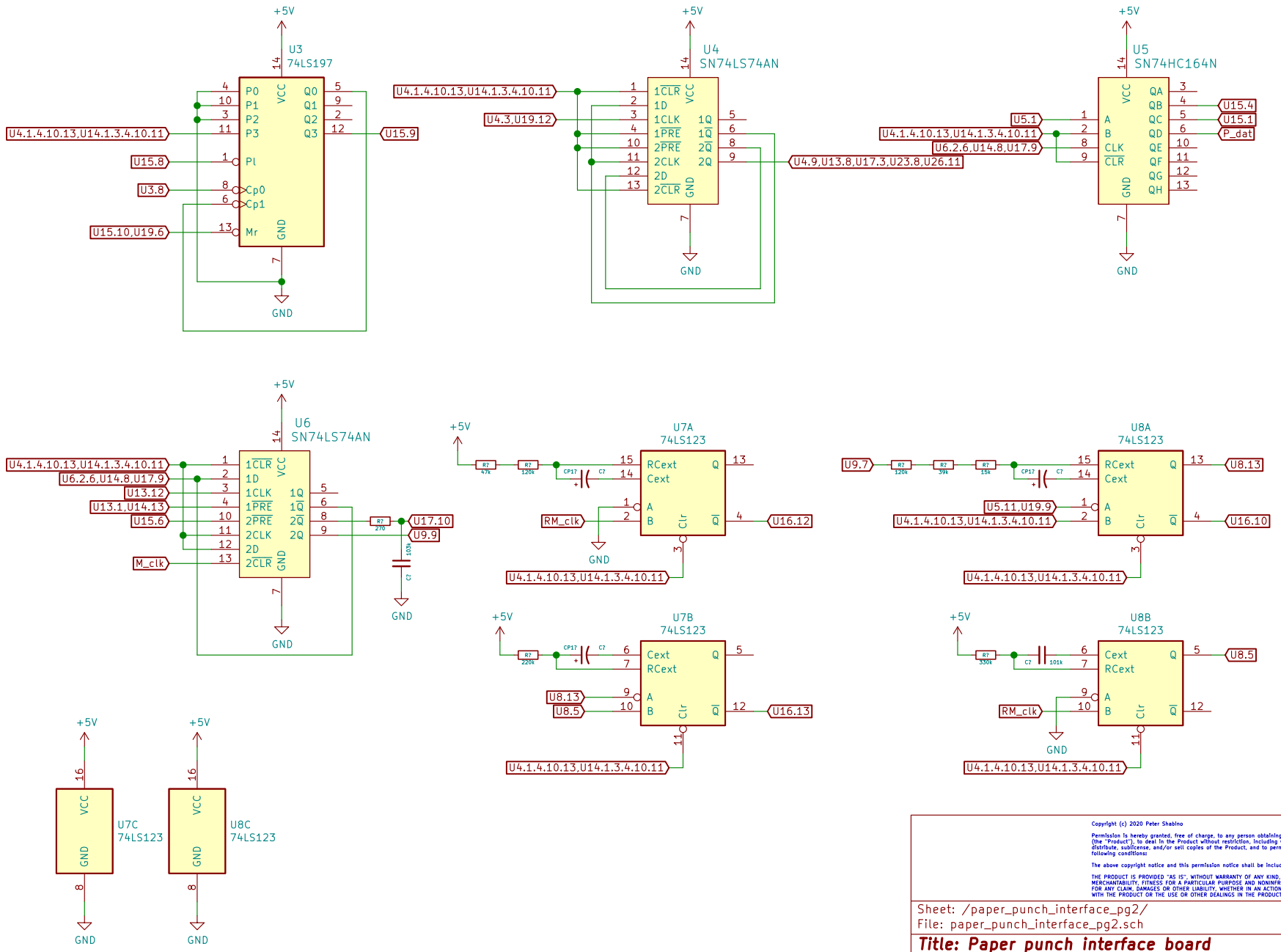

Copyright (c) 2020 Peter Shabino

Permission is hereby granted, free of charge, to any person obtaining a copy of this hardware, software, and associated documentation files (the "Product"), to deal in the Product without restriction, including without limitation the rights to use, copy, modify, merge, publish, distribute, sublicense, and/or sell copies of the Product, and to permit persons to whom the Product is furnished to do so, subject to the following conditions:

The above copyright notice and this permission notice shall be included in all copies or substantial portions of the Product.

THE PRODUCT IS PROVIDED "AS IS", WITHOUT WARRANTY OF ANY KIND, EXPRESS OR IMPLIED, INCLUDING BUT NOT LIMITED TO THE WARRANTIES OF MERCHANTABILITY, FITNESS FOR A PARTICULAR PURPOSE AND NONINFRINGEMENT. IN NO EVENT SHALL THE AUTHORS OR COPYRIGHT HOLDERS BE LIABLE FOR ANY CLAIM, DAMAGES OR OTHER LIABILITY, WHETHER IN AN ACTION OF CONTRACT, TORT OR OTHERWISE, ARISING FROM, OUT OF OR IN CONNECTION WITH THE PRODUCT OR THE USE OR OTHER DEALINGS IN THE PRODUCT.

Sheet: /paper_punch_interface_pg2/
File: paper_punch_interface_pg2.sch

Title: Paper punch interface board

Size: A4	Date: 2020-06-07	**Rev: V1**
KiCad E.D.A. kicad (5.1.5)-3		Id: 2/4

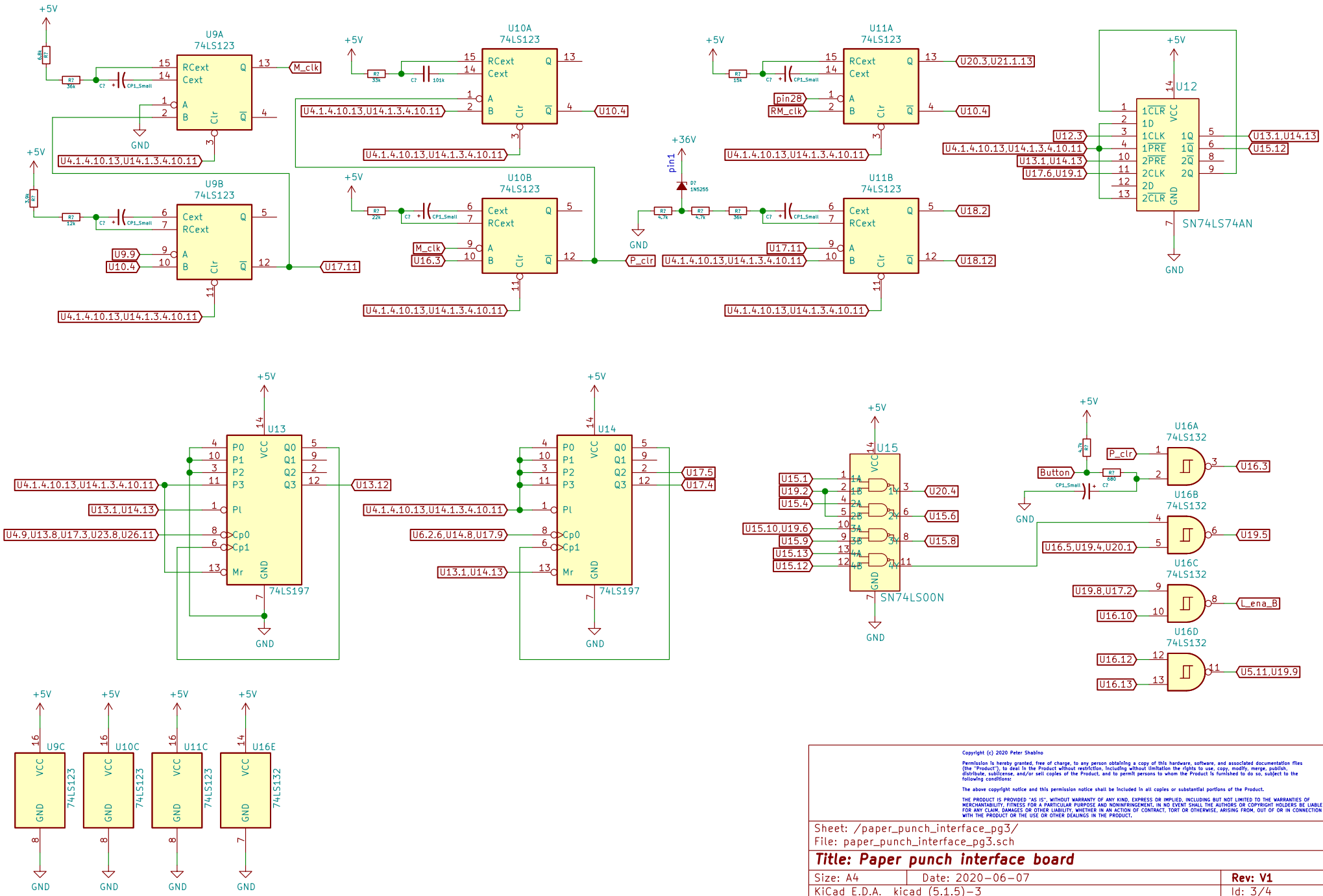

Copyright (c) 2020 Peter Shabino

Permission is hereby granted, free of charge, to any person obtaining a copy of this hardware, software, and associated documentation files (the "Product"), to deal in the Product without restriction, including without limitation the rights to use, copy, modify, merge, publish, distribute, sublicense, and/or sell copies of the Product, and to permit persons to whom the Product is furnished to do so, subject to the following conditions:

The above copyright notice and this permission notice shall be included in all copies or substantial portions of the Product.

THE PRODUCT IS PROVIDED "AS IS", WITHOUT WARRANTY OF ANY KIND, EXPRESS OR IMPLIED, INCLUDING BUT NOT LIMITED TO THE WARRANTIES OF MERCHANTABILITY, FITNESS FOR A PARTICULAR PURPOSE AND NONINFRINGEMENT. IN NO EVENT SHALL THE AUTHORS OR COPYRIGHT HOLDERS BE LIABLE FOR ANY CLAIM, DAMAGES OR OTHER LIABILITY, WHETHER IN AN ACTION OF CONTRACT, TORT OR OTHERWISE, ARISING FROM, OUT OF OR IN CONNECTION WITH THE PRODUCT OR THE USE OR OTHER DEALINGS IN THE PRODUCT.

Sheet: /paper_punch_interface_pg3/
File: paper_punch_interface_pg3.sch

Title: Paper punch interface board

Size: A4	Date: 2020-06-07	**Rev: V1**
KiCad E.D.A. kicad (5.1.5)-3		Id: 3/4

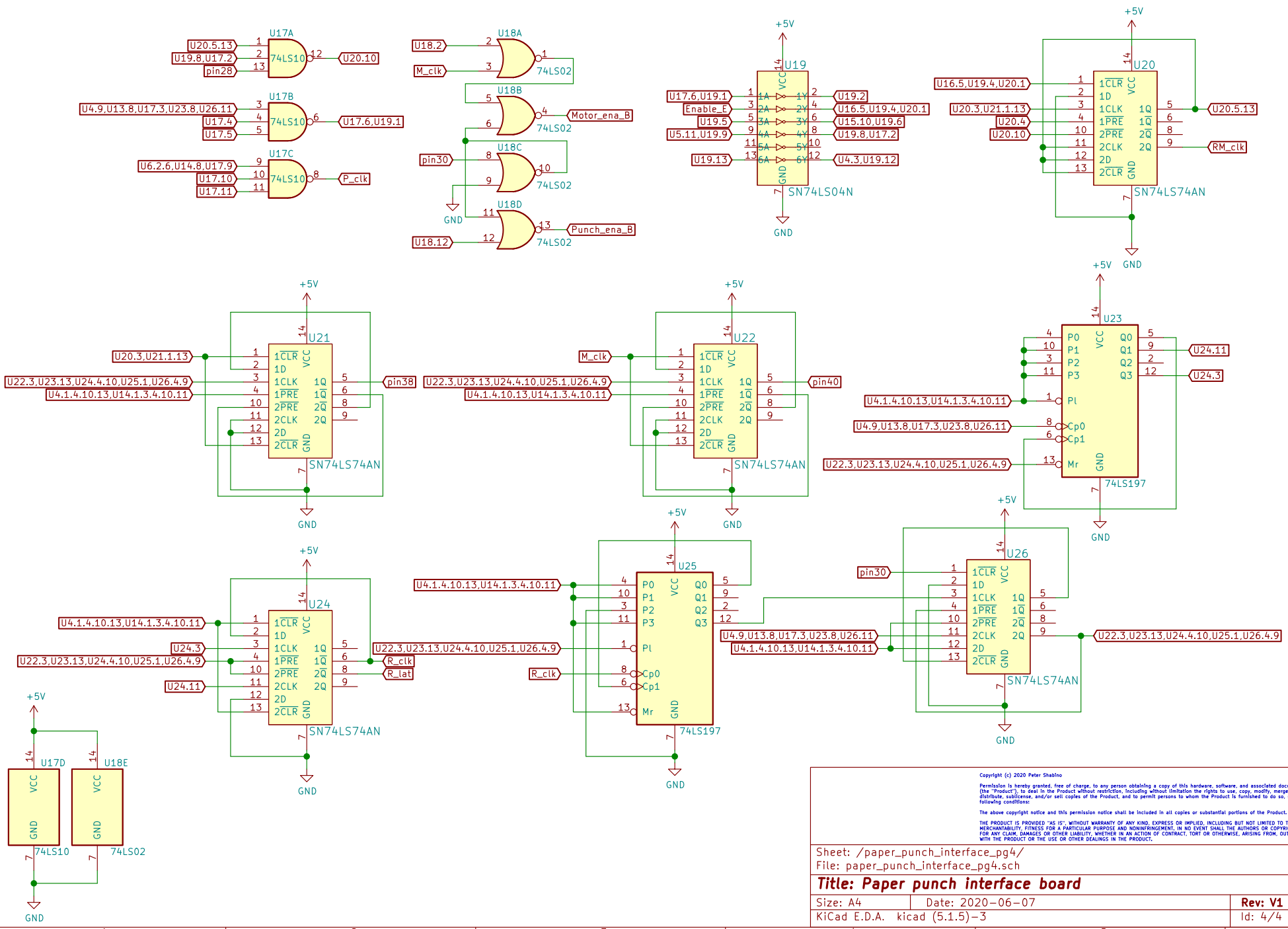

Copyright (c) 2020 Peter Shabino

Permission is hereby granted, free of charge, to any person obtaining a copy of this hardware, software, and associated documentation files (the "Product"), to deal in the Product without restriction, including without limitation the rights to use, copy, modify, merge, publish, distribute, sublicense, and/or sell copies of the Product, and to permit persons to whom the Product is furnished to do so, subject to the following conditions:

The above copyright notice and this permission notice shall be included in all copies or substantial portions of the Product.

THE PRODUCT IS PROVIDED "AS IS", WITHOUT WARRANTY OF ANY KIND, EXPRESS OR IMPLIED, INCLUDING BUT NOT LIMITED TO THE WARRANTIES OF MERCHANTABILITY, FITNESS FOR A PARTICULAR PURPOSE AND NONINFRINGEMENT. IN NO EVENT SHALL THE AUTHORS OR COPYRIGHT HOLDERS BE LIABLE FOR ANY CLAIM, DAMAGES OR OTHER LIABILITY, WHETHER IN AN ACTION OF CONTRACT, TORT OR OTHERWISE, ARISING FROM, OUT OF OR IN CONNECTION WITH THE PRODUCT OR THE USE OR OTHER DEALINGS IN THE PRODUCT.

Sheet: /paper_punch_interface_pg4/
File: paper_punch_interface_pg4.sch

Title: Paper punch interface board

Size: A4	Date: 2020-06-07	**Rev: V1**
KiCad E.D.A. kicad (5.1.5)-3		Id: 4/4