APEX Competition Robot Instructions

#51515

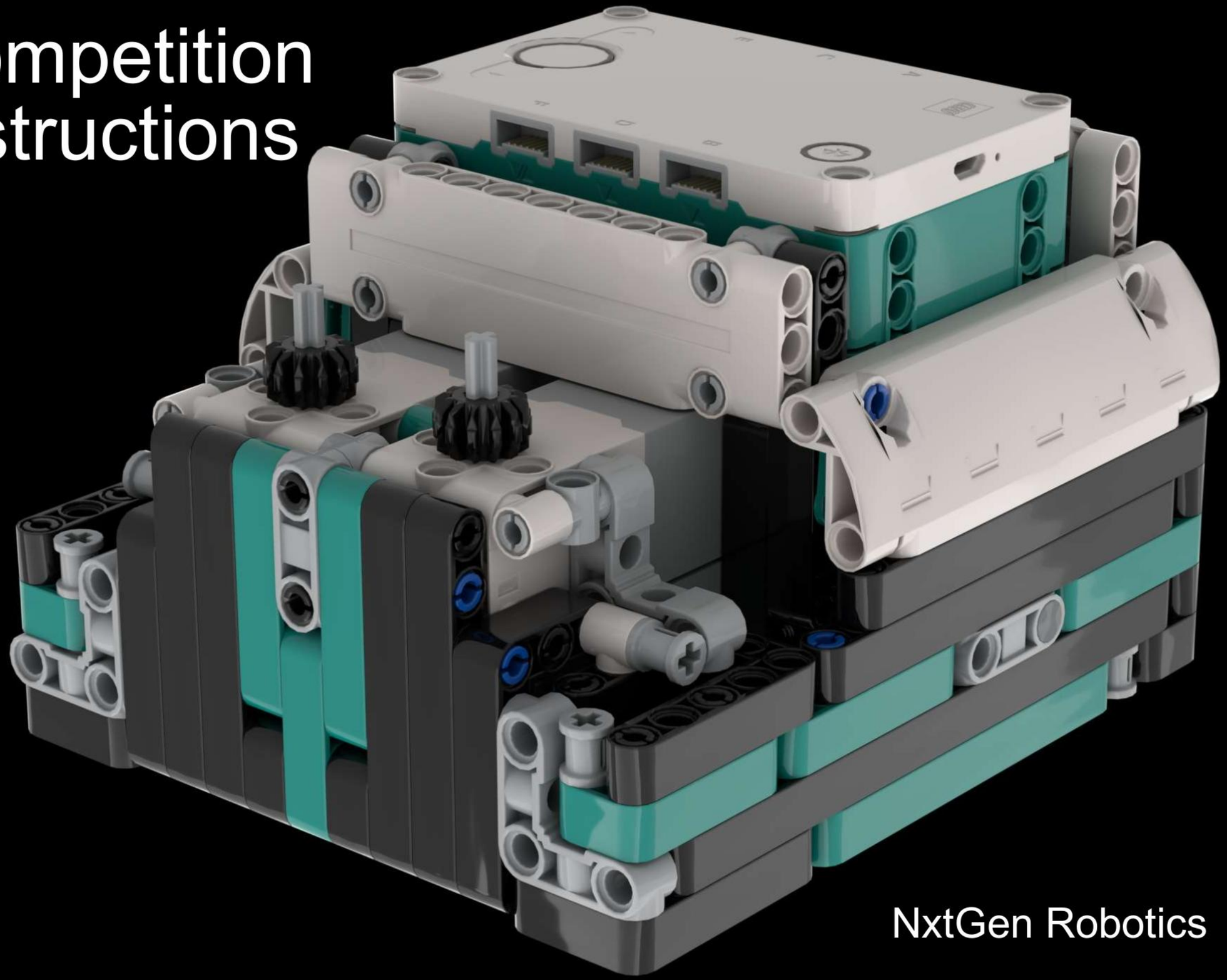

NxtGen Robotics

1

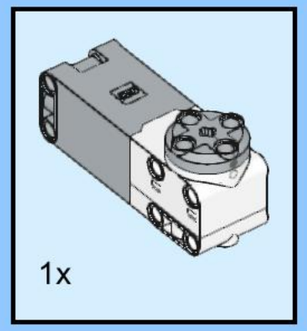

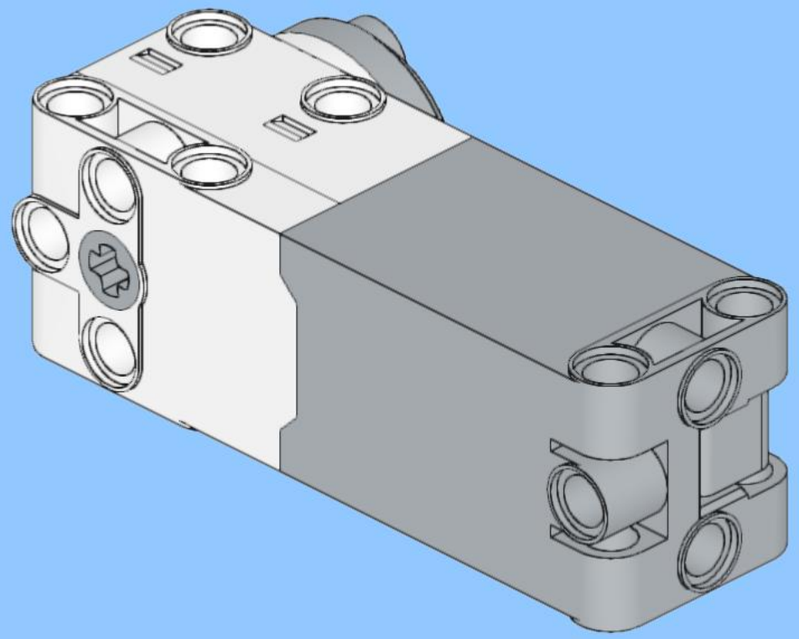

2

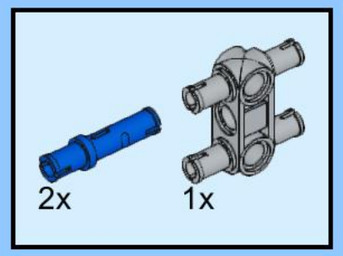

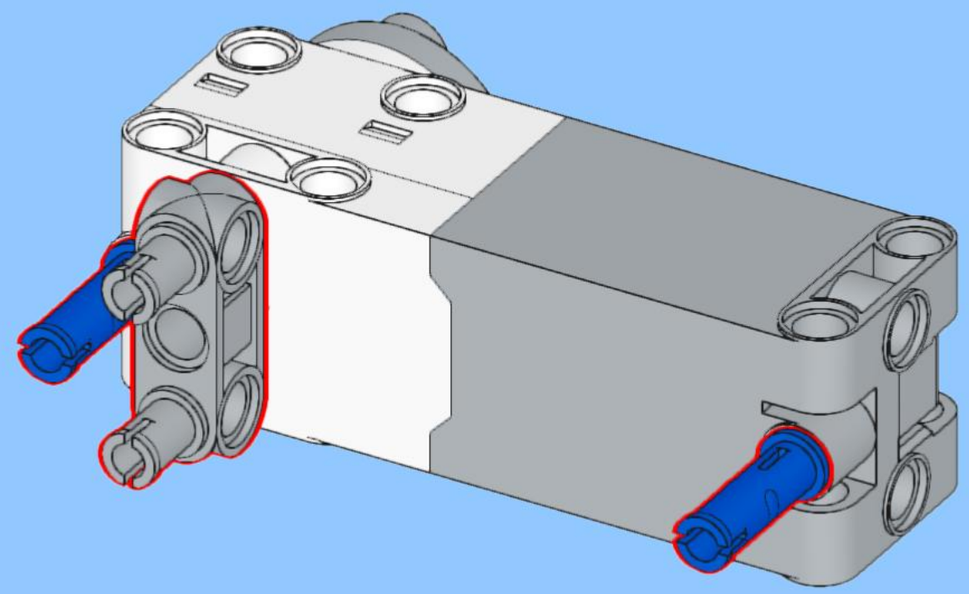

3

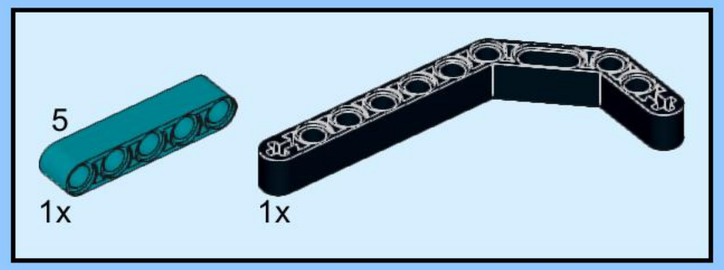

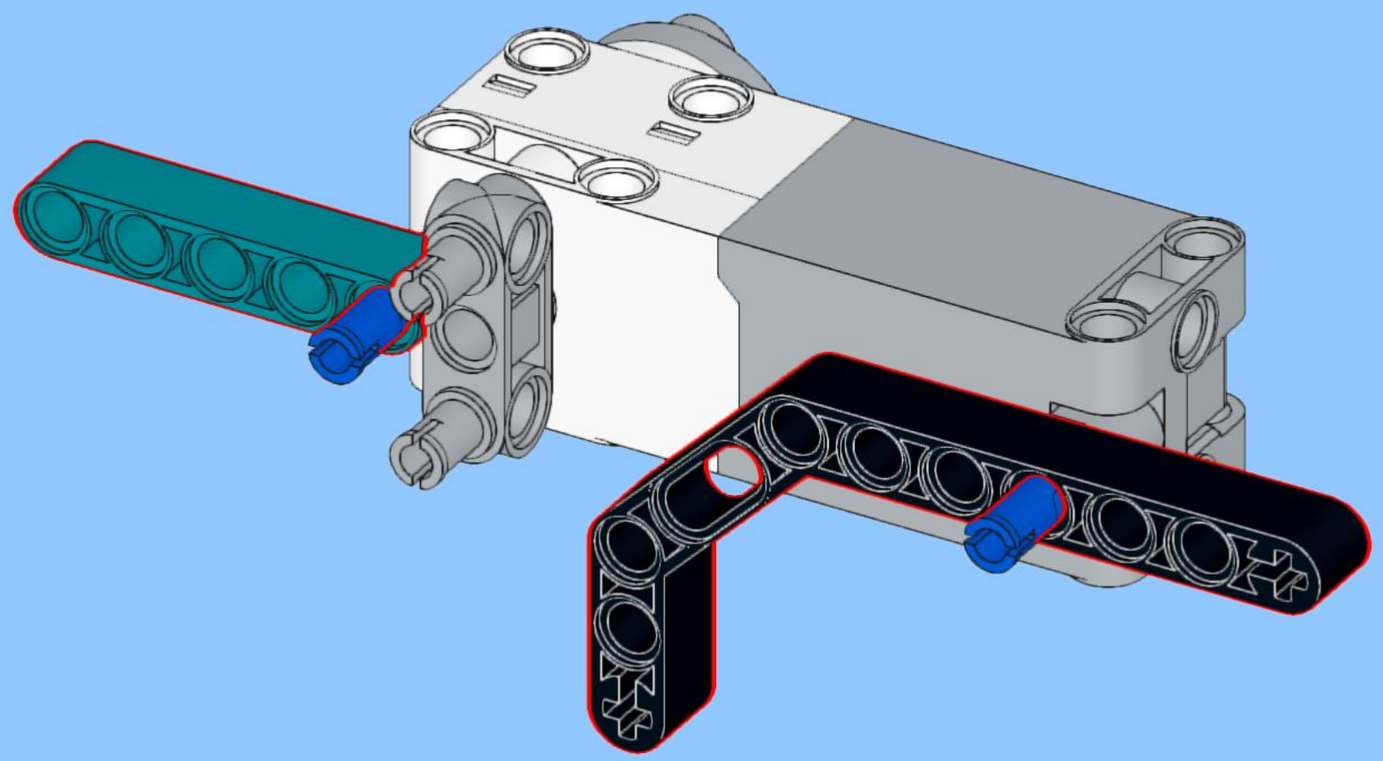

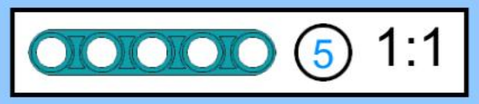

4

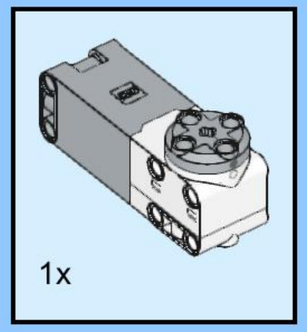

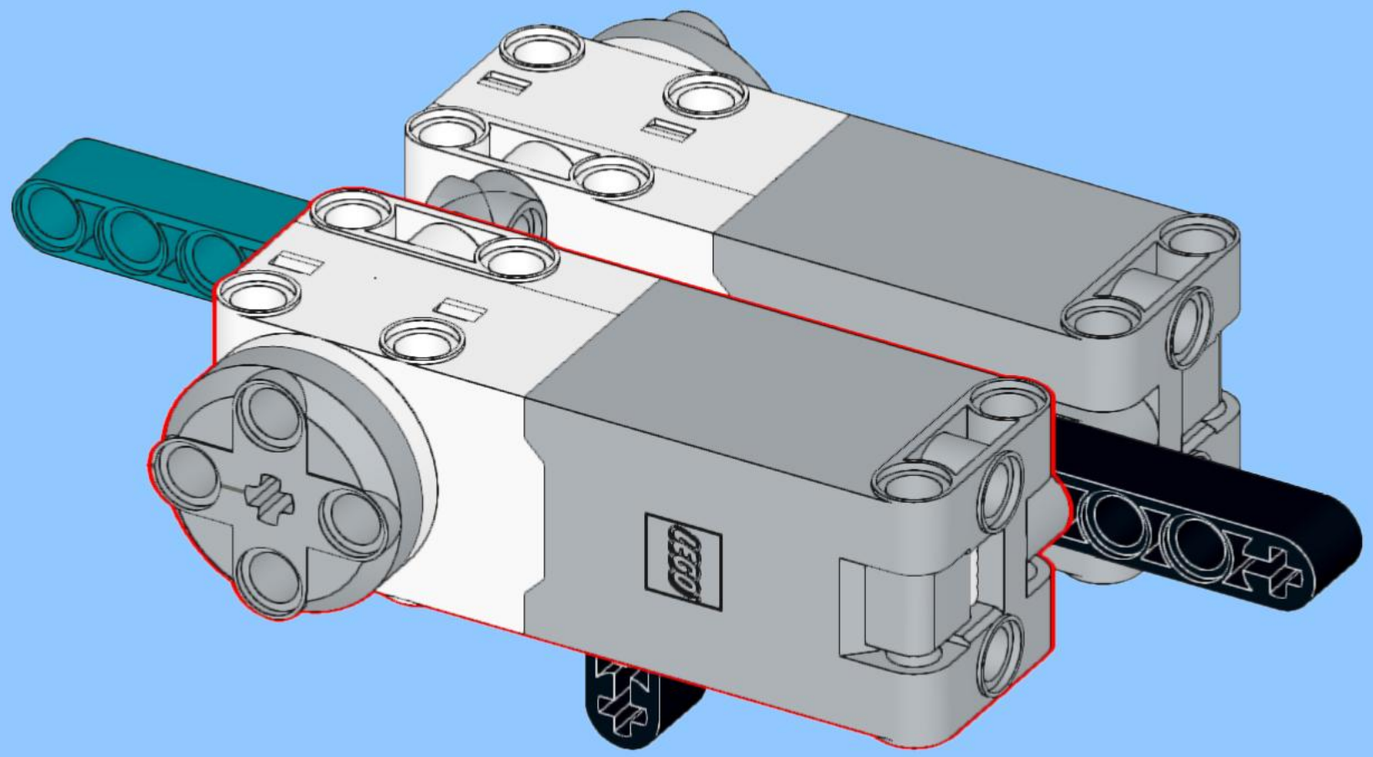

5

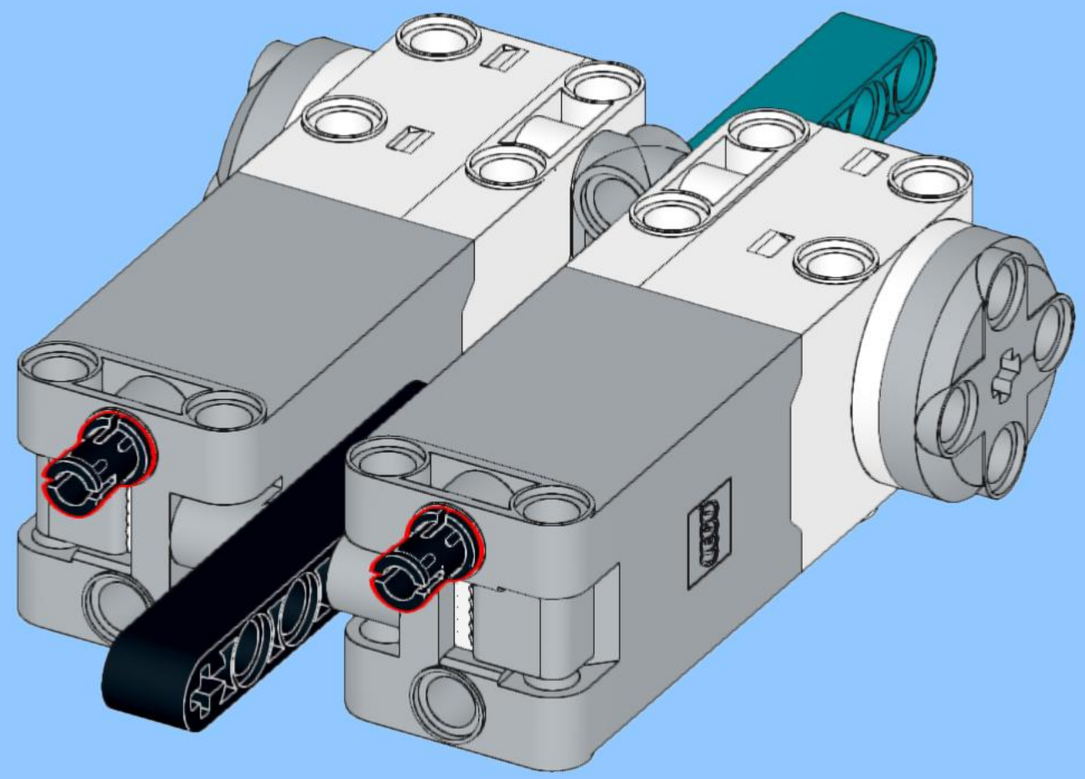

6

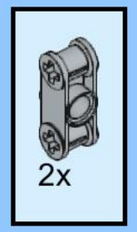

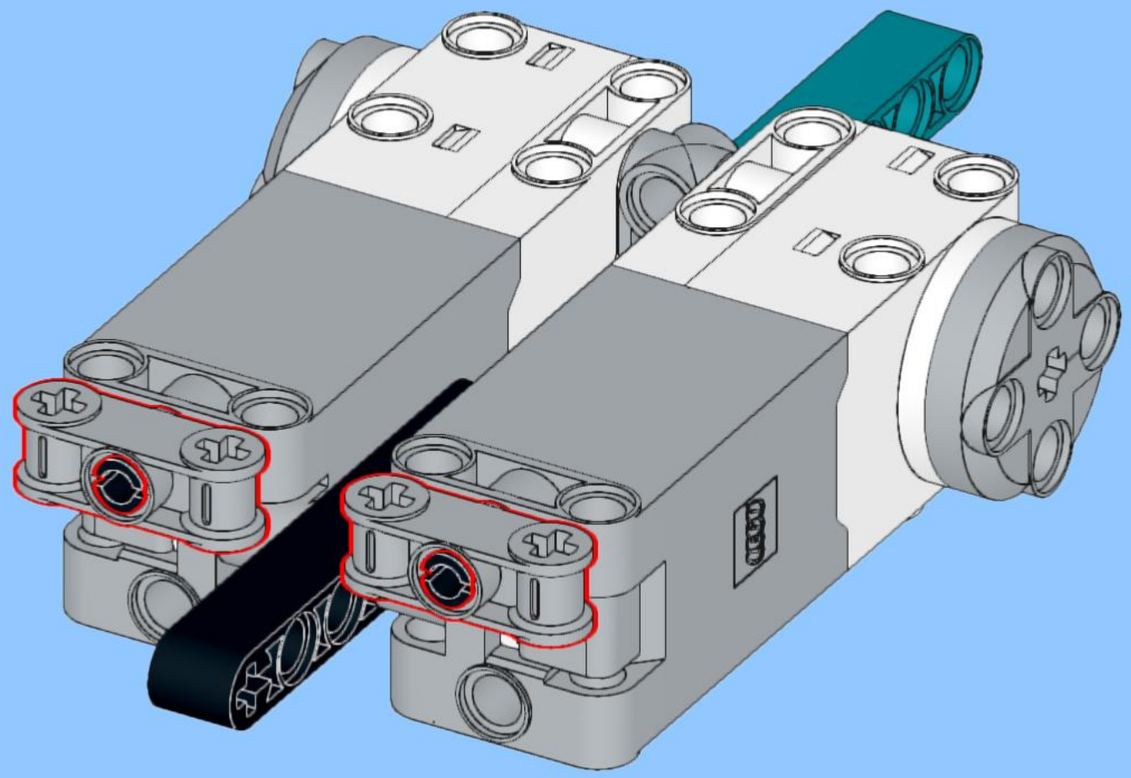

7

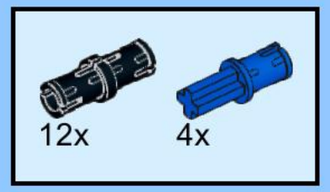

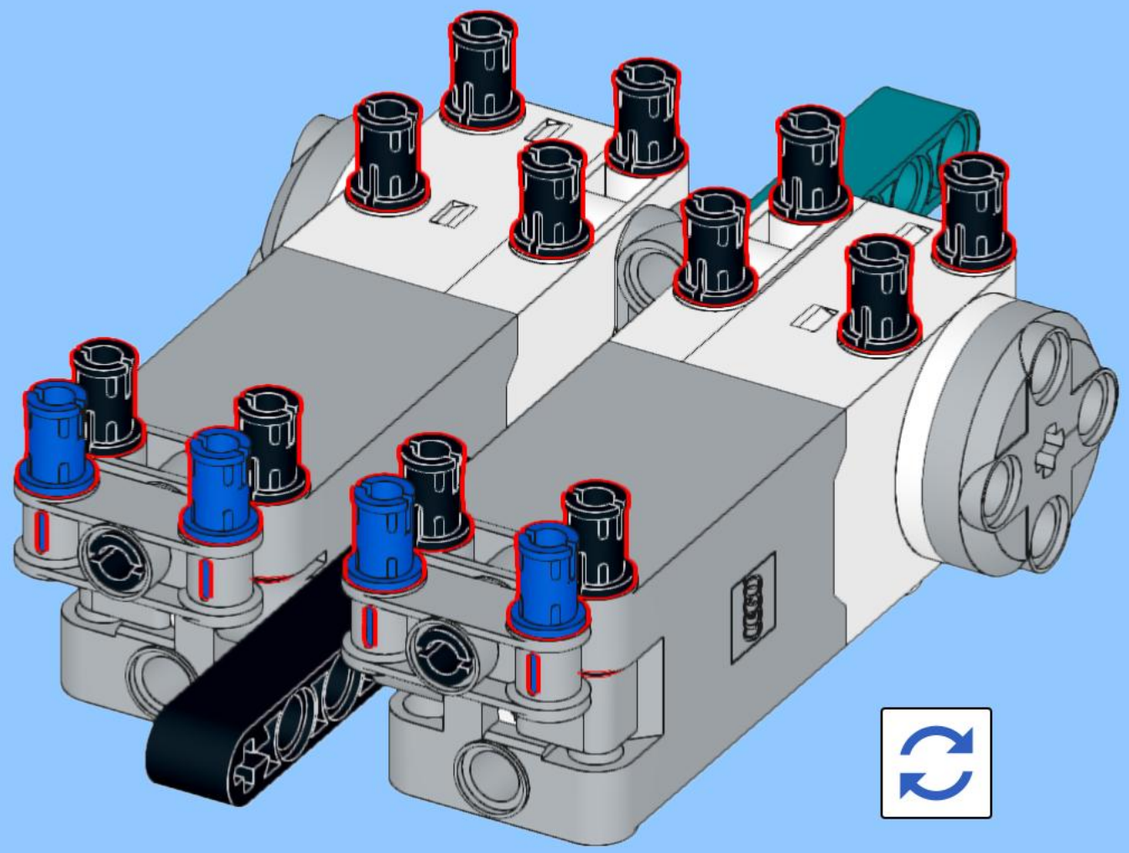

8

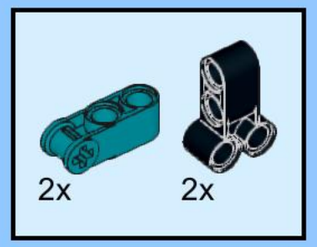

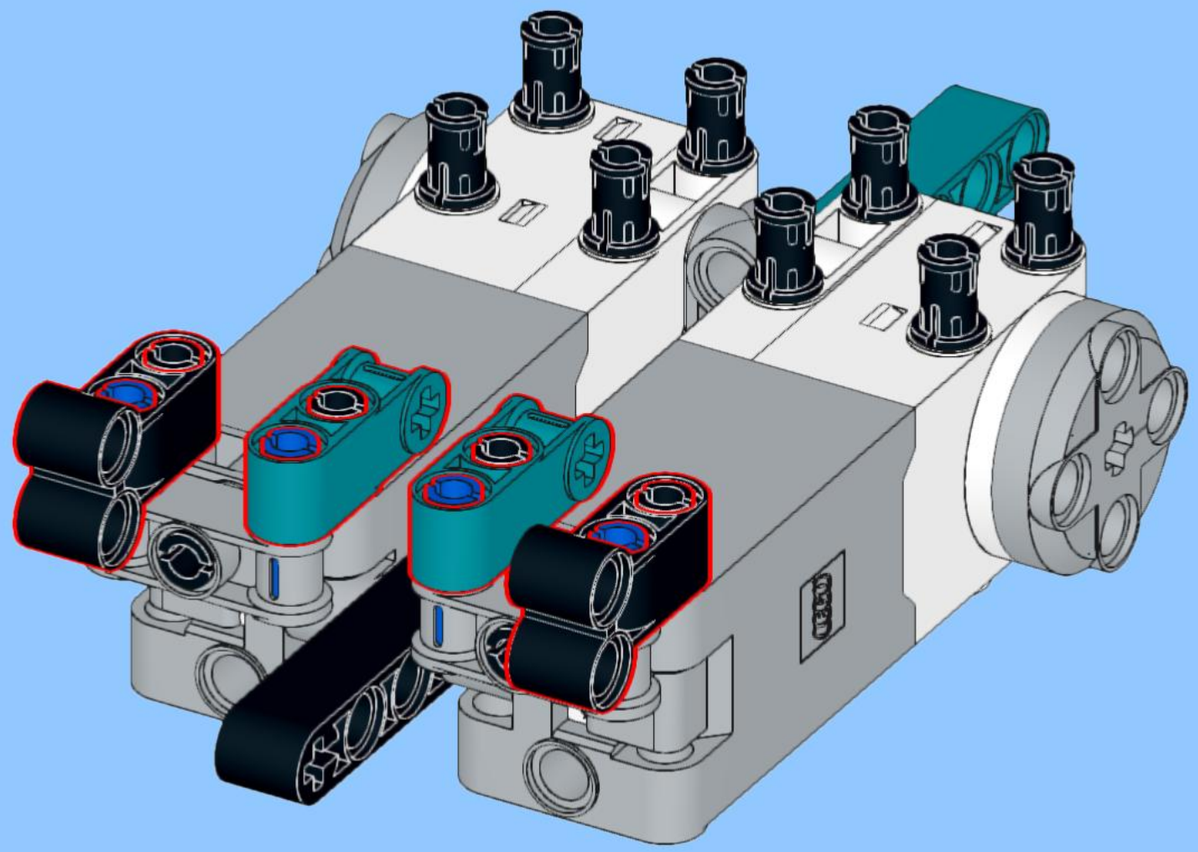

9

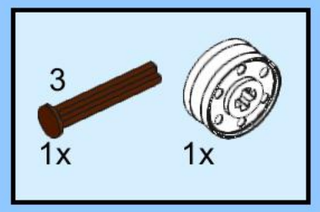

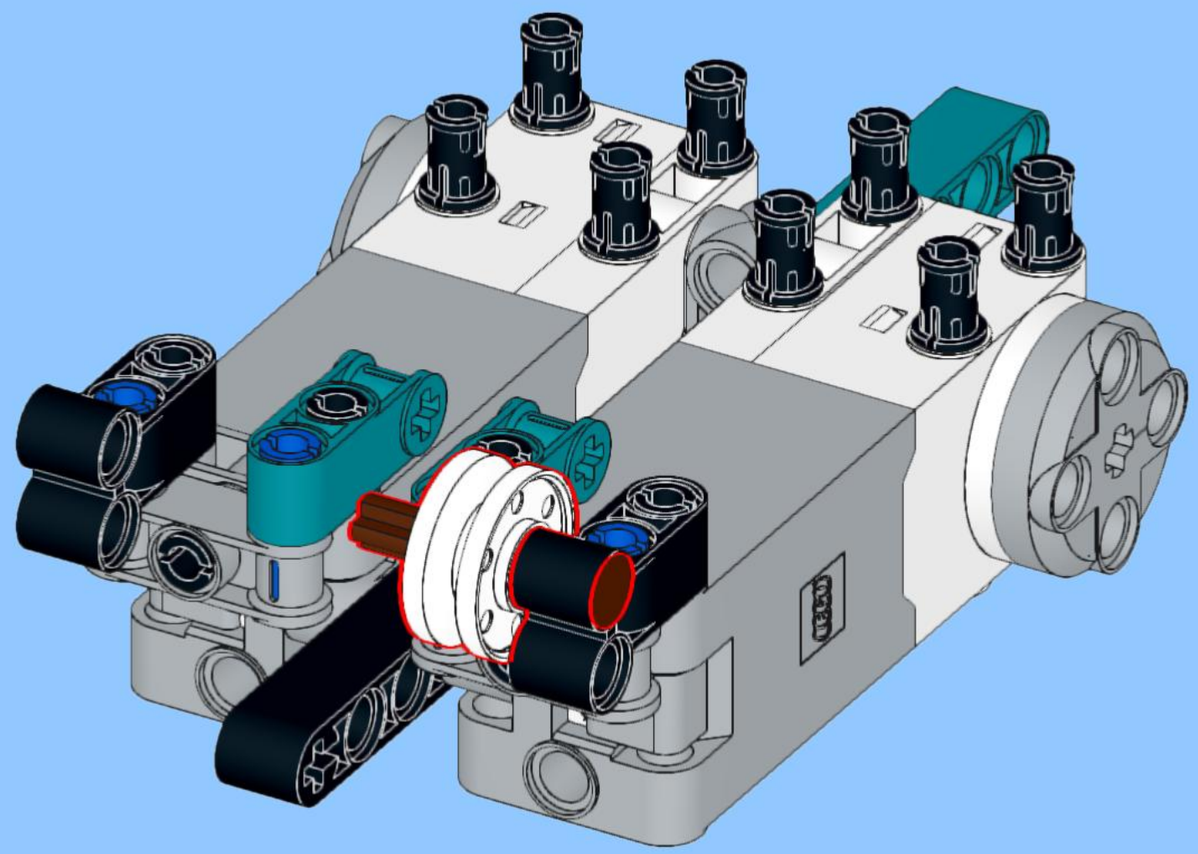

10

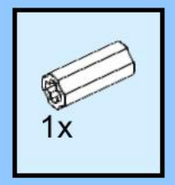

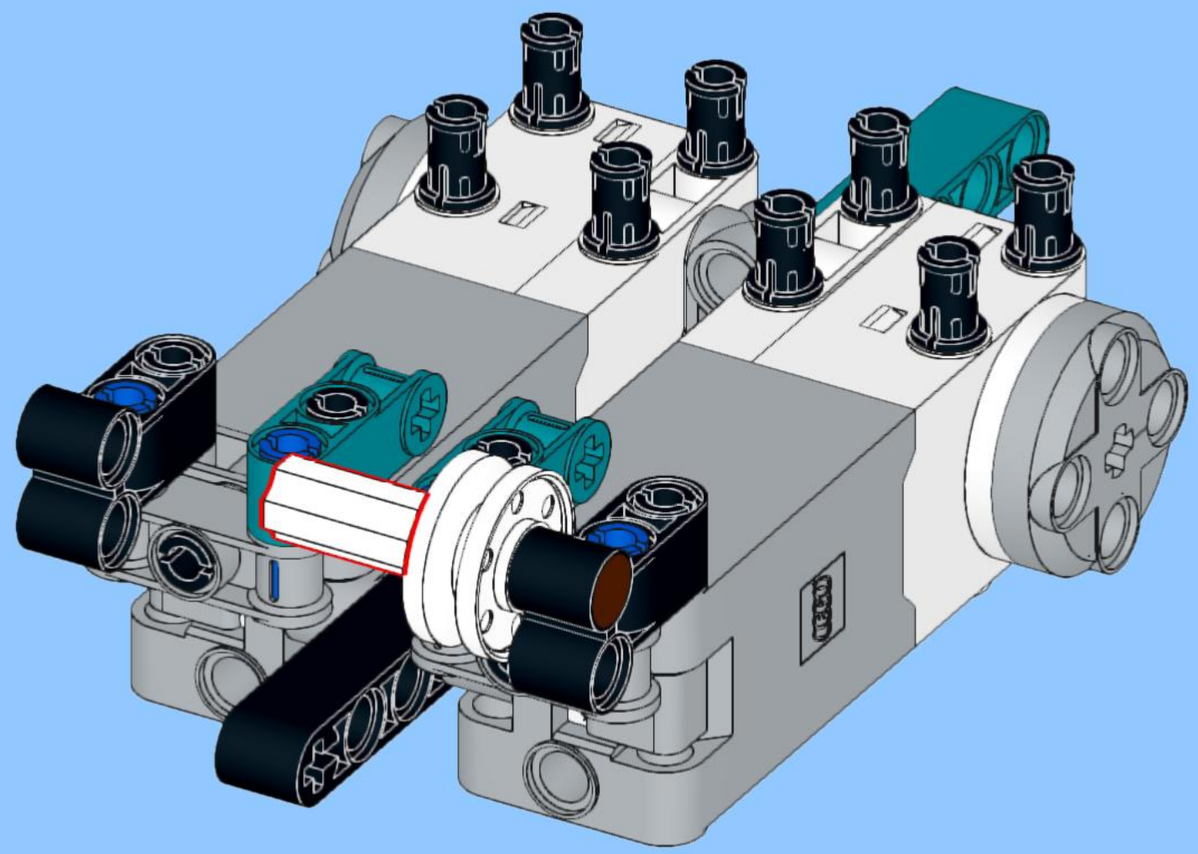

11

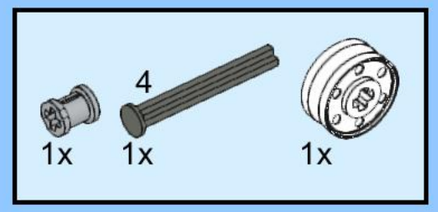

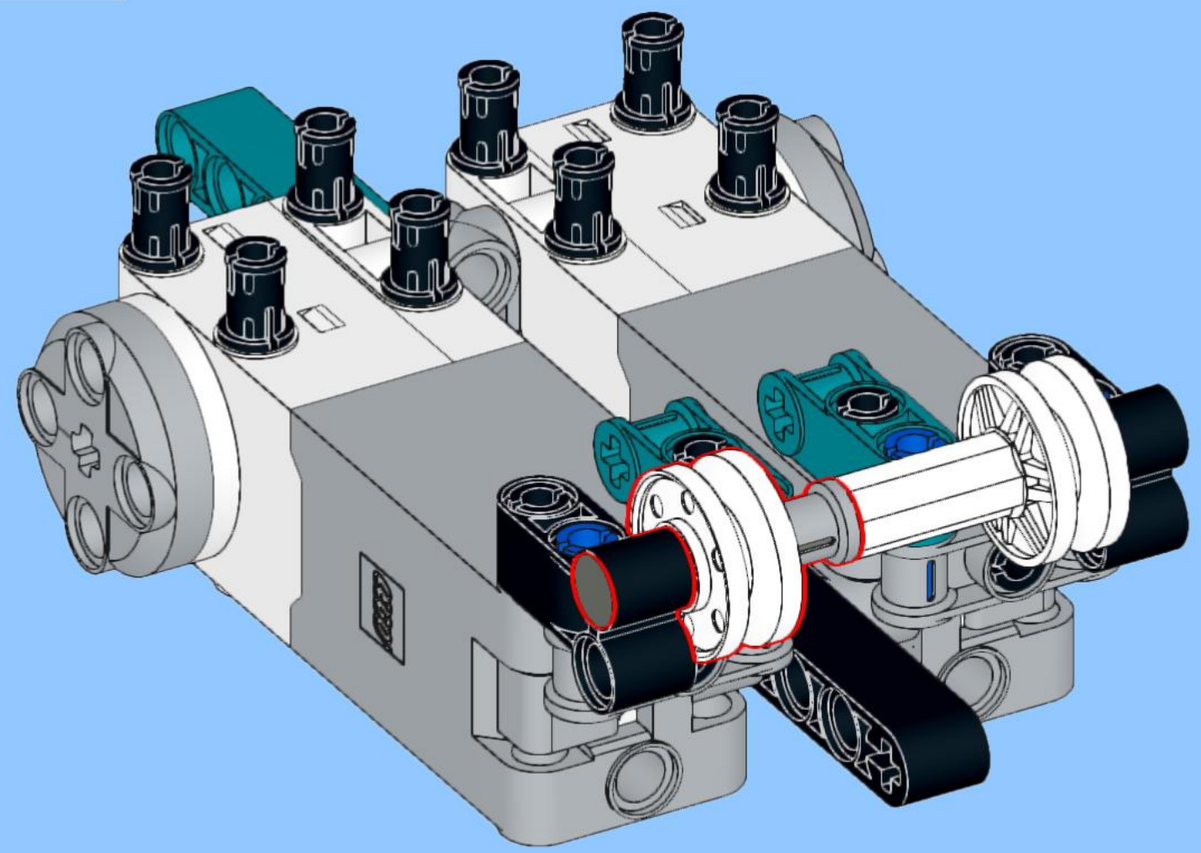

12

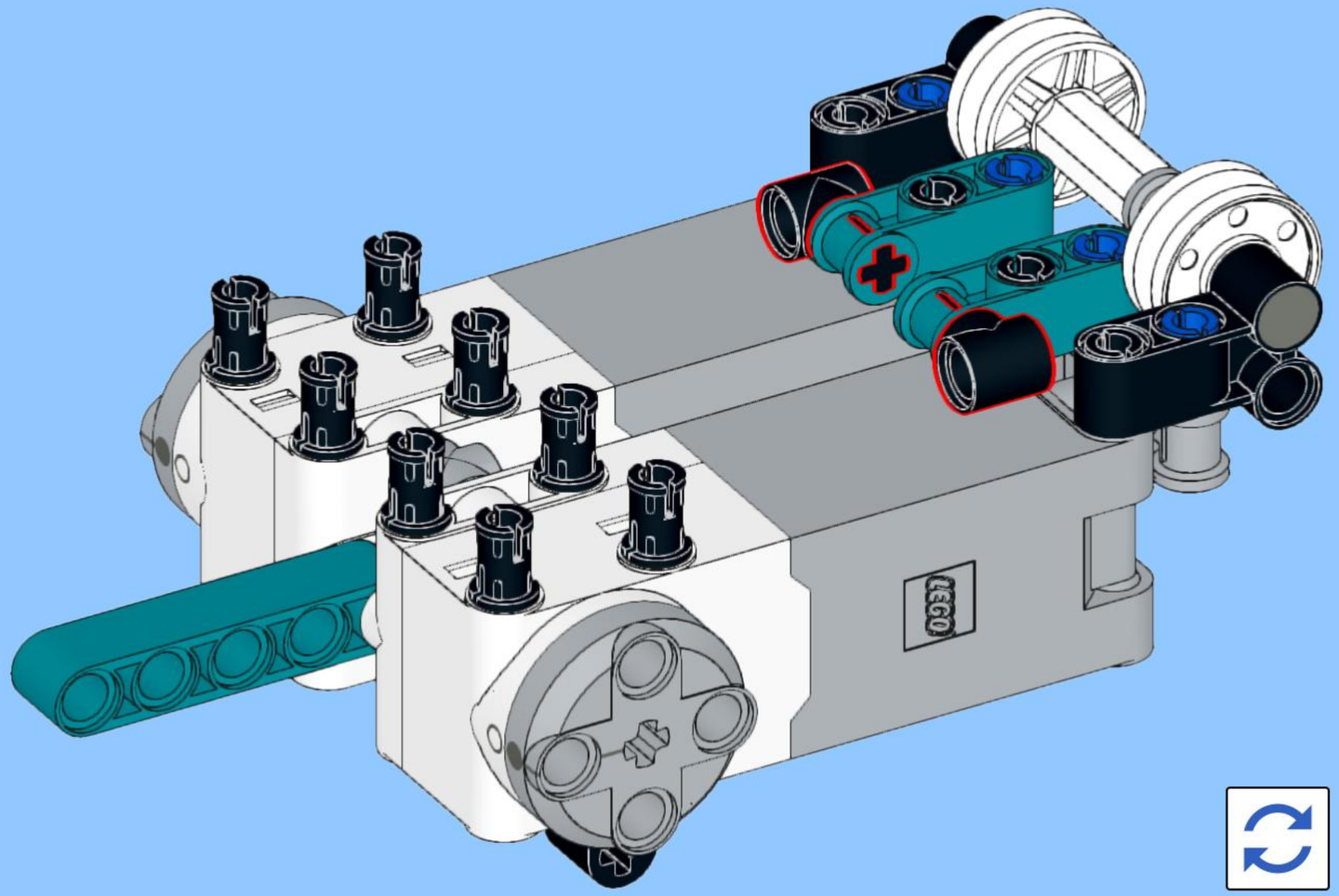

13

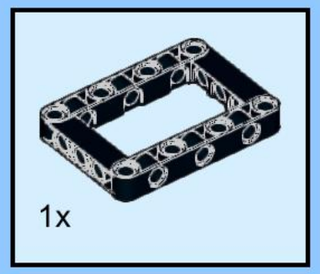

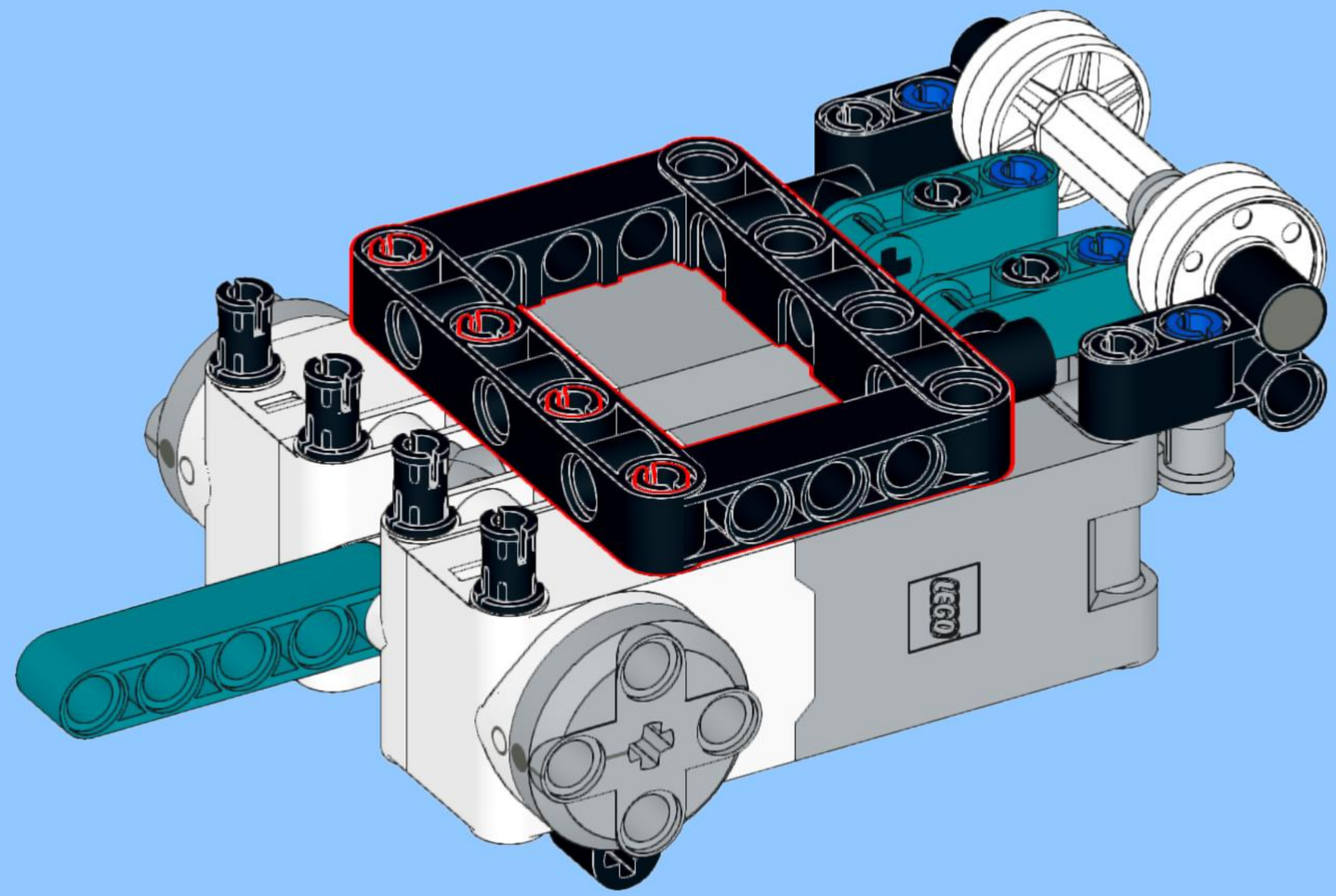

14

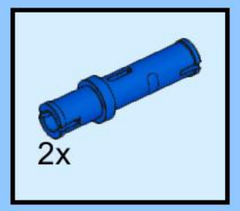

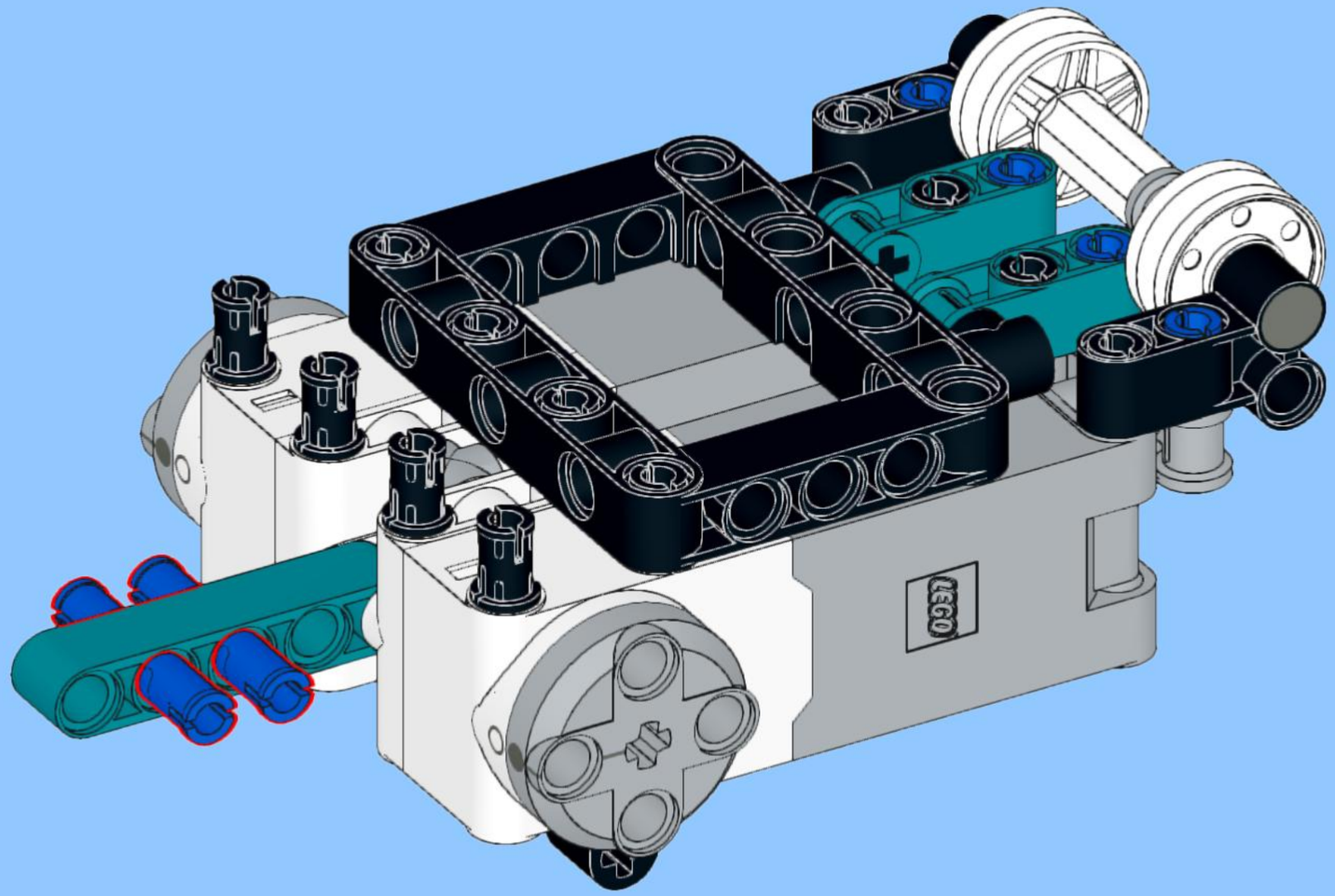

15

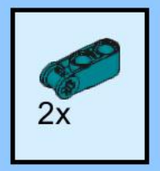

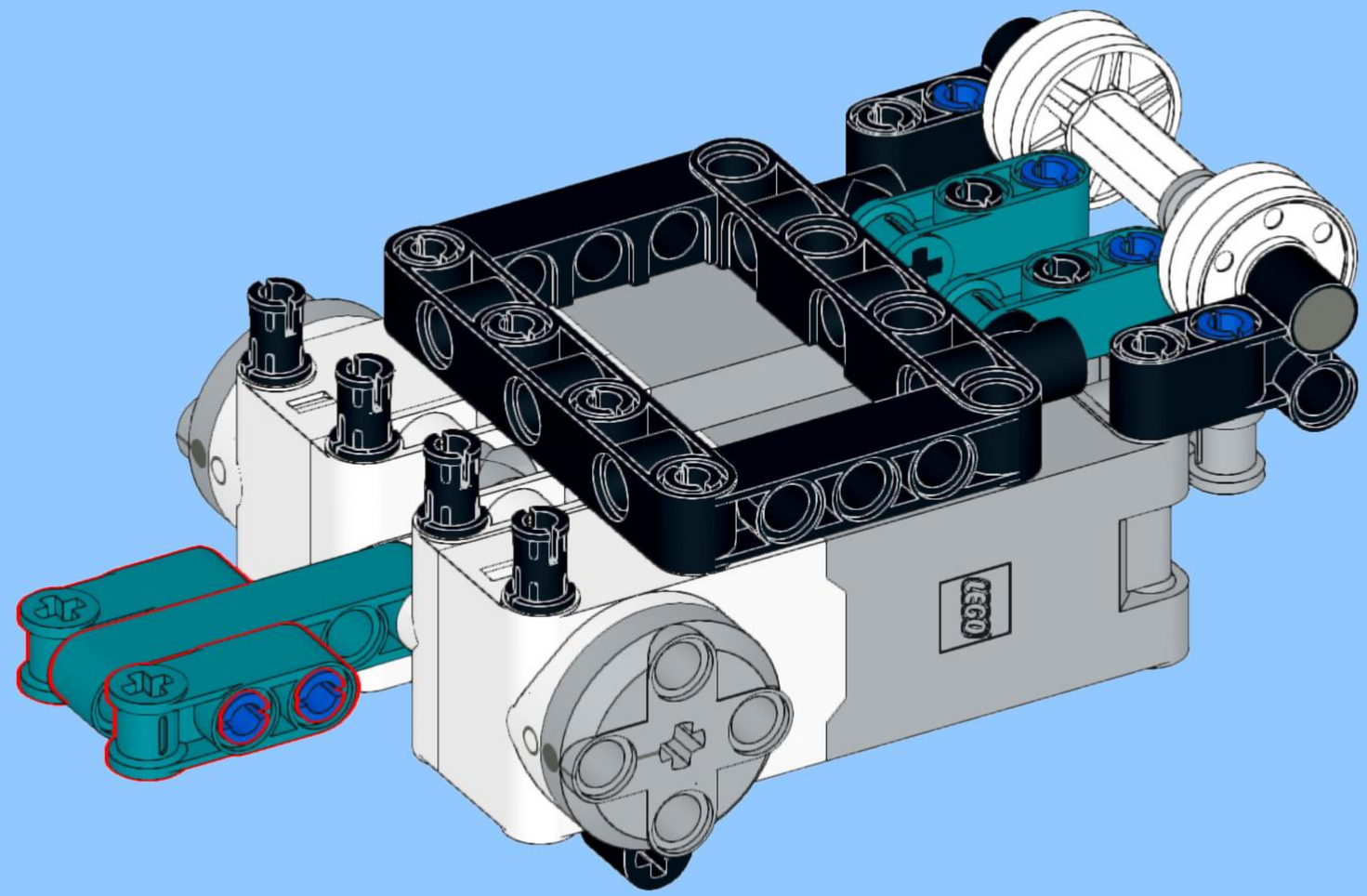

16

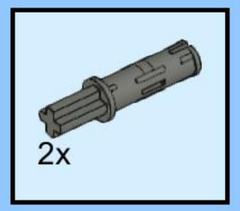

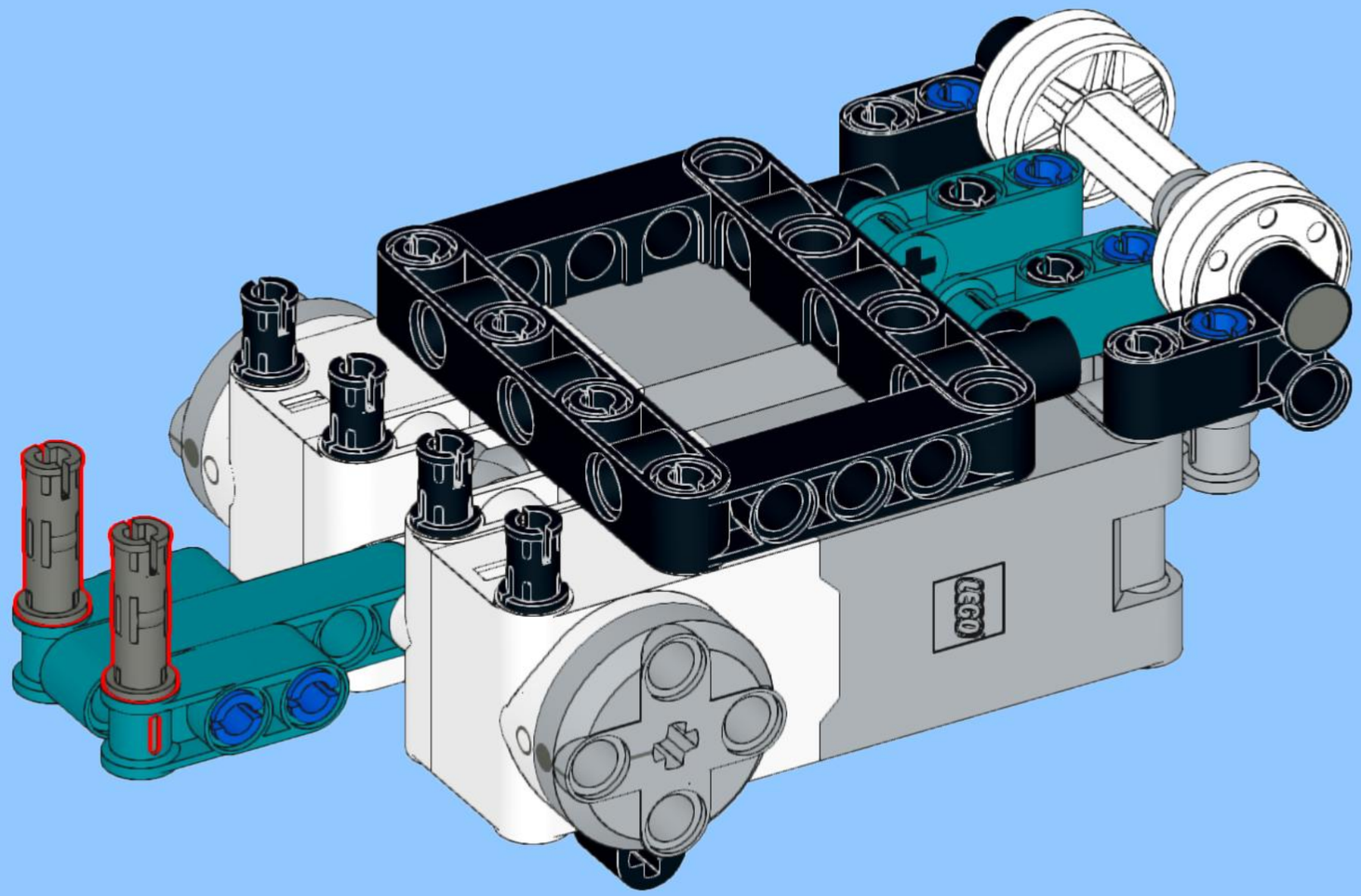

17

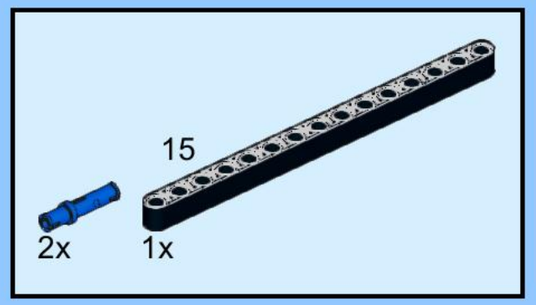

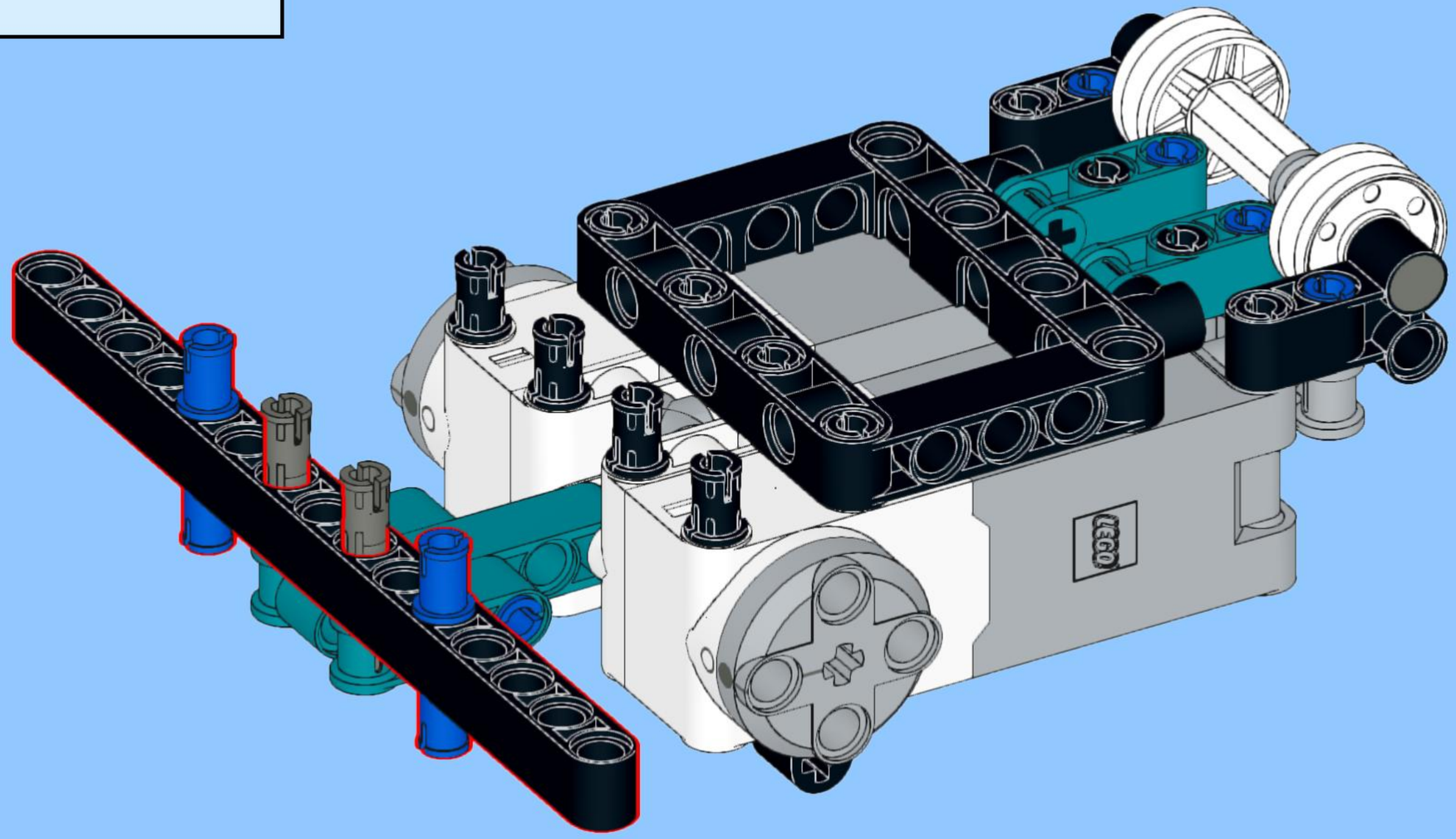

18

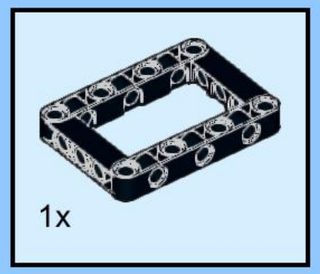

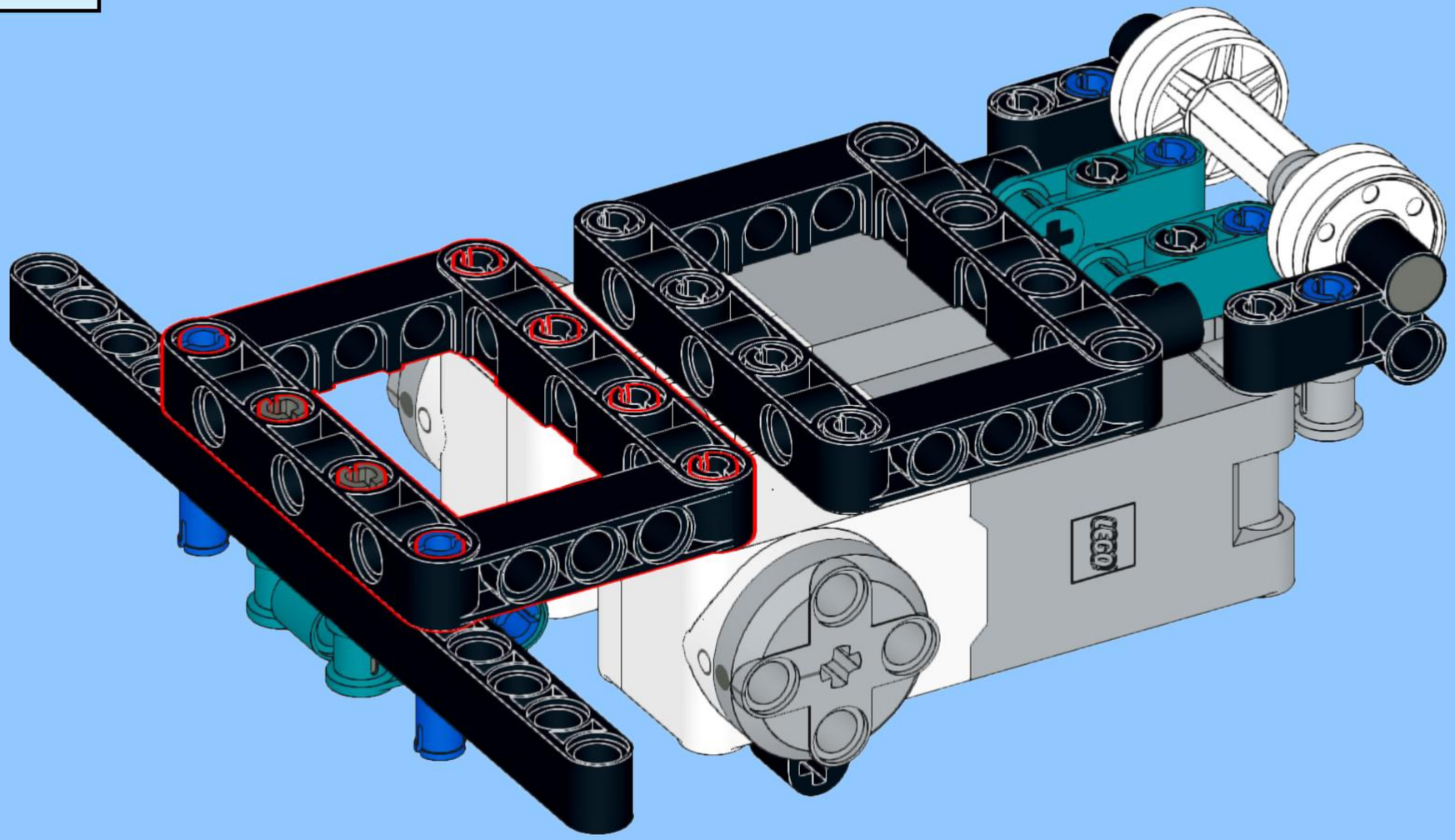

19

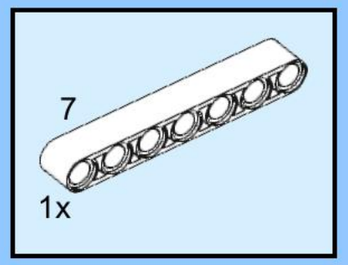

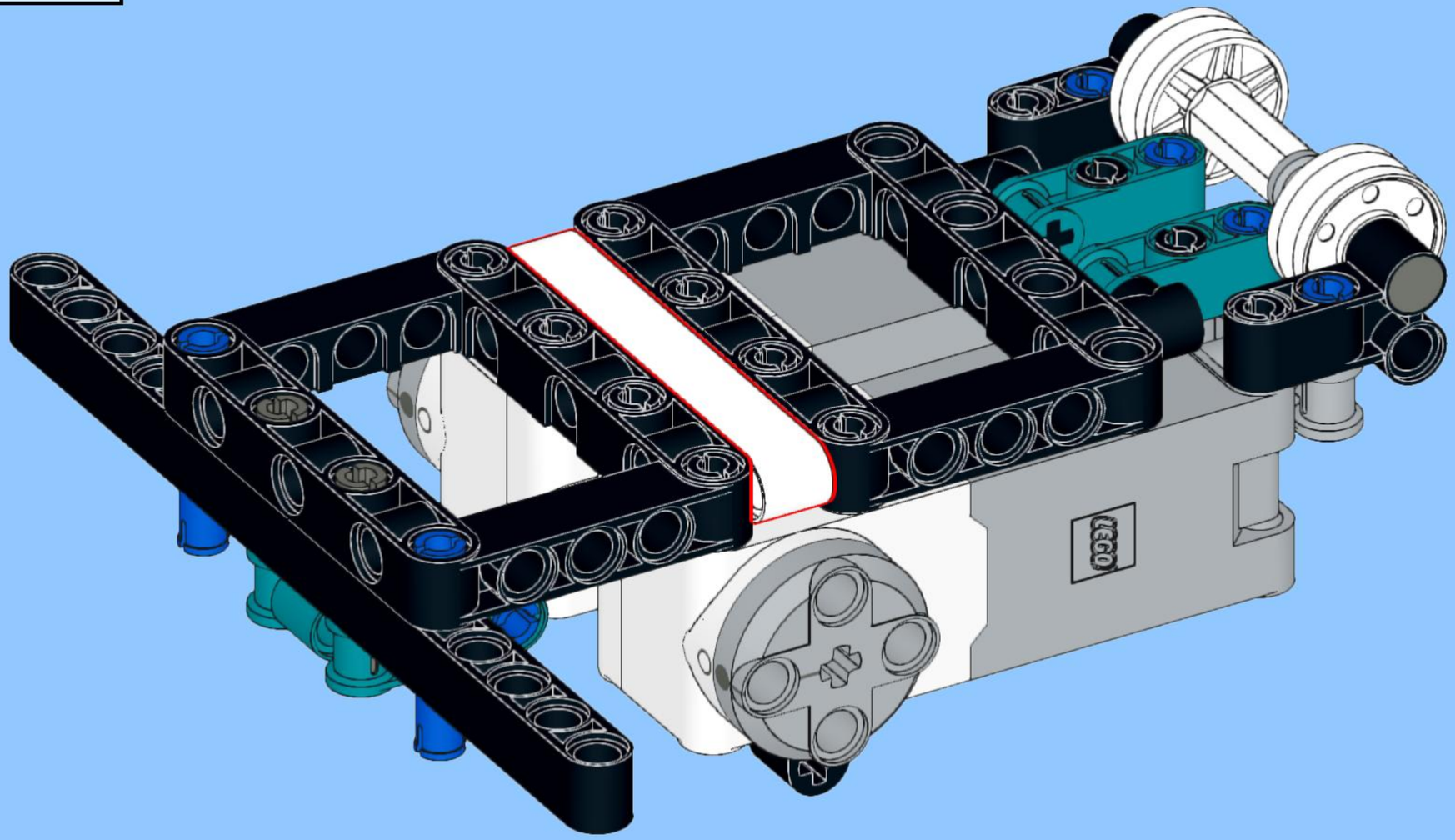

20

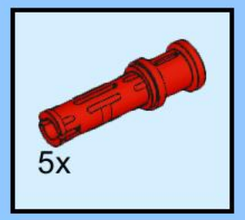

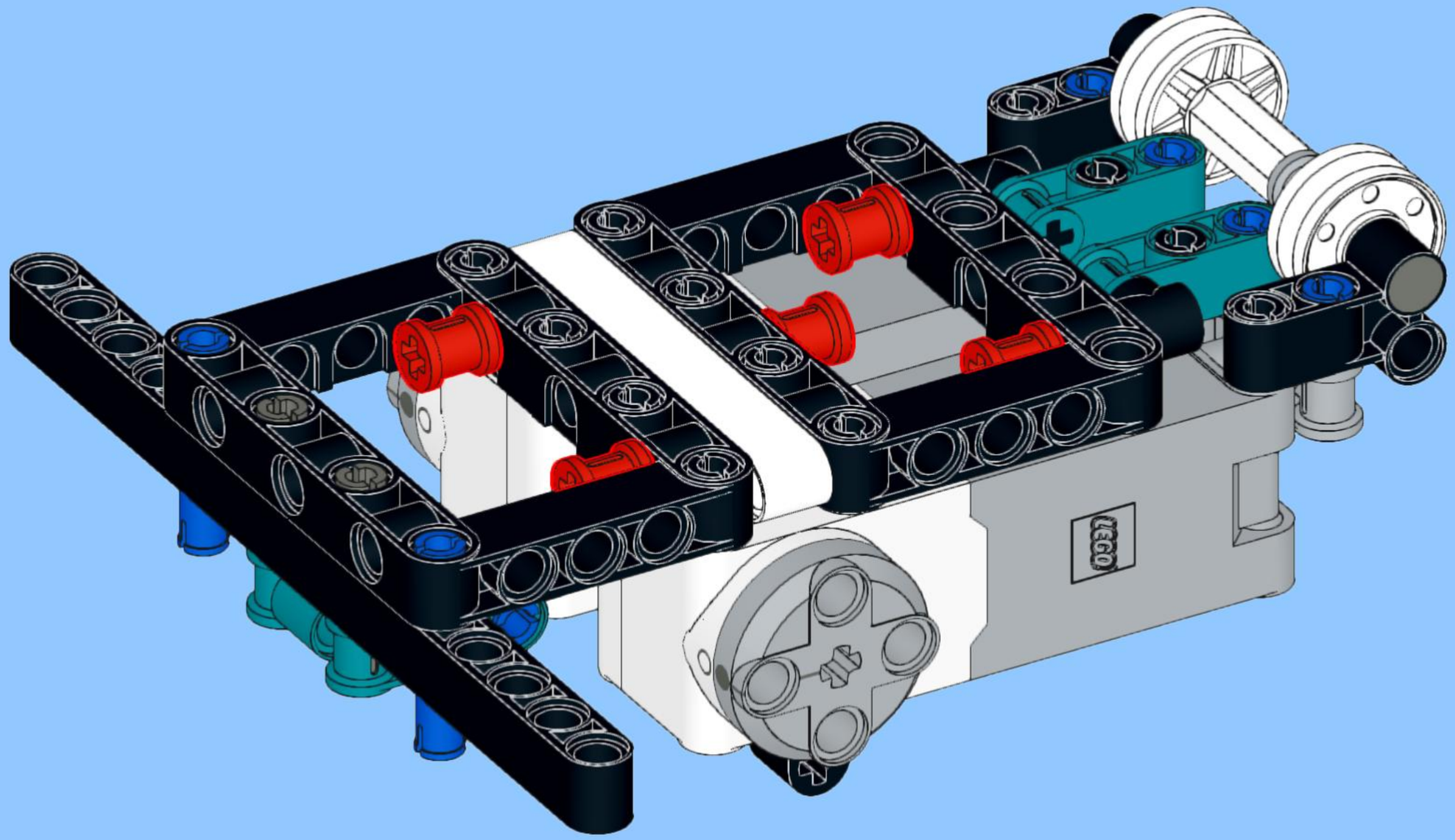

21

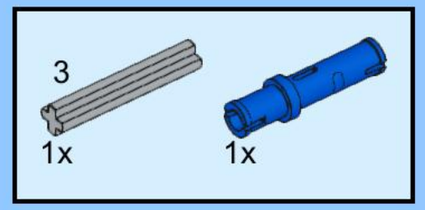

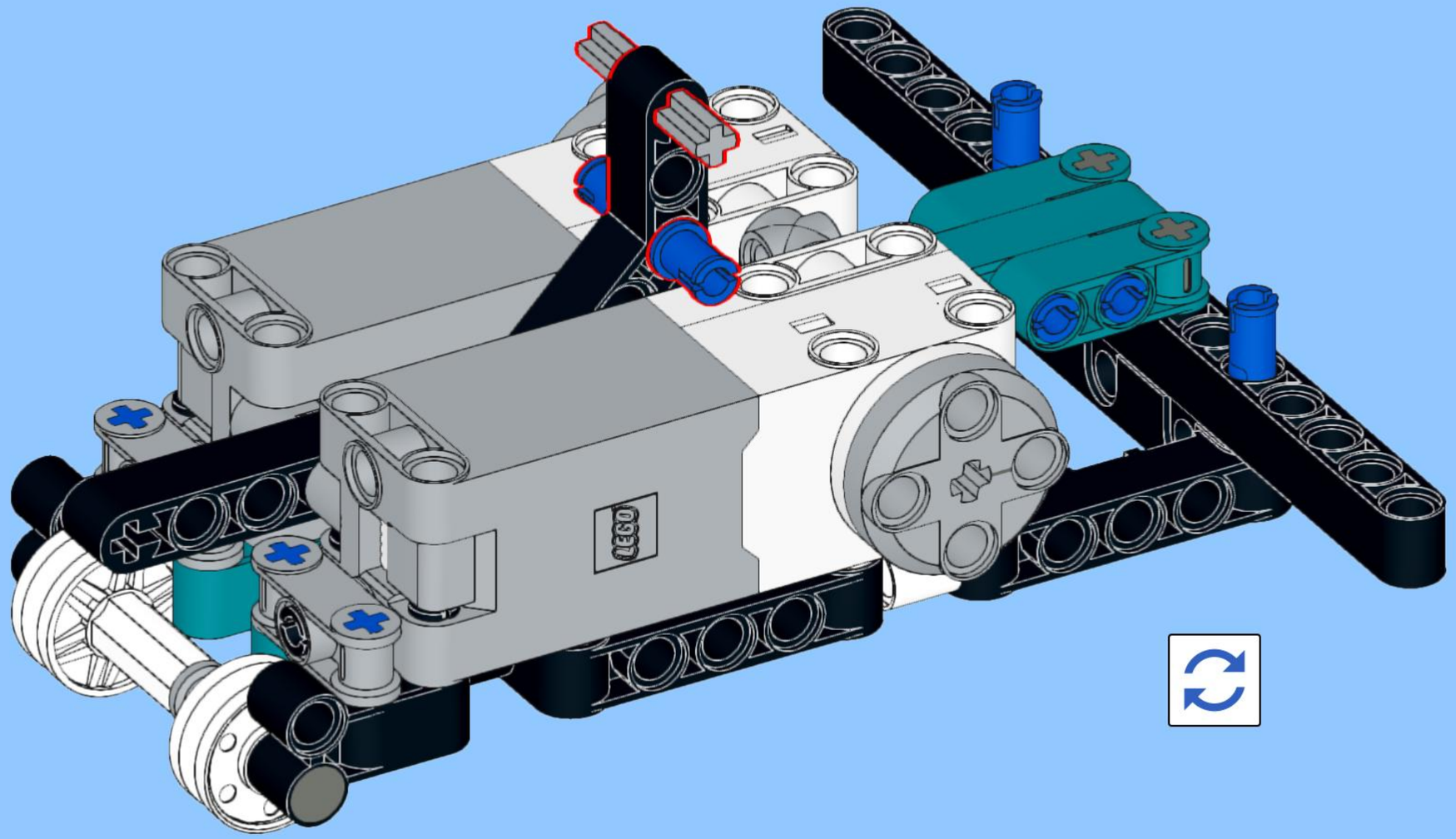

22

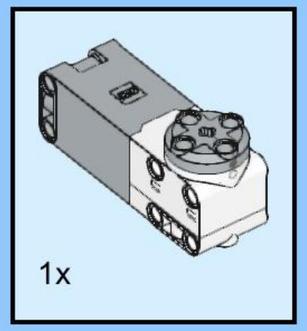

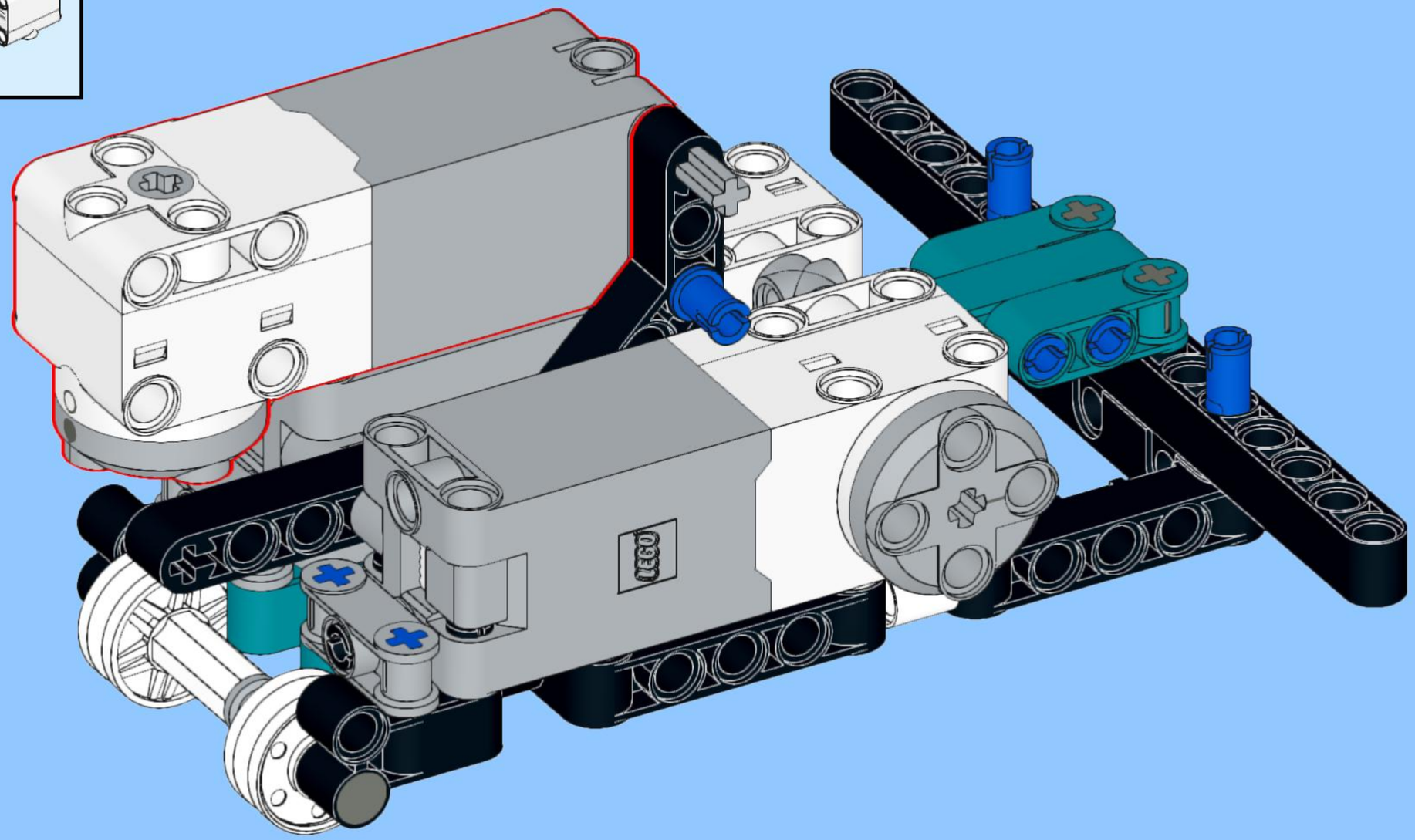

23

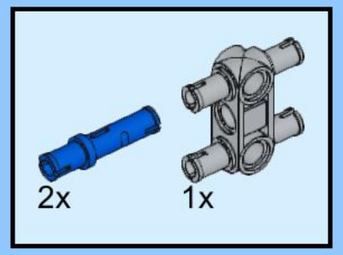

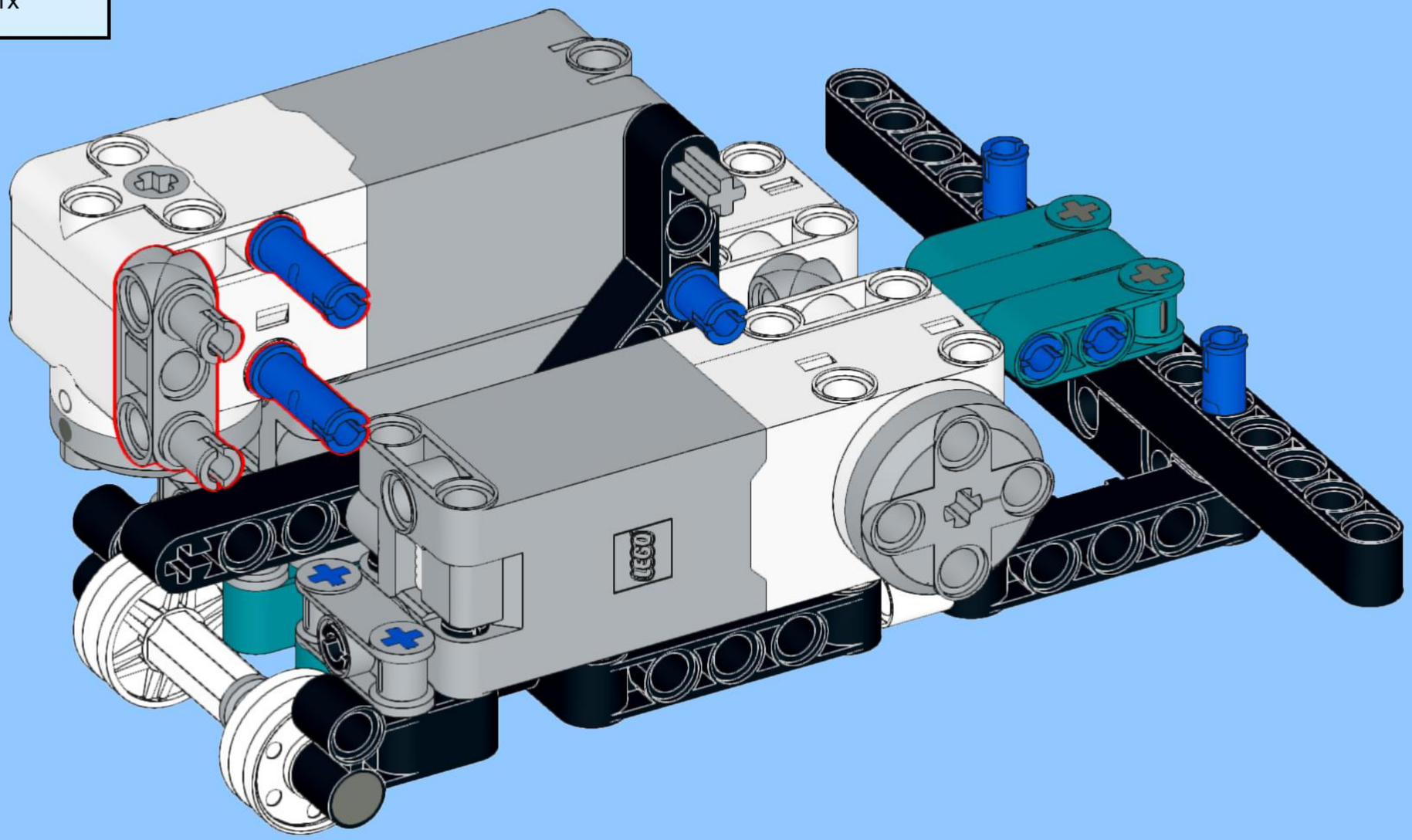

24

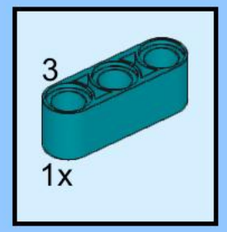

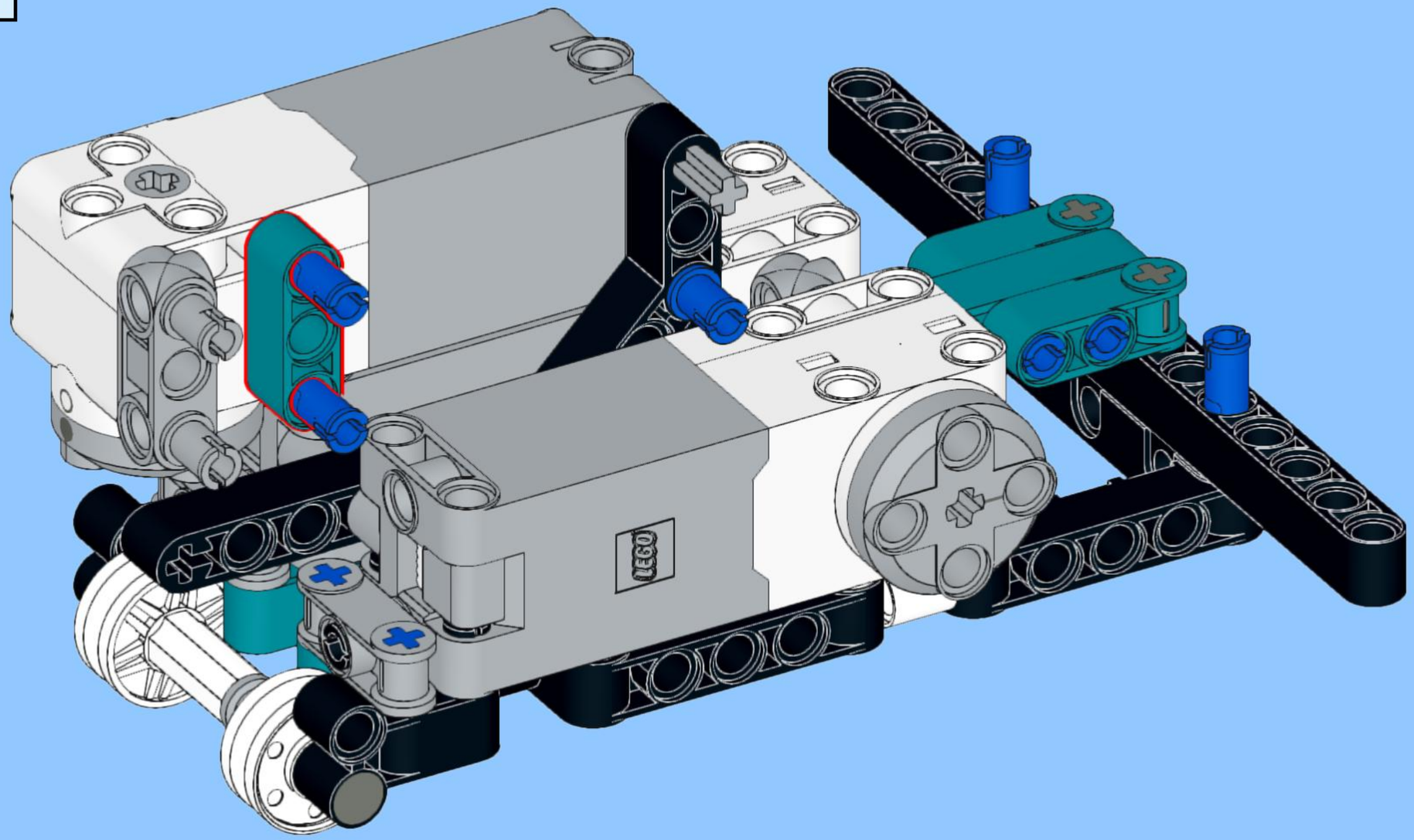

25

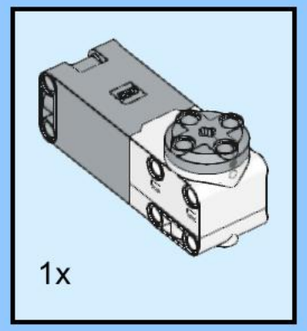

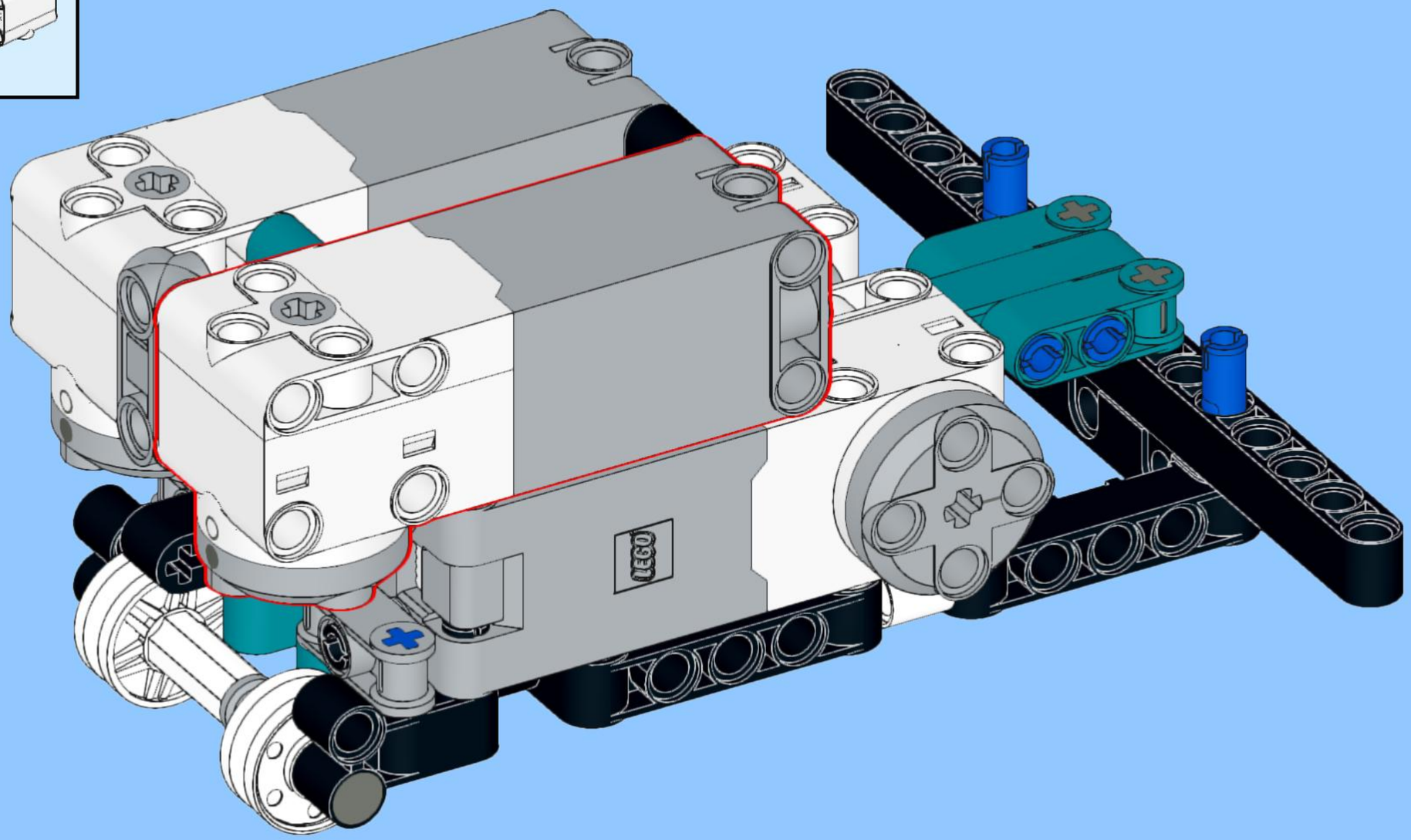

26

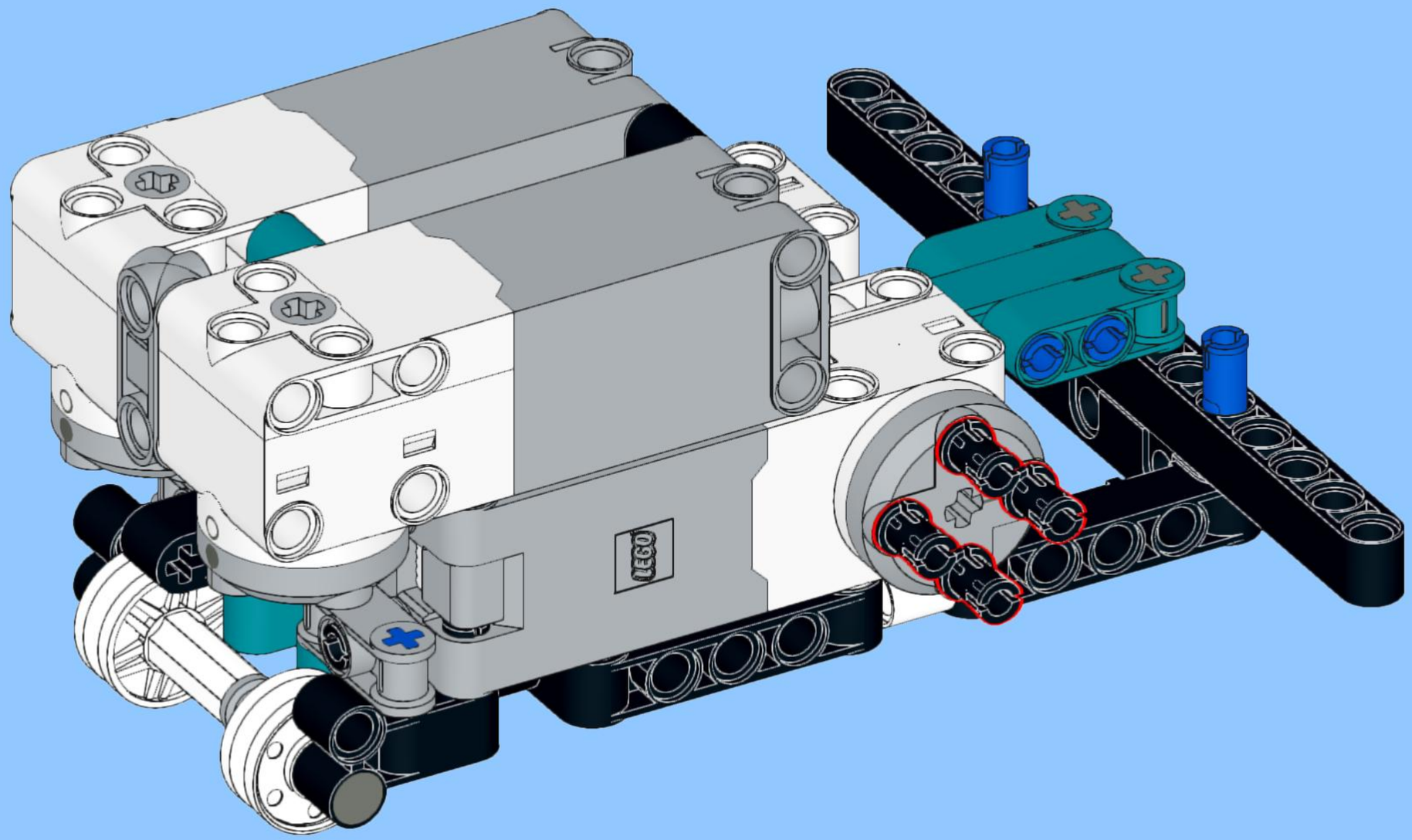

27

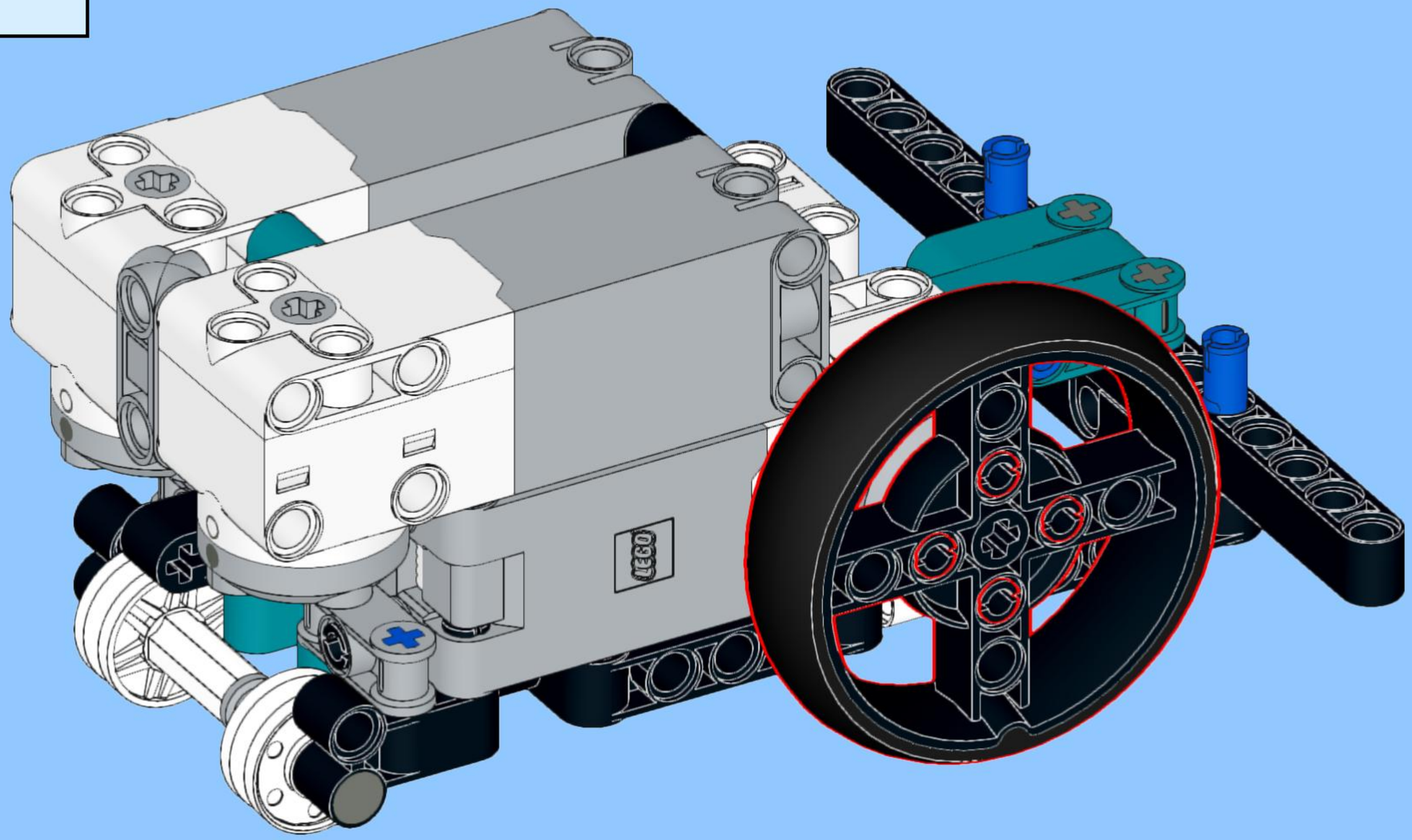

28

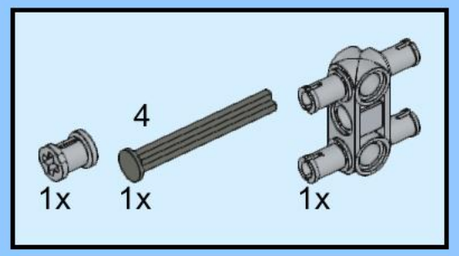

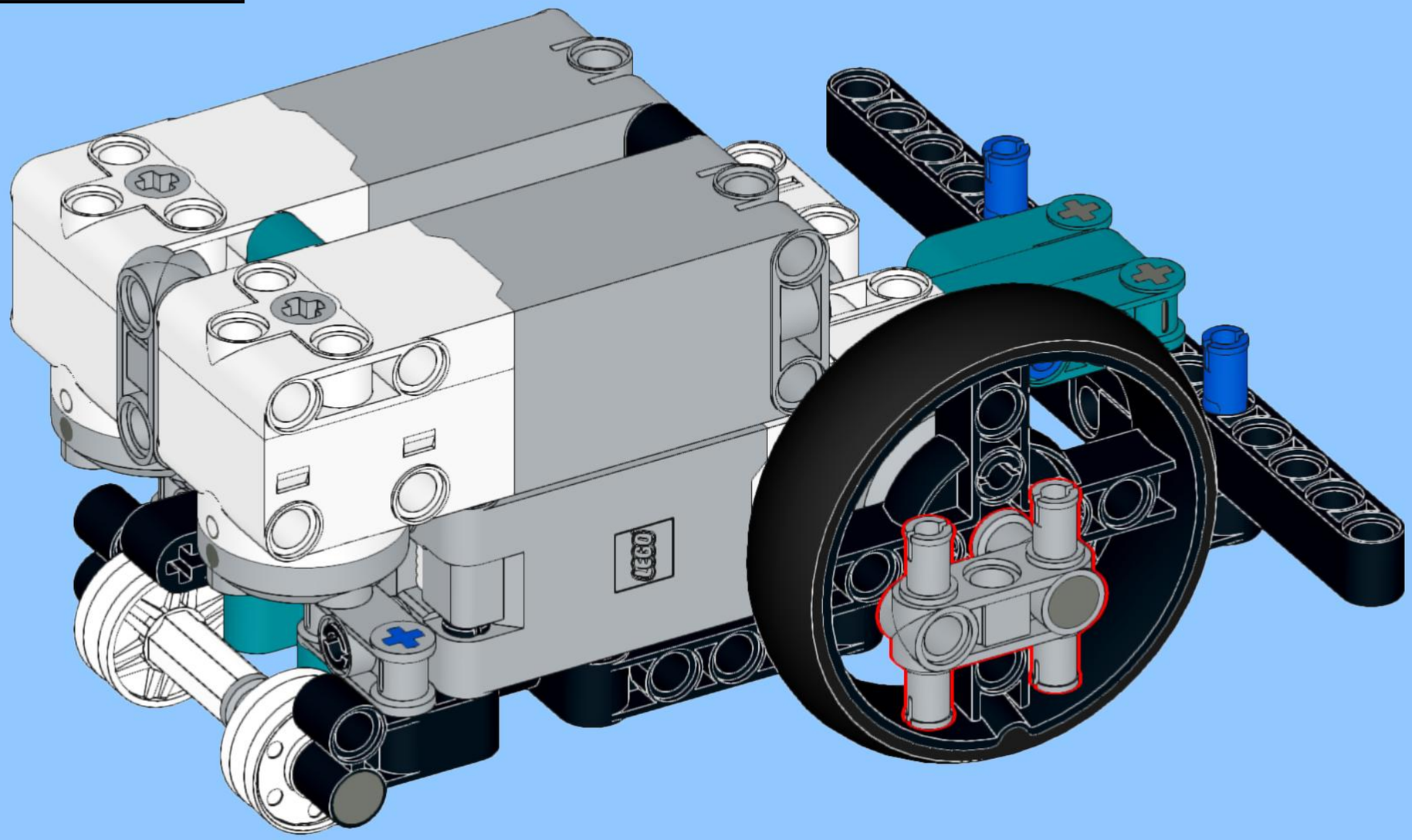

29

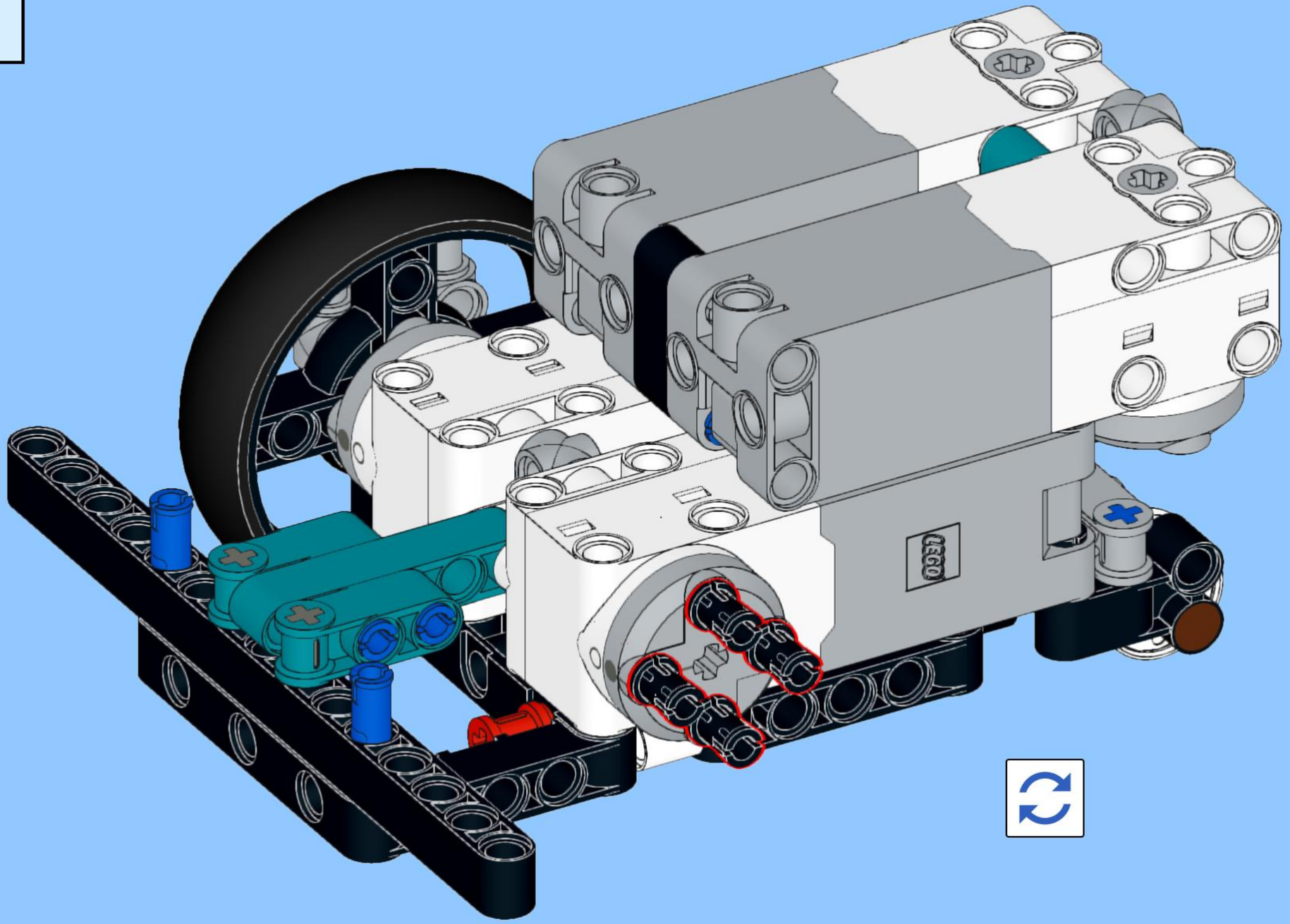

30

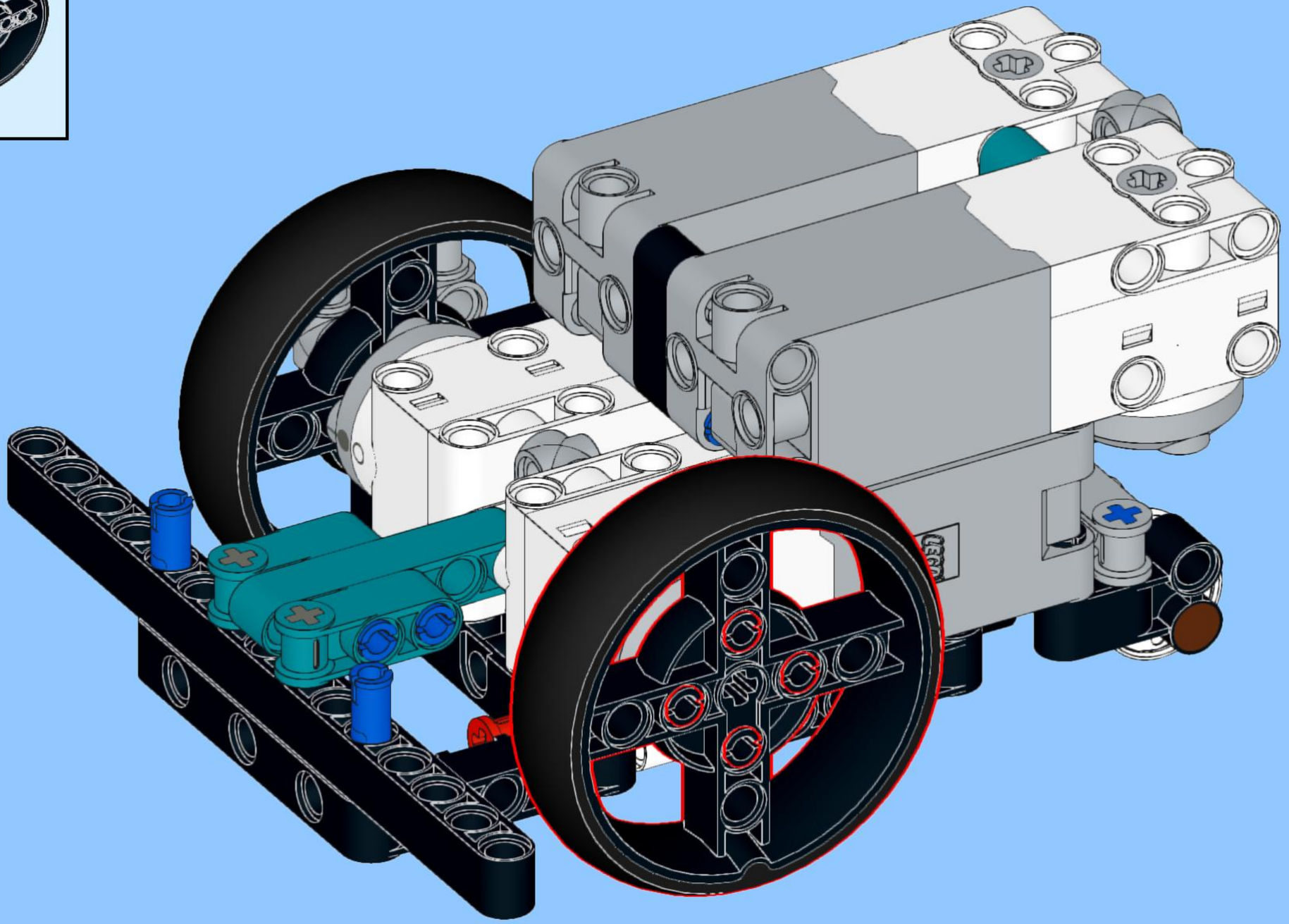

31

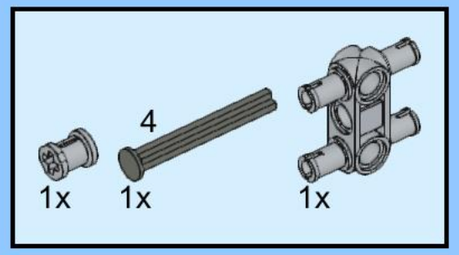

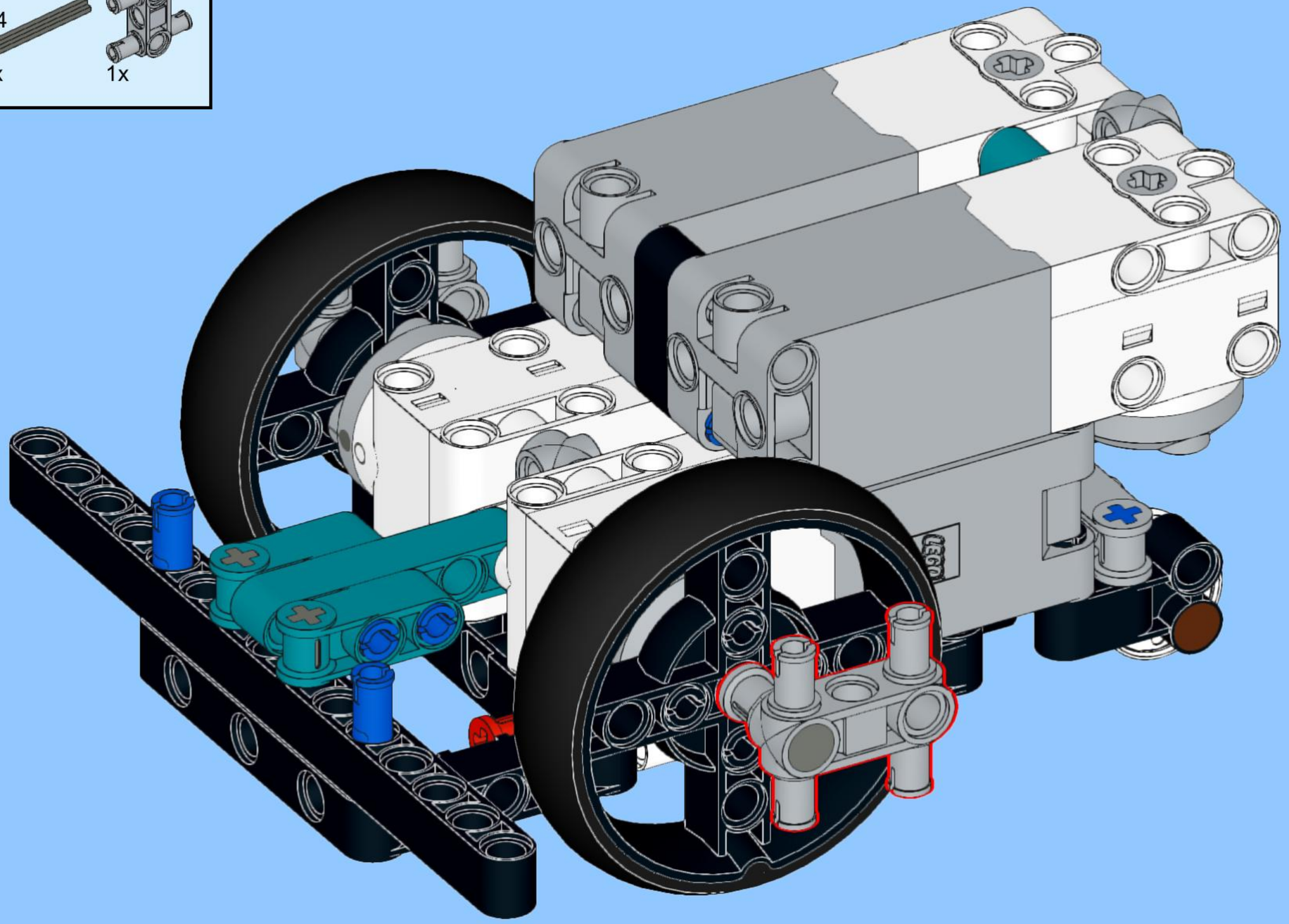

32

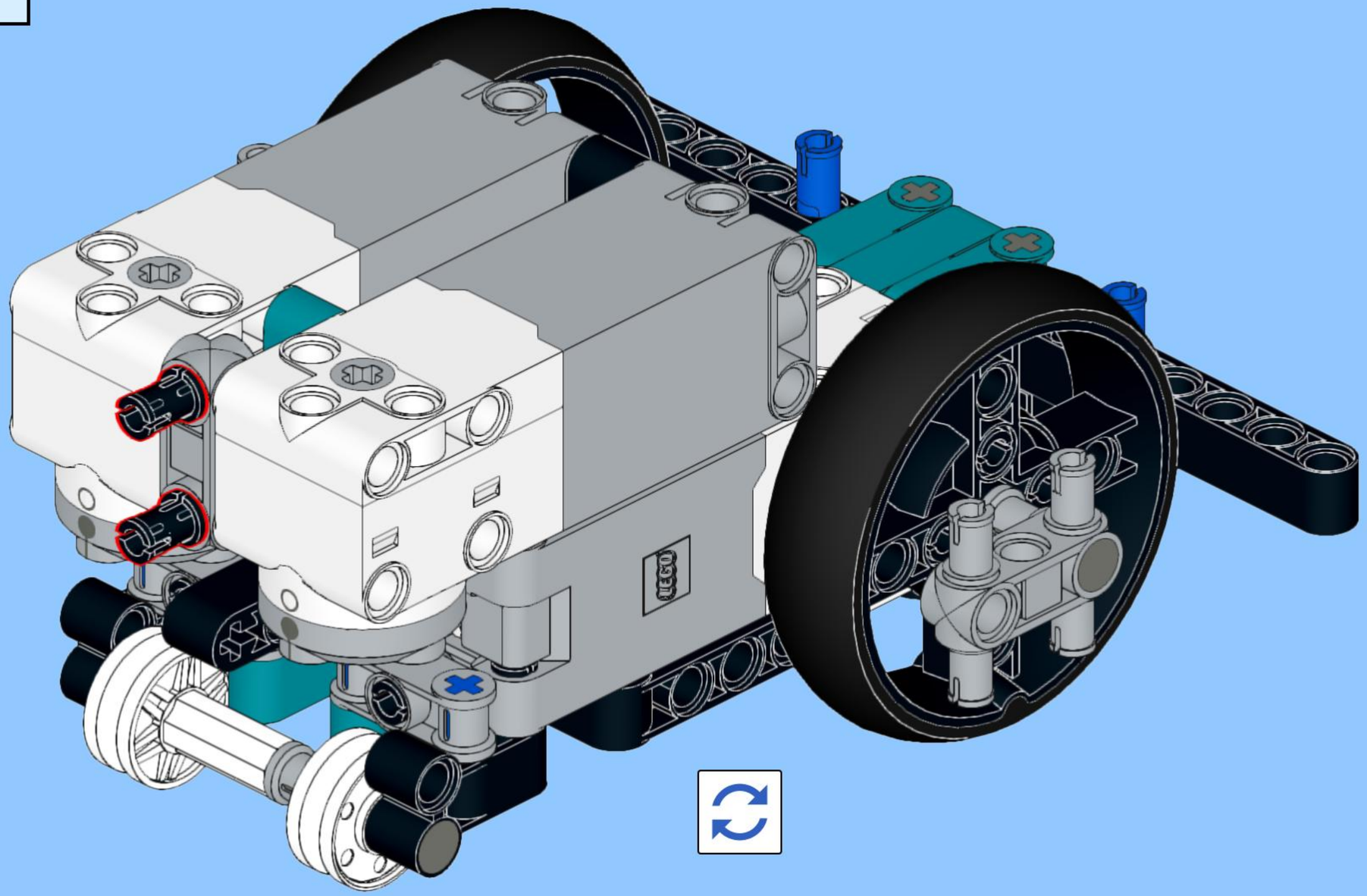

33

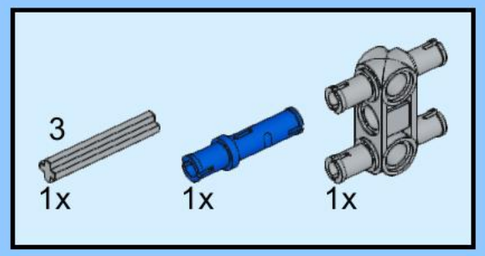

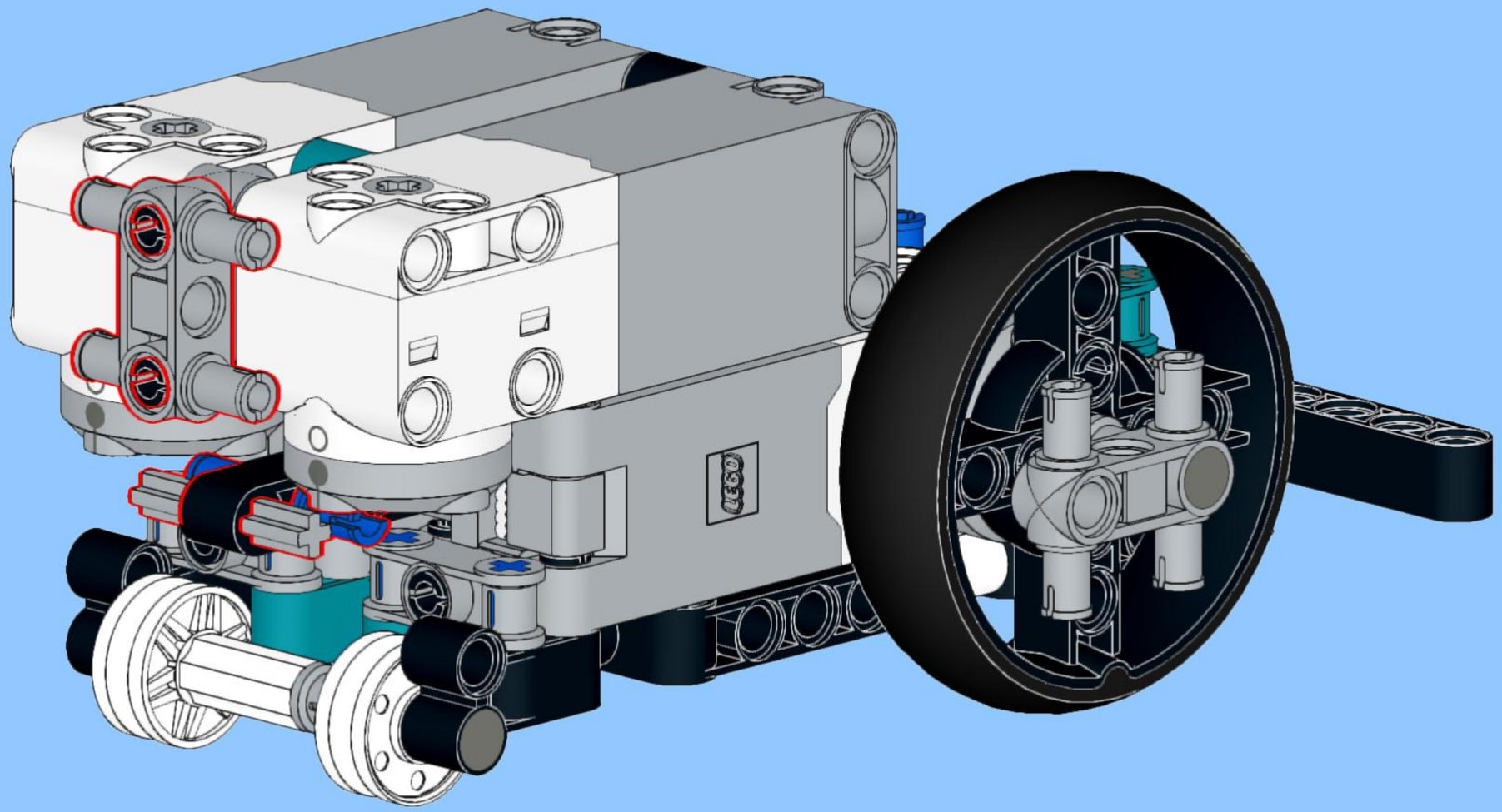

34

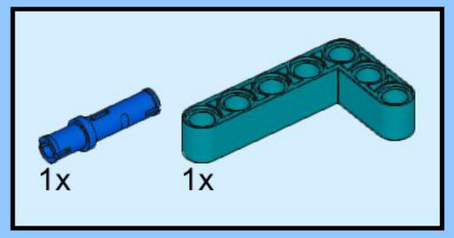

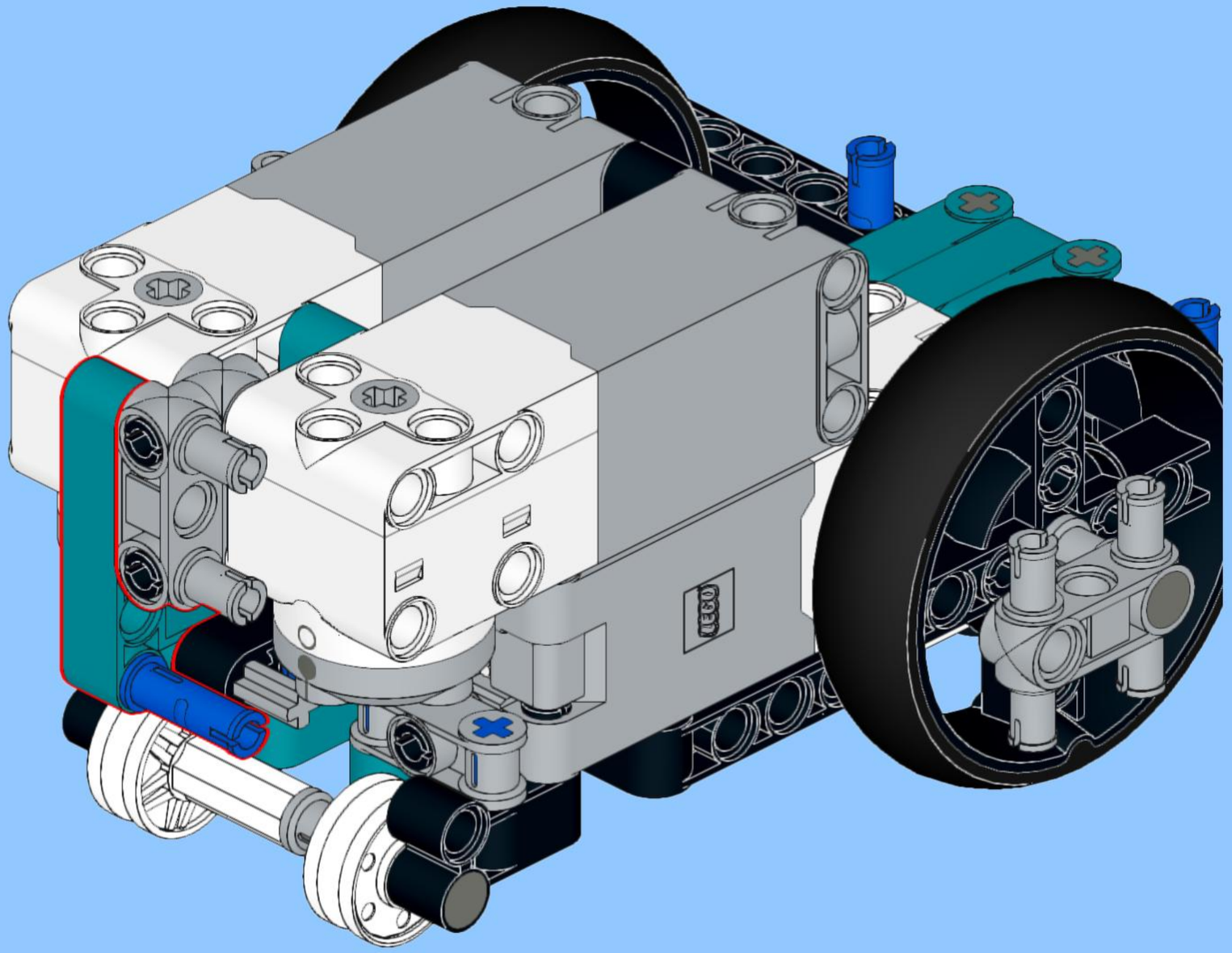

35

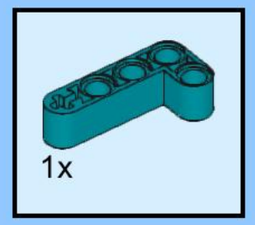

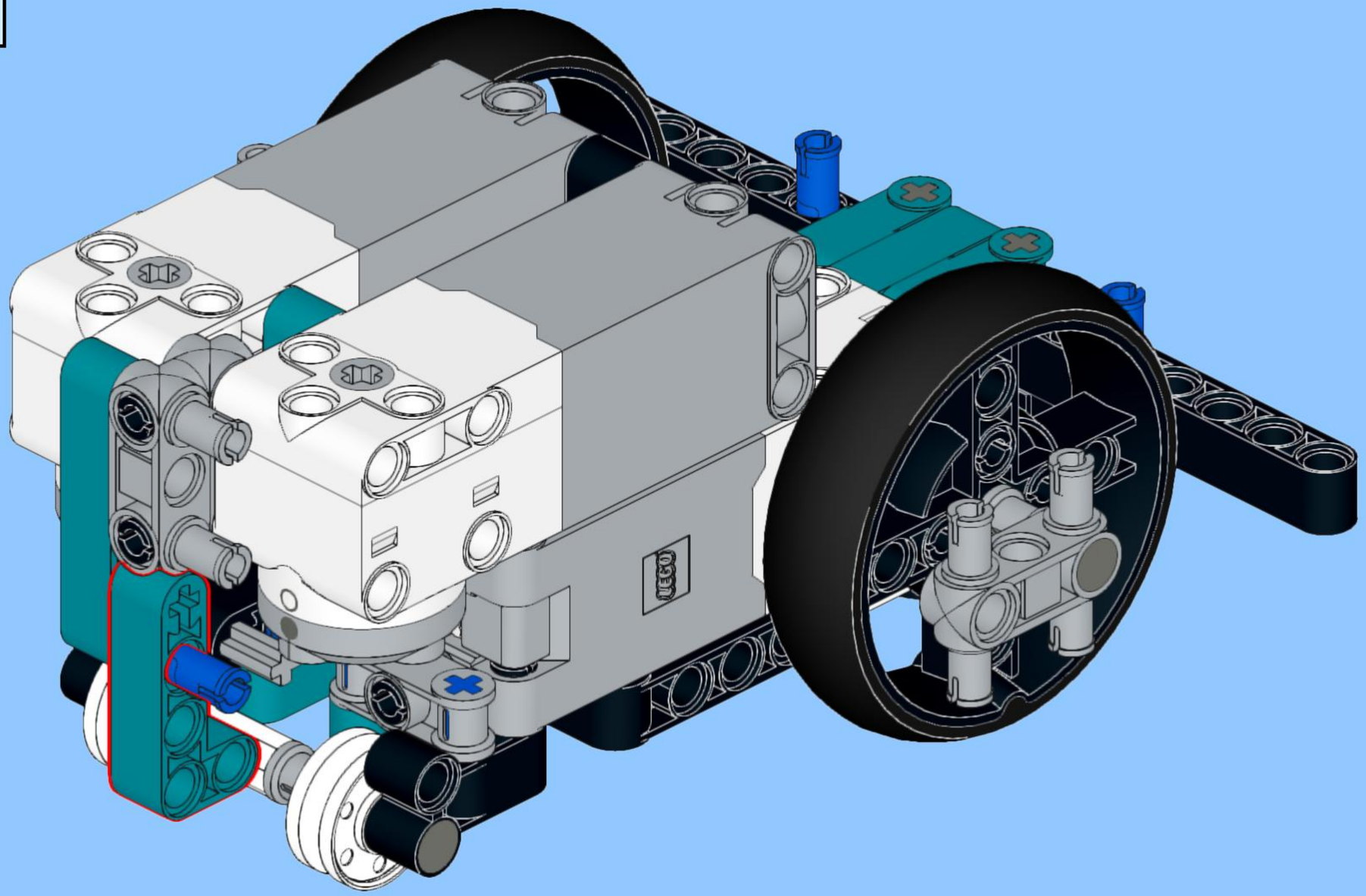

36

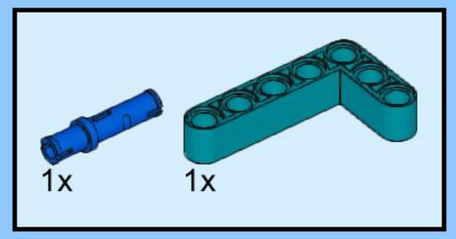

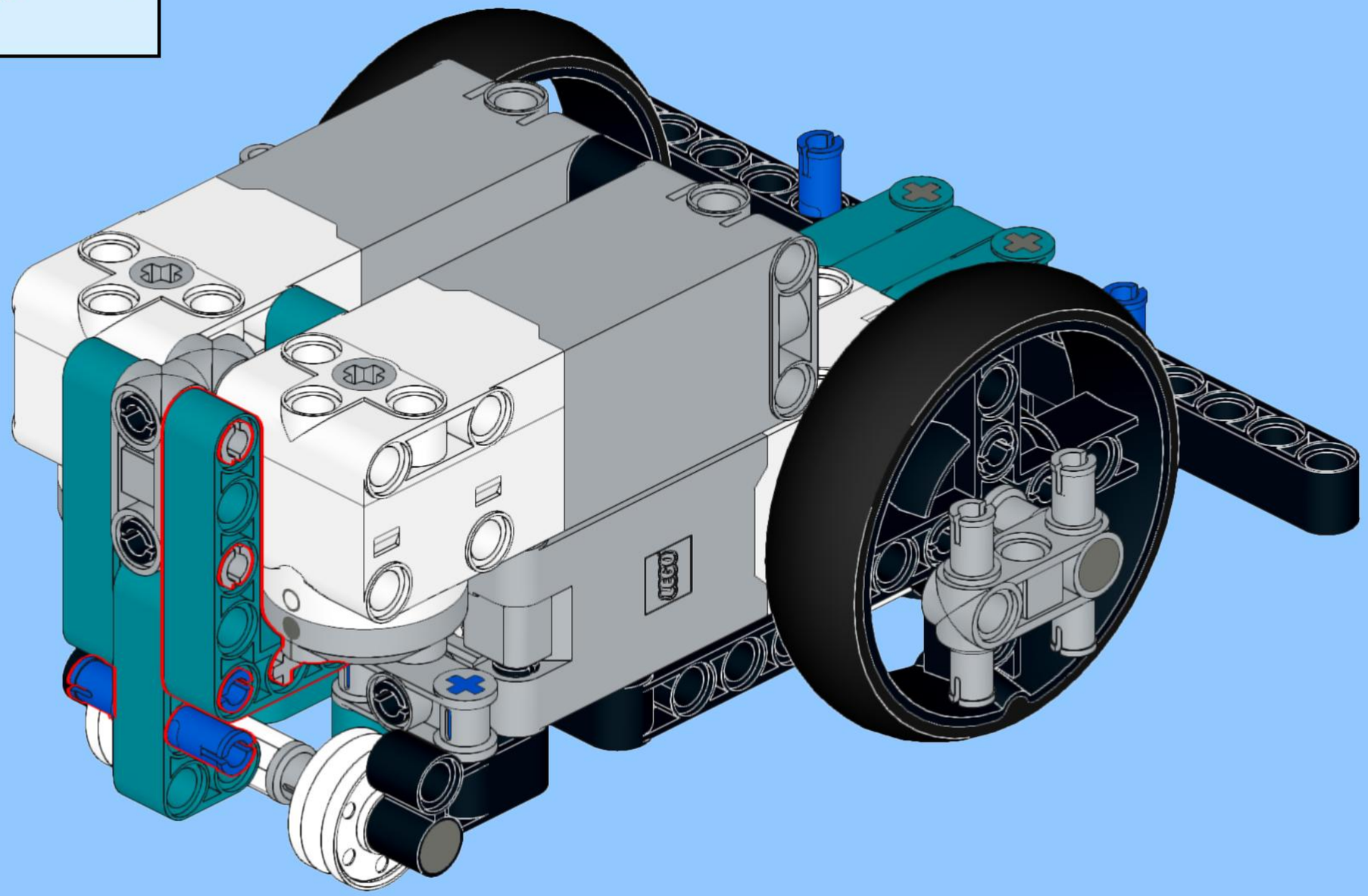

37

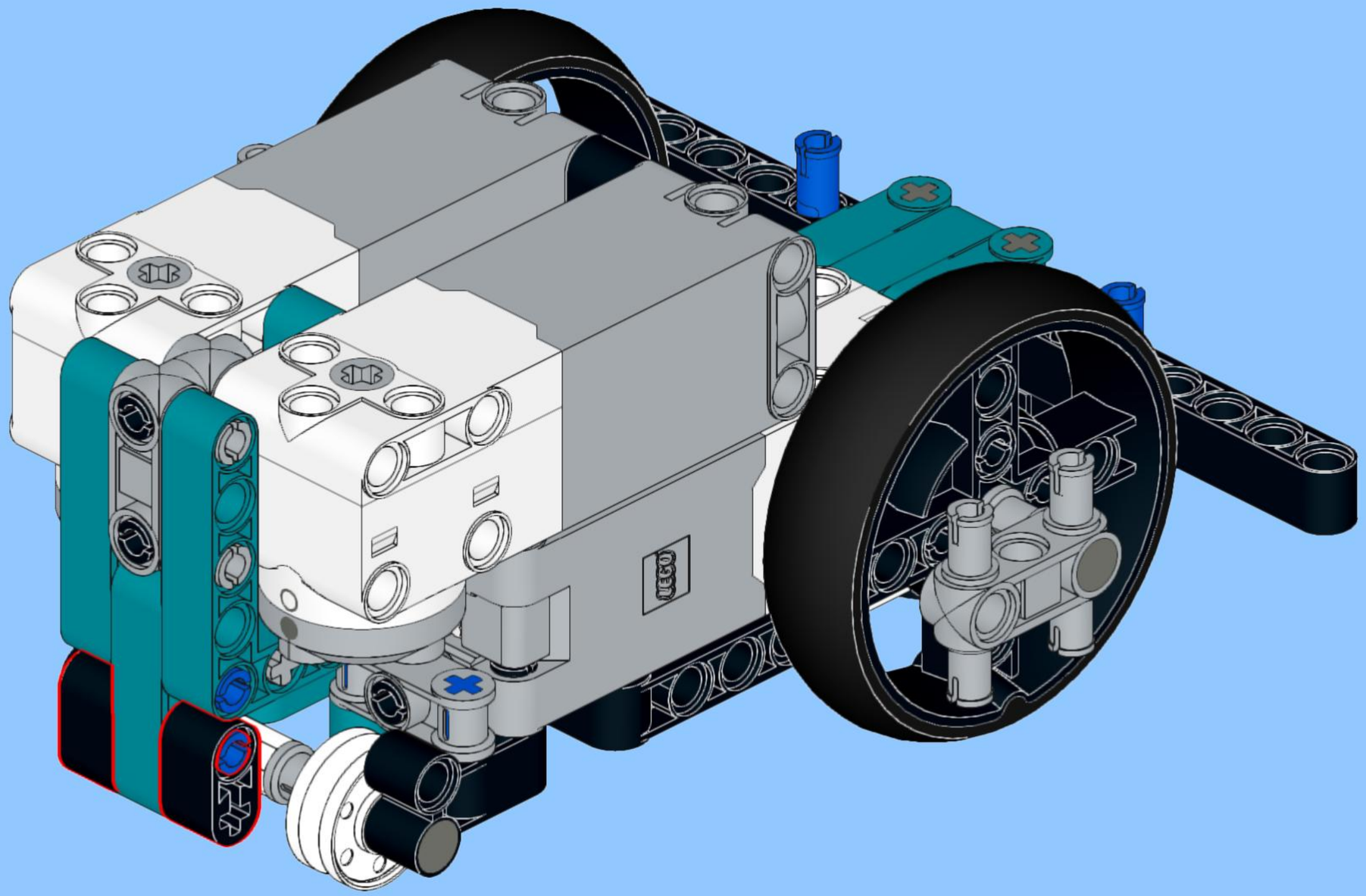

38

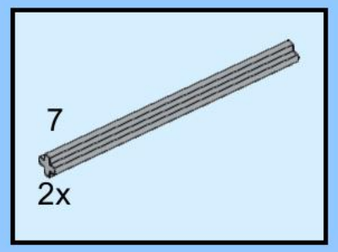

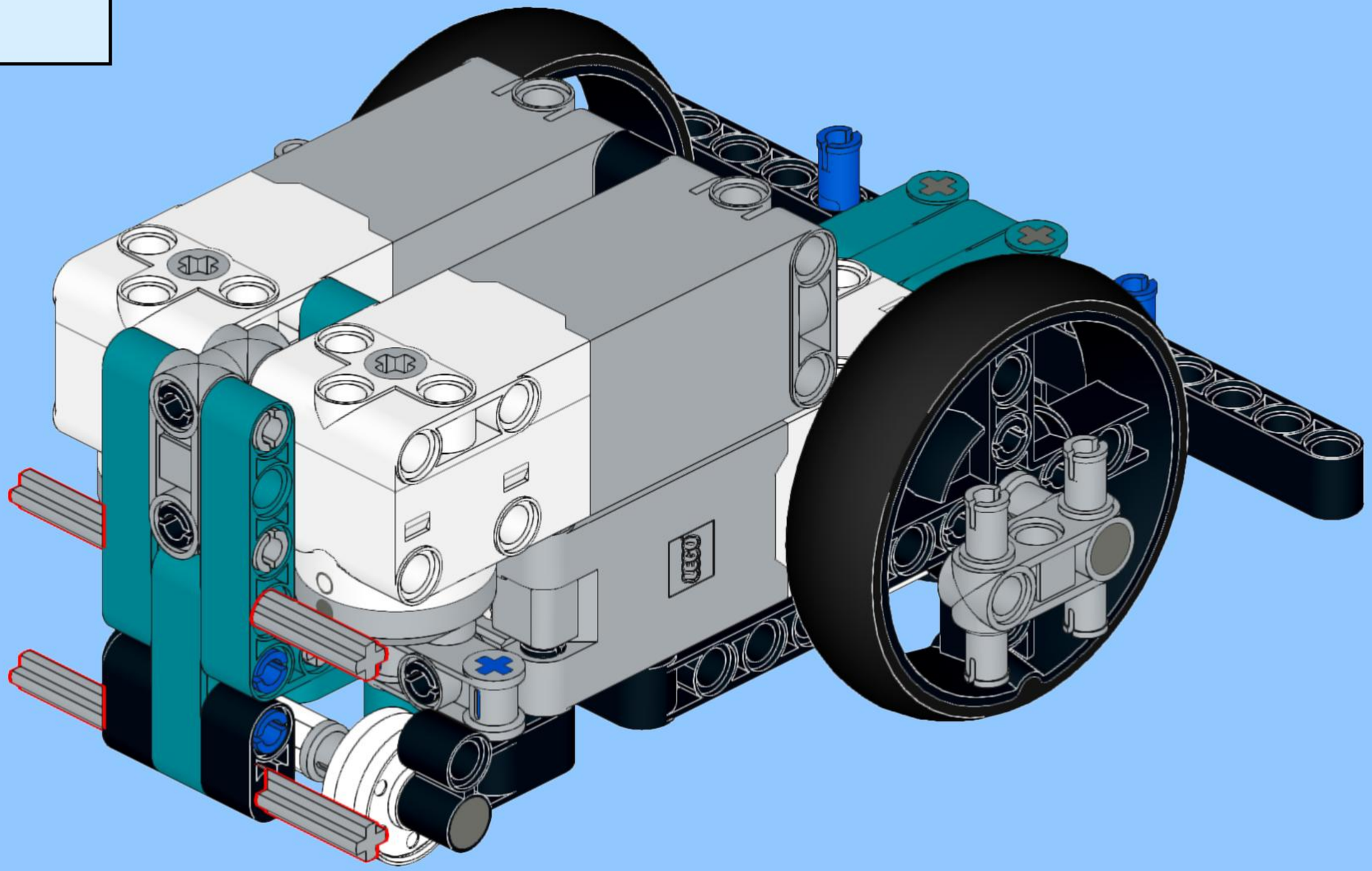

39

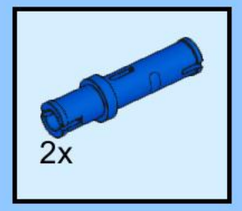

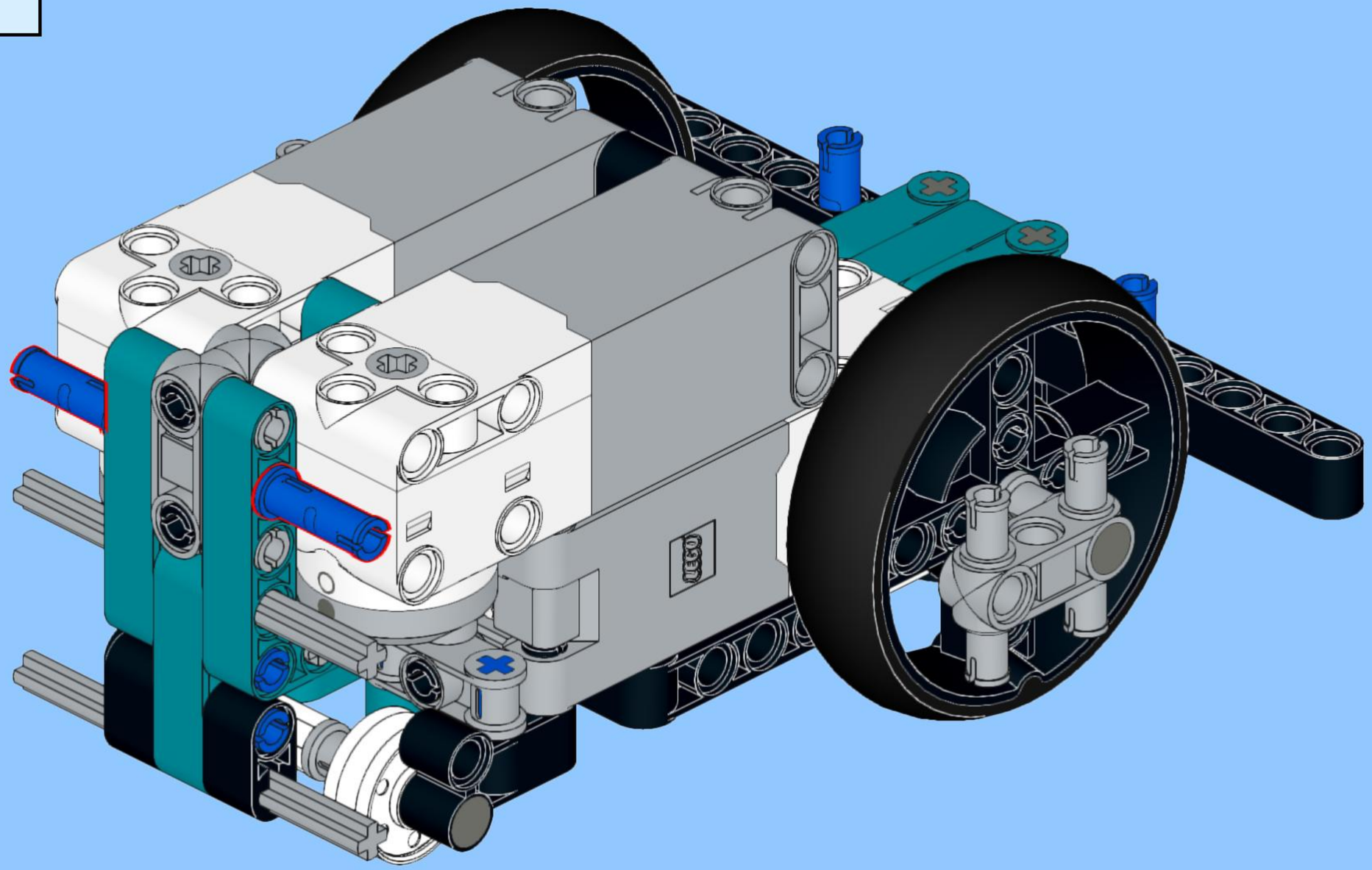

40

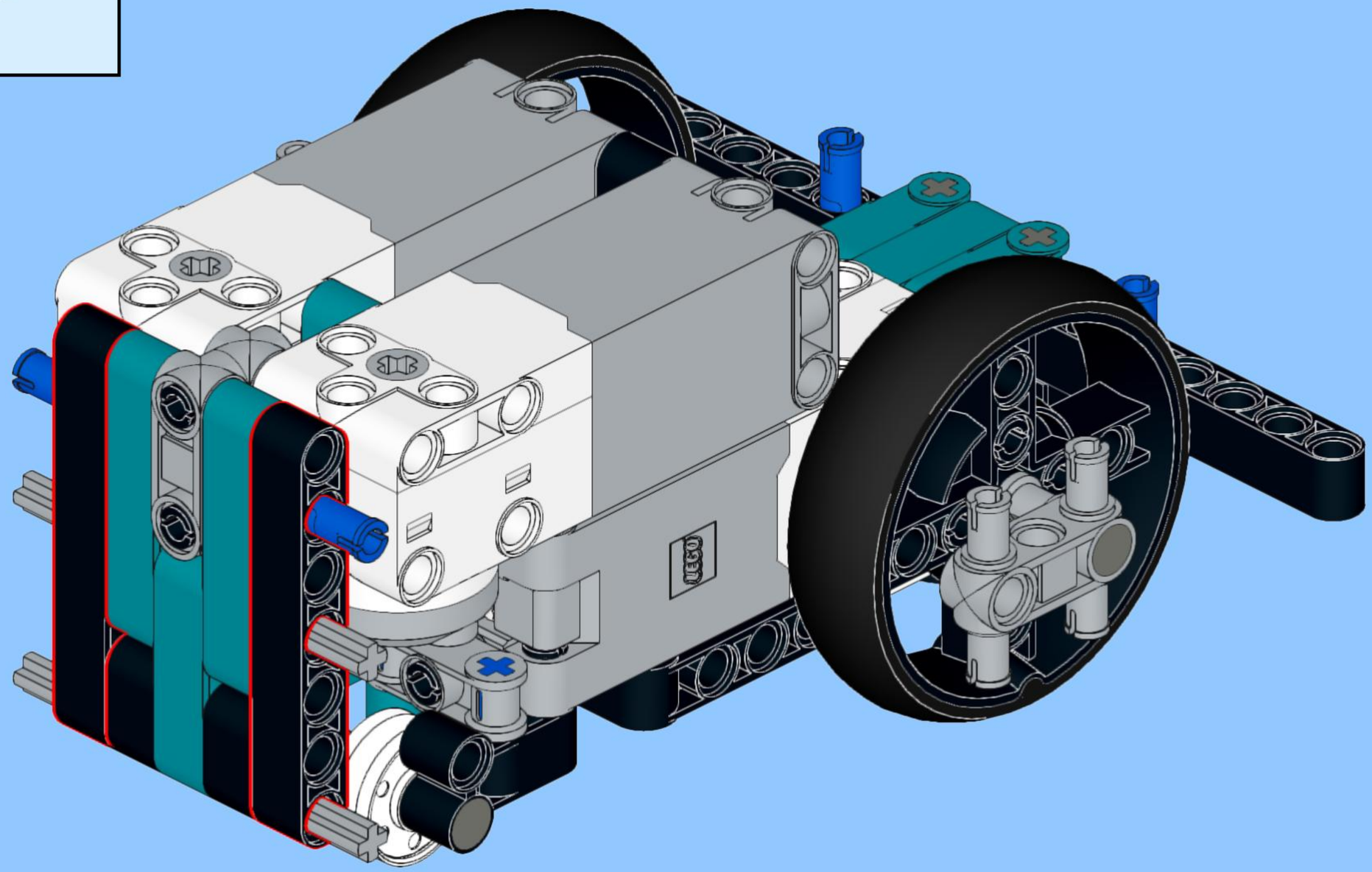

41

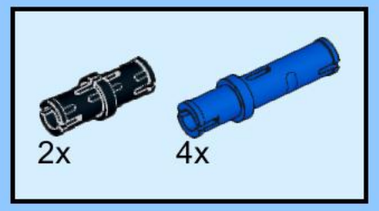

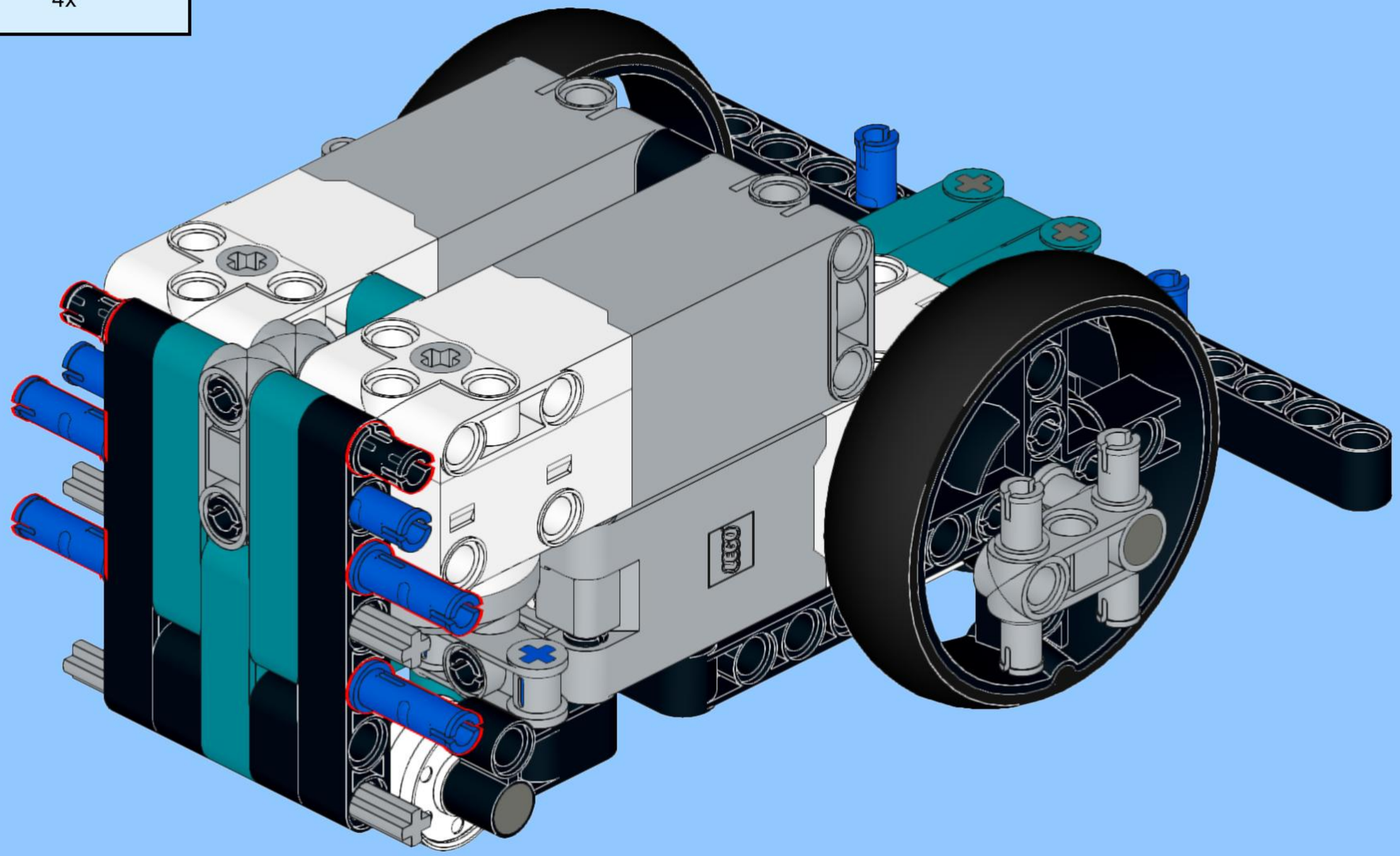

42

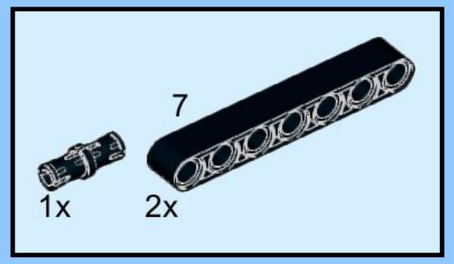

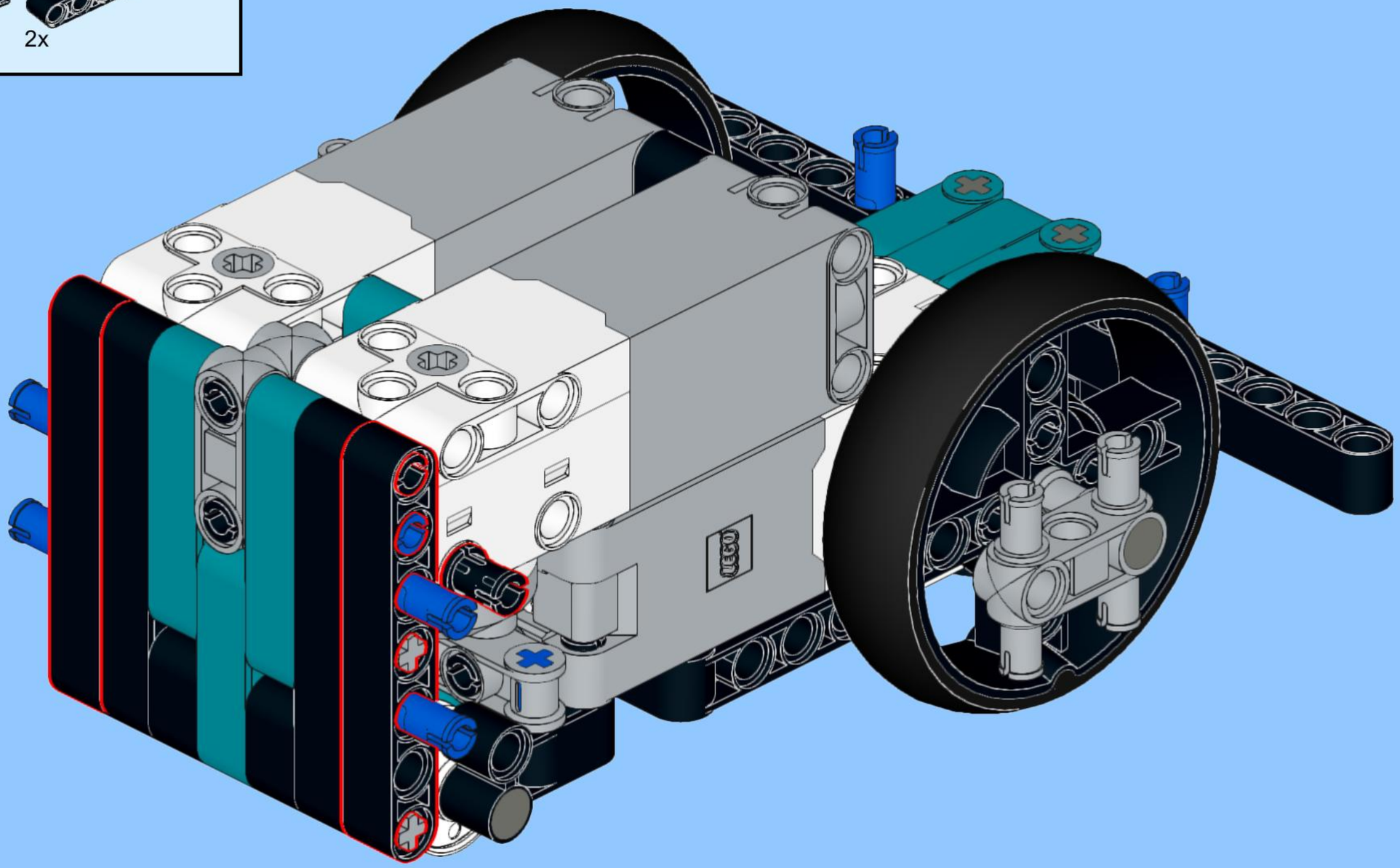

43

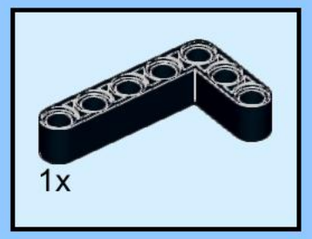

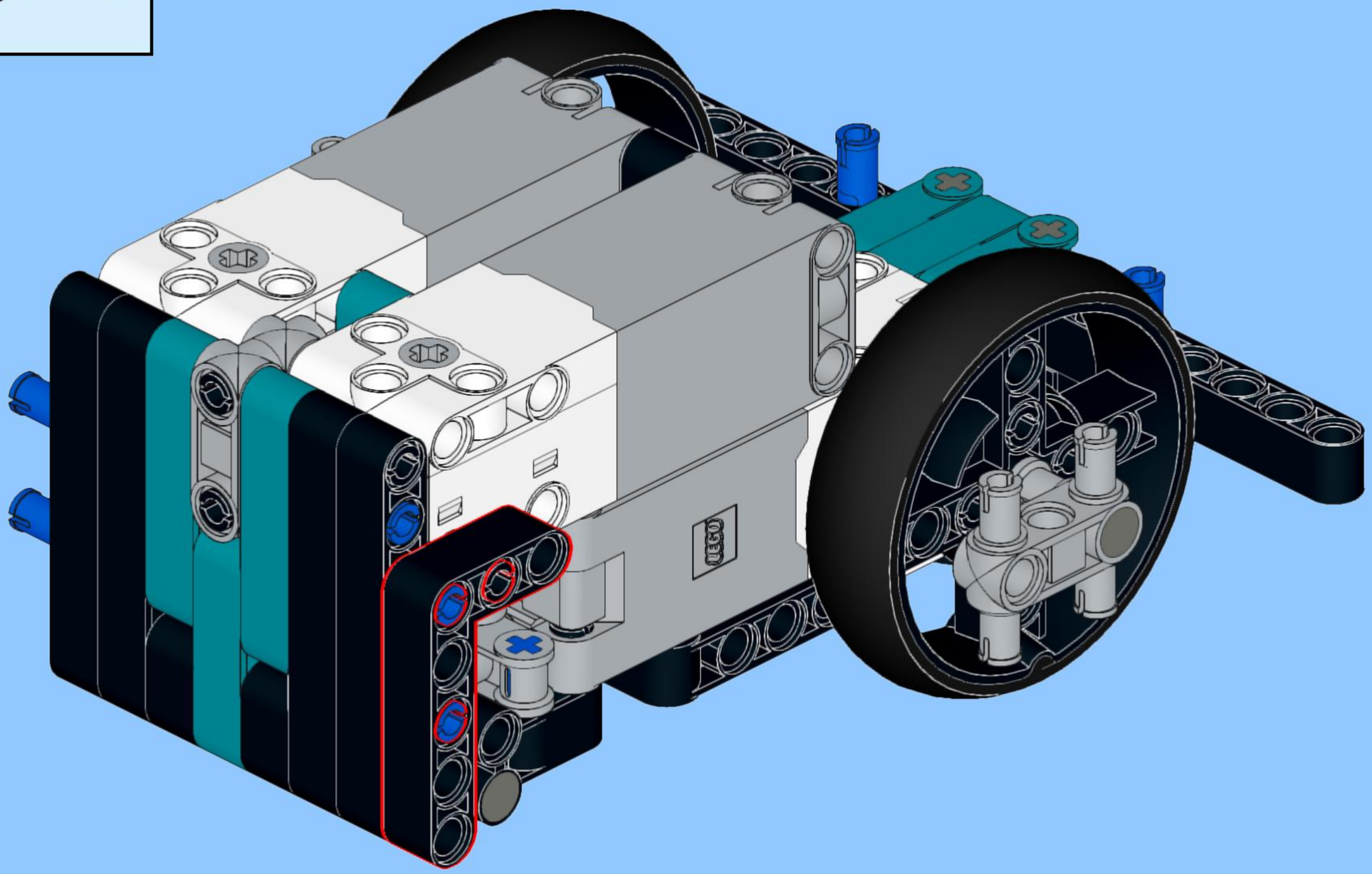

44

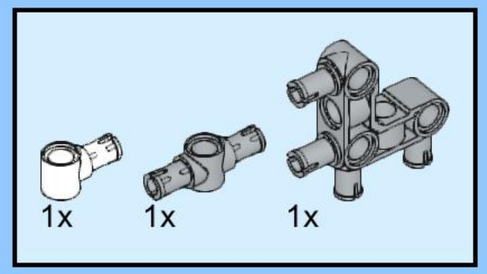

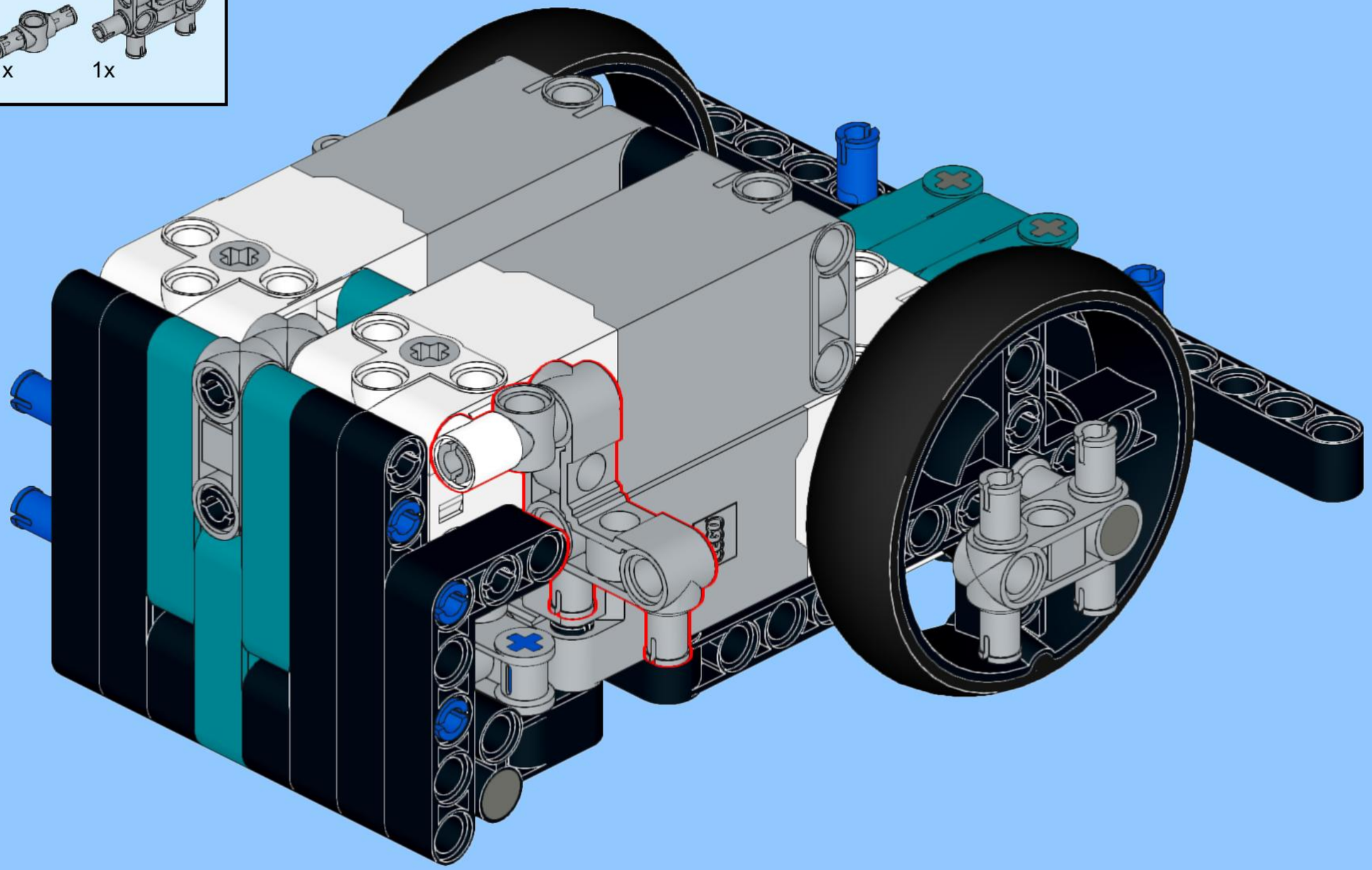

45

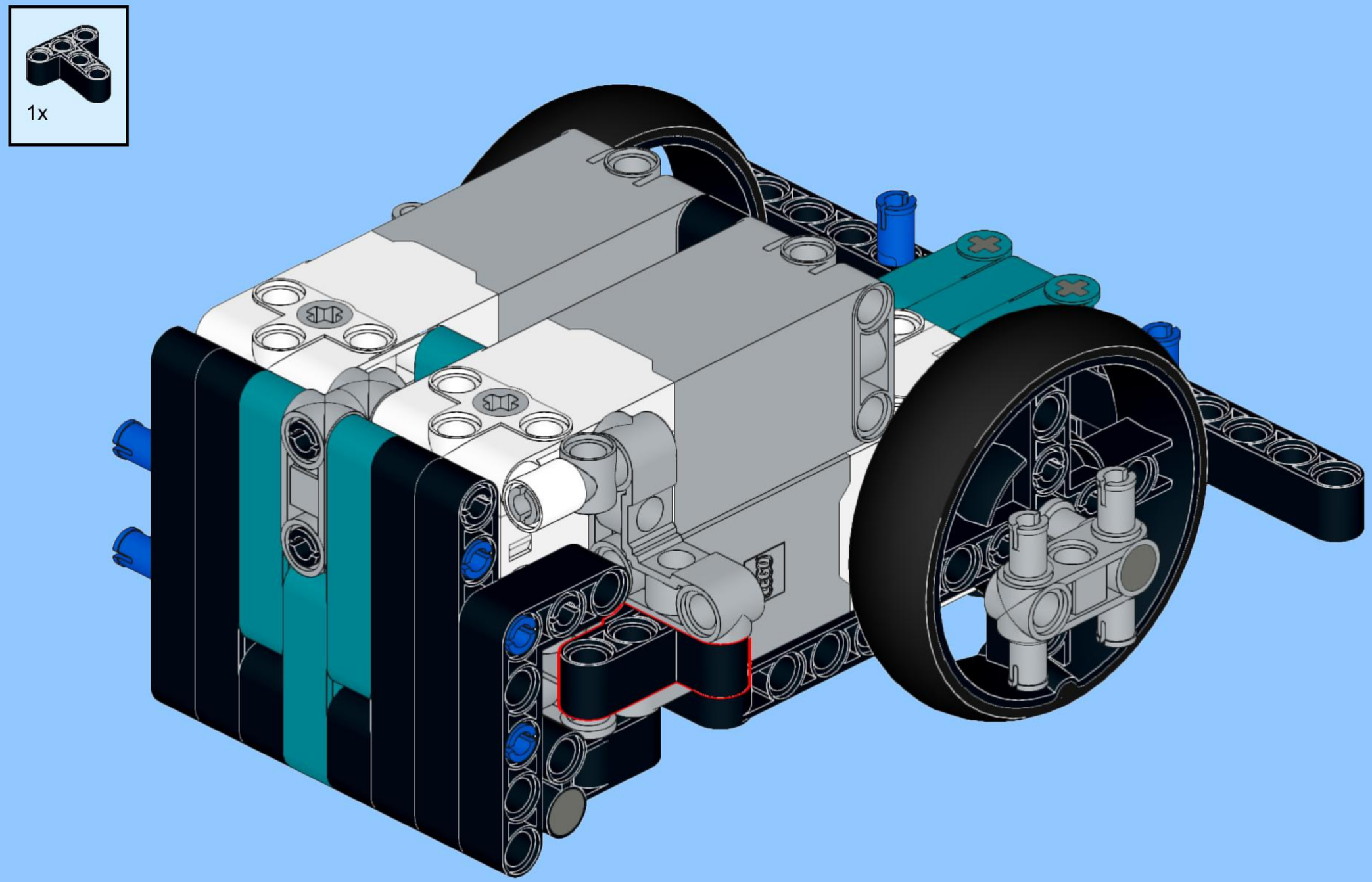

46

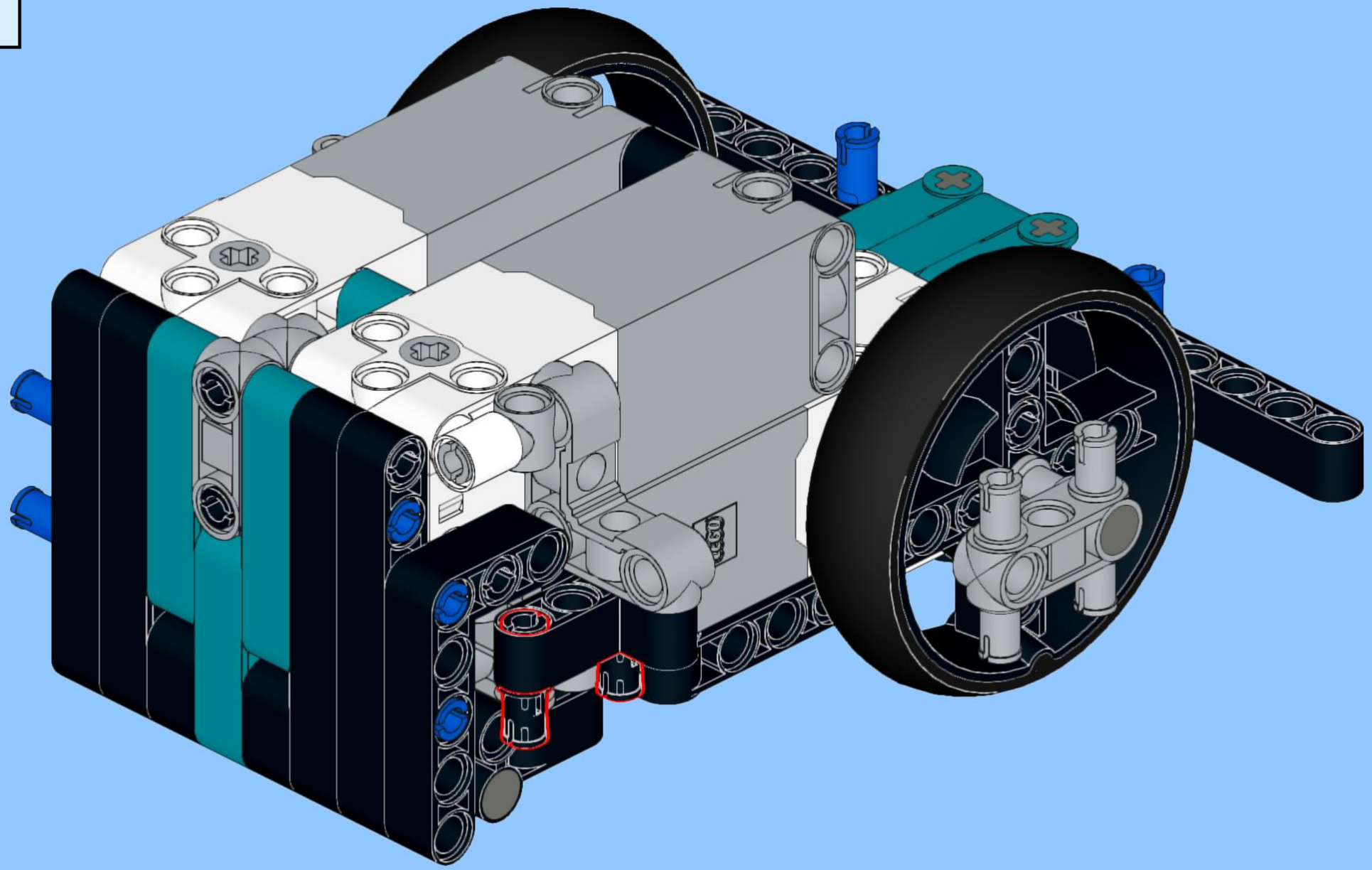

47

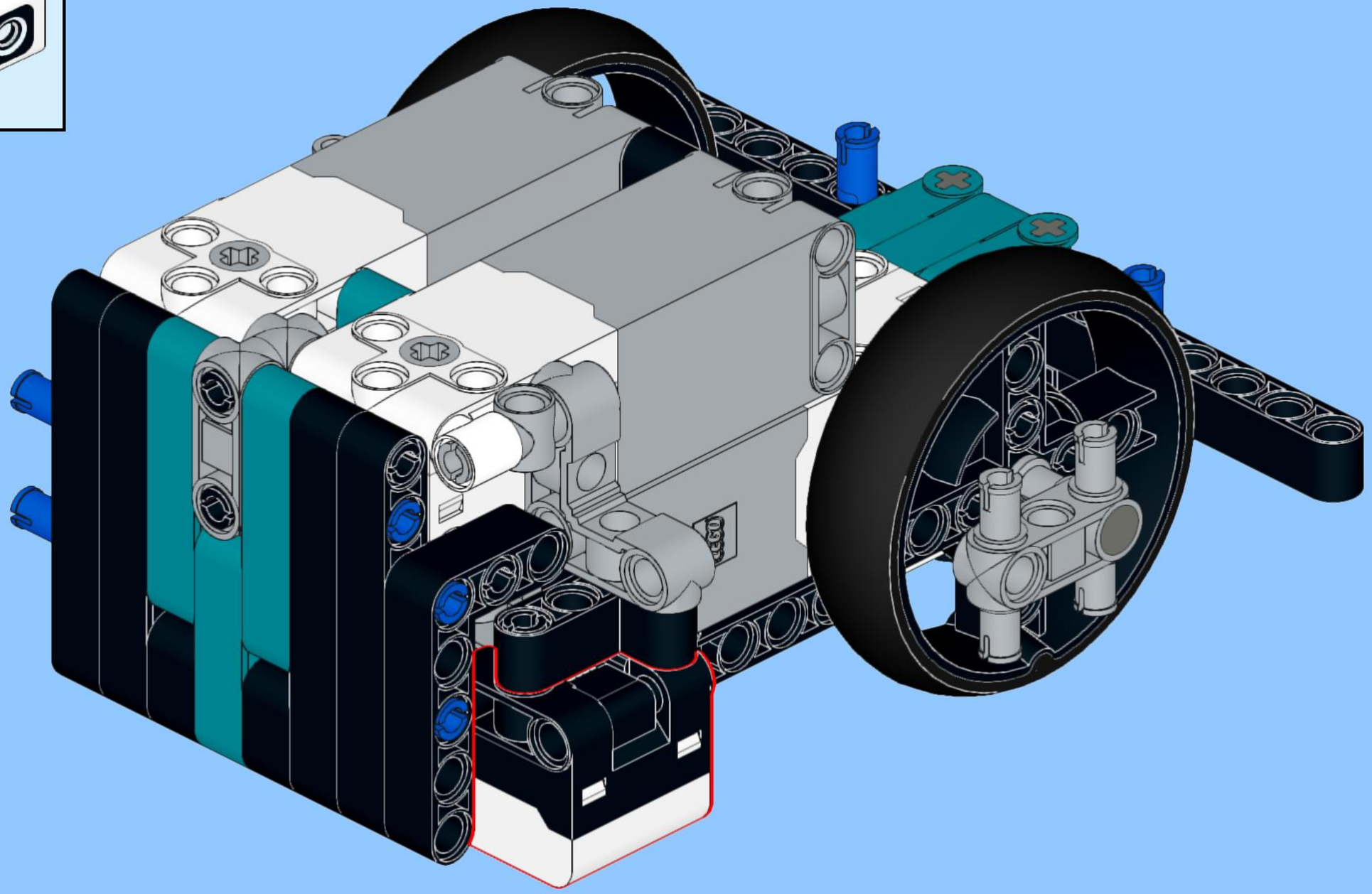

48

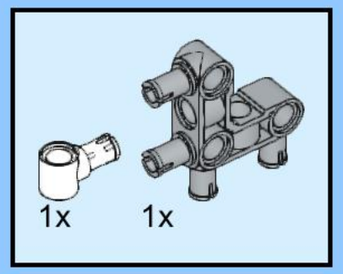

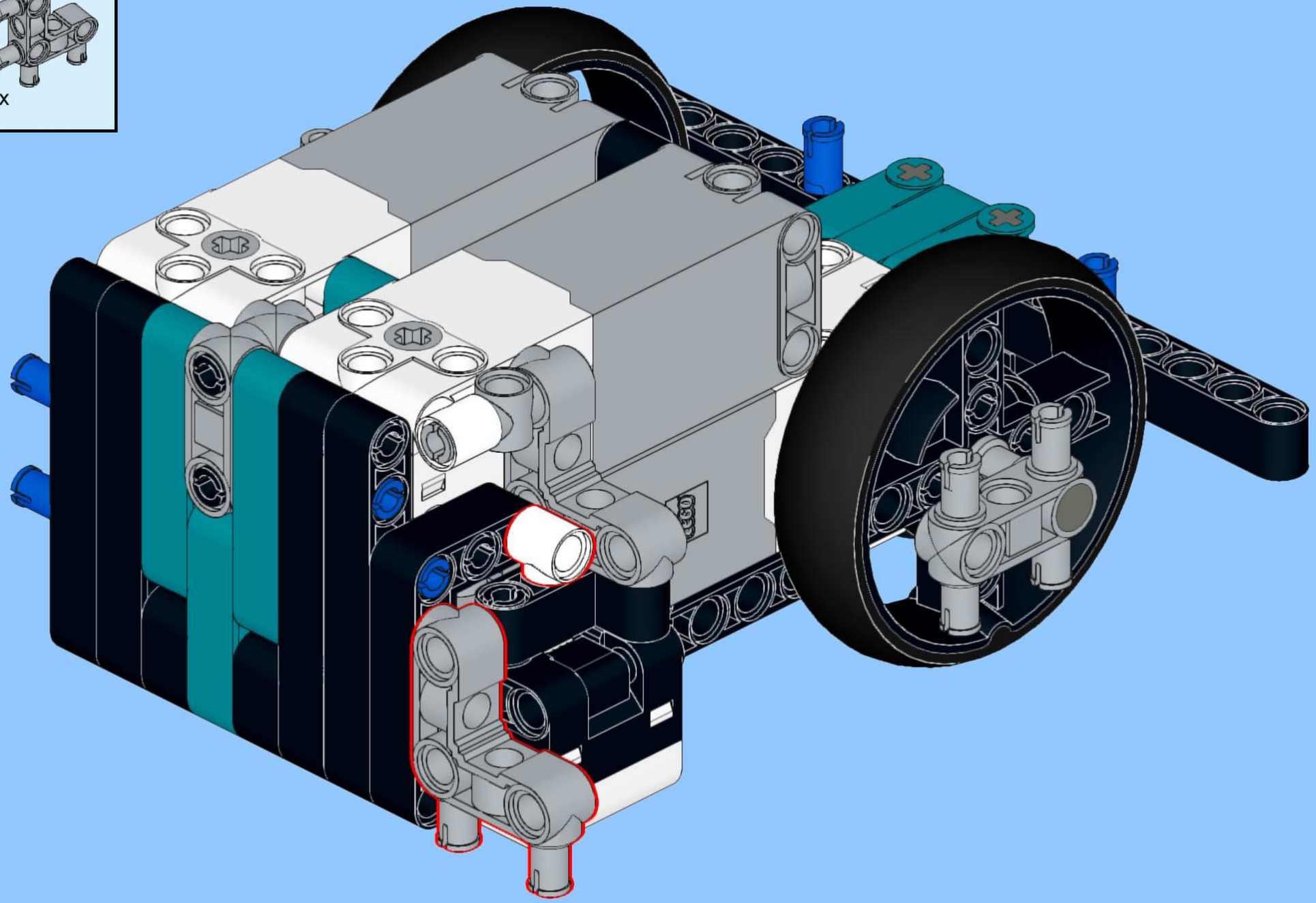

49

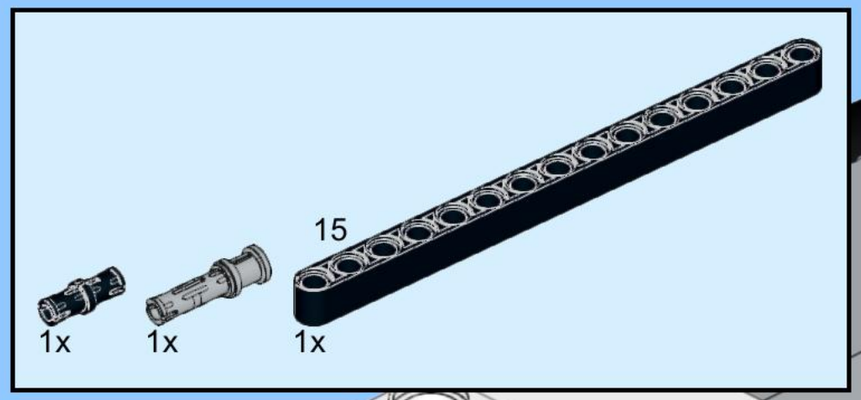

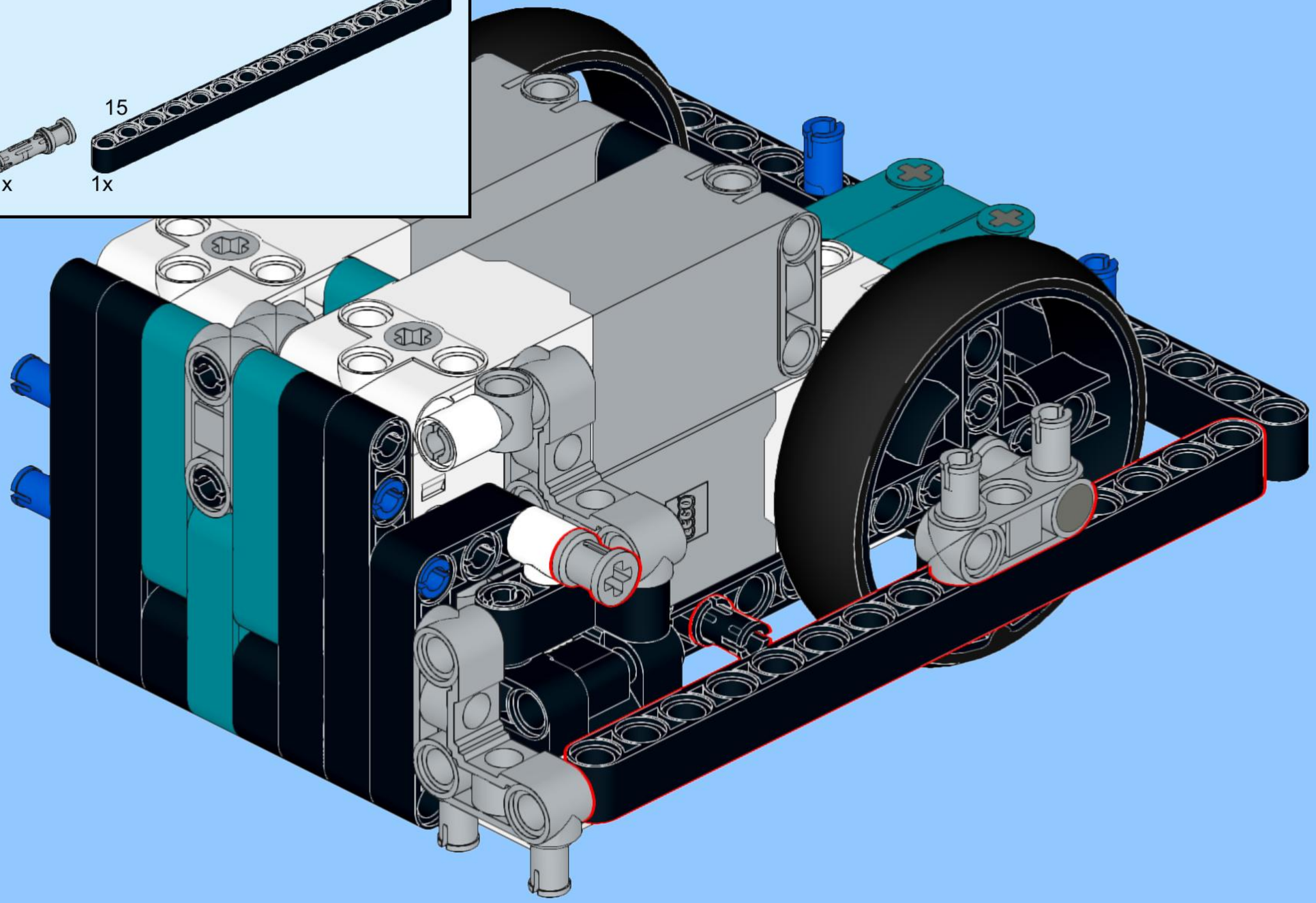

50

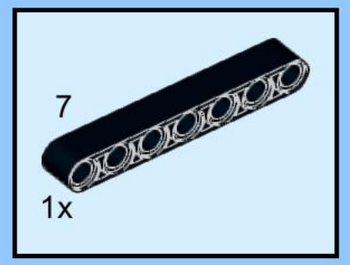

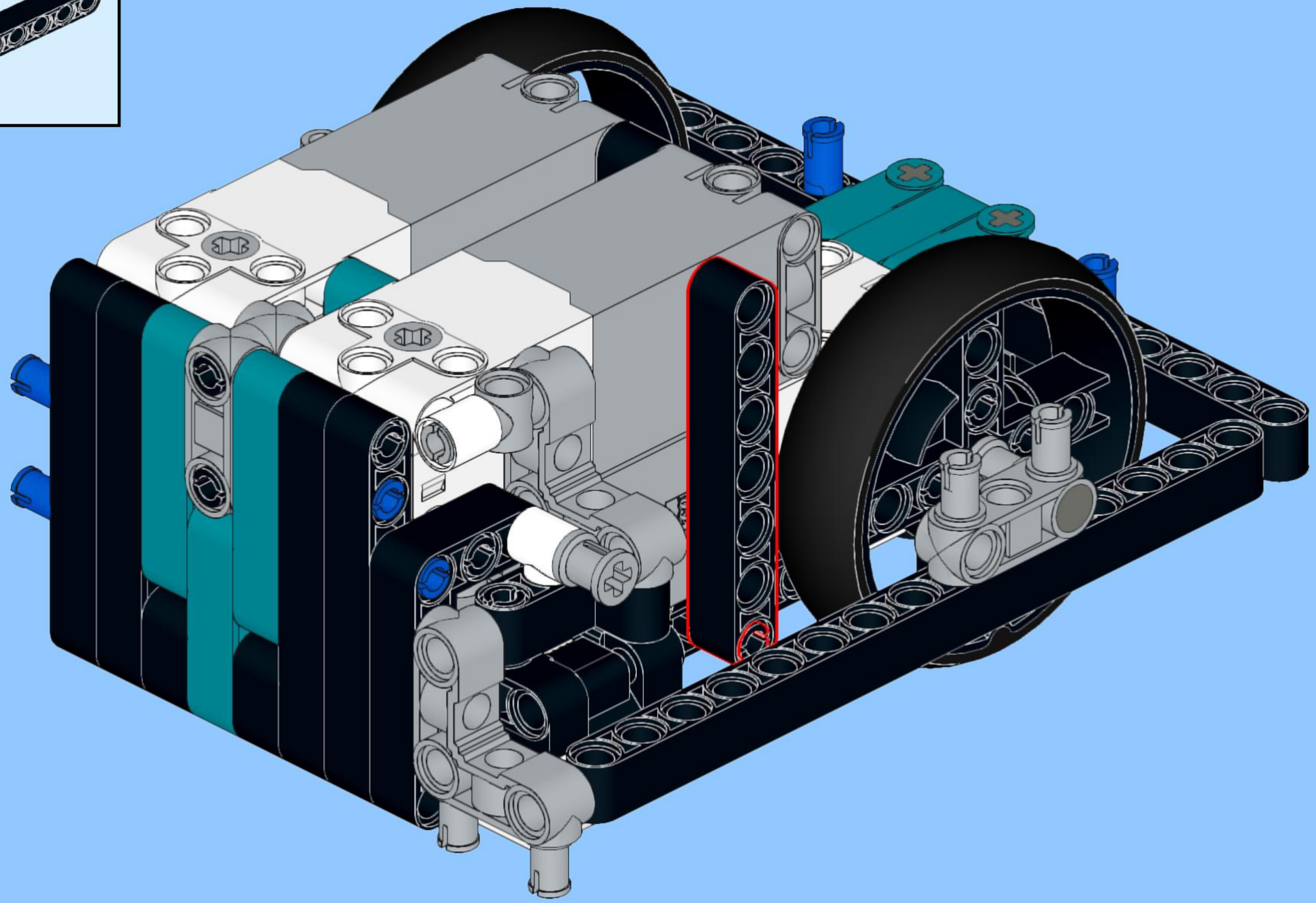

51

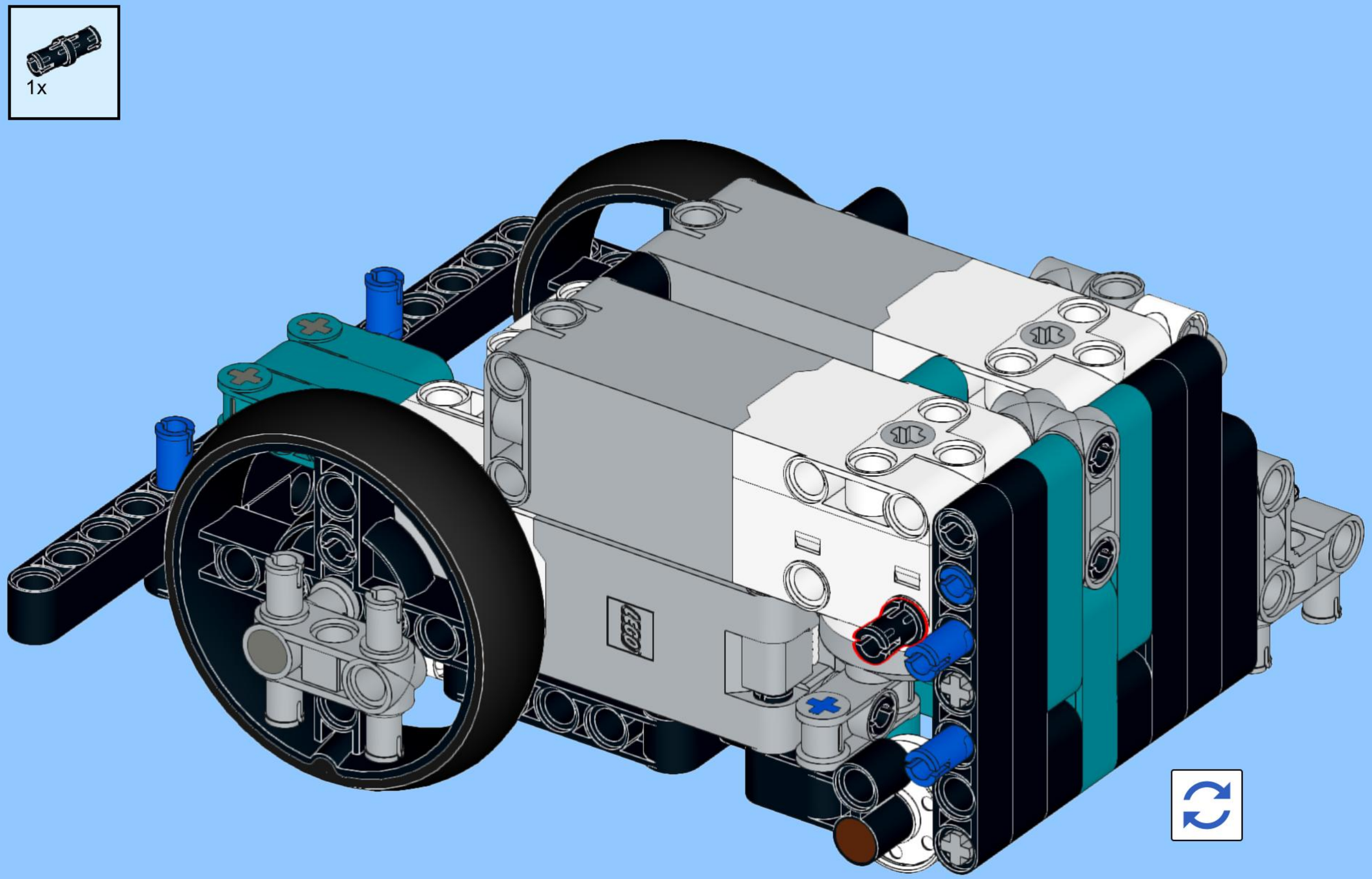

52

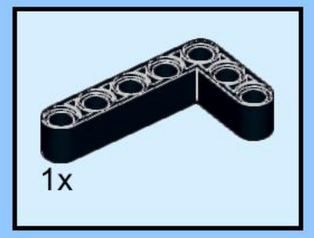

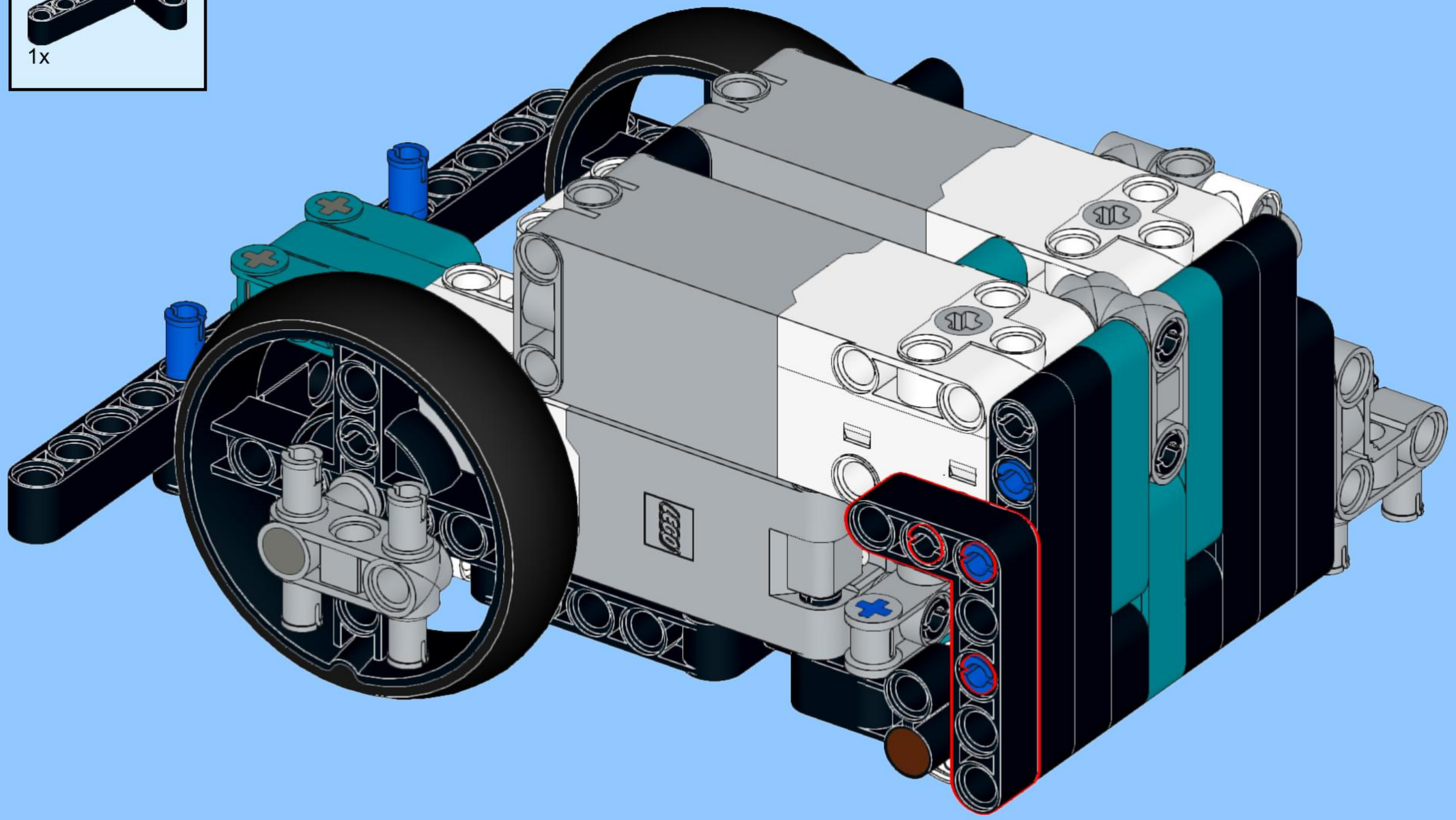

53

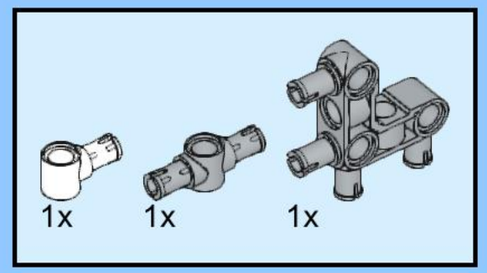

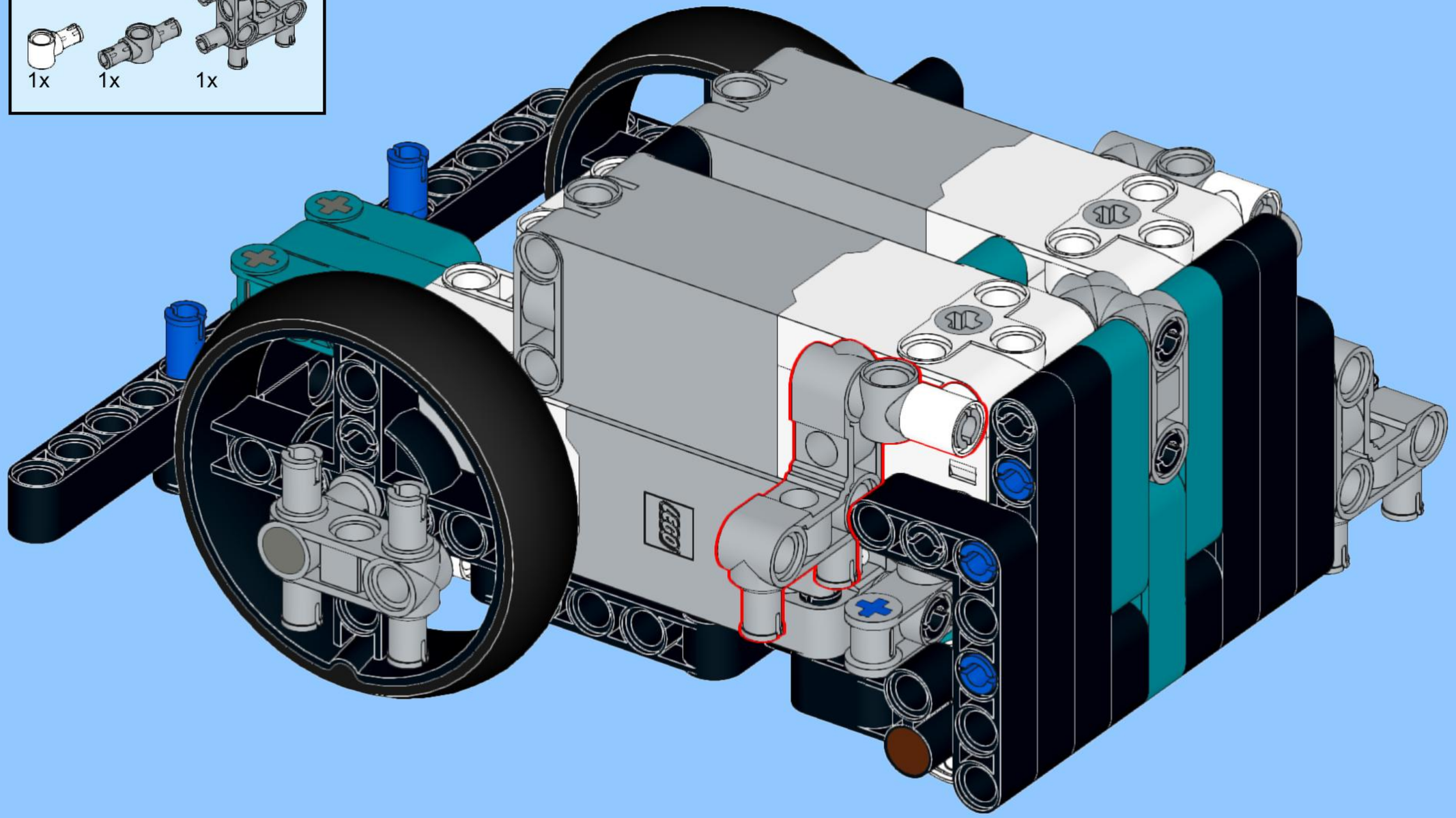

54

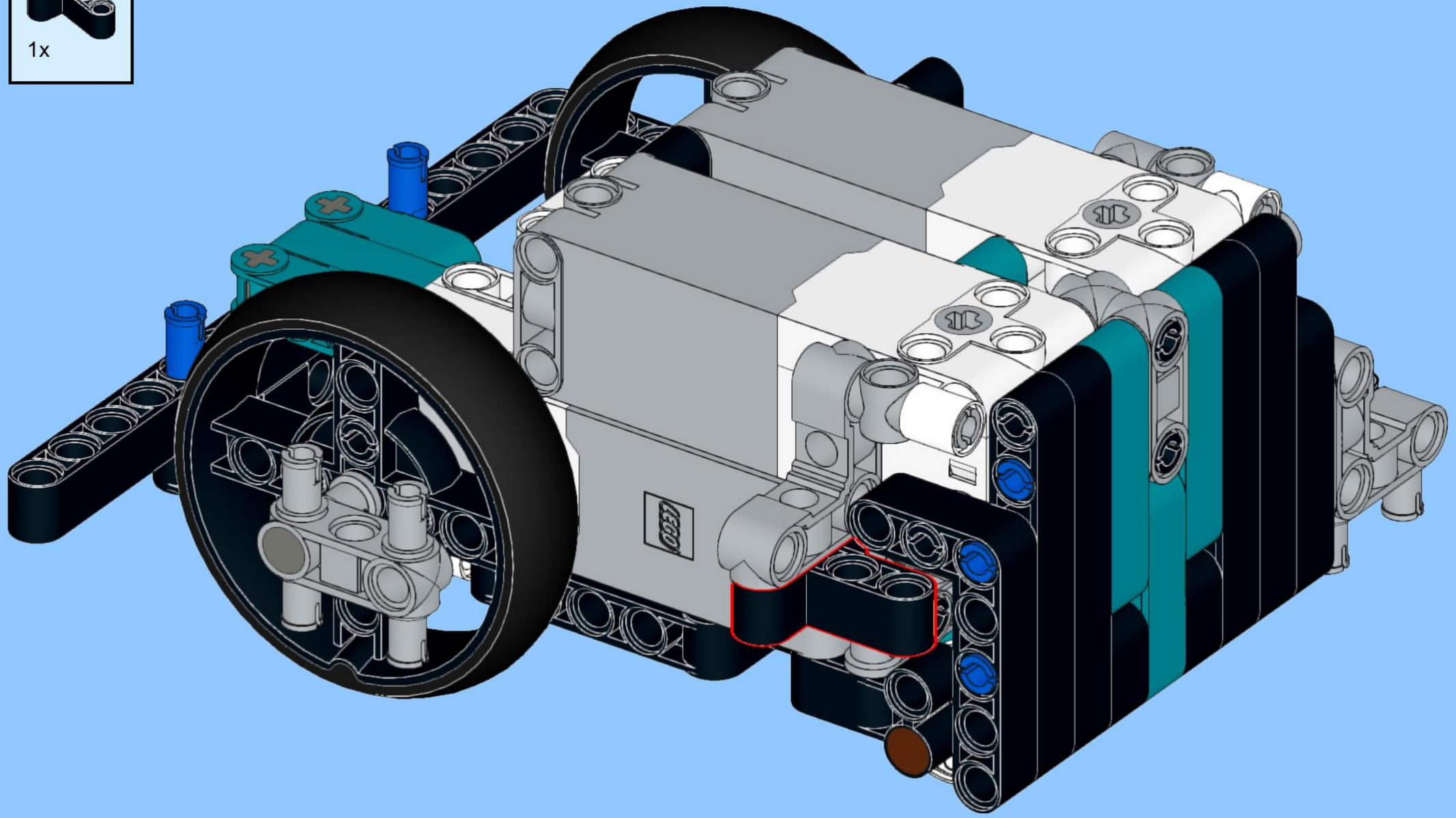

55

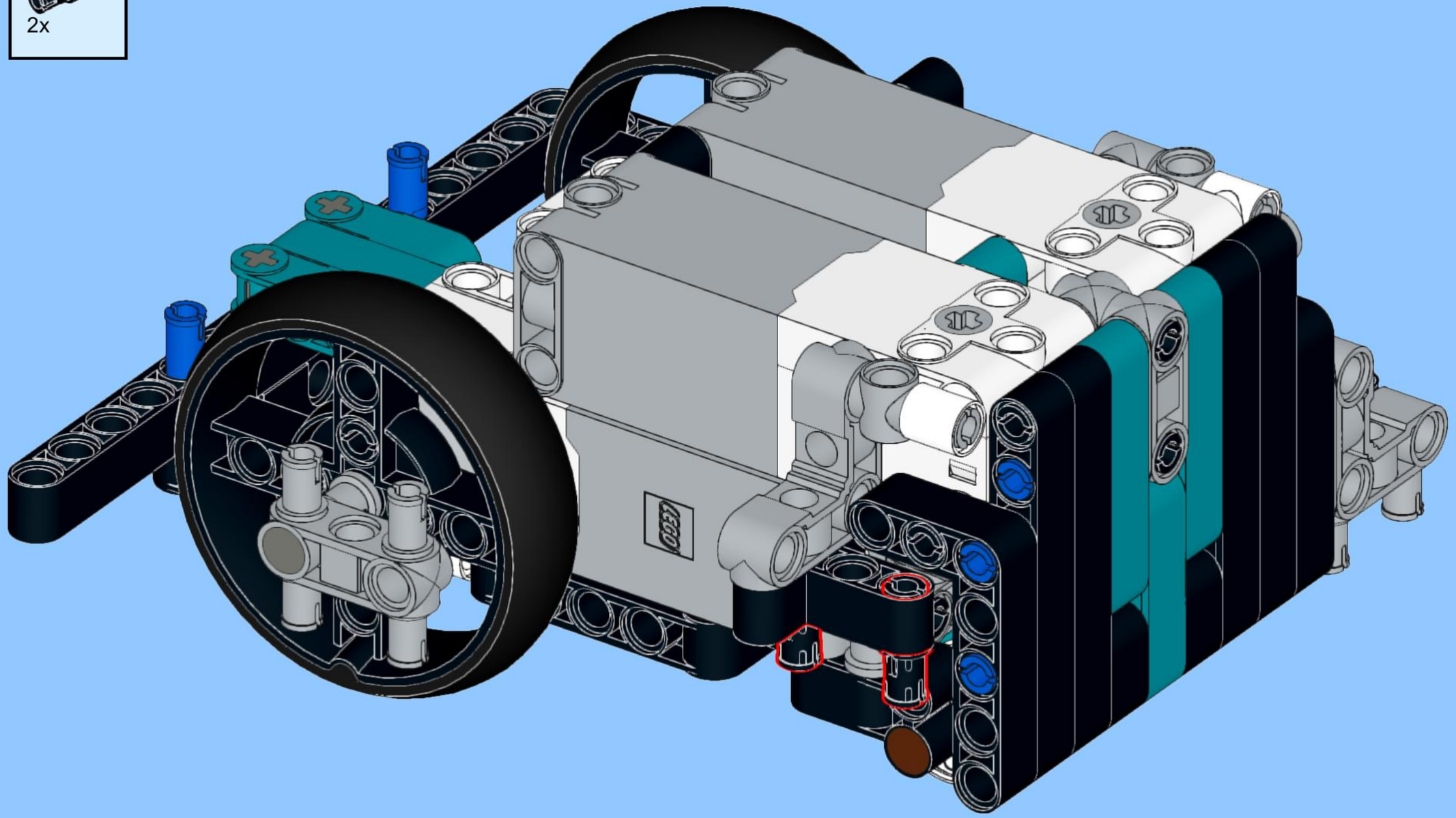

56

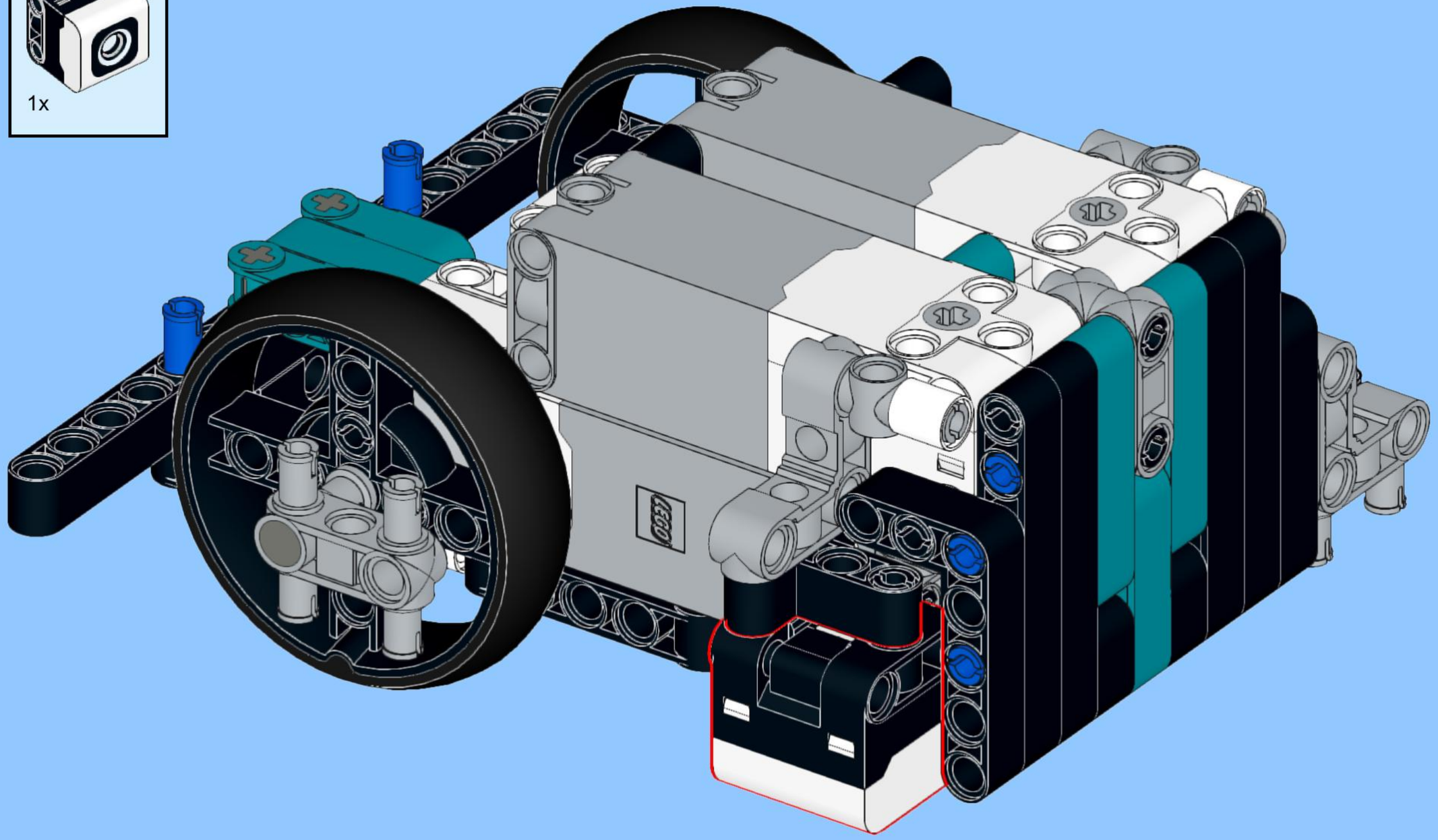

57

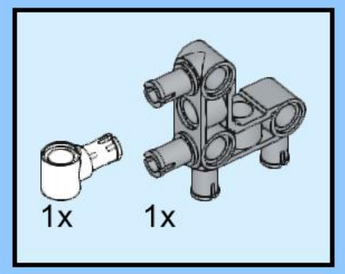

58

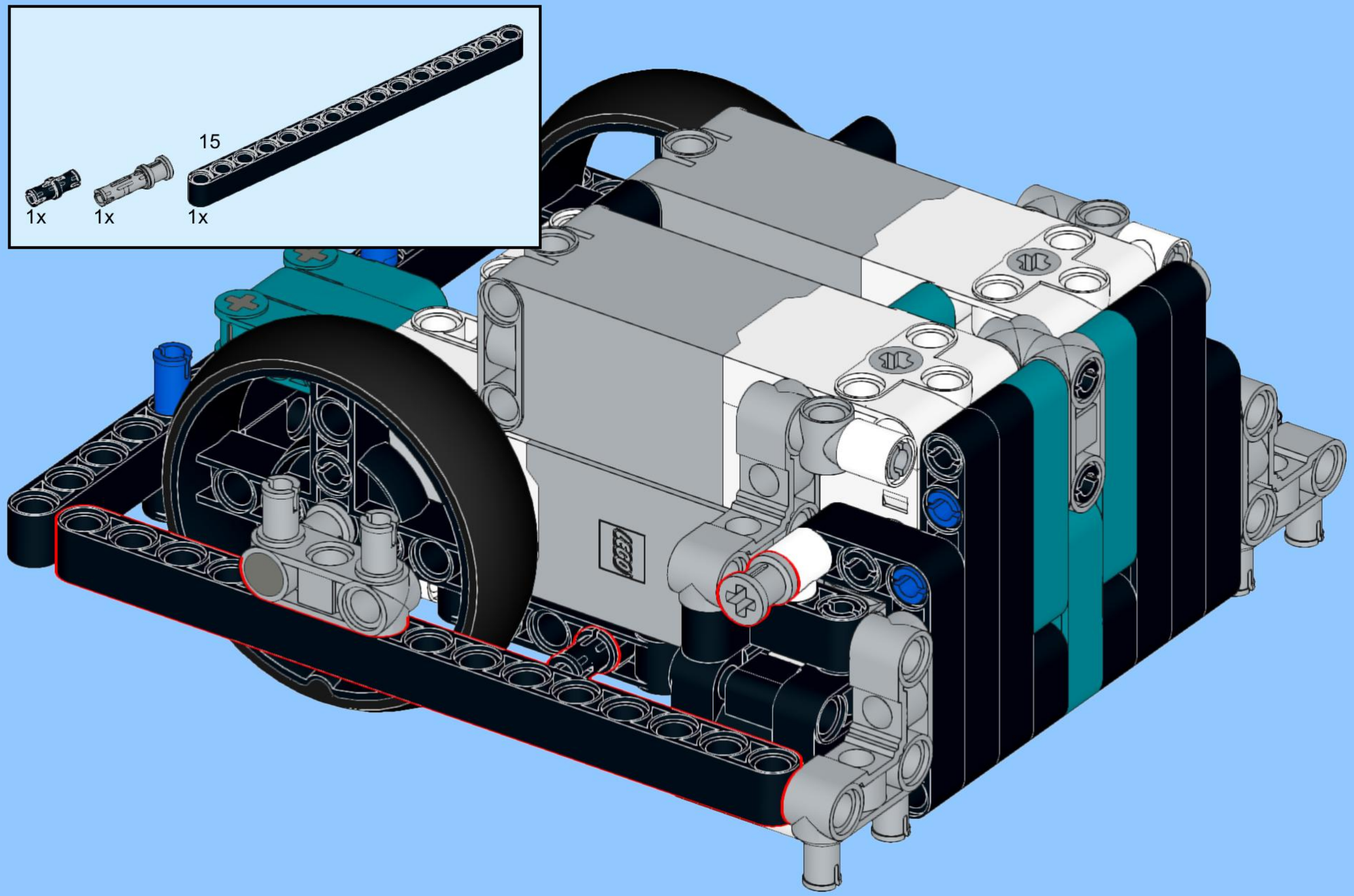

59

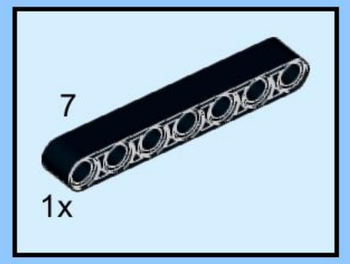

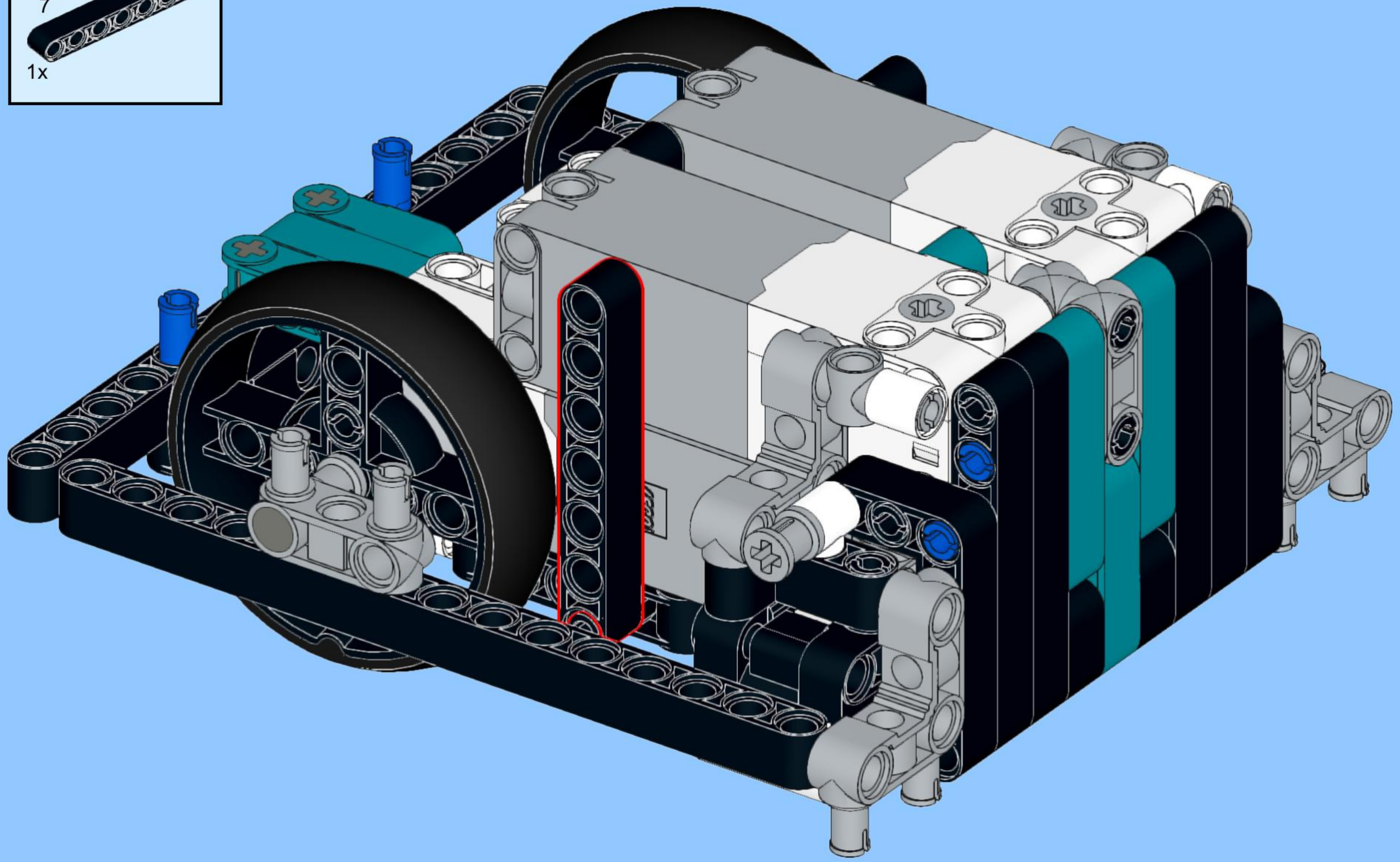

60

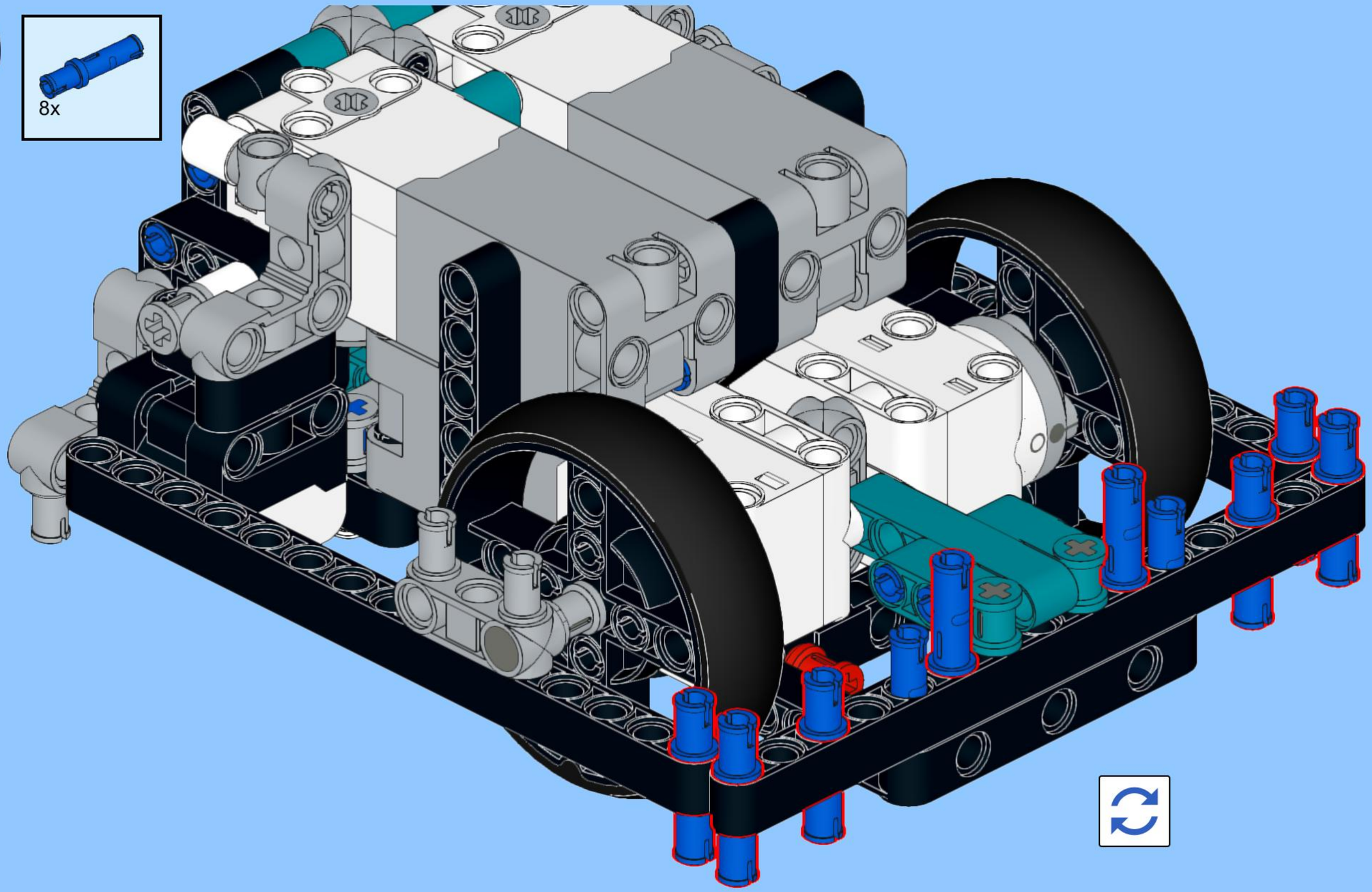

61

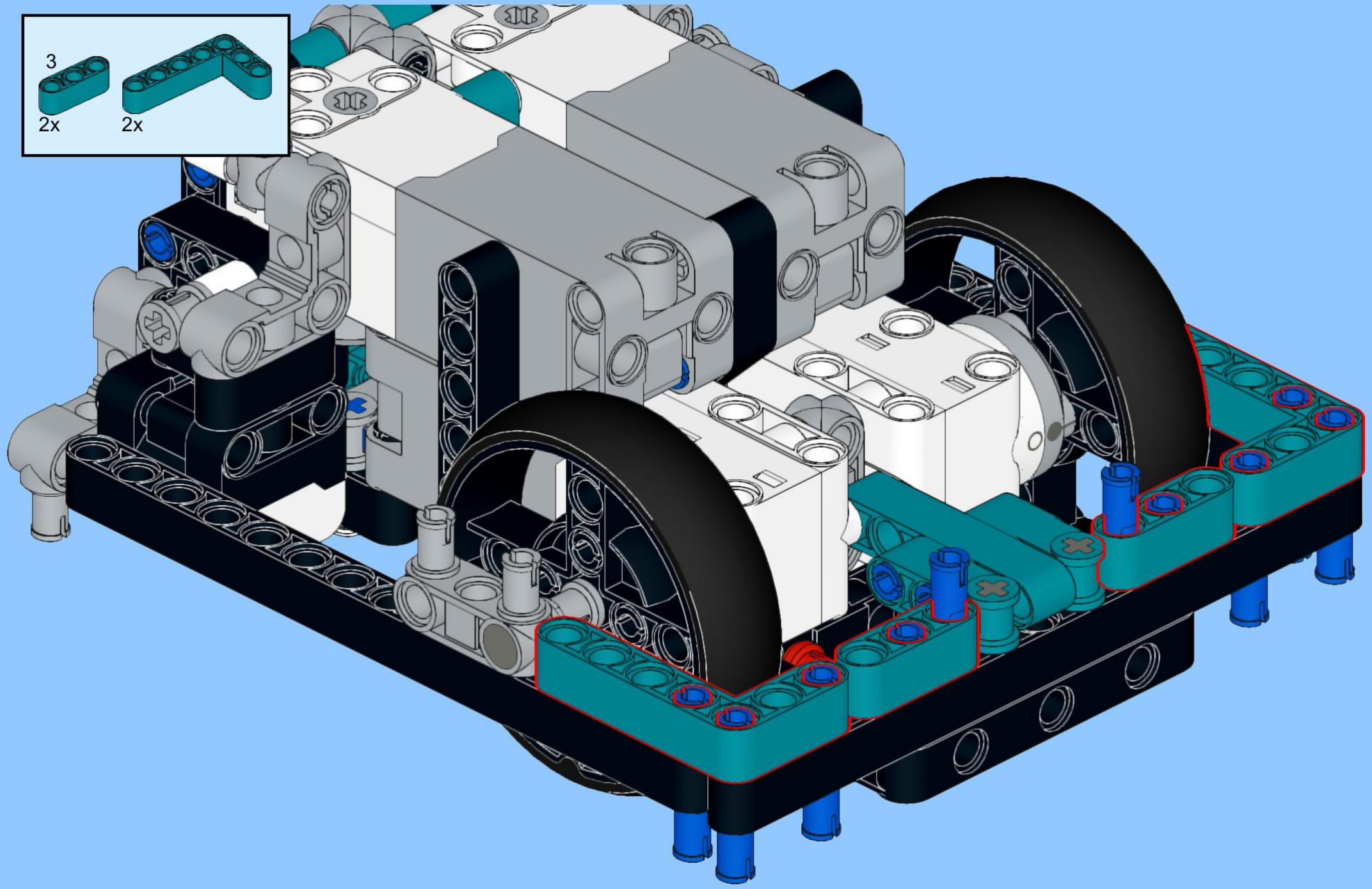

62

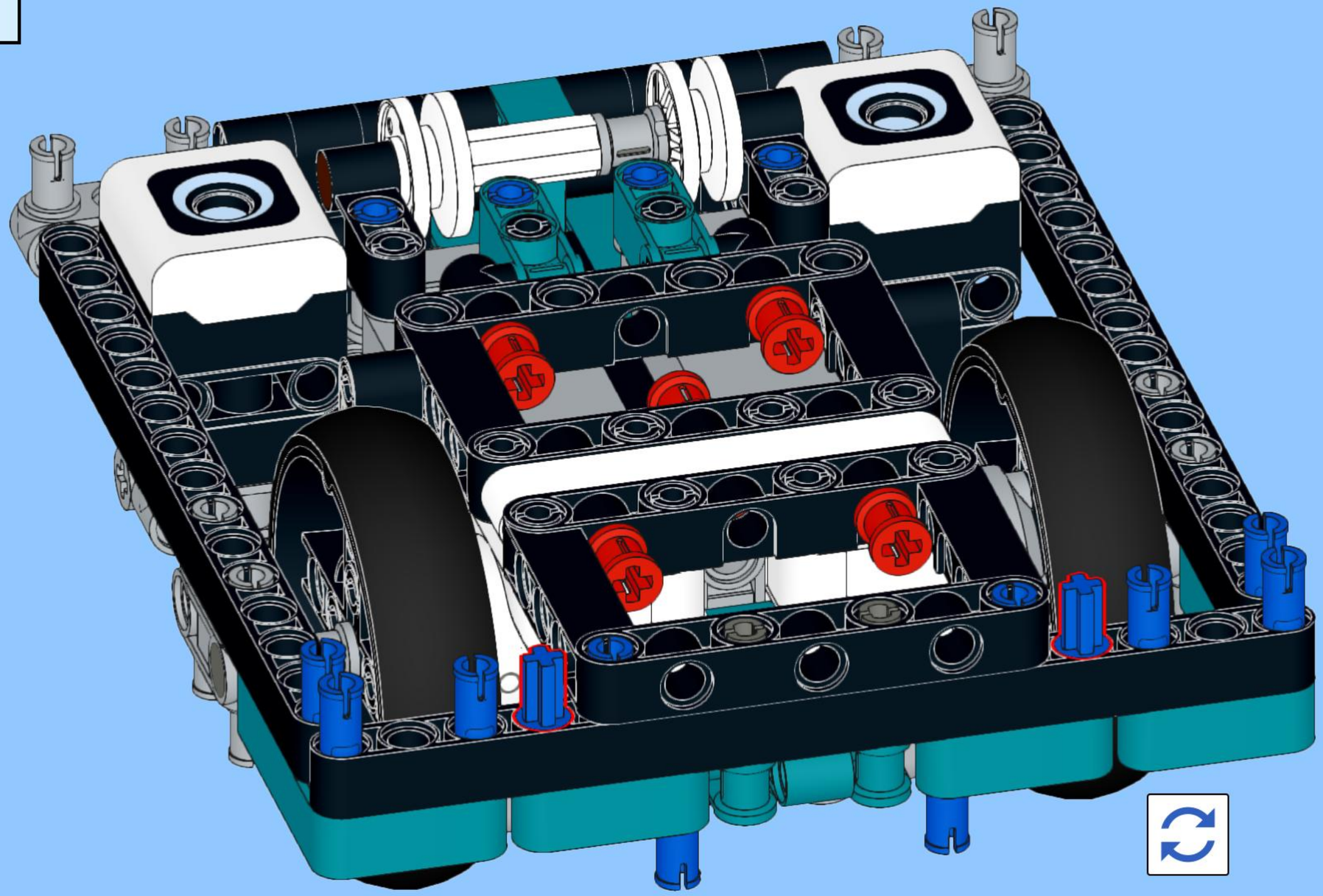

63

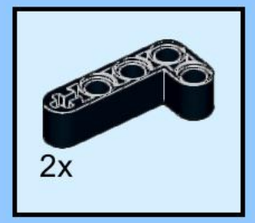

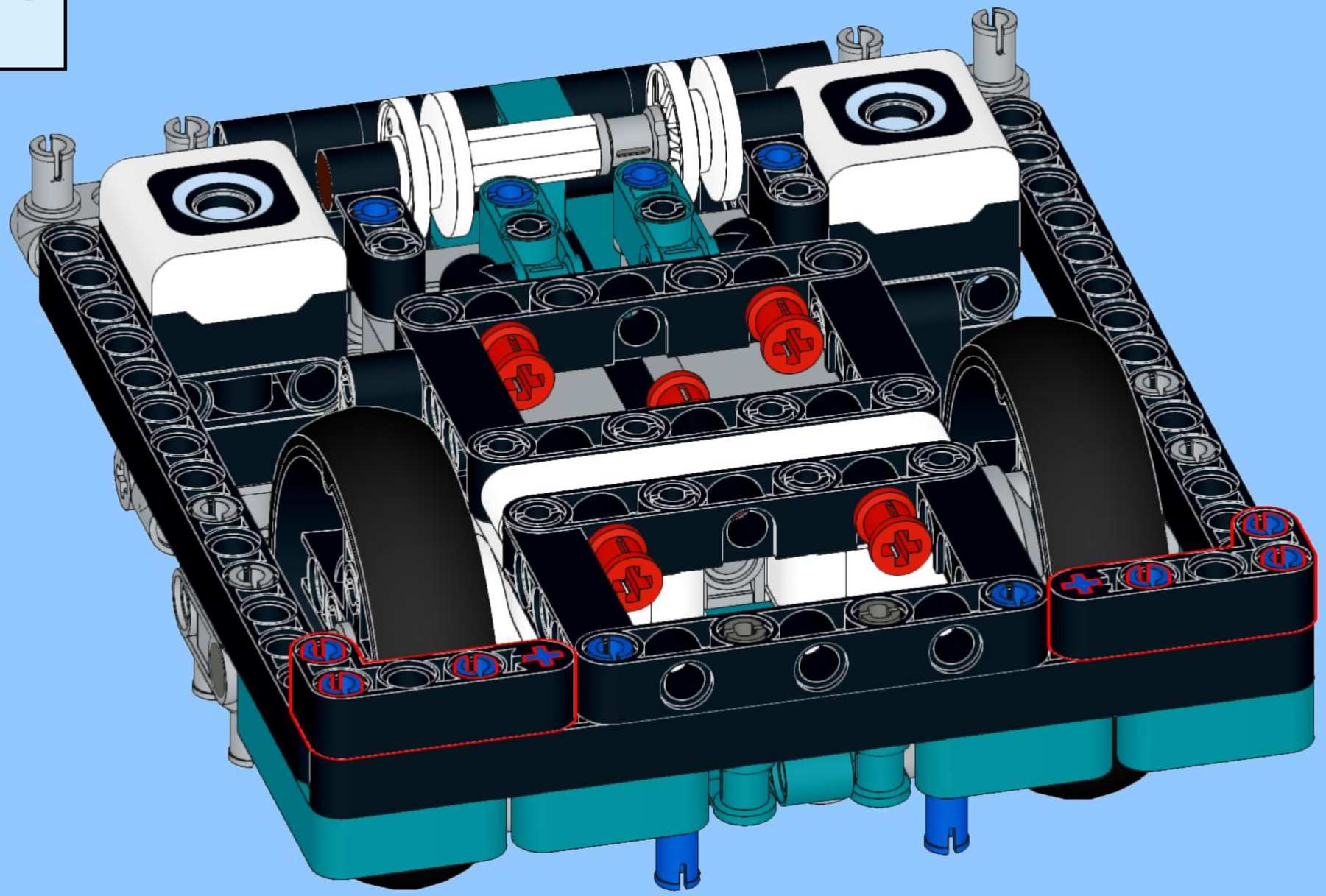

64

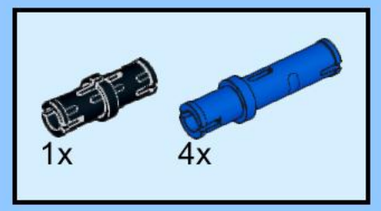

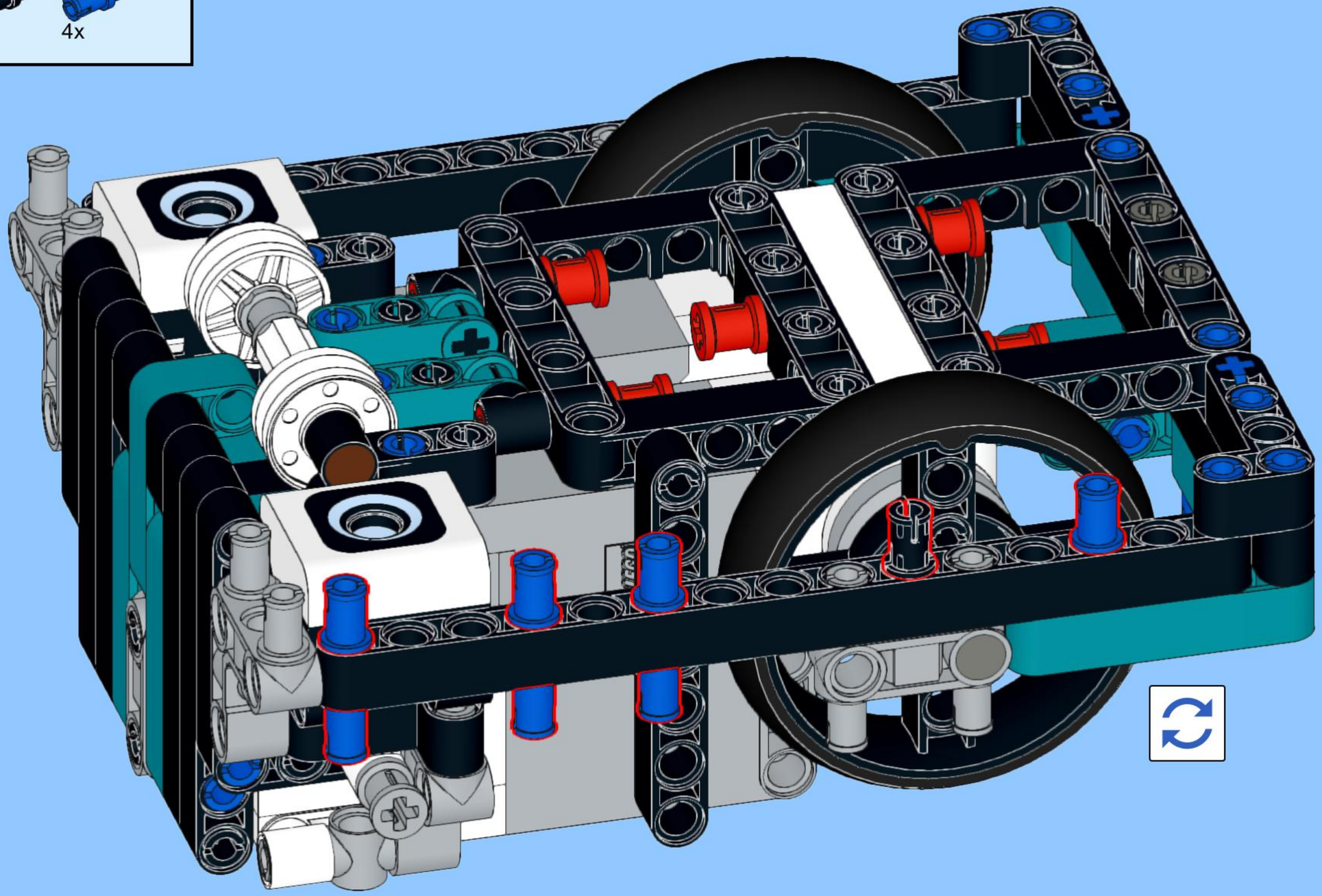

65

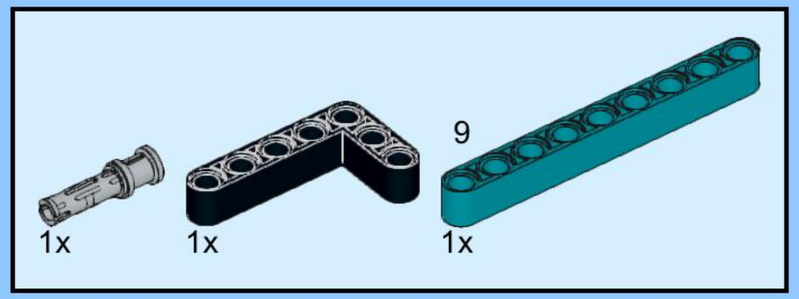

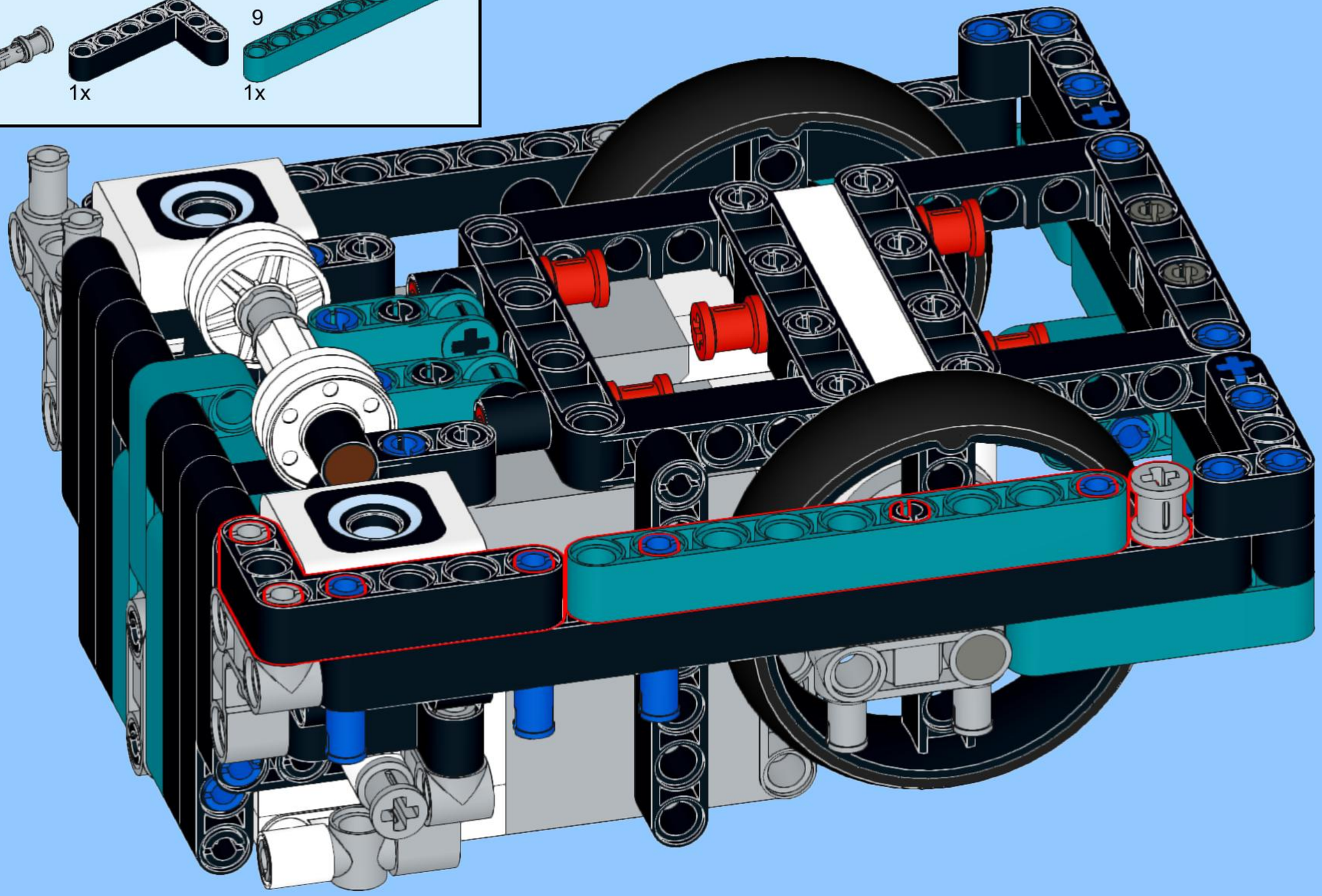

66

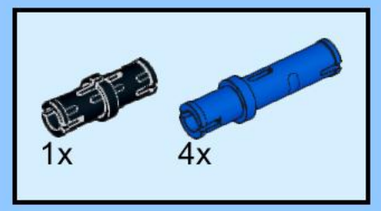

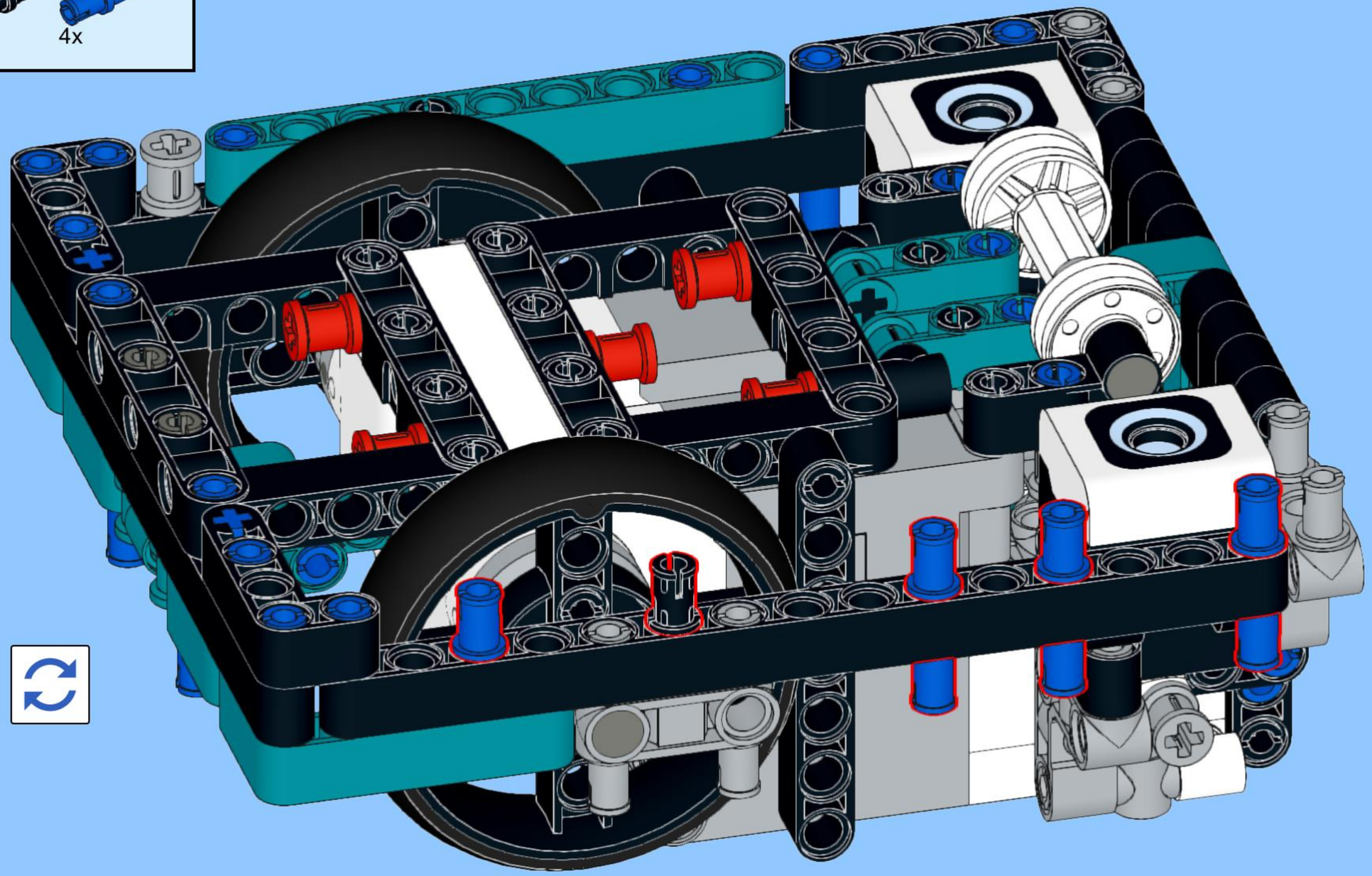

67

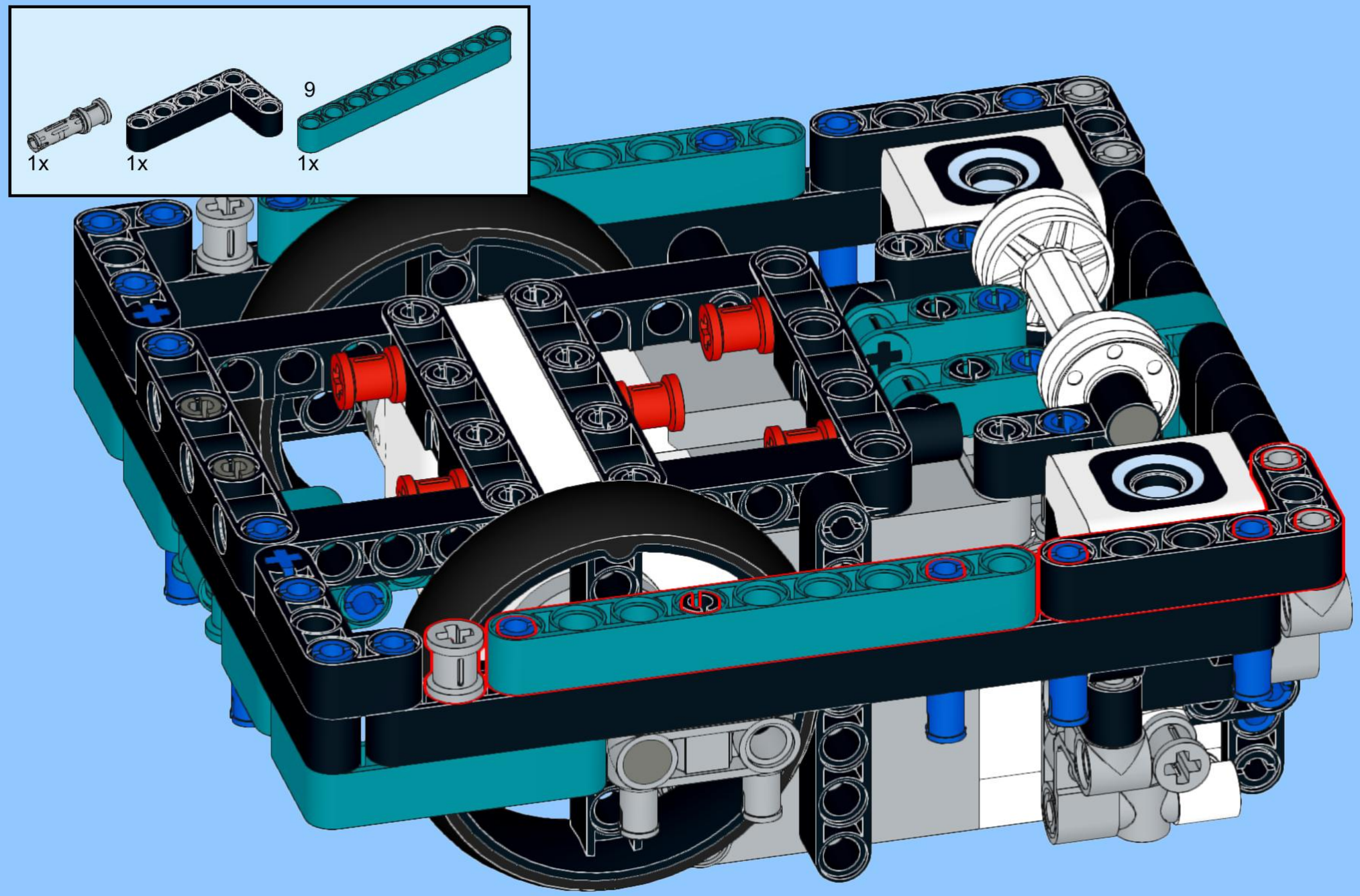

68

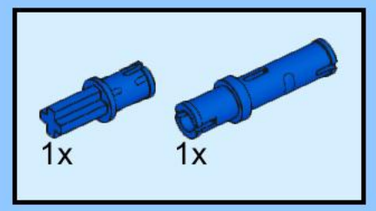

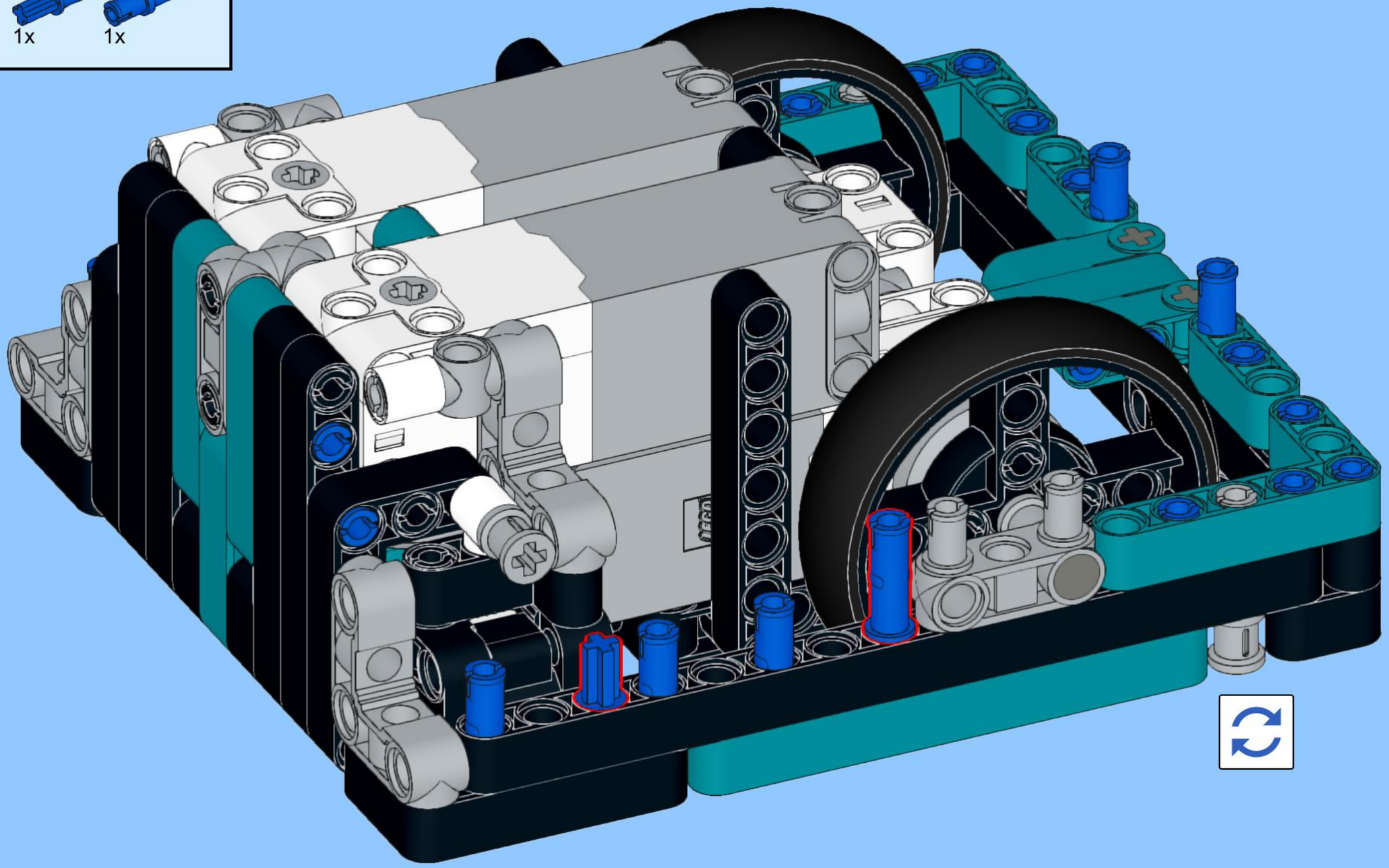

69

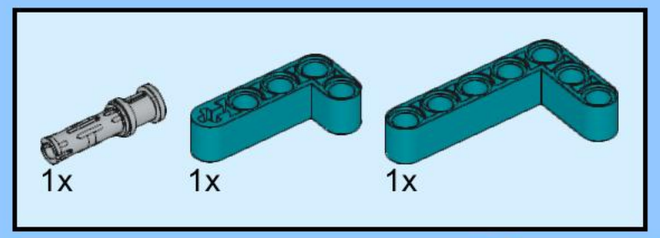

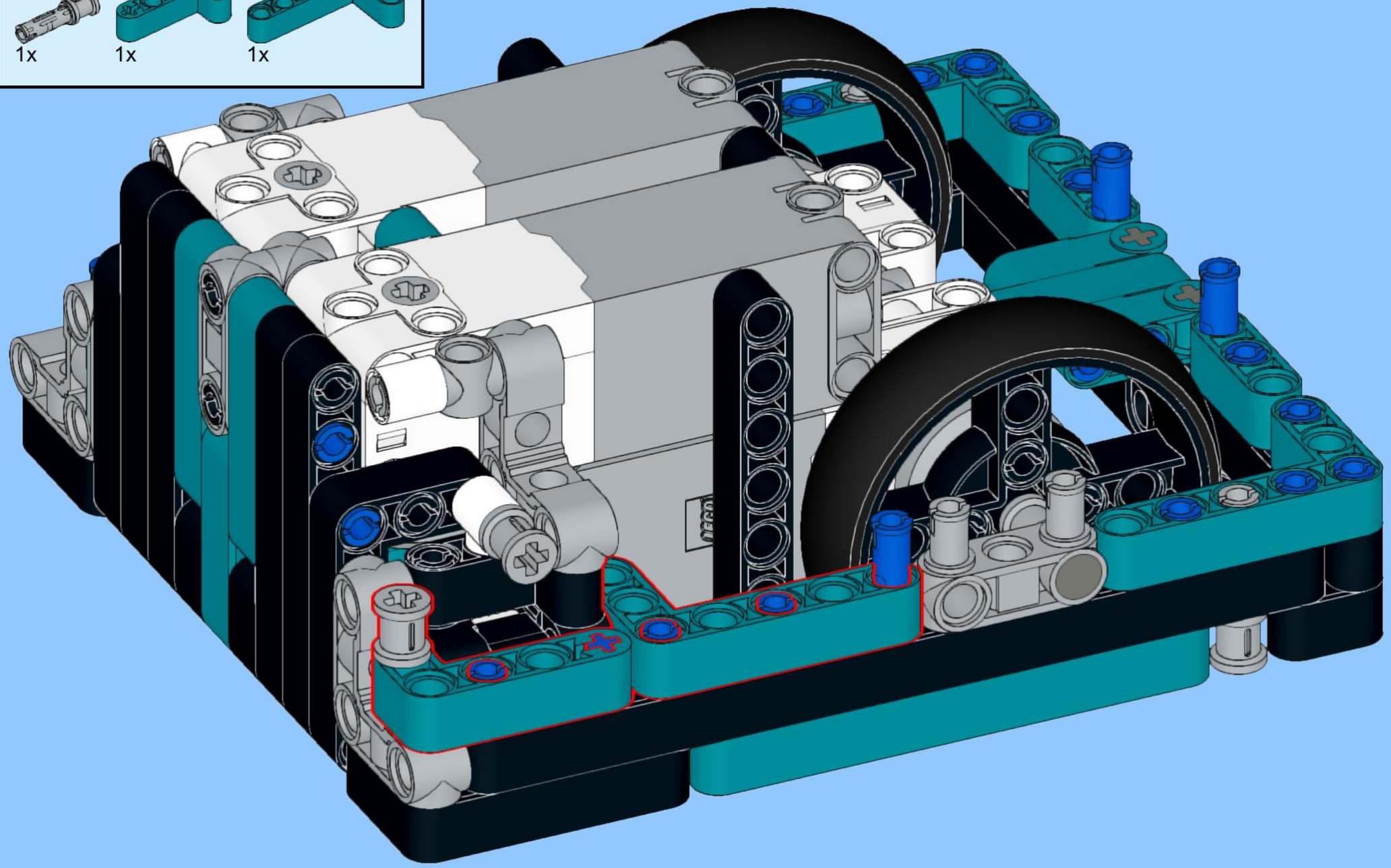

70

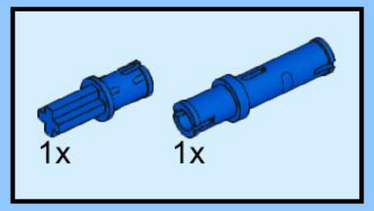

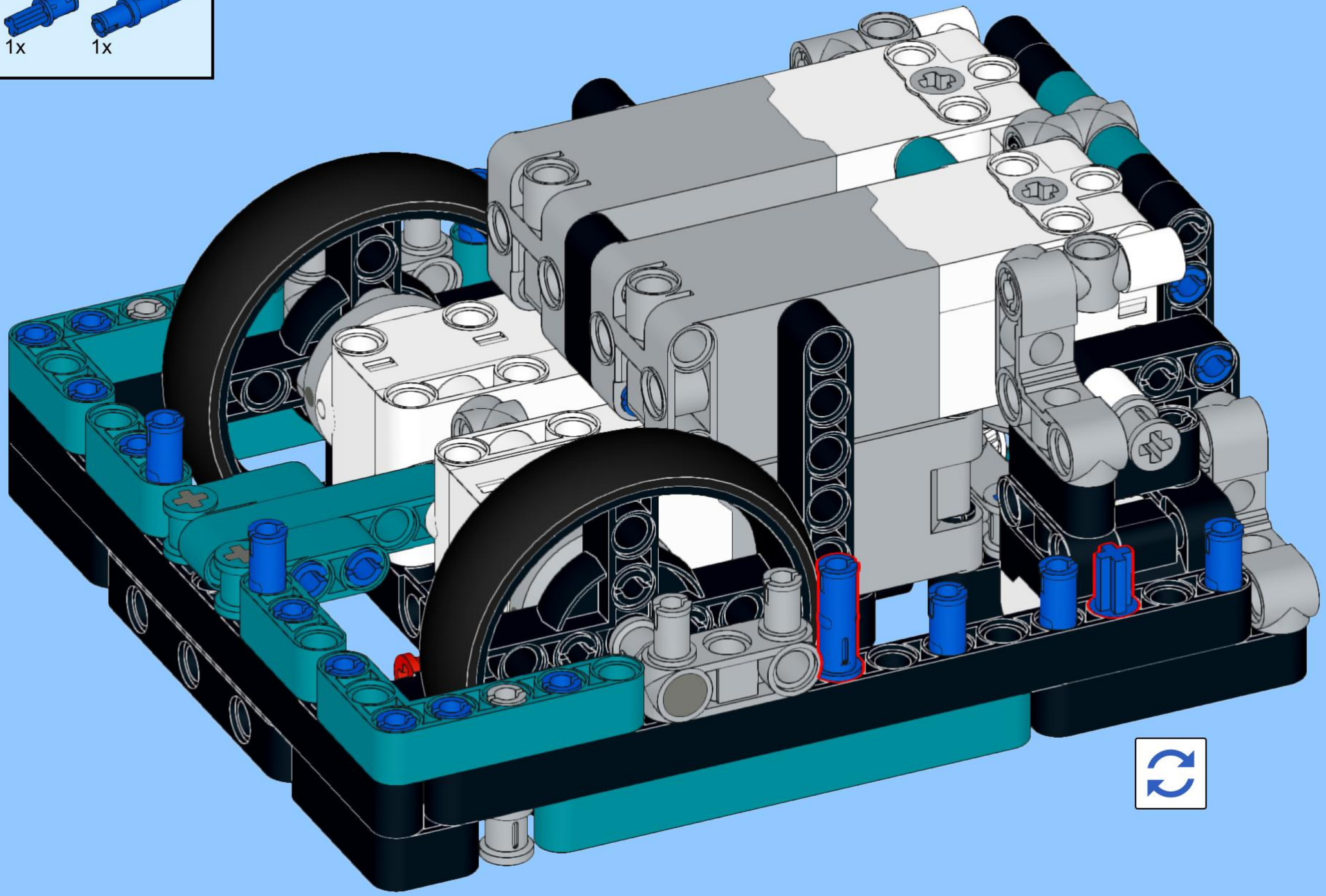

71

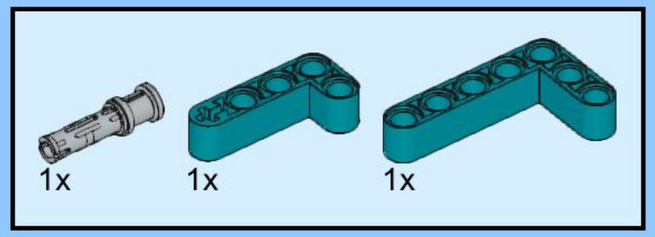

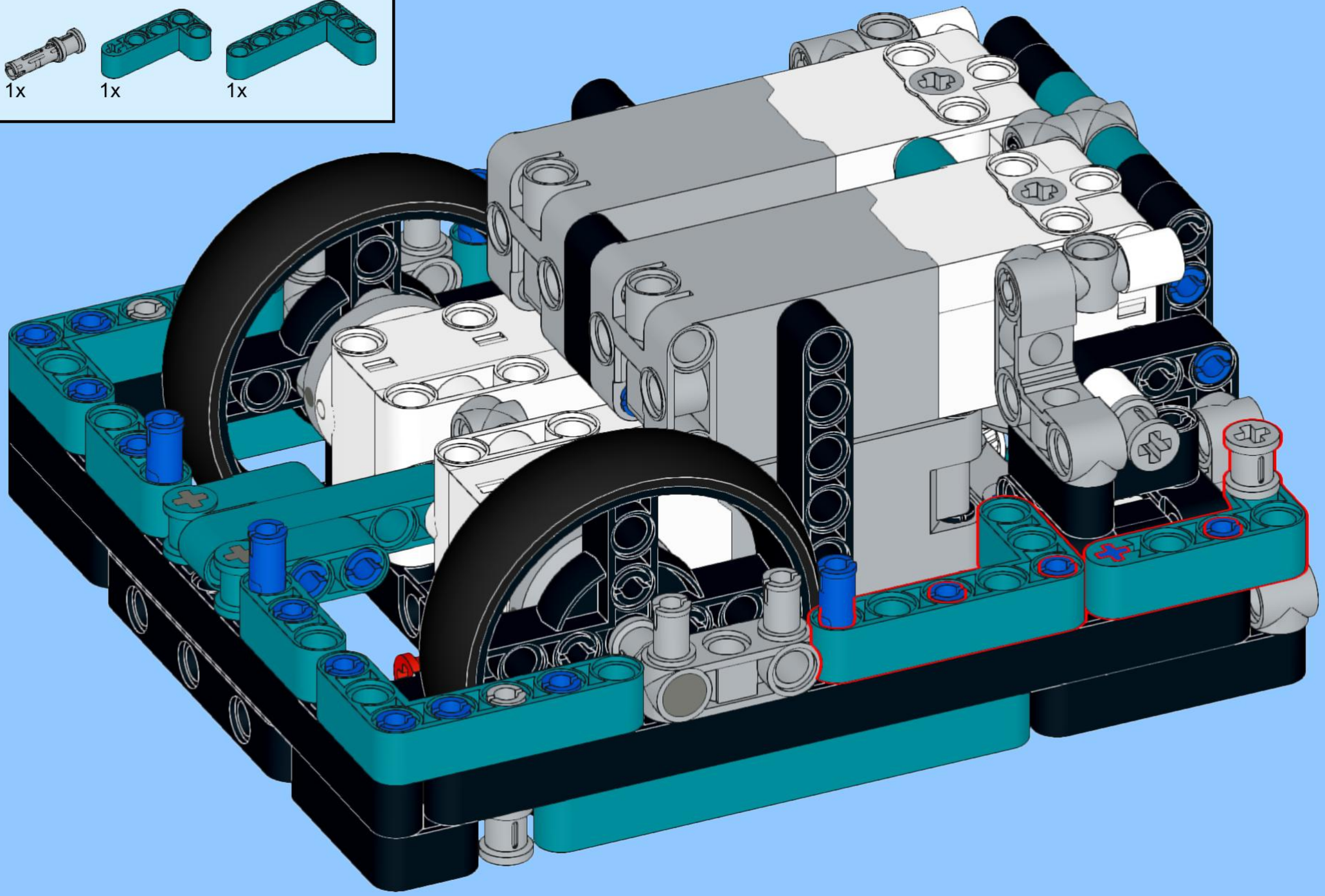

72

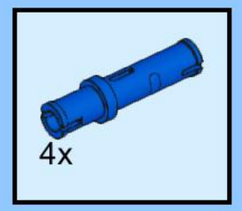

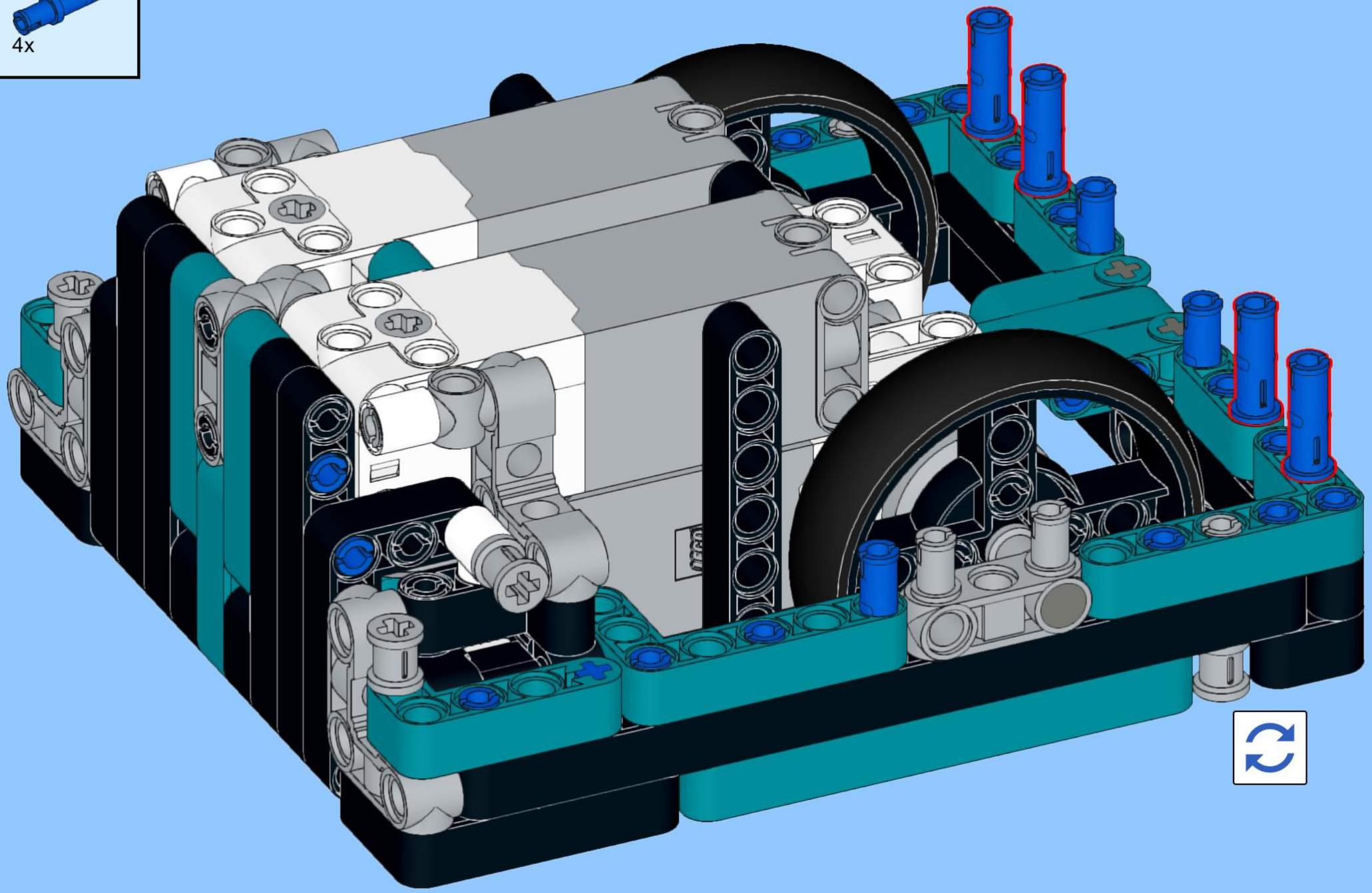

73

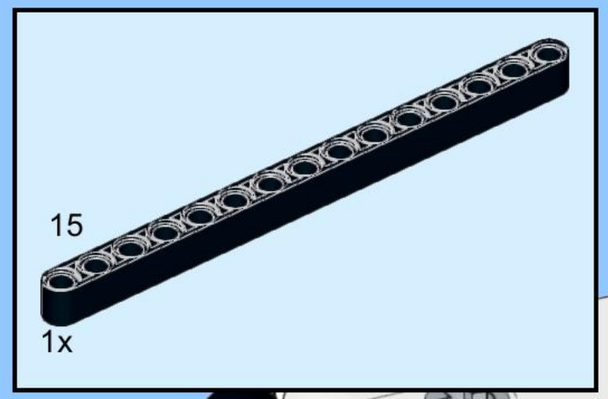

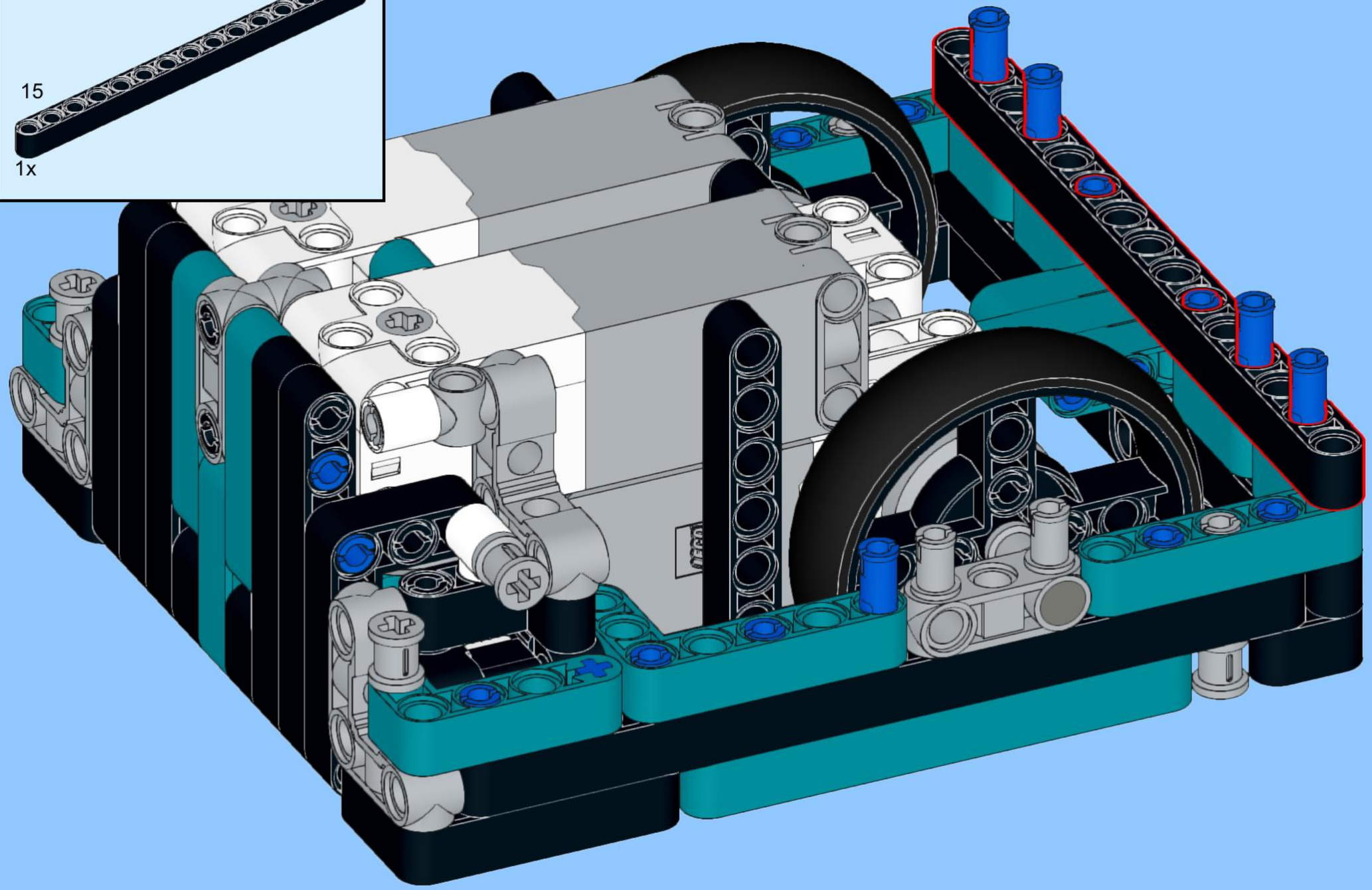

74

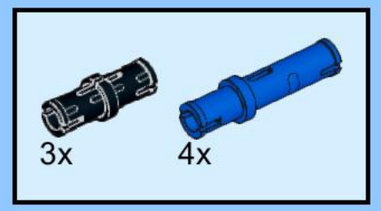

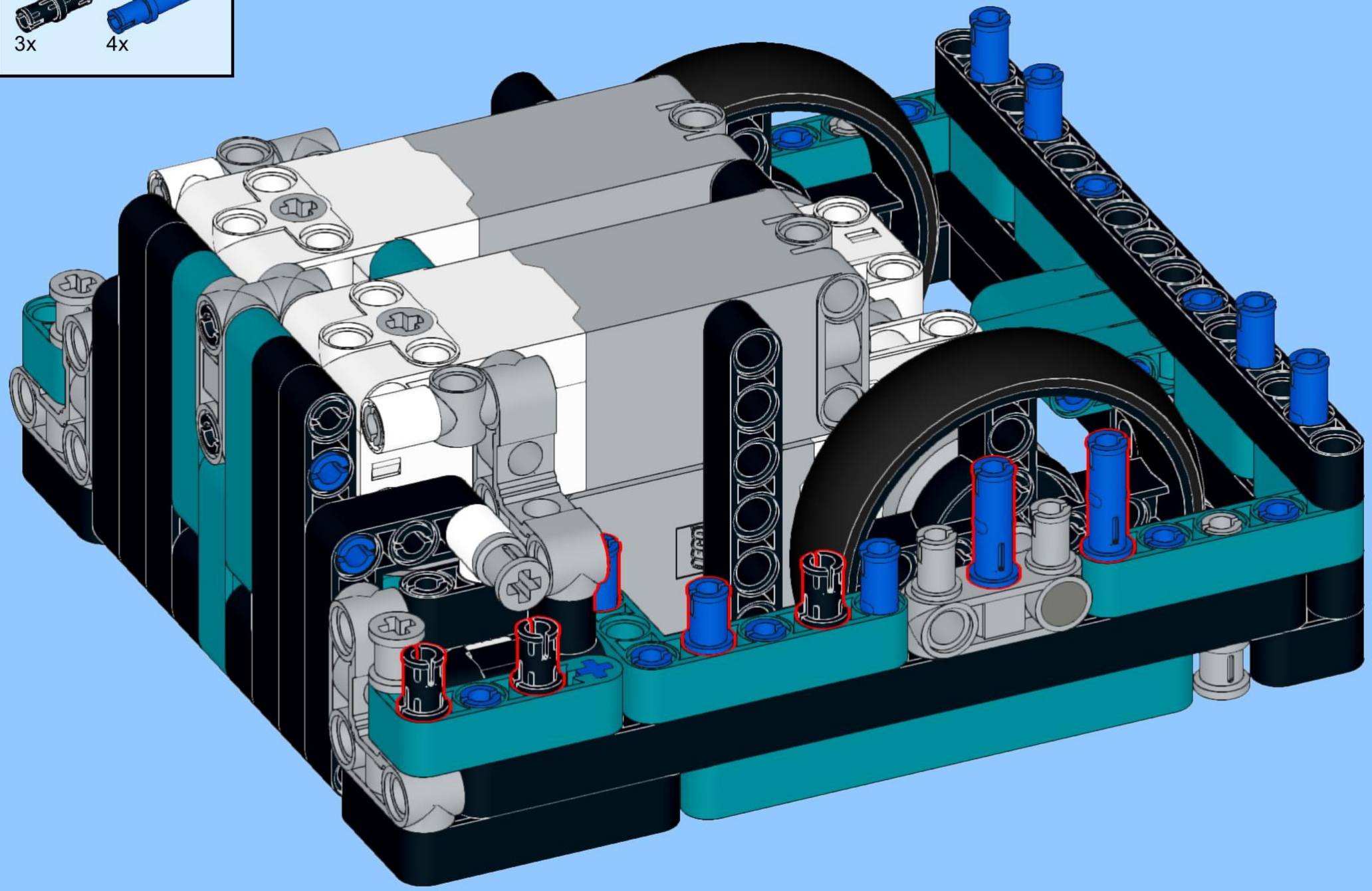

75

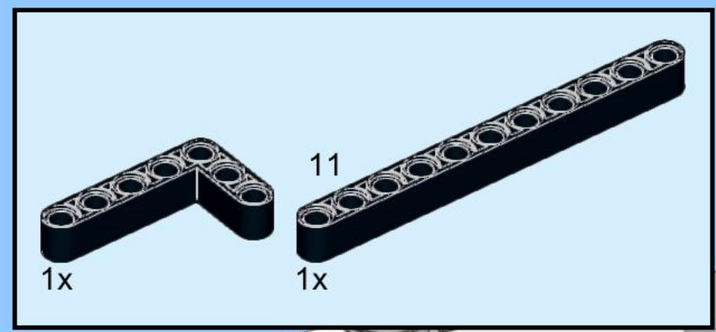

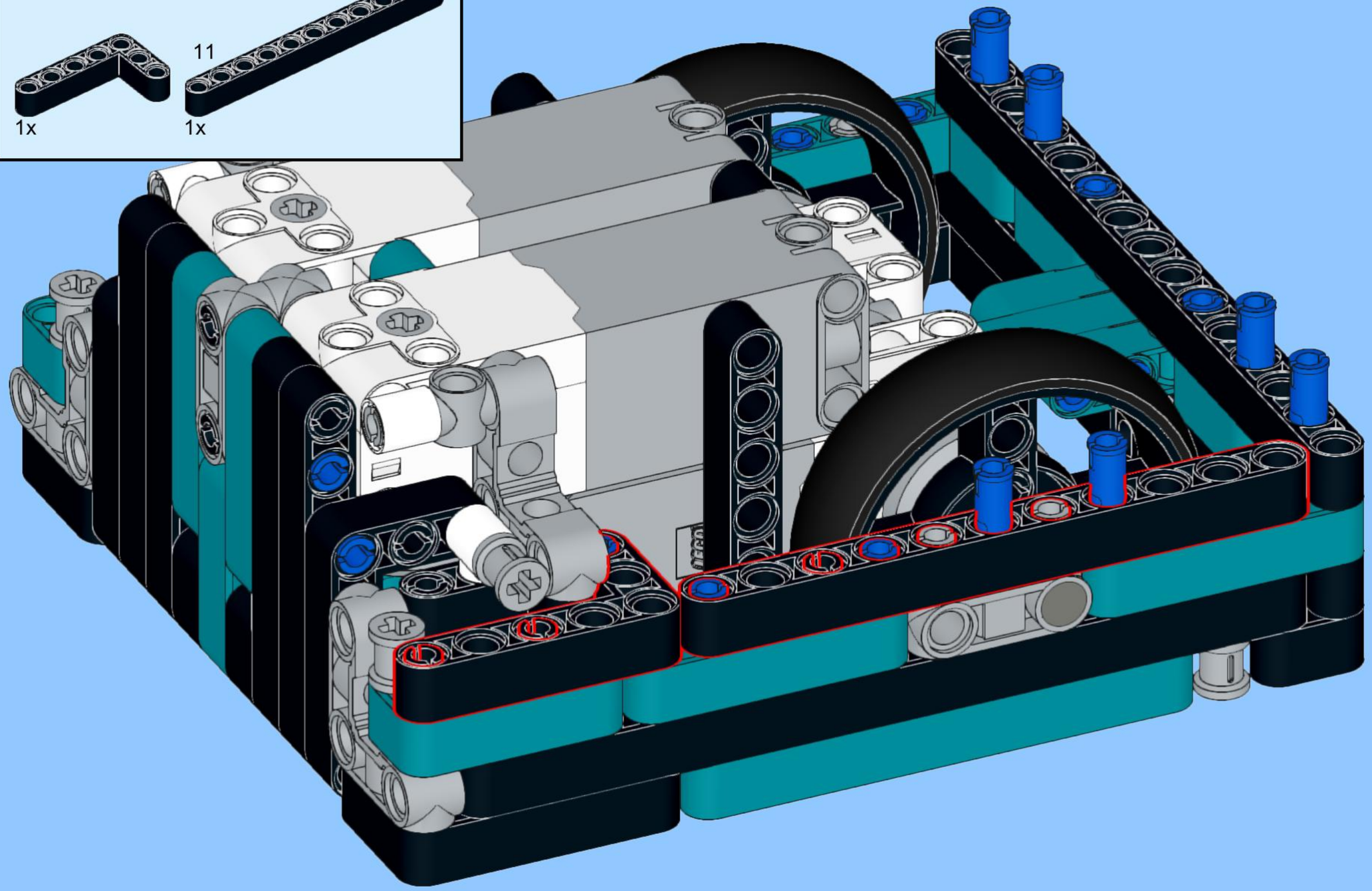

76

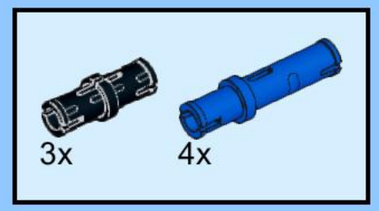

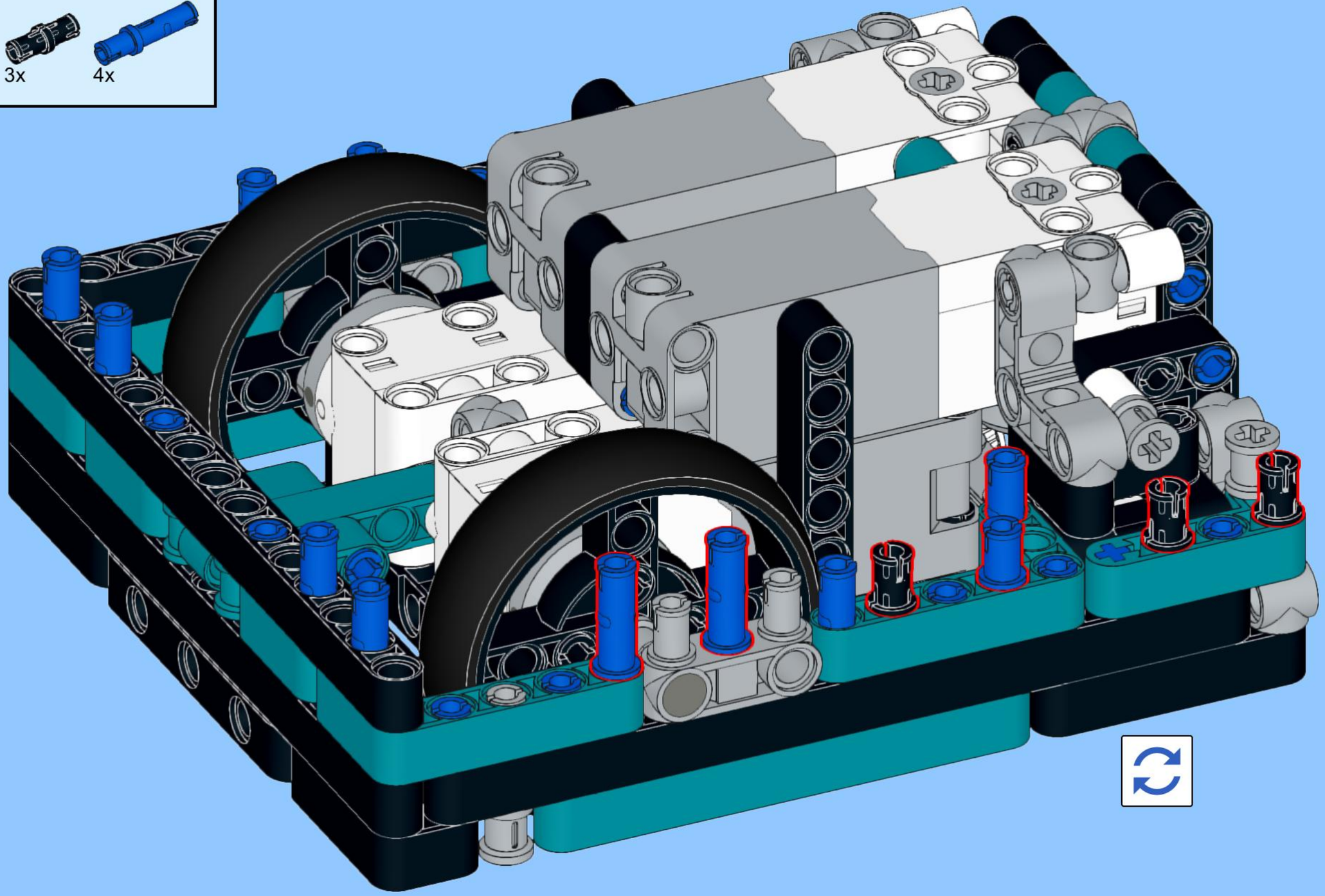

77

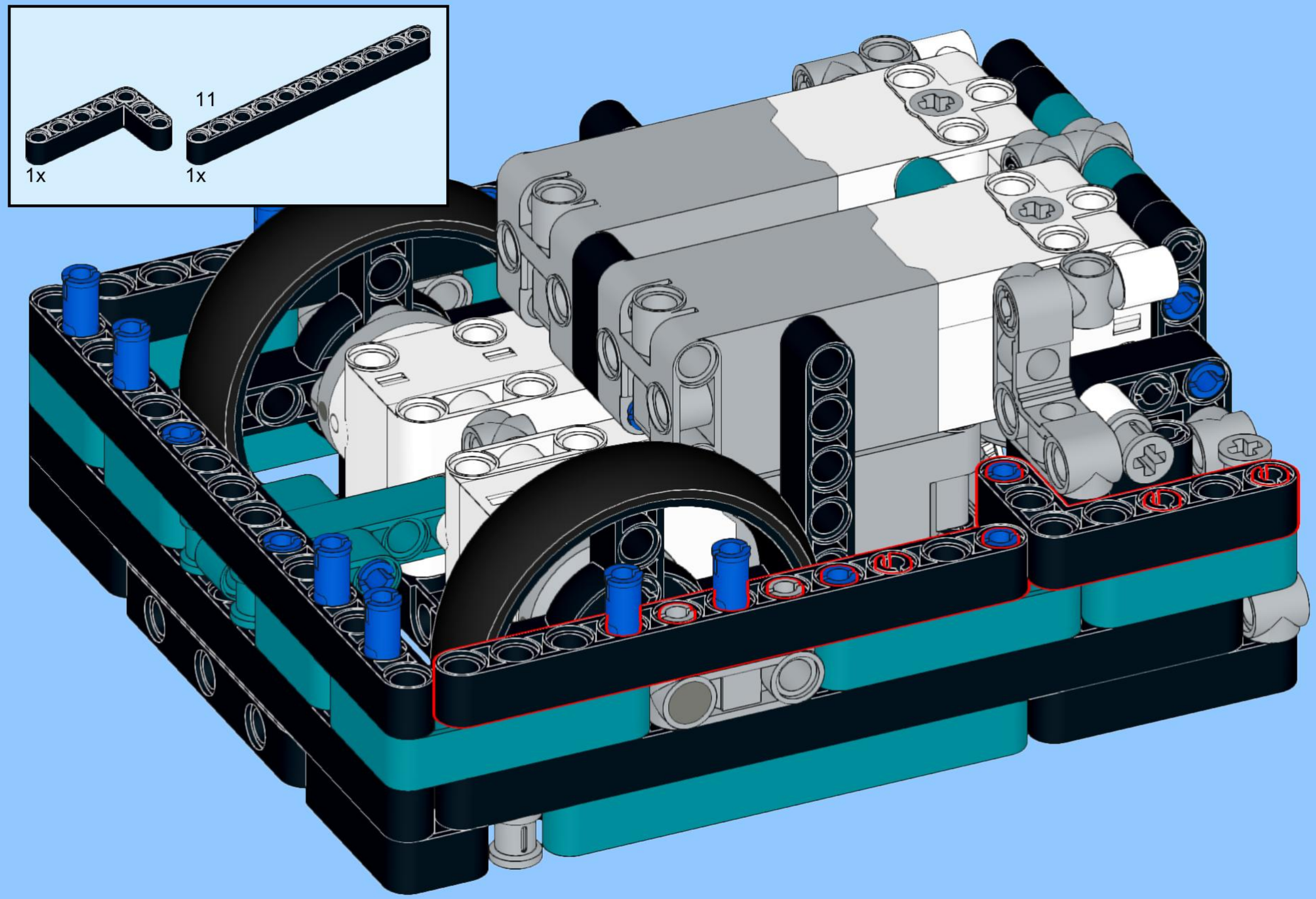

78

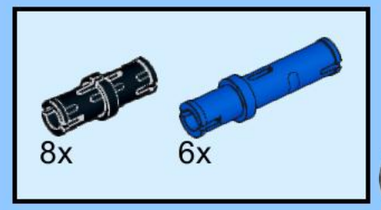

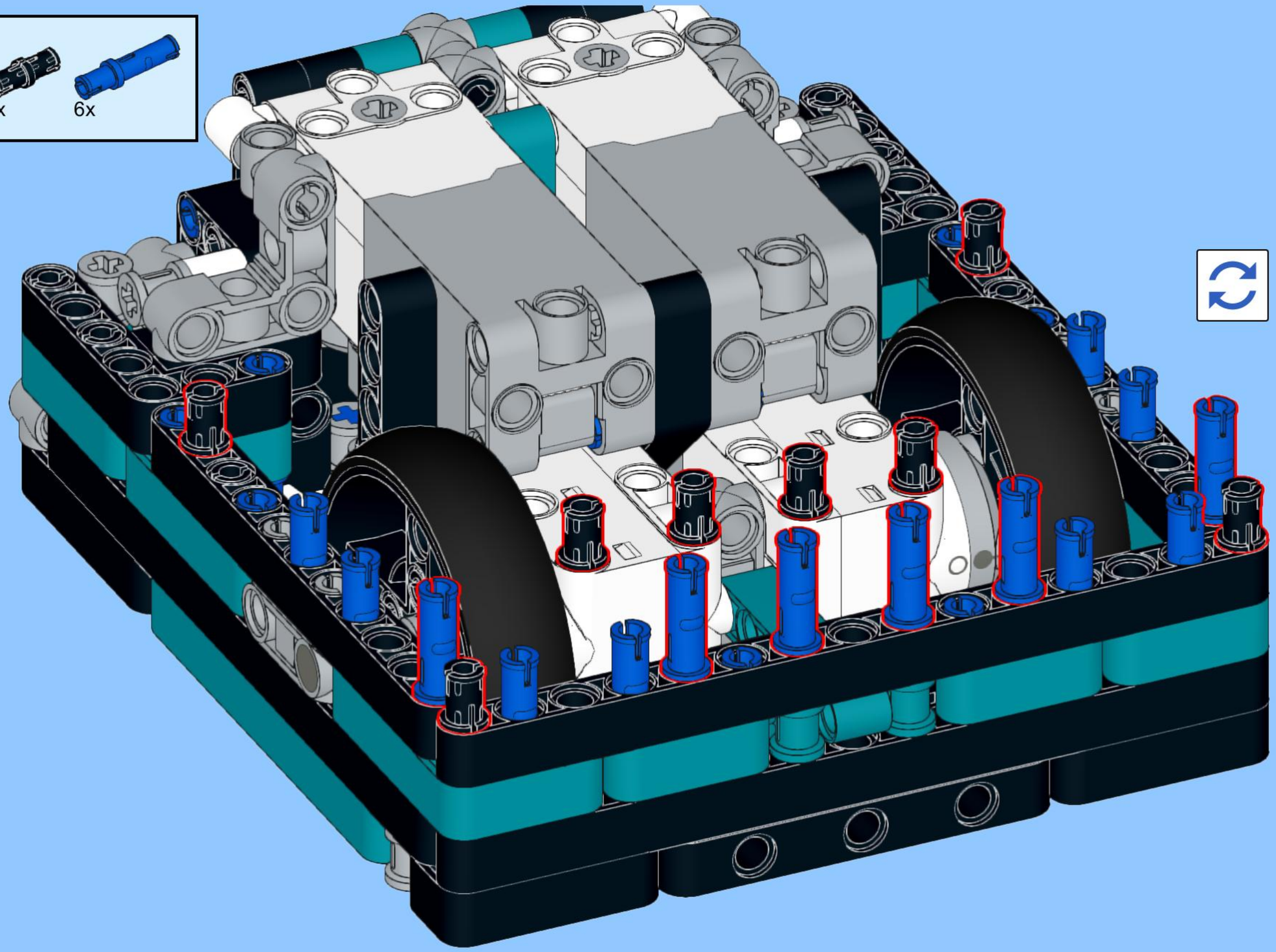

79

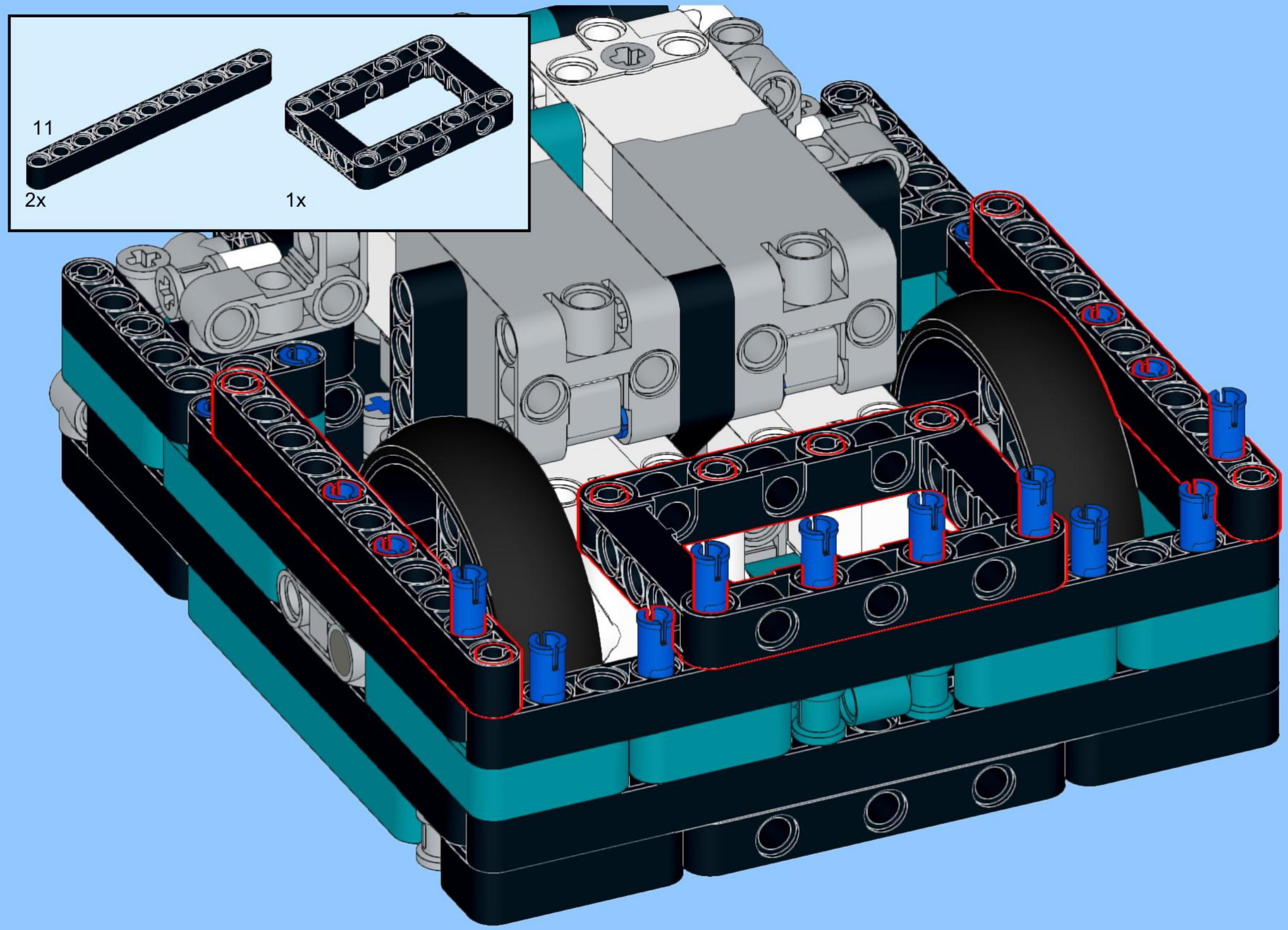

80

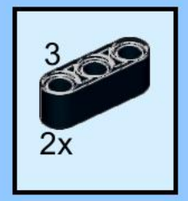

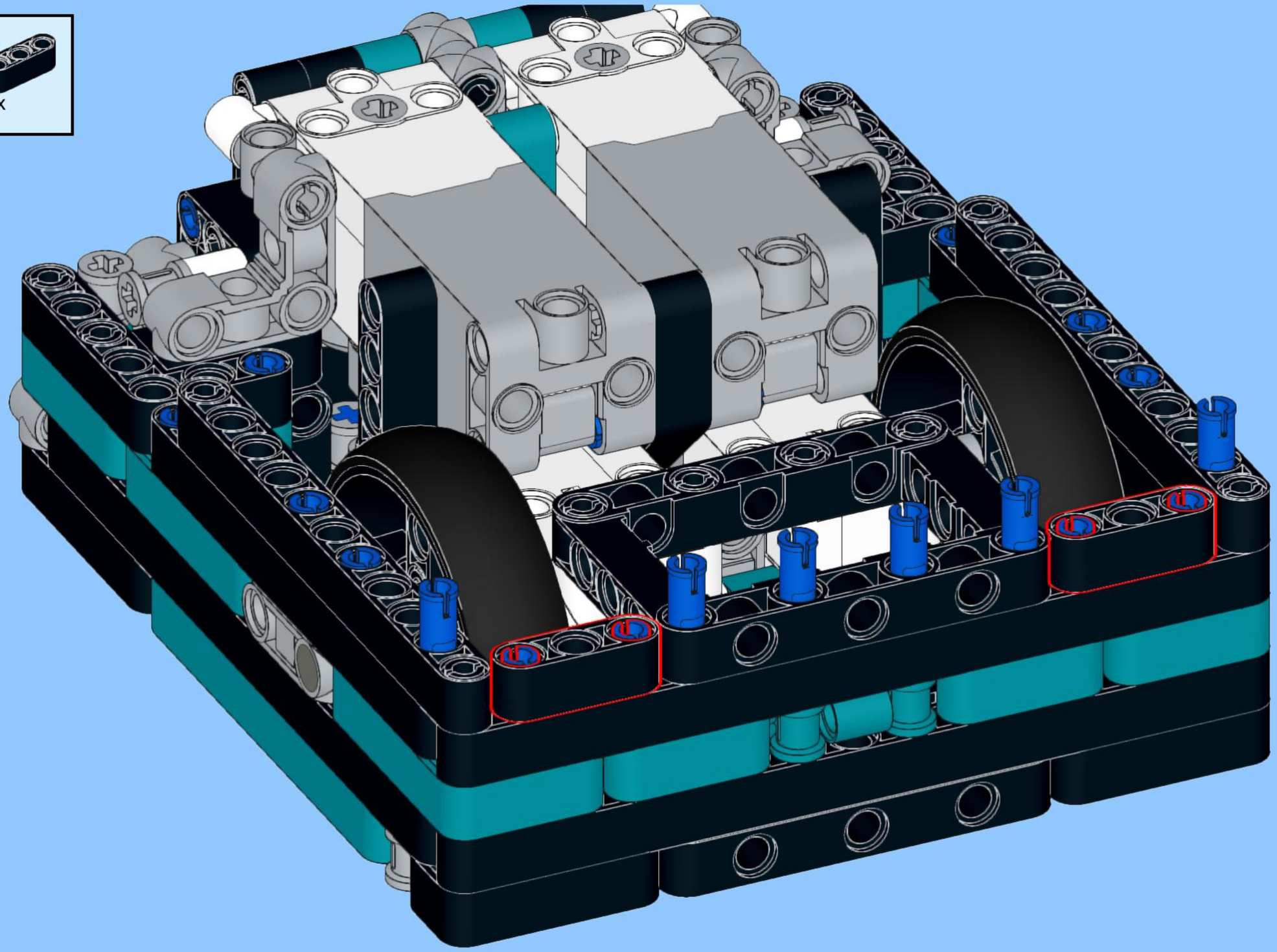

81

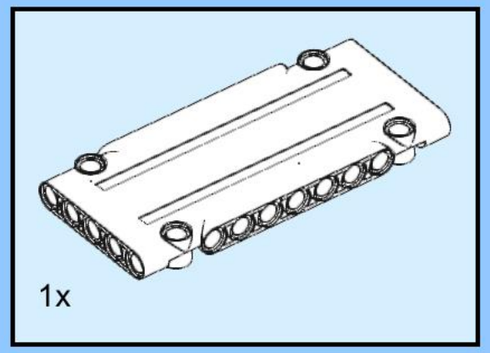

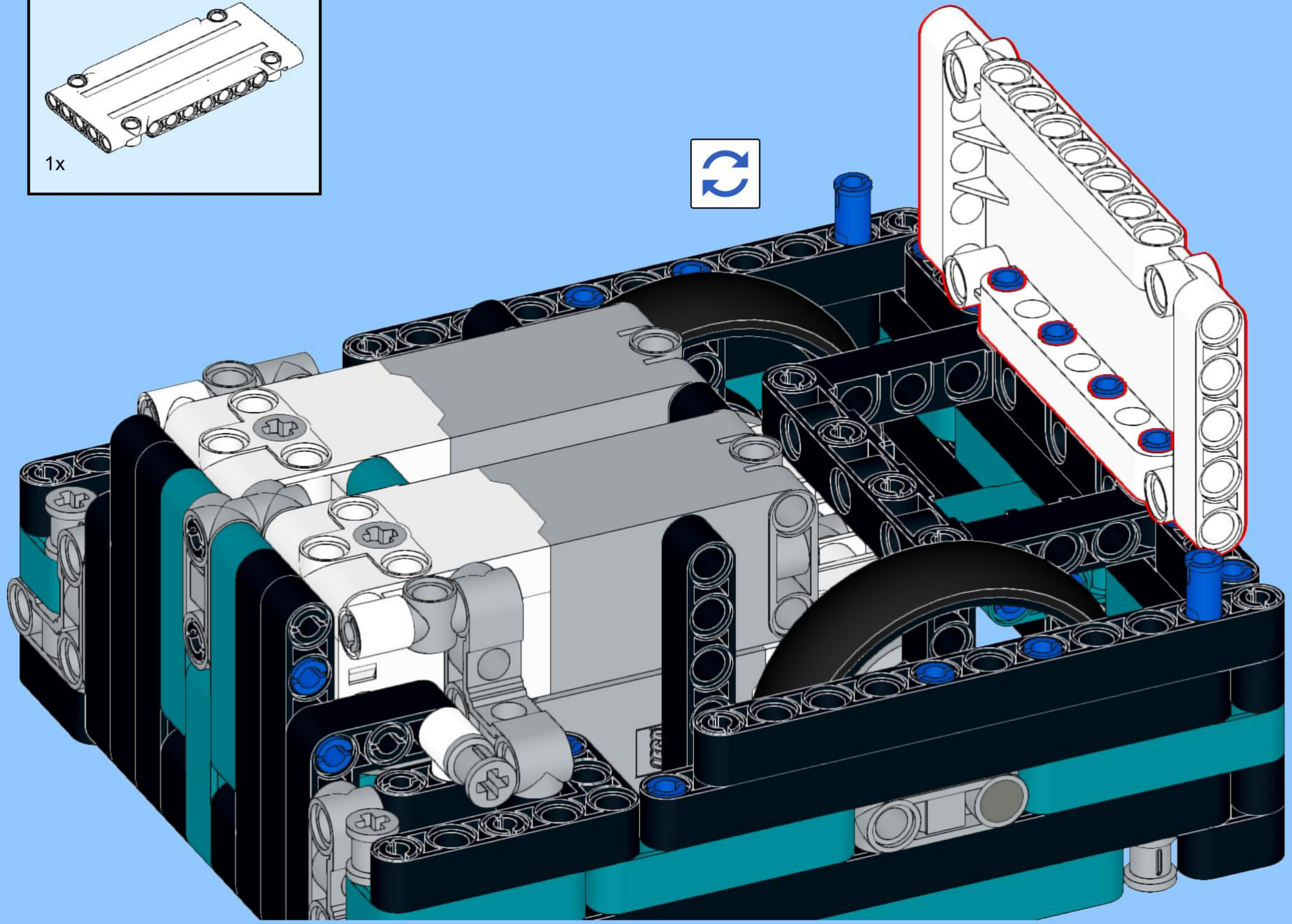

82

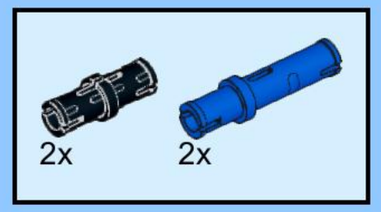

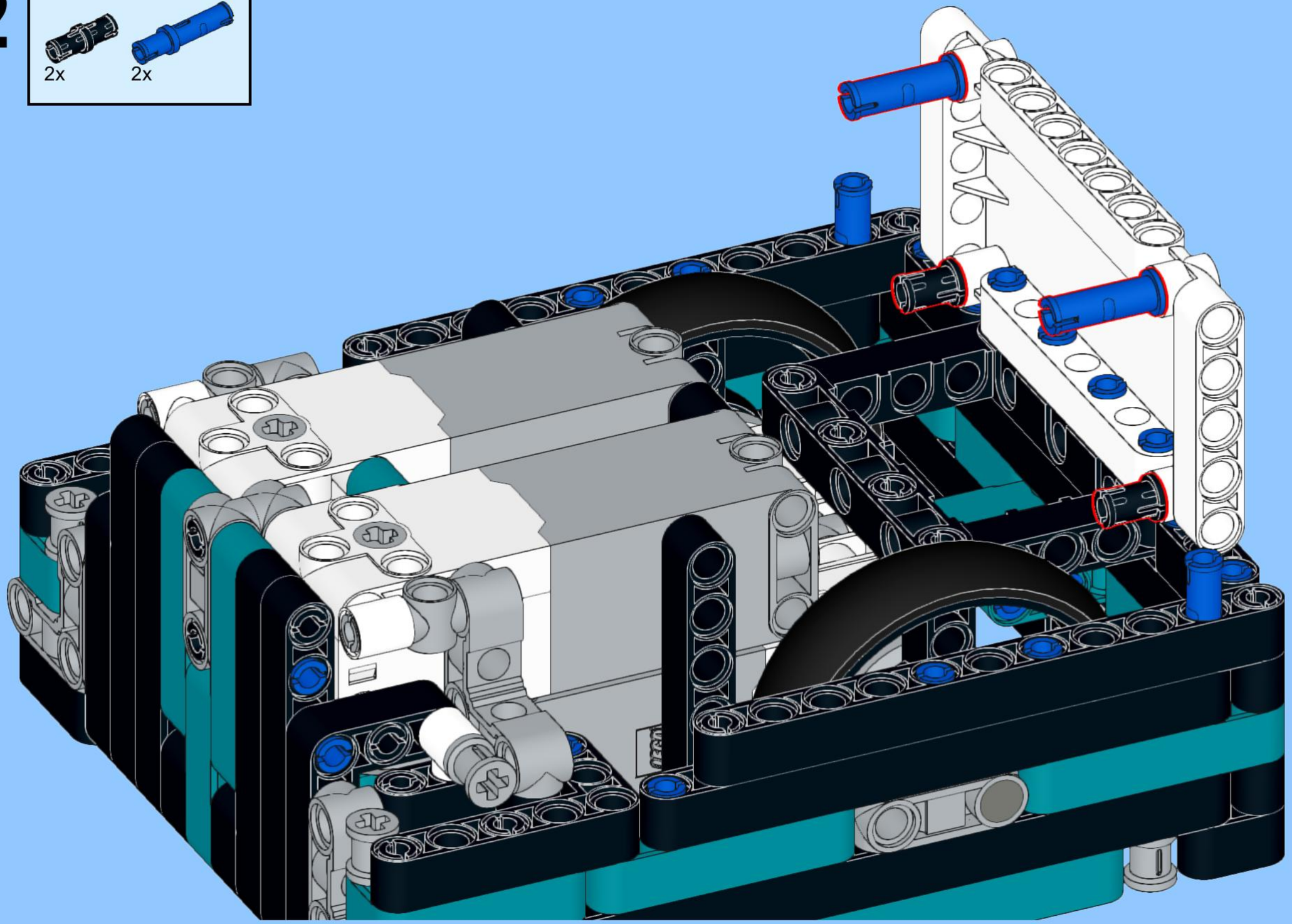

83

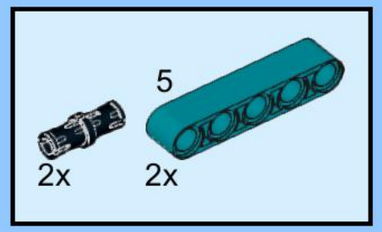

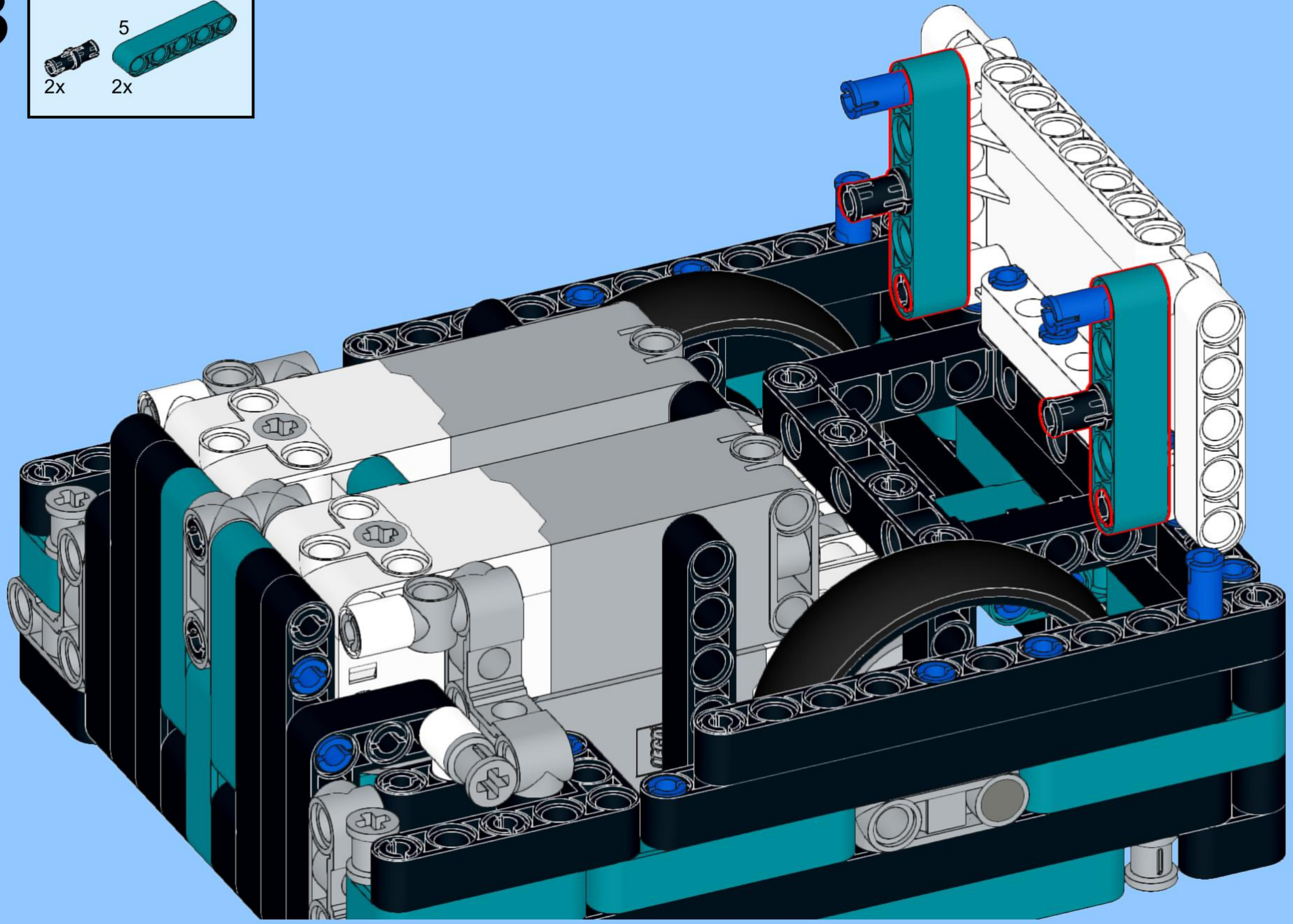

84

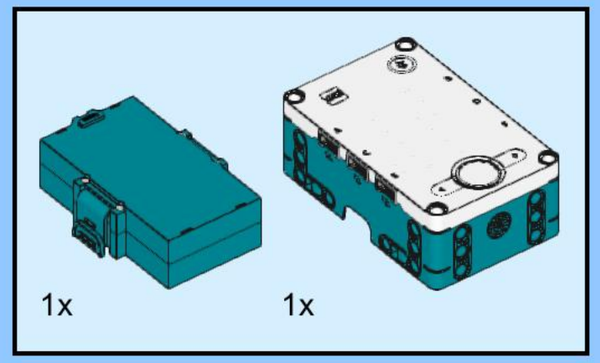

85

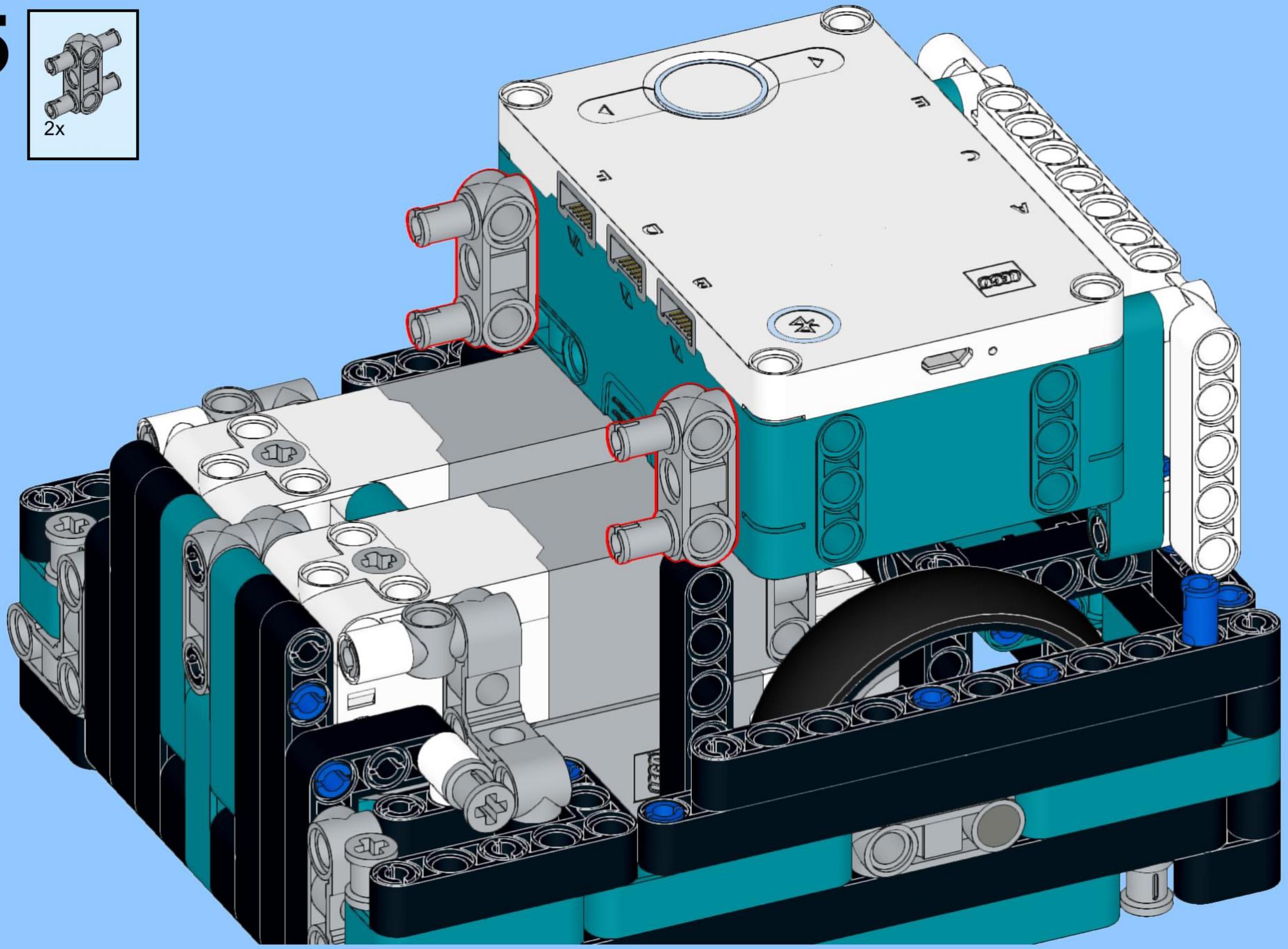

86

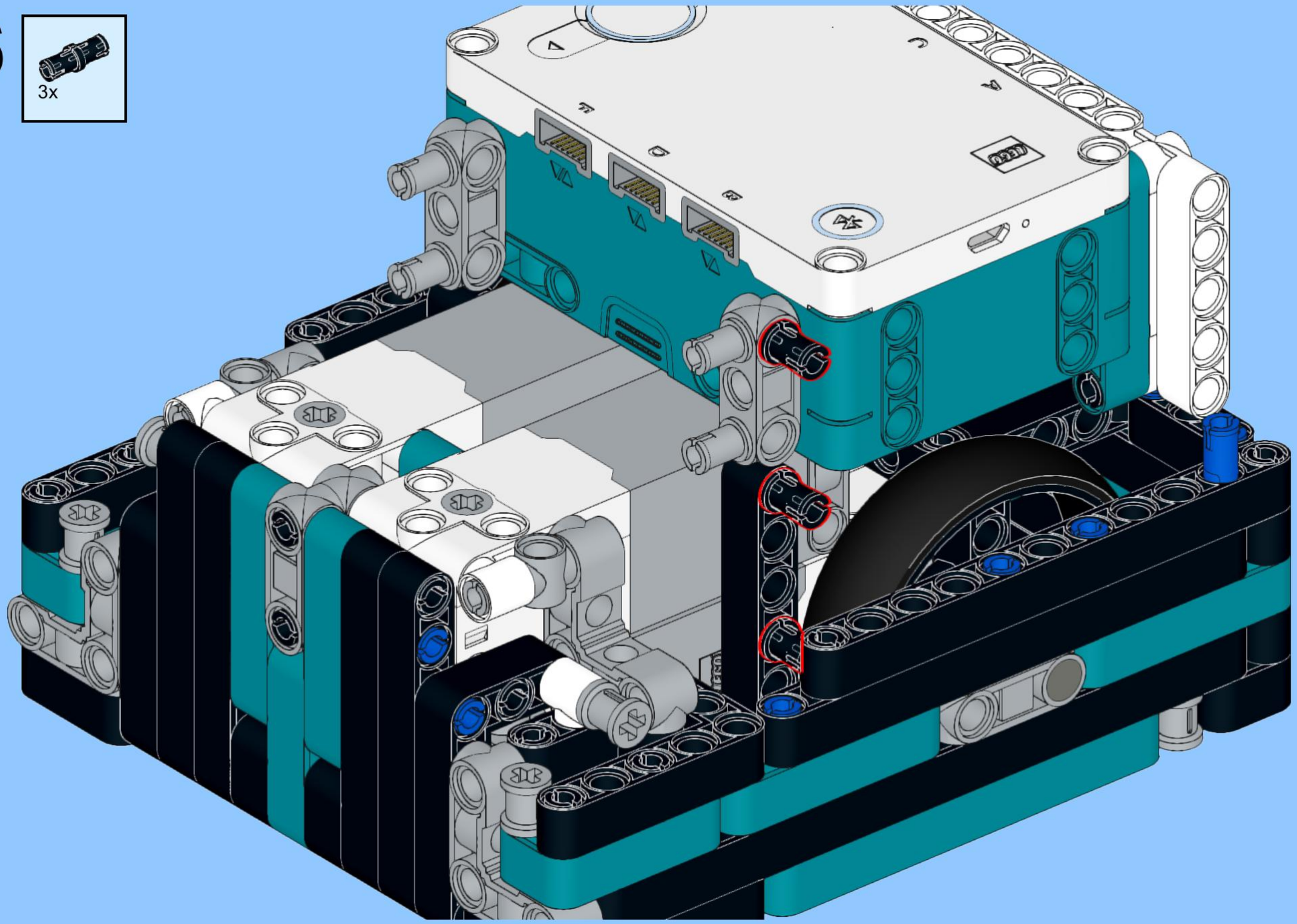

87

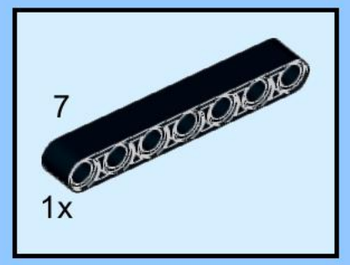

88

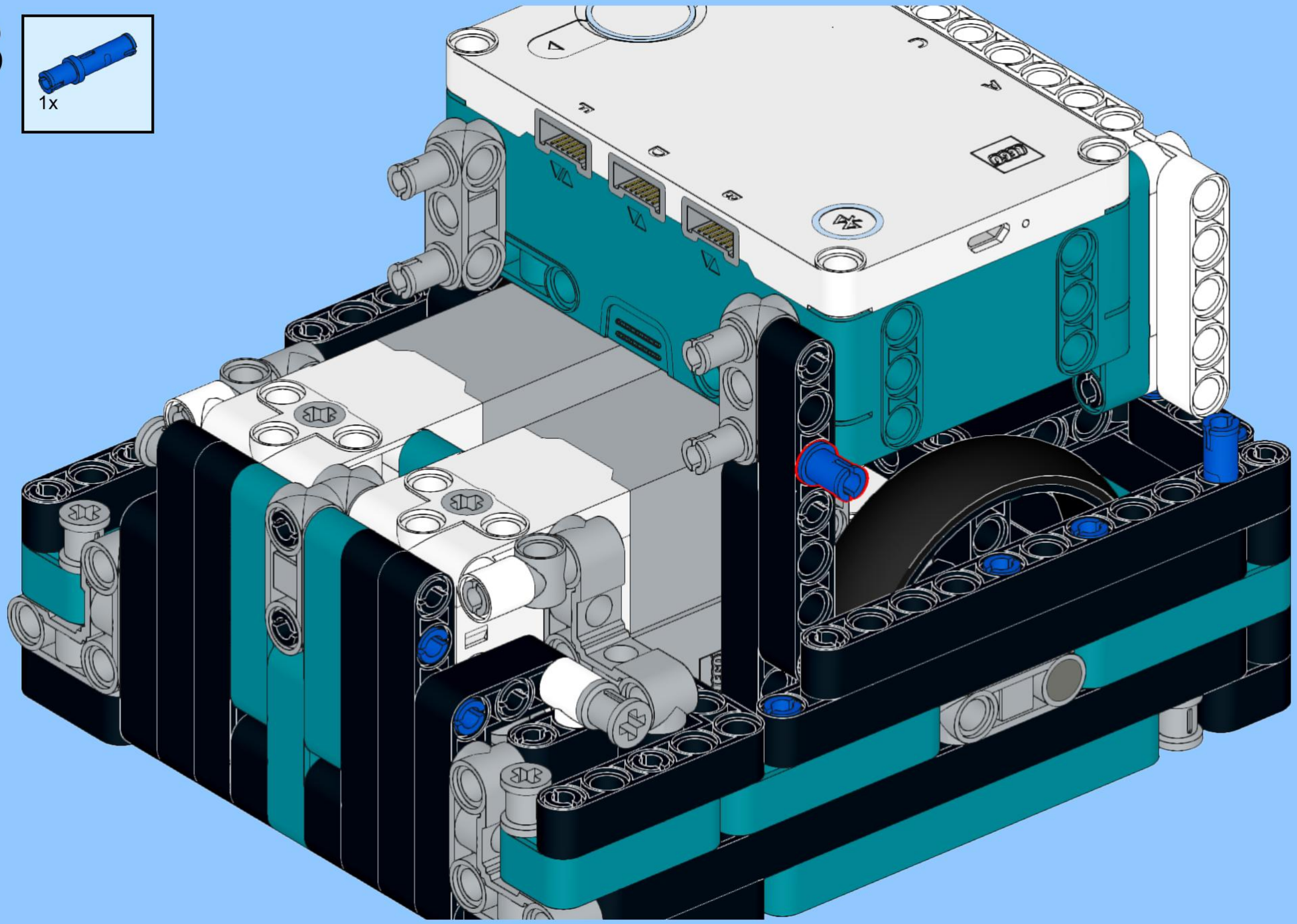

89

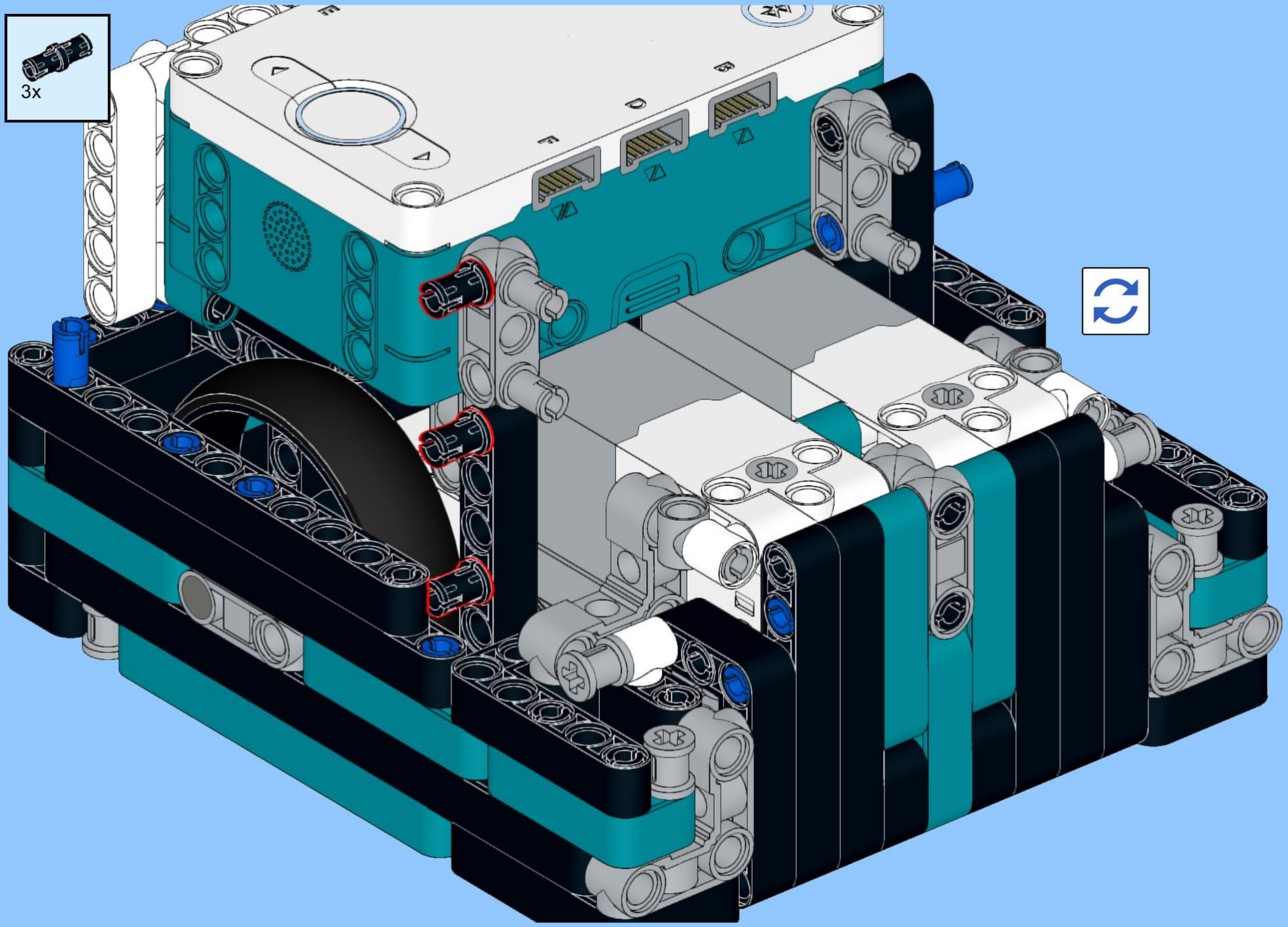

90

91

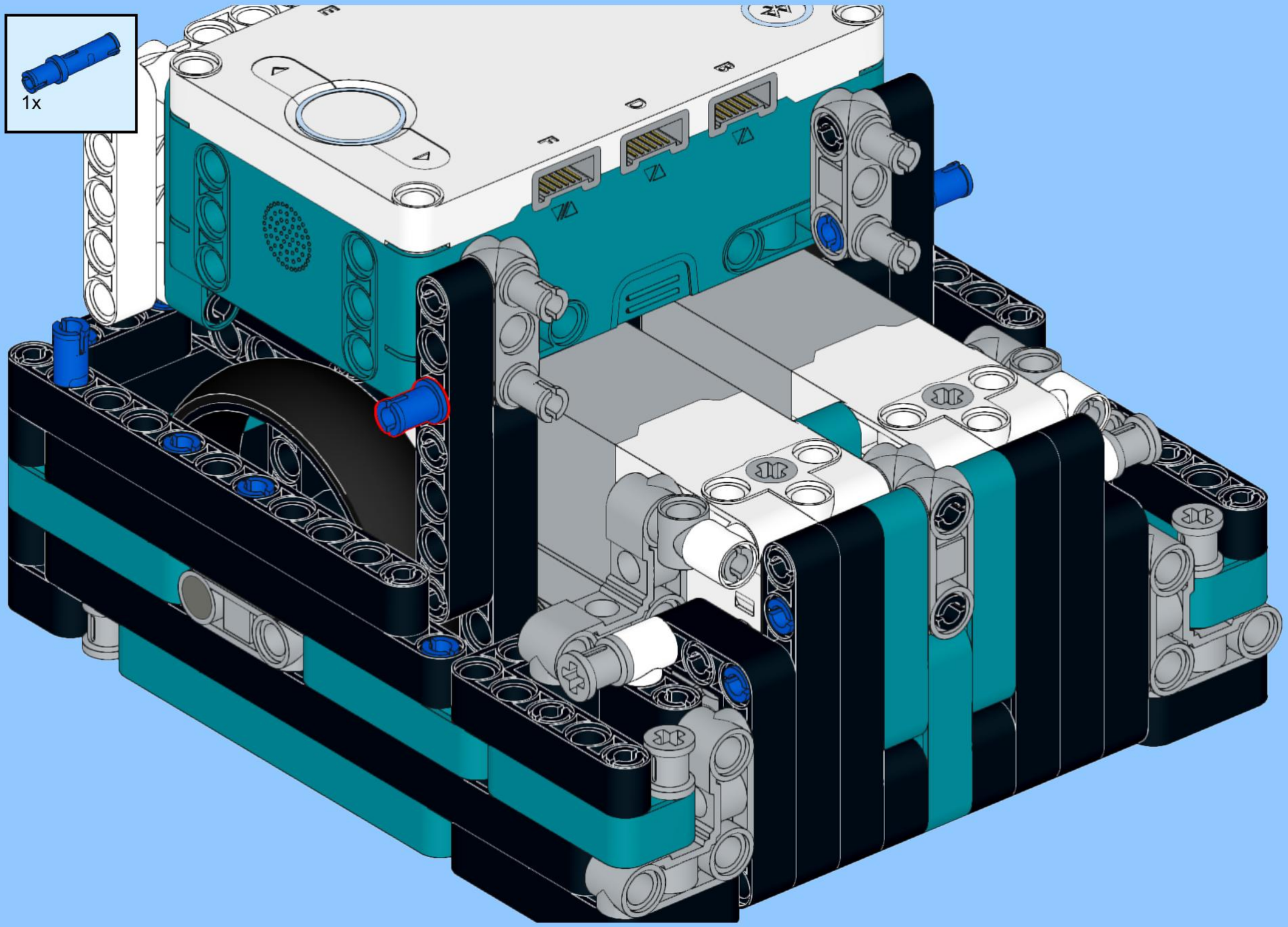

92

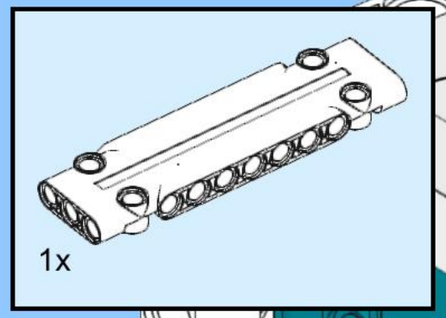

93

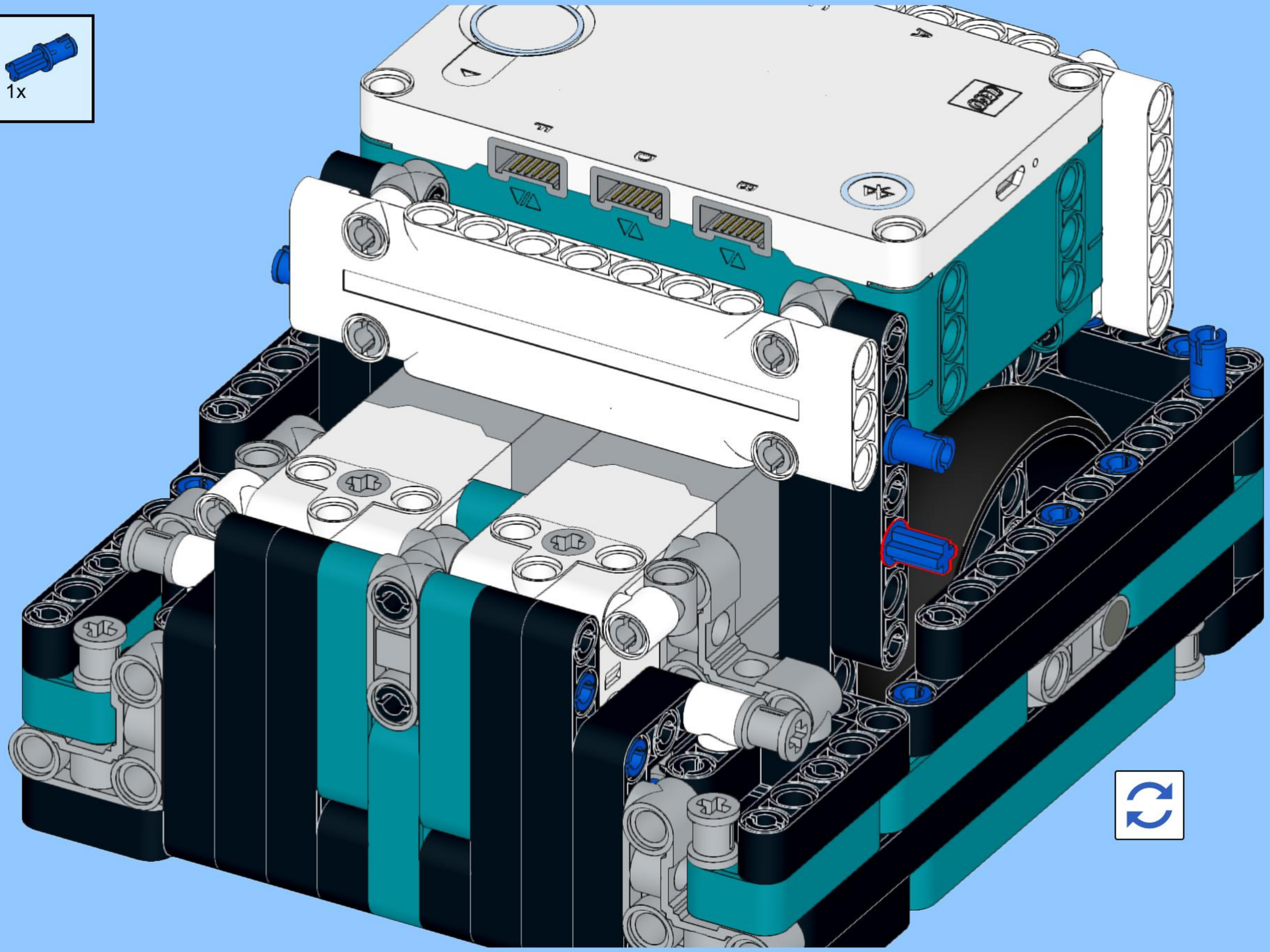

94

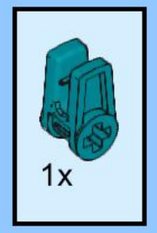

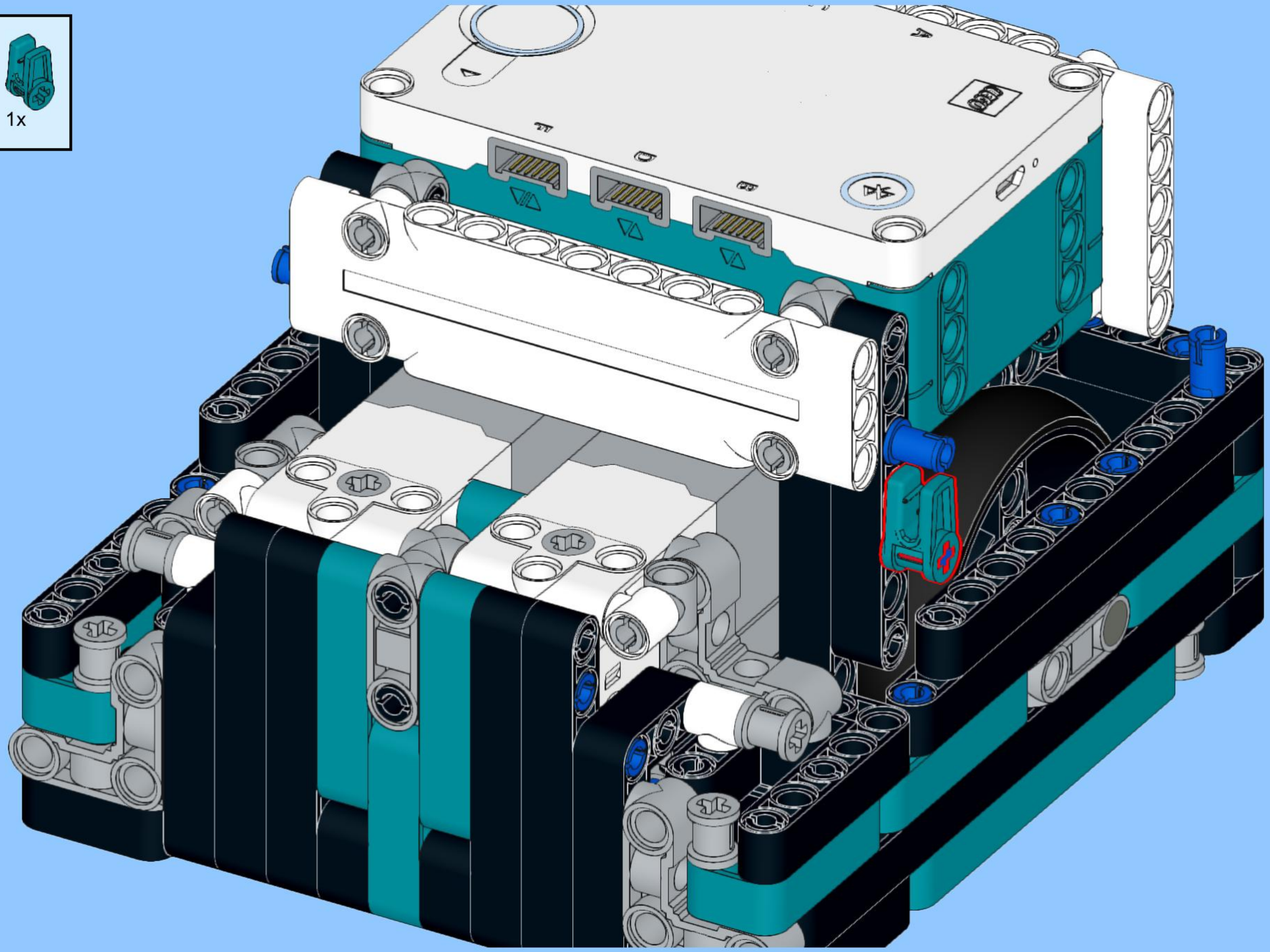

95

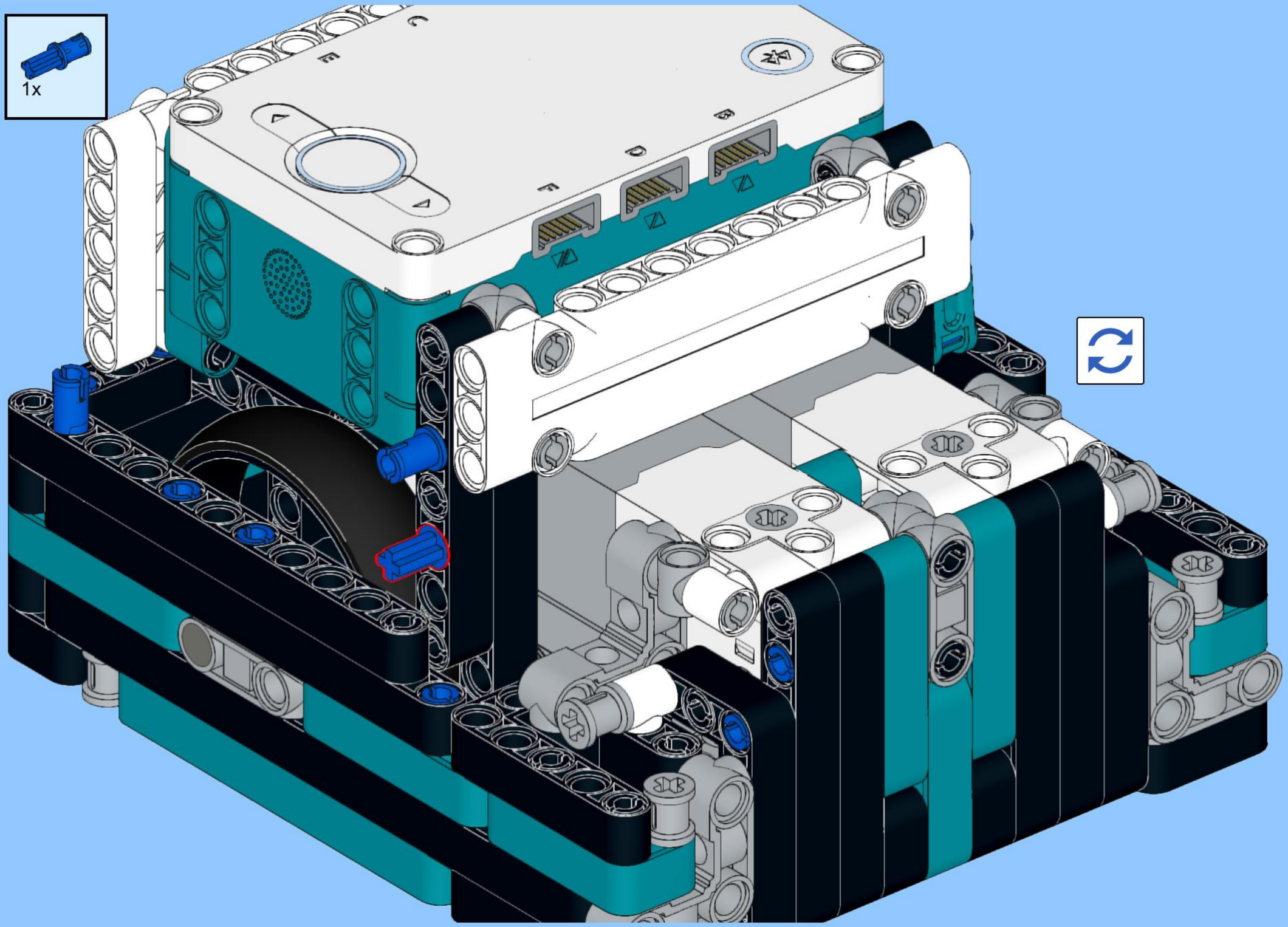

96

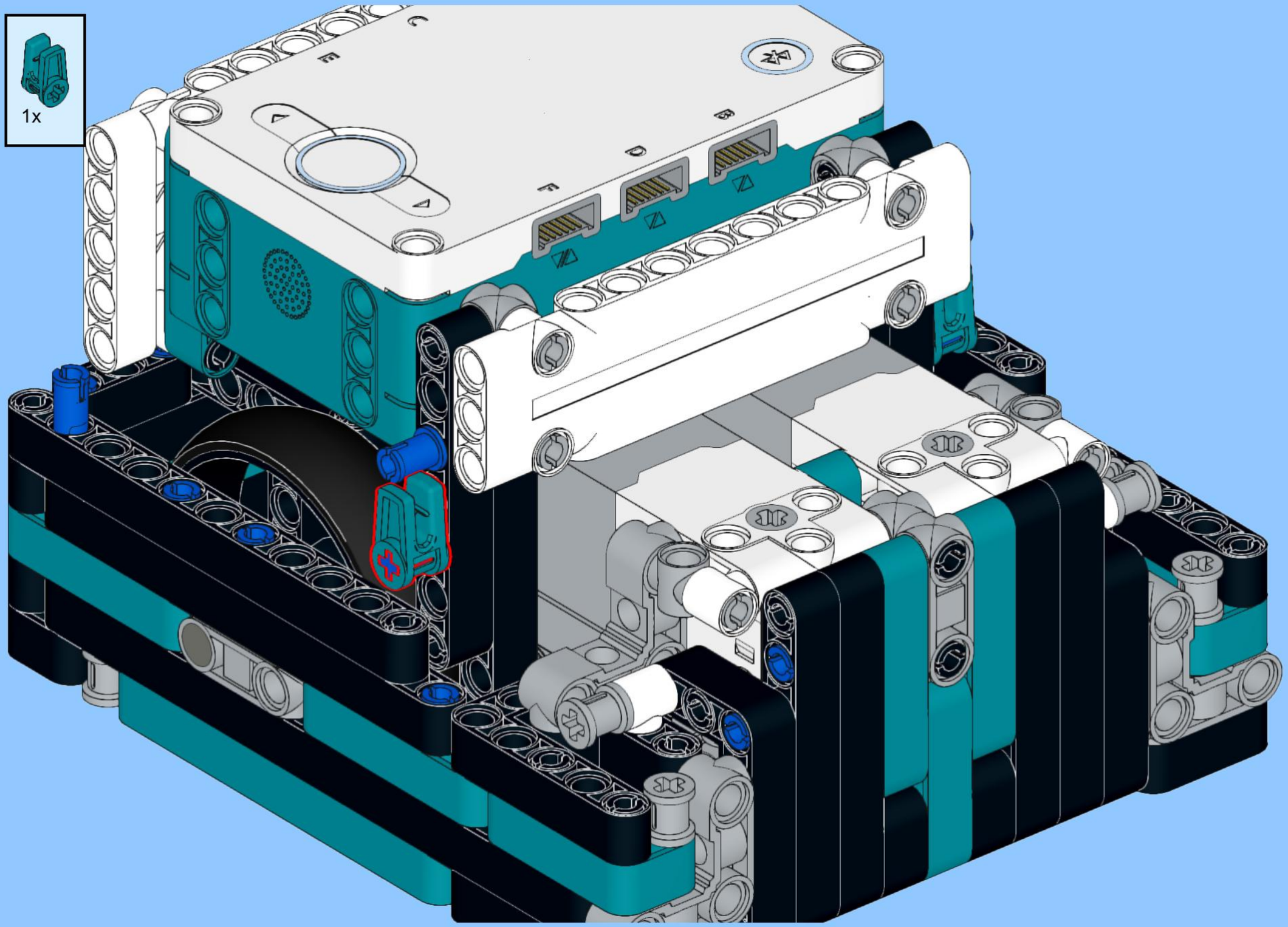

97

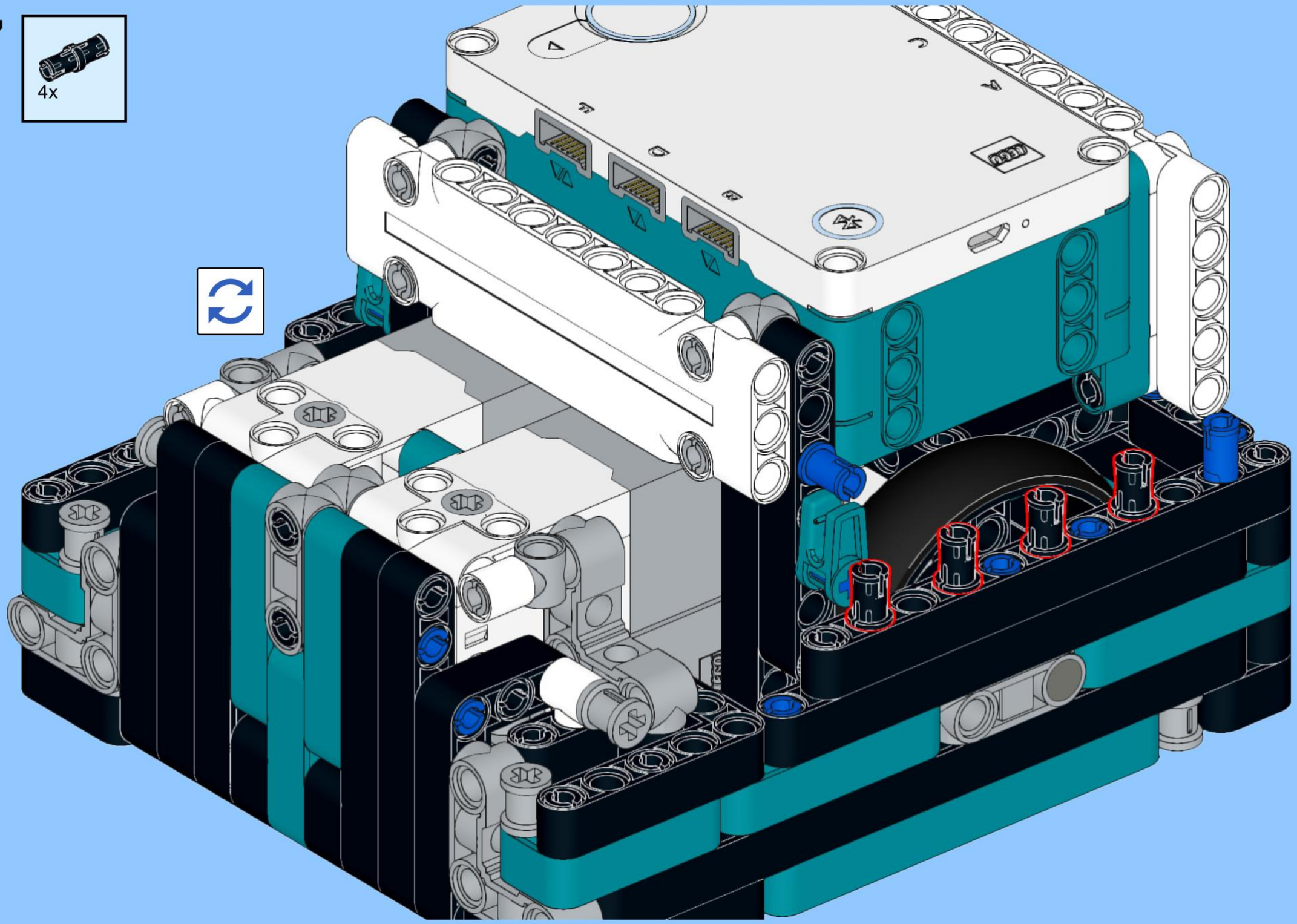

98

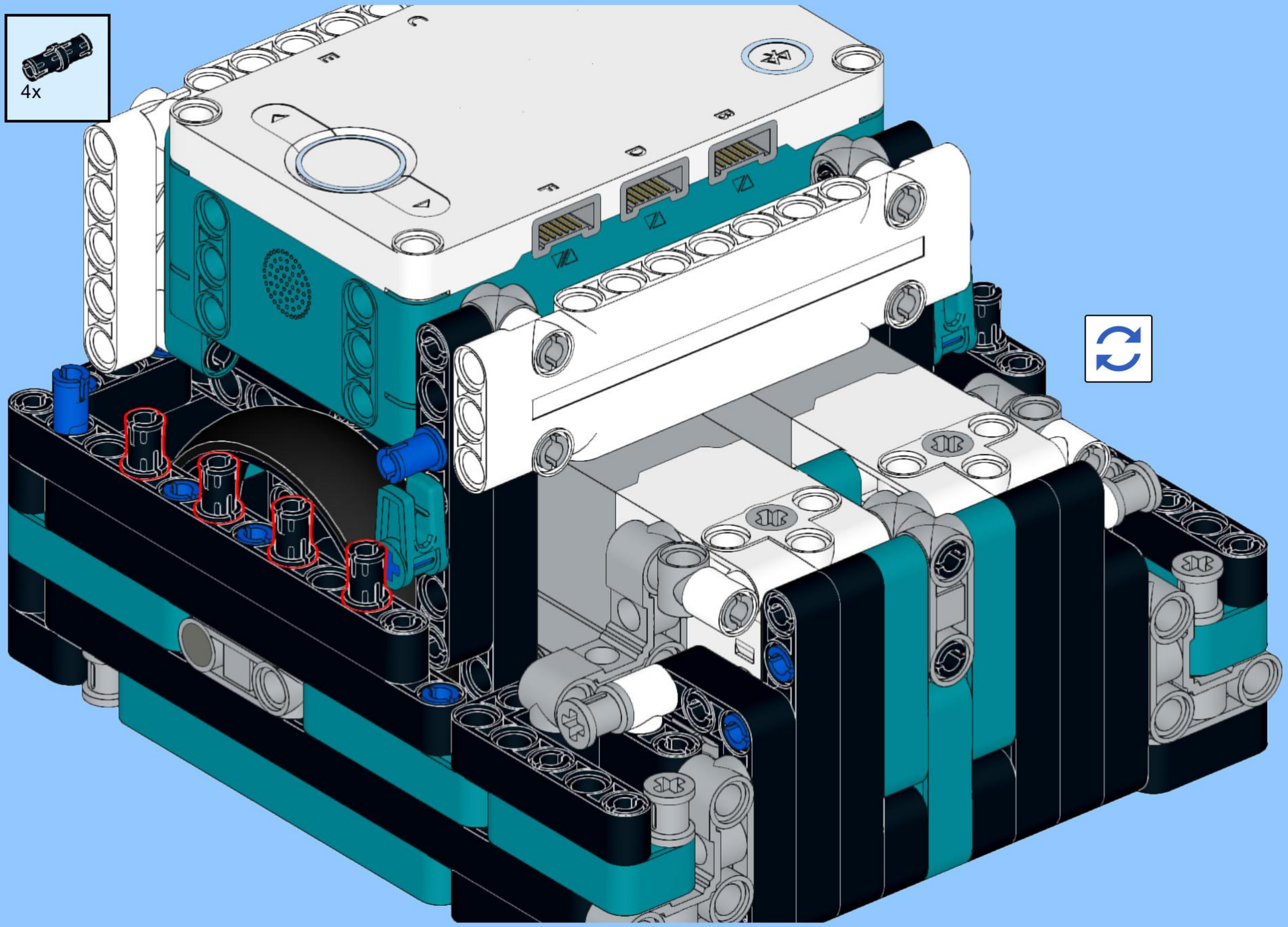

99

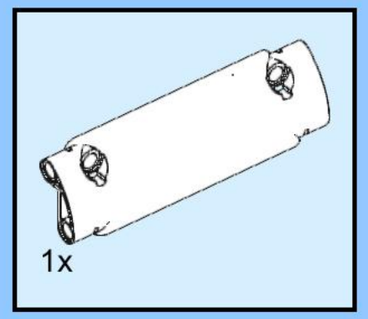

100

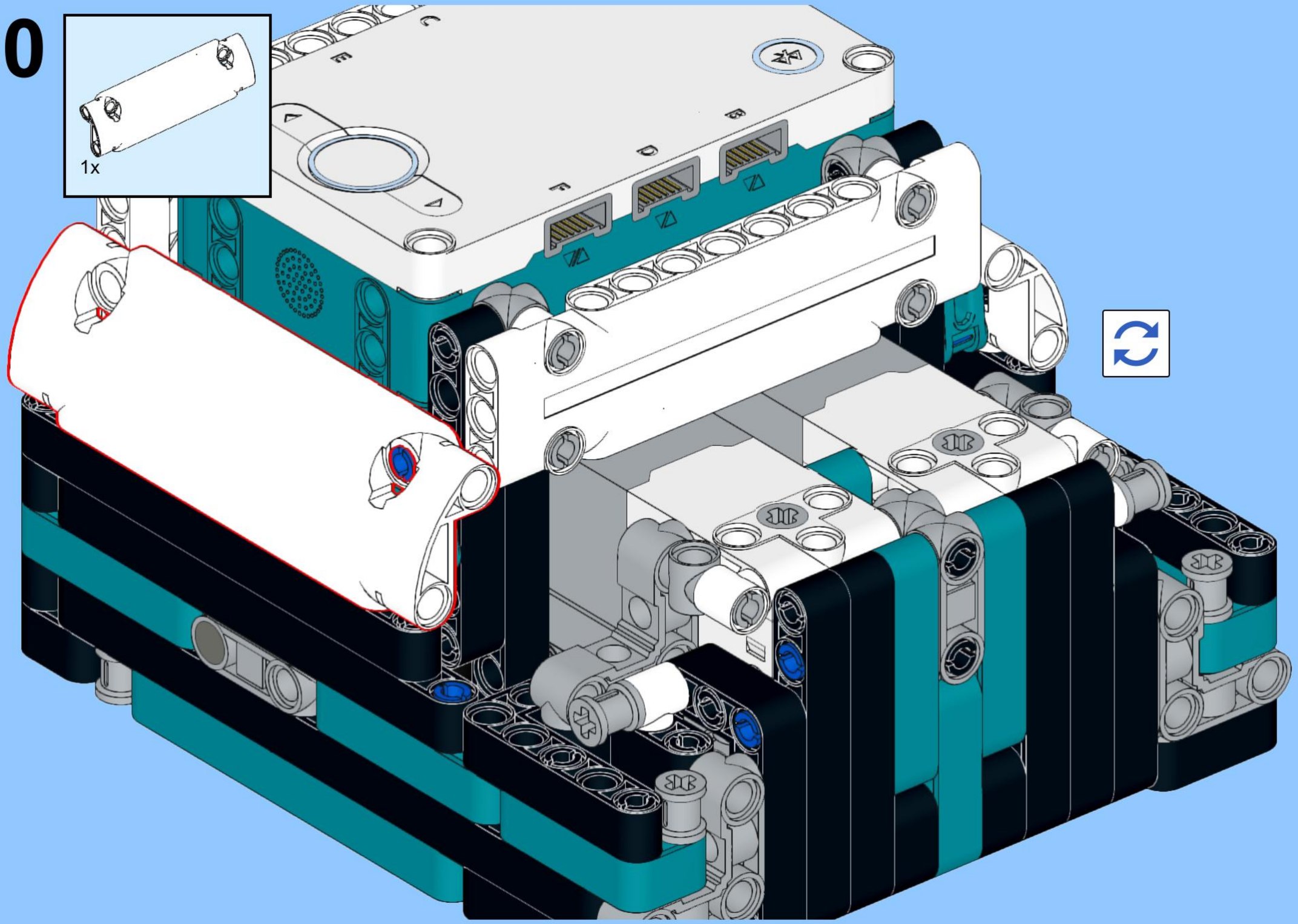

101

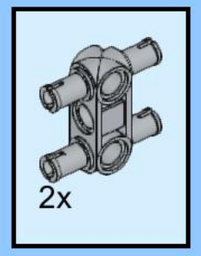

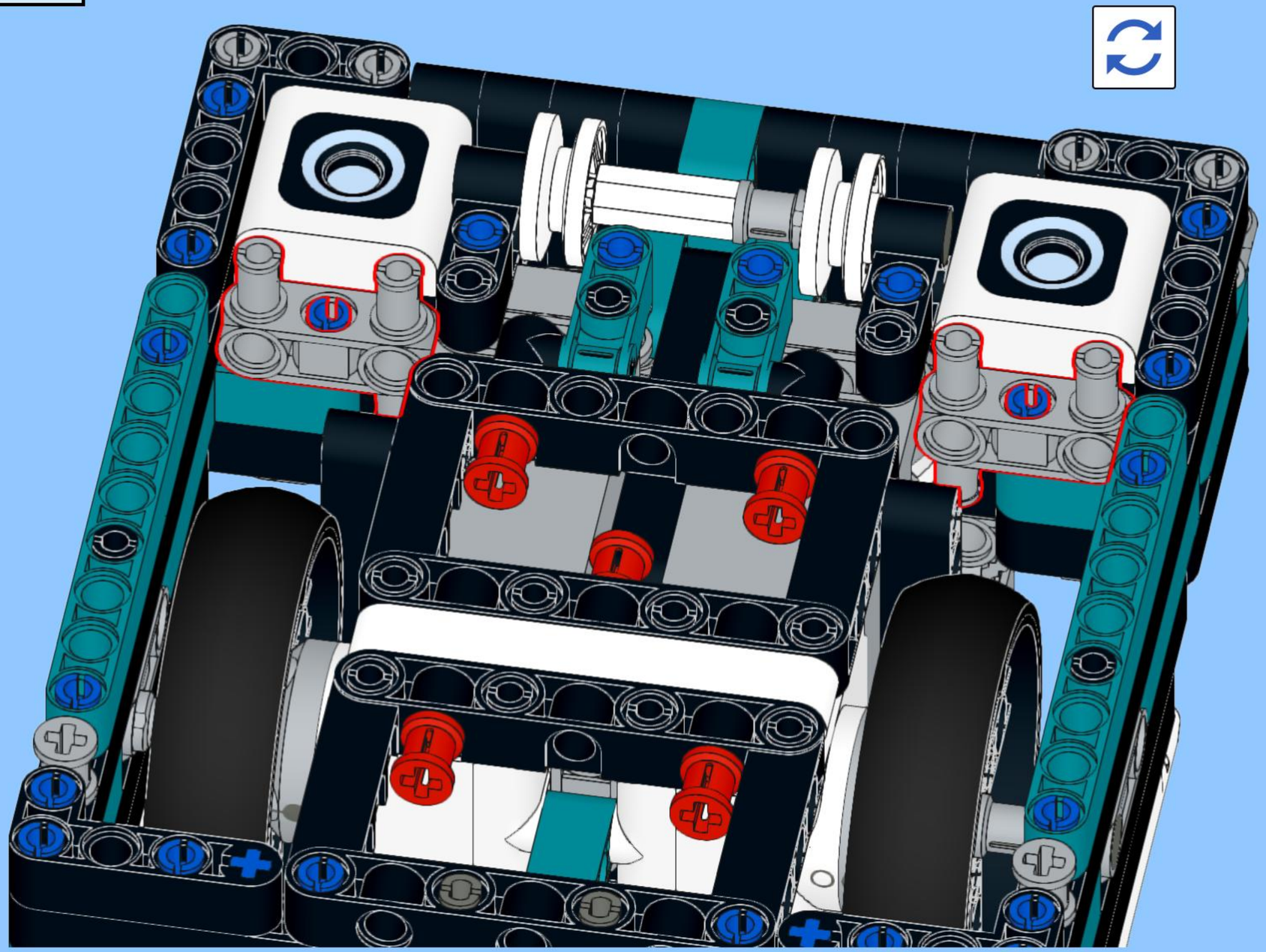

102

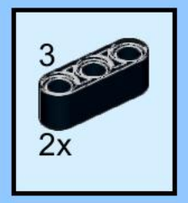

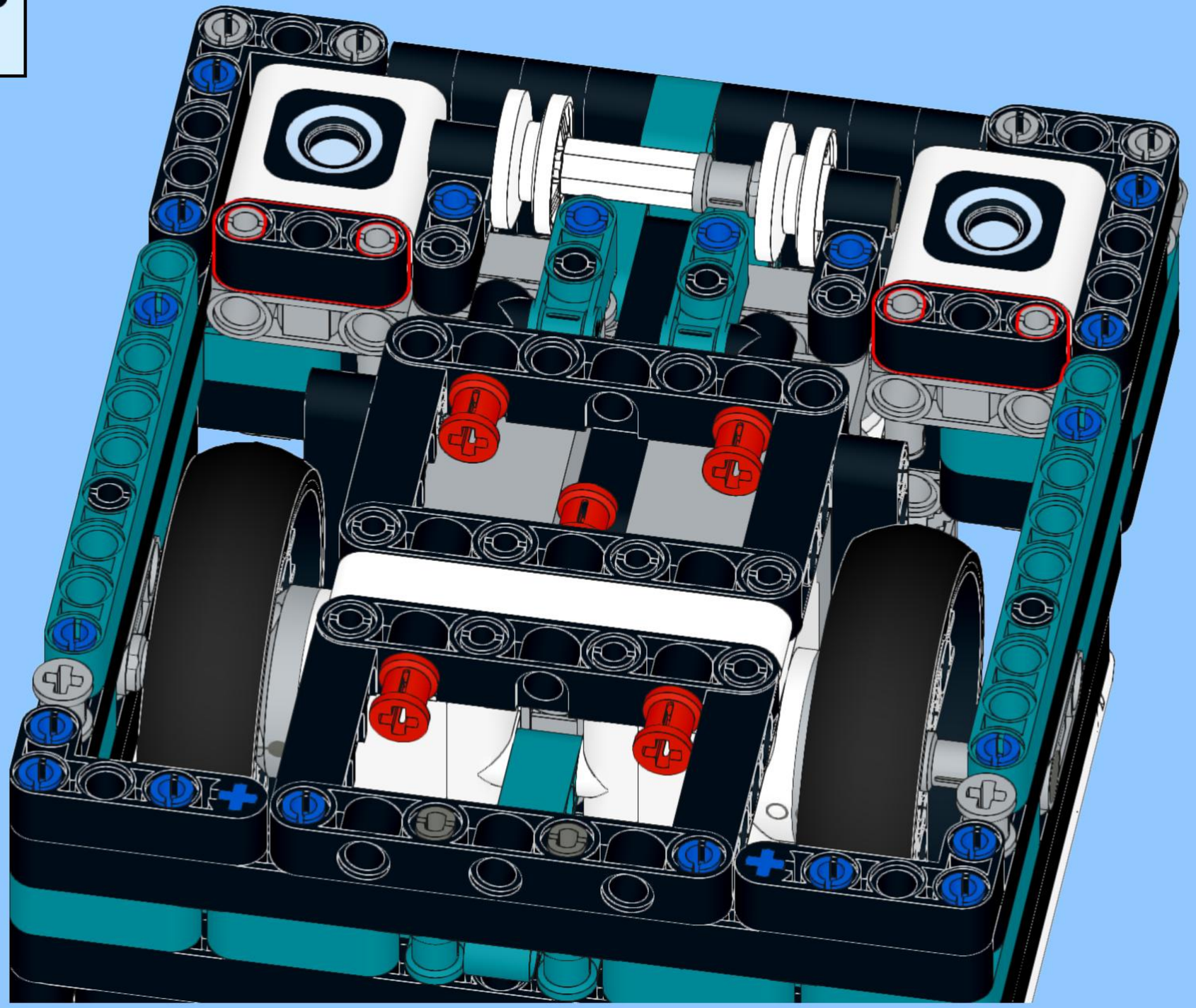

103

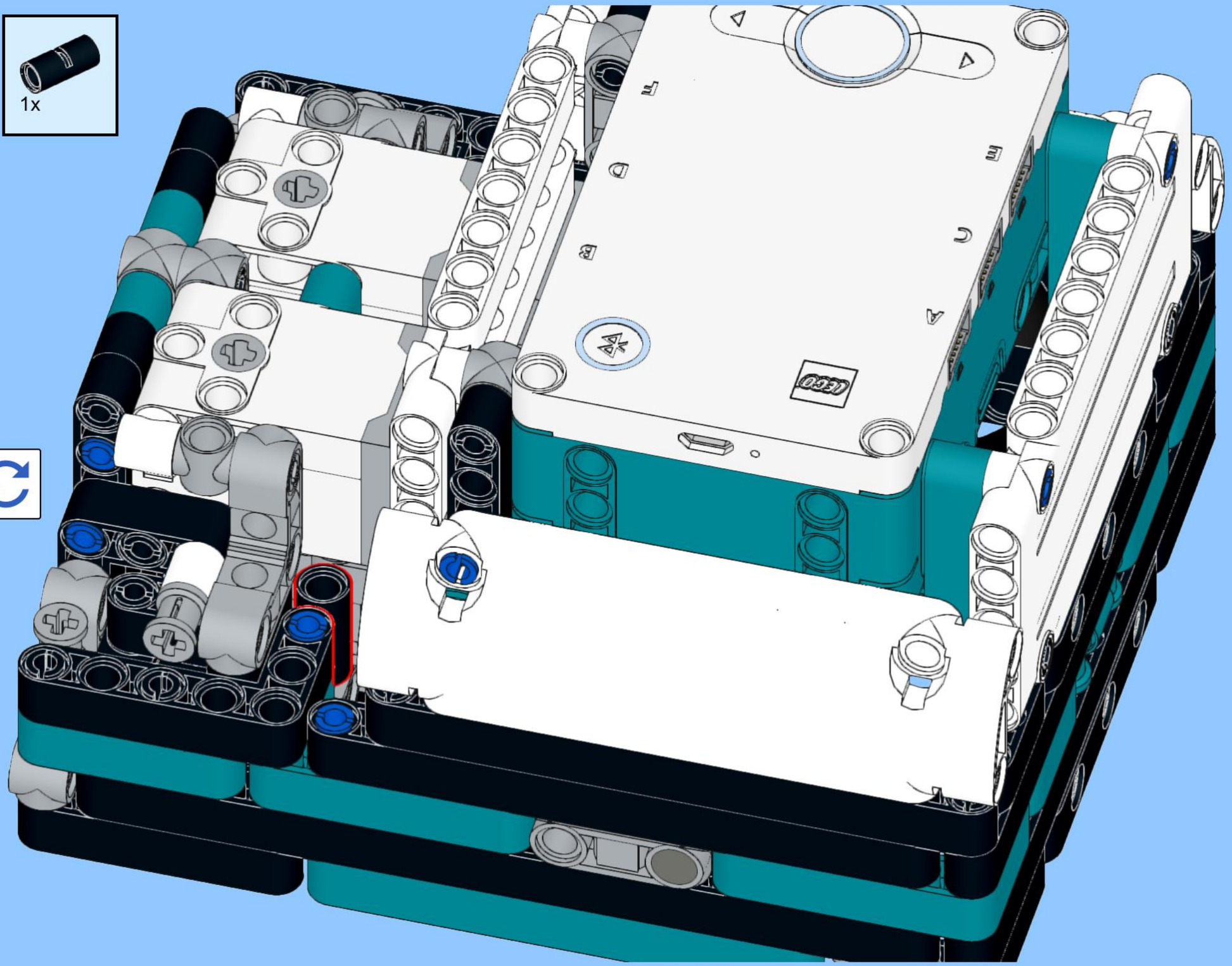

104

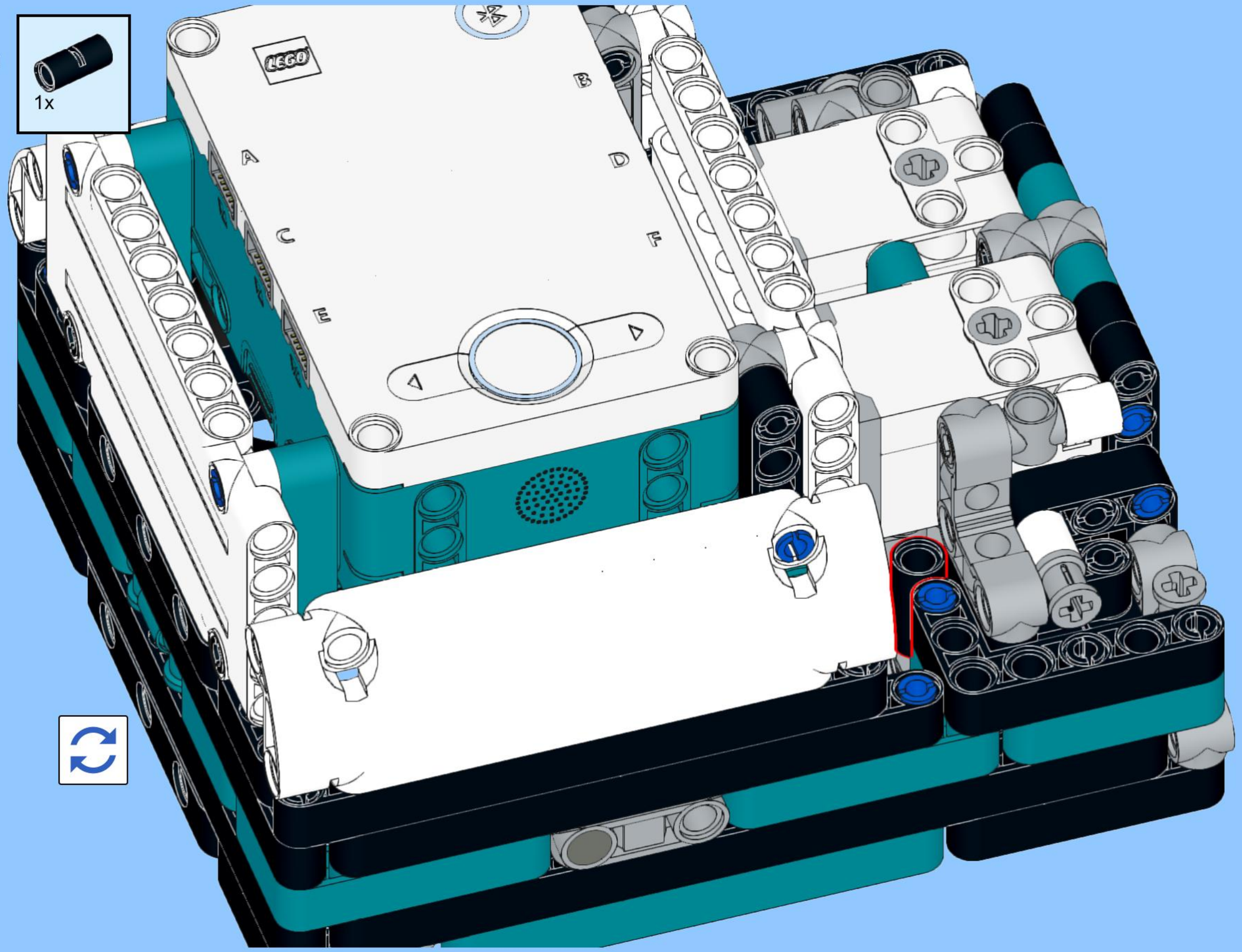

105

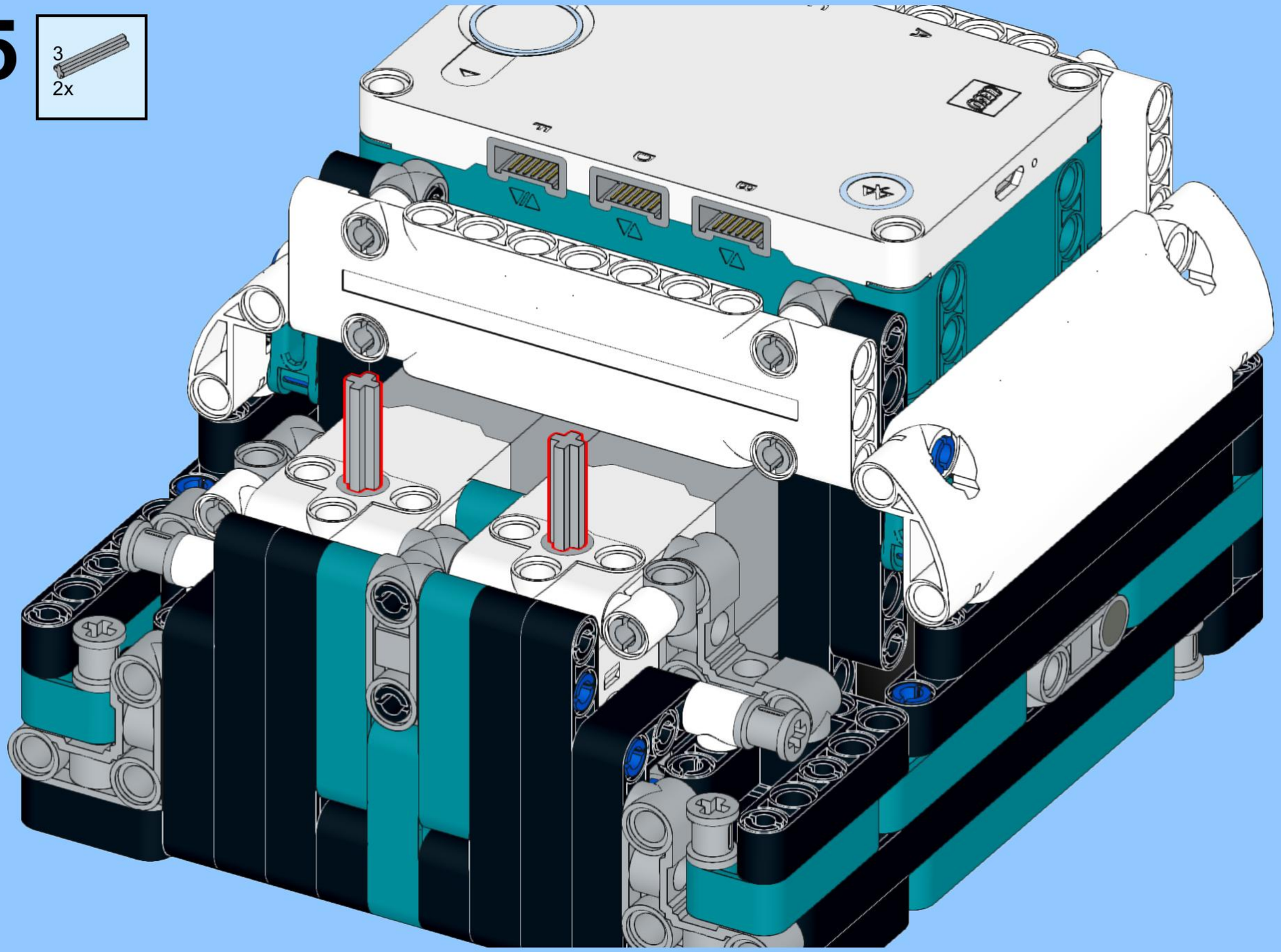

106

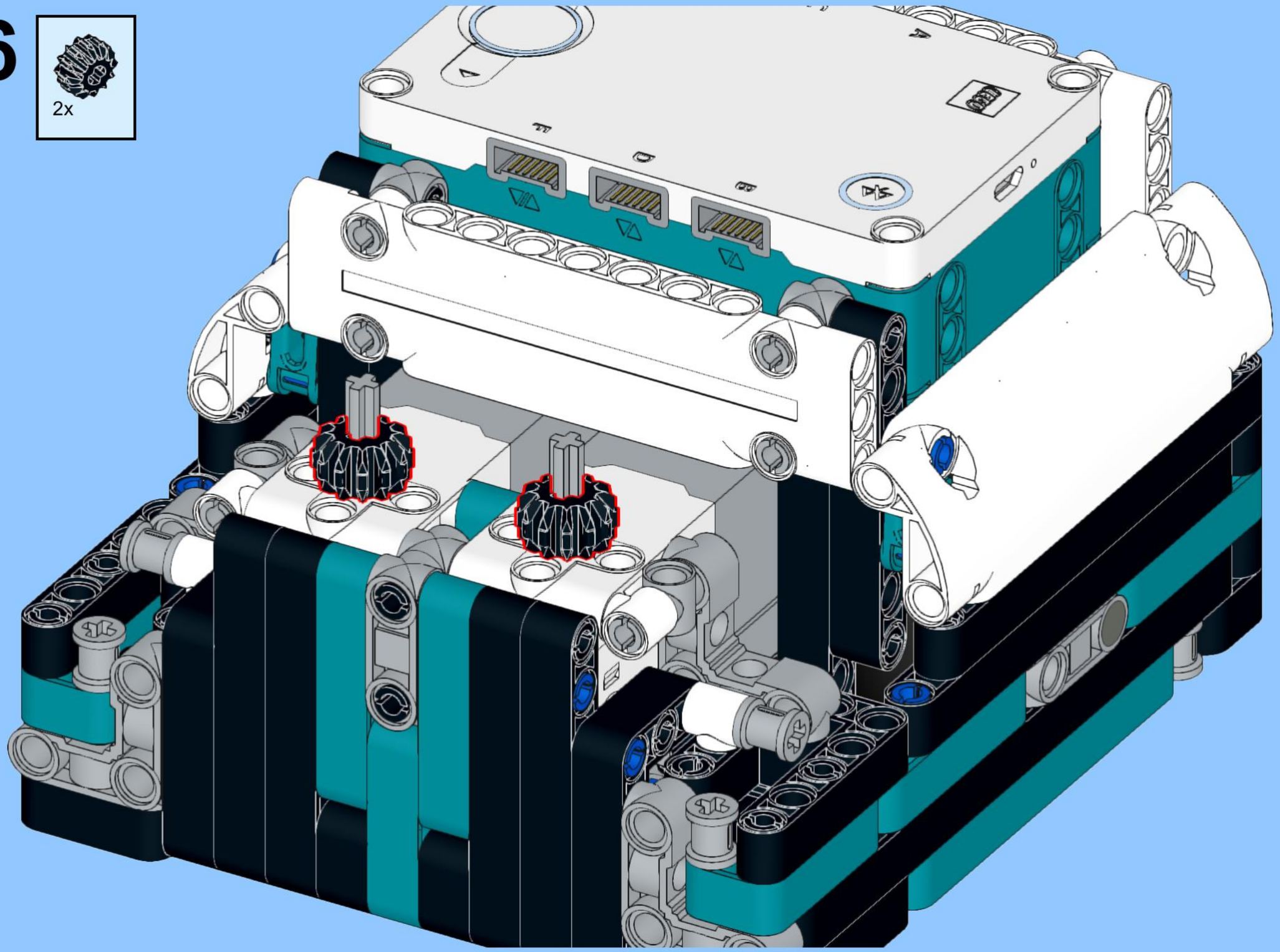

68x
2780
Black

2x
32140
Black

1x
32009
Black

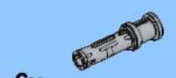
6x
32054
Light Bluish Gray

4x
15100
White

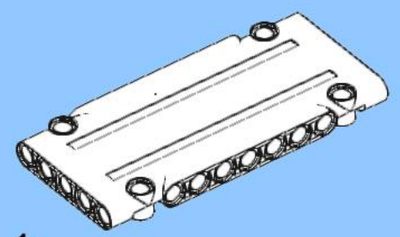
1x
64782
White

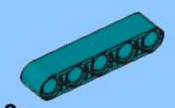
3x
32316
Dark Turquoise

10x
43093
Blue

2x
60483
Black

2x
37308c01
Black

4x
32525
Black

2x
32184
Light Bluish Gray

1x
6538c
White

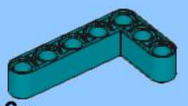
6x
32526
Dark Turquoise

58x
32556
Blue

2x
62462
Black

2x
56903
White

5x
32054
Red

2x
22961
Black

6x
32526
Black

2x
87082
Light Bluish Gray

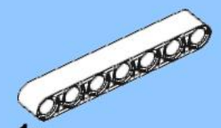
1x
32524
White

1x
24316
Reddish Brown

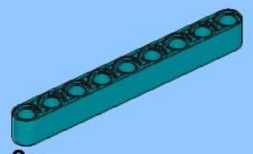
2x
40490
Dark Turquoise

2x
32270
Black

8x
32524
Black

4x
32278
Black

9x
48989
Light Bluish Gray

2x
49283
Dark Turquoise

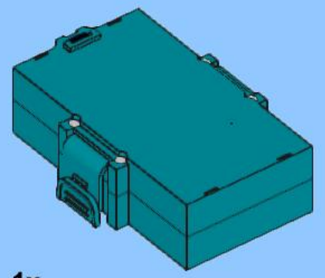
1x
55422c01
Dark Turquoise

4x
32523
Black

3x
64179
Black

2x
11214
Dark Bluish Gray

4x
55615
Light Bluish Gray

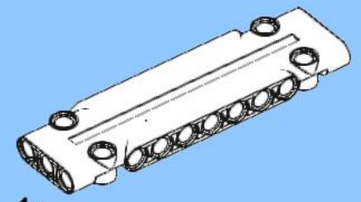
1x
15458
White

4x
42003
Dark Turquoise

2x
32557
Black

3x
87083
Dark Bluish Gray

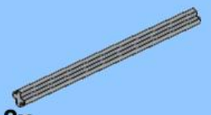
2x
44294
Light Bluish Gray

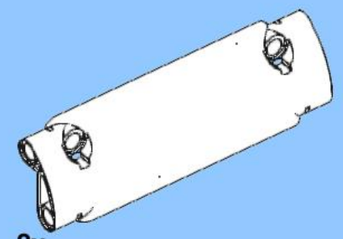
2x
62531
White

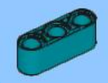
3x
32523
Dark Turquoise

2x
60484
Black

2x
39367pb02
Black

3x
3713
Light Bluish Gray

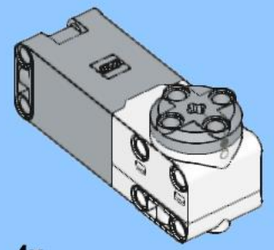
4x
54696c01
Light Bluish Gray

4x
4519
Light Bluish Gray

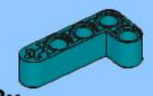
3x
32140
Dark Turquoise

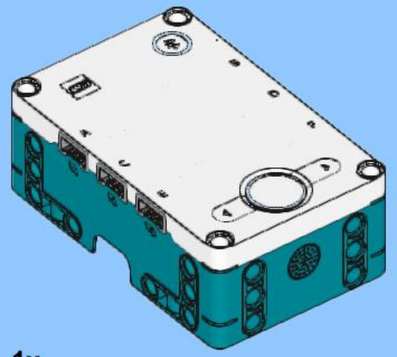
1x
bb1142c01
Dark Turquoise