Project Report

(Internship Semester January–June)

Design of Front end converter using SVPWM technique

Submitted by

Shashank Agarwal
21104027

Under the Guidance of

Mr. Sarv Parteek Singh
Technical Advisor
Statcon Electronics India Ltd,
Noida

Dr. Loveleen Kaur Taneja
Faculty Coordinator
Department of Electical Engineering
Punjab Engineering College (Deemed to be University),
Chandigarh

Declaration

I hereby declare that the project work entitled ”Design of Active Front End” is an authentic record of my own work carried out at Statcon Electronics India Ltd as requirements of six months project semester for the award of degree of B.E./B.Tech. Electrical Engineering, Punjab Engineering College (Deemed to be University), Chandigarh, under the guidance of Mr. Sarv Parteek Singh and Dr. Loveleen Kaur Taneja, during January to June, 2024.

Date: June 17, 2024

Shashank Agarwal
21104027

Certified that the above statement made by the student is correct to the best of our knowledge and belief.

Dr. Loveleen Kaur Taneja
Faculty Coordinator
Department of Electical Engineering
Punjab Engineering College (Deemed to be University),
Chandigarh

Mr. Sarv Parteek Singh
Technical Advisor
Statcon Electronics India Ltd,
Noida

Acknowledgement

I am immensely thankful for the unwavering support and guidance provided by Mr. Sarv Parteek Singh, our esteemed Technical Advisor, throughout the duration of this project.His expertise in control systems and control algorithms were invaluable in overcoming technical challenges and achieving project objectives.

I extend my heartfelt gratitude to Mr. M.S. Saini, Director of our company, for his continuous encouragement and belief in my abilities. His support has been instrumental in navigating through various aspects of the project and ensuring its successful completion.

Furthermore, I would like to express my sincere appreciation to Dr. Dora for his invaluable guidance in the development of the SVPWM Inverter and his assistance with MATLAB. His expertise and mentorship have been indispensable in overcoming technical hurdles and achieving project milestones.

I am sincerely thankful to each of them for their contributions, which have played a significant role in the successful completion of this project.

Shashank Agarwal
21104027

Contents

1 Summary **1**
1.1 Timeline 1
1.1.1 January 1
1.1.2 Feburary 1
1.1.3 March 2
1.1.4 April 2
1.1.5 May 2
1.1.6 June 2

2 Introduction **3**
2.1 Problem Statement 3
2.2 Overview 3
2.2.1 Traditional Rectifier 4
2.2.2 IGBT Rectifier 4
2.2.3 Vector Control 5
2.2.4 Space Vector Modulation 5
2.3 Challenges 5

3 Work **6**
3.1 Simulation 6
3.1.1 MATLAB Function Blocks in Simulation 6
3.1.2 Control System 7
3.1.3 Power System 8
3.2 Implementation 9

4 Industry **10**

5 Review **11**
5.1 Company review 11
5.2 Project review 11

6 Details of work **12**

7 Conclusion and Future scope **13**

8 References **14**

List of Figures

2.1 AC to DC Conversion using Diode Rectifier. 4
2.2 Schematic diagram of a front-end converter (FEC) 4

3.1 Simulation 6
3.2 Control System 7
3.3 Power System 8

1. Summary

I got the opportunity to do my internship at Statcon Electronics India Ltd. Statcon Electronics established in 1986 is one of India's largest ISO 9001-20151 certified manufacturer of Static energy Conversion system. During my internship at Satcon Electronics India Ltd, Noida, I was first assigned to explore Space Vector Modulation technique and then make a simulation for a front end converter using Space Vector Modulation. I was part of the Embedded Software team and my task was to develop a control algorith for the front end converter.

The aim of the project to design a Active Front End converter for a Hybrid inverter,aiming to enhance its efficiency and performance while reducing harmonic distortions and improving the power factor.

1.1 Timeline

My internship at Statcon Electronics India Ltd started on 10th January, 2024. My mentor gave me the task of exploring Space Vector Modulation and developing control algorithm for the front end converter. This timeline will briefly explain the course of my internship from beginning to end.

1.1.1 January

In January, I started learning about Space Vector Pulse Width Modulation (SVPWM). This involved understanding two important things: the Clarke and Park transforms. These transforms help to change three-phase voltages into a simpler two-dimensional form, making it easier to control three-phase systems. The Clarke transform turns three-phase voltages into two-phase parts, while the Park transform changes these parts into a fixed frame of reference. I also learned about space vectors, which show how the three-phase voltages combine. This knowledge helped me understand SVPWM better. It's a technique that uses space vectors to control how inverters produce voltage. This exploration gave me a better grasp of how SVPWM works and its uses in power electronics.

1.1.2 Feburary

During February, I immersed myself in the study of the Clarke and Park transforms, essential mathematical tools used in analyzing three-phase electrical systems.The Clarke transform simplifies three-phase voltages into two-phase components, making it easier to understand and analyze complex electrical systems. Similarly, the Park transform further refines these components into a fixed frame of reference, streamlining the analysis and control of electrical signals. Alongside theoretical exploration, I practically experimented

by developing Python code to implement and test these transformations. This hands-on approach not only deepened my understanding of the transforms but also provided valuable insights into their real-world applications and implementation challenges.

1.1.3 March

During March, I worked on developing and testing a three-phase Phase-Locked Loop (PLL) algorithm using Python. This algorithm used the Clarke and Park transforms to precisely estimate the angle of the space vector in the three-phase system. Following the initial testing phase of the PLL algorithm in Python, I transitioned to Simulink/MATLAB for further simulation. Within the Simulink environment, I used MATLAB function blocks to implement the PLL algorithm. Once this was completed, I proceeded to make a three-phase inverter in Simulink using IGBT components. Leveraging MATLAB function blocks and the output of the PLL, I then generated gate timing signals for the Front end of the inverter, ensuring precise control and synchronization of the electrical signals.

1.1.4 April

In April, I worked toward fine-tuning the Proportional-Integral (PI) controller for the Phase-Locked Loop (PLL) using the Ziegler–Nichols method. This involved adjusting the parameters of the PI controller to optimize the performance of the PLL algorithm. By employing the Ziegler–Nichols method, I aimed to achieve stability and responsiveness in tracking and synchronizing the phase of electrical signals effectively. Additionally, I implemented a control loop in MATLAB function blocks to measure the current flowing from the front end to the grid. This control loop allowed for the adjustment of the output voltage to either draw or supply the desired current, depending on the system requirements.

1.1.5 May

In May, I completed the simulation and proceeded with the actual implementation of the front end on hardware. I began by selecting a suitable microcontroller with DSP capability, opting for the STM32F411 microcontroller. Then, I initiated the coding process, developing functions for voltage transformations, PID controller, and Phase Lock Loop (PLL). Additionally, I integrated unit testing using Unity to test individual functions of the code. Moreover, I created a native target to provide sample signals to the code, generating output graphs for viewing. This approach allowed me to test my code without the need for a microcontroller.

1.1.6 June

In June, I moved from the Noida office to the Hyderabad office, where I continued the development of both the code and hardware. While there, I familiarized myself with the standard structure of code that needed to be followed and proceeded with the ongoing development process.

2. Introduction

An active front-end (AFE) converter, is a grid interface converter that transfers power between an energy source and the utility grid, and between the utility grid and a load. It's a controllable rectifier that can exchange power between AC and DC power in both directions, and can regenerate power to the mains to reduce power costs.

2.1 Problem Statement

My team at Statcon Electronics India Ltd has been focusing on on enhancing the efficiency and performance of front-end converters. Presently, most active front-end converters utilize Silicon Controlled Rectifiers (SCRs) for rectification, employing a conventional 6-pulse converter configuration. My task was to explore and design a active front-end using Insulated Gate Bipolar Transistors (IGBTs) as alternatives to SCRs in the rectification process.

The primary objective of this project is to investigate the feasibility and advantages of using IGBTs instead of SCRs for rectification in active front-end converters. Specifically, we aim to implement a Space Vector Pulse Width Modulation (SVPWM) technique to control the IGBTs effectively. This technique offers precise control over the switching patterns of the IGBTs, allowing for optimized power conversion and reduced harmonic distortion.

Furthermore, the project involves the development of a sophisticated control algorithm to manage the operation of the IGBTs. This algorithm must facilitate seamless transition between pulling current from the grid (rectification mode) and supplying current to the grid (regeneration mode). The control system should ensure stable and efficient operation under varying load conditions while maintaining compliance with grid standards and regulations.

2.2 Overview

A three-phase AC to DC converter is essential for many power electronics system such as Variable frequency drive (VFD), battery charger, uninterruptible power supplies (UPS).

Traditionally diode rectifiers or thyristor rectifier are used for AC to DC conversion, both these rectifiers behave as non- linear loads. The currents drawn by the rectifiers include a fundamental component and harmonic components. The voltage drop across the line inductance due to the harmonic currents distorts the mains voltage. Consequently, the other loads connected to the mains are also fed with a distorted voltage.

2.2.1 Traditional Rectifier

Diode rectifier, depicted in Figure 2.1, produces a constant DC voltage, which is a function of the system voltage. A thyristor based rectifier can produce a variable DC voltage. But, both these topology behave as non-linear loads.

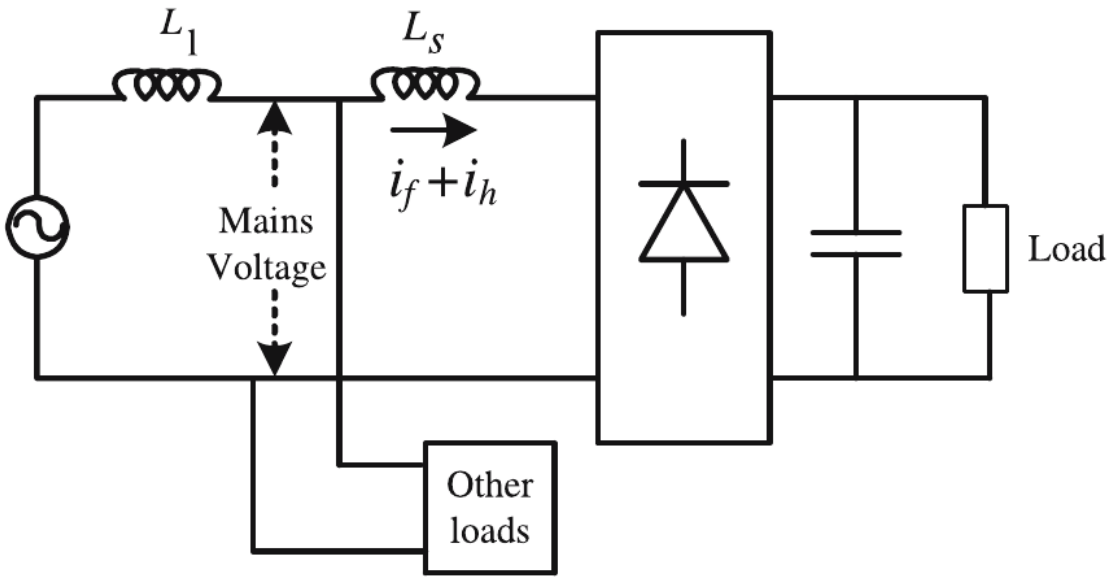

Figure 2.1: AC to DC Conversion using Diode Rectifier.

2.2.2 IGBT Rectifier

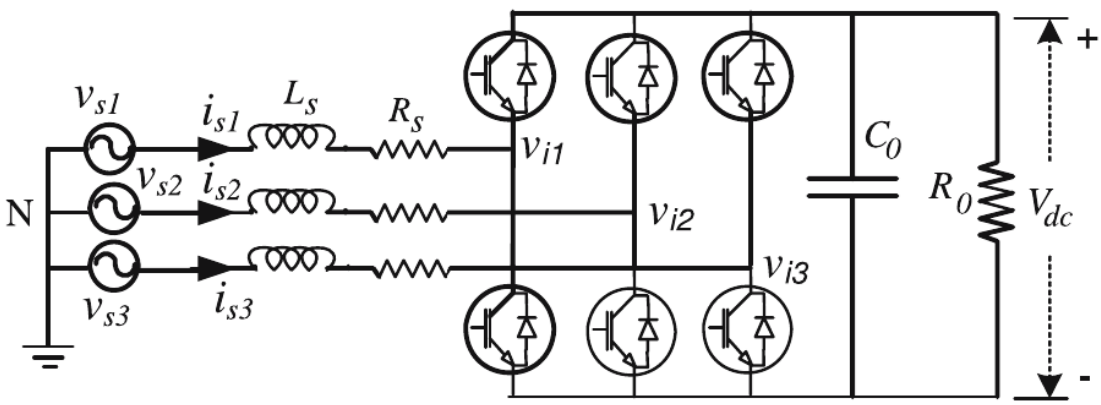

Figure 2.2: Schematic diagram of a front-end converter (FEC)

IGBT Rectifer, depicted in Figure 2.2, draws near sinusoidal current from grid. The power factor as well as DC Voltage can be adjusted. Since it is connected to line side it is called line side or front end converter.

The converter consists of a three-phase bridge, a high capacitance on the dc side and a three-phase inductor in the line-side. The voltage at the mid point, V_i is pulse width modulated (PWM) in nature. The voltage consists of a fundamental component (at line frequency) besides harmonic components around the switching frequency of the converter. Being at high frequencies, these harmonic components are well filtered by the line inductor. Hence the current is near sinusoidal. The fundamental component of V_i controls the flow of real and reactive power.

2.2.3 Vector Control

Vector control is a popular method for control of three-phase induction motors. The basic idea of this scheme is to control the flux producing and the torque-producing components of motor current. The outer control loop controls the speed of the motor, while the inner loop controls the components of current vector, which correspond to torque and flux. Similar control approach can be used for FEC also. Here, the three-phase grid voltages and line currents are converted into an equivalent two-phase system, called stationary reference frame . These quantities are further transformed into a reference frame called synchronous reference frame, which revolves at the grid frequency .

2.2.4 Space Vector Modulation

This technique, also known as Space Vector Pulse Width Modulation (SVPWM), is a method used to generate the switching signals for the IGBTs in the AFE converter. It offers precise control over the IGBT switching patterns by synthesizing the desired output voltage as a combination of multiple voltage vectors. SVM has eight space vectors, other space vectors are synthesized by alternating active and zero vectors over a switching period.

2.3 Challenges

I faced many challenges in developing a Active front-end converter. Firstly, distinguishing between Sinusoidal Pulse Width Modulation (SPWM) and Space Vector Pulse Width Modulation (SVPWM) posed confusion due to their perceived similarity in operational principles. Secondly, reconciling the non-zero resultant vector in SVPWM with the traditional understanding of three-phase systems, where the vector sum equals zero, required conceptual clarification to ensure accurate system design and analysis. Another challenge was comprehending how rectification and regeneration can occur through the same IGBT bridge, as it involved bidirectional power flow management. Additionally, not knowing how to write code in MATLAB was another challenge, but learning it opened up new possibilities for simulating and analyzing our AFE converter designs.

3. Work

3.1 Simulation

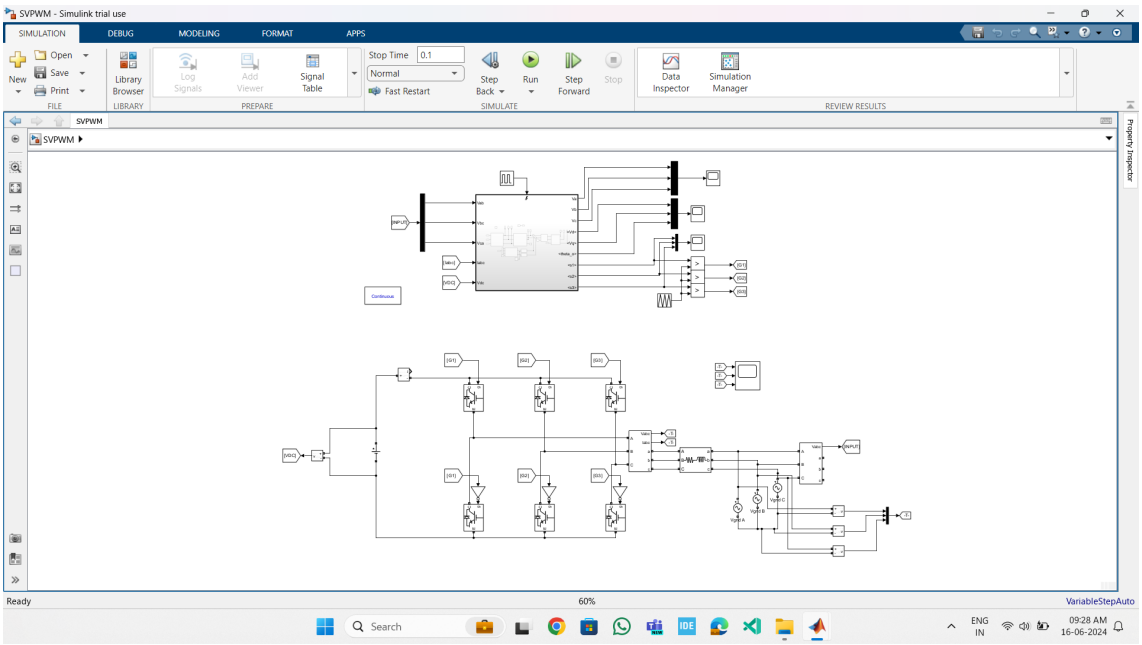

Figure 3.1: Simulation

Before initiating the implementation phase, it was imperative to conduct a comprehensive simulation of the front end using Simulink/MATLAB. The simulation setup involved importing a three-phase source from MATLAB and configuring the necessary parameters for voltage and current measurements.

3.1.1 MATLAB Function Blocks in Simulation

To emulate the behavior of a microcontroller in the simulation environment, MATLAB function blocks were extensively utilized. These function blocks provided a familiar coding environment, resembling the programming paradigms employed in microcontroller firmware development. By encapsulating custom algorithms and control logic within MATLAB function blocks, it was possible to simulate complex control strategies and signal processing techniques with ease. This approach not only facilitated rapid prototyping and testing but also provided invaluable insights into the real-time behavior of the system. The use of MATLAB function blocks bridged the gap between simulation and implementation, enabling seamless transition from design validation to hardware deployment.

3.1.2 Control System

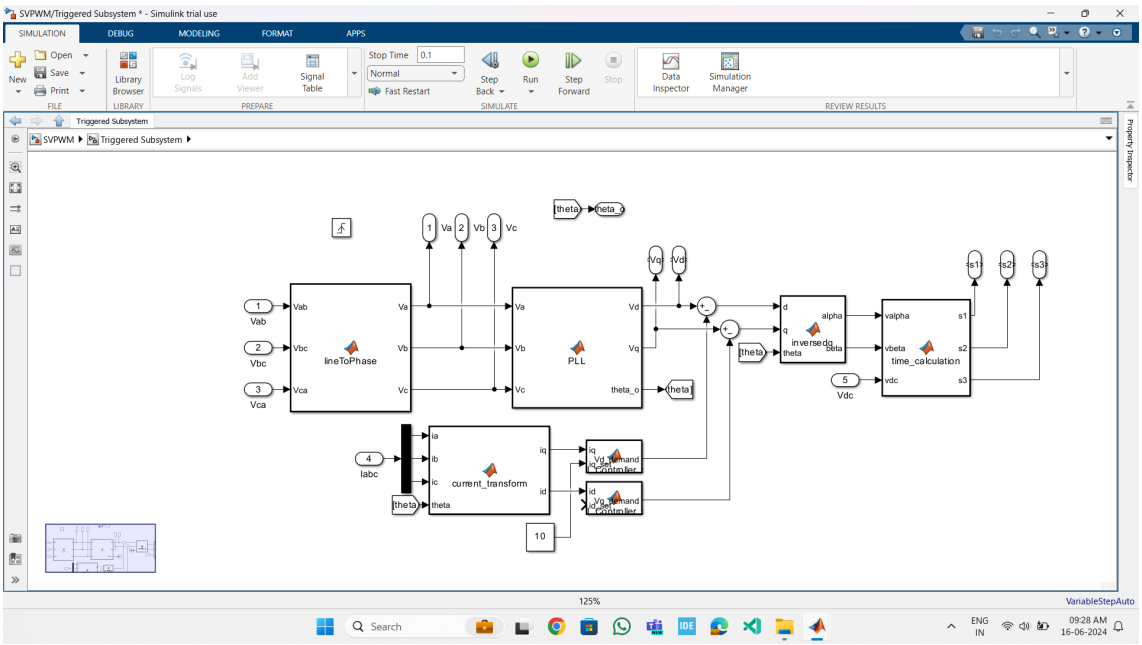

Figure 3.2: Control System

Voltage Transformation

Transform the measured line voltages from the three-phase source into the alpha-beta frame using the Clarke transform. This transformation facilitates easier analysis and control of the three-phase system. The Clarke transform converts three-phase voltages into two orthogonal components (alpha and beta), simplifying the analysis of the system's dynamics and making it easier to implement control strategies.

Phase-Locked Loop (PLL)

Incorporate a Phase-Locked Loop (PLL) block to convert the voltages from the alpha-beta frame to the dq rotating reference frame. Additionally, the PLL provides the angle theta of the voltage vector, crucial for subsequent control strategies. The PLL ensures synchronization with the grid by maintaining a constant phase relationship, which is vital for accurate control and stability of the system.

Current Measurement and Transformation

Measure the line current flowing into the front end, and using Clarke and Park transform blocks, convert it to the dq reference frame. Utilize the angle theta obtained from the PLL for this transformation. The dq reference frame allows for decoupled control of the direct and quadrature components of the current, enabling more precise control of the active and reactive power.

Current Regulation

Regulate the current flowing into the front end to ensure stable operation and adherence to system constraints. Employ two Proportional-Integral (PI) controllers to compare the measured current to a predetermined set current value and generate control signals for current regulation. The PI controllers adjust the control signals to minimize the error between the measured and desired current values, ensuring the system operates within the desired parameters.

Voltage Calculation and Transformation

Add the control signals (delta Vq and delta Vd) obtained from the PI controllers to the Vq and Vd components obtained from the PLL. Convert these voltages back to the Clarke frame using the inverse Park transform. This step integrates the control efforts with the system's voltages, transforming the controlled voltages back into the stationary reference frame for further processing and application.

Gate Timing Calculation

Utilize the voltages calculated in the previous step (V alpha* and V beta*) to determine gate timings for the three-phase active front end. These gate timings dictate the switching patterns of the Insulated Gate Bipolar Transistors (IGBTs), essential for controlling the flow of current through the front end. The precise timing of the IGBT switching is crucial for maintaining the desired current and voltage waveforms, ensuring efficient and stable operation of the power conversion system.

3.1.3 Power System

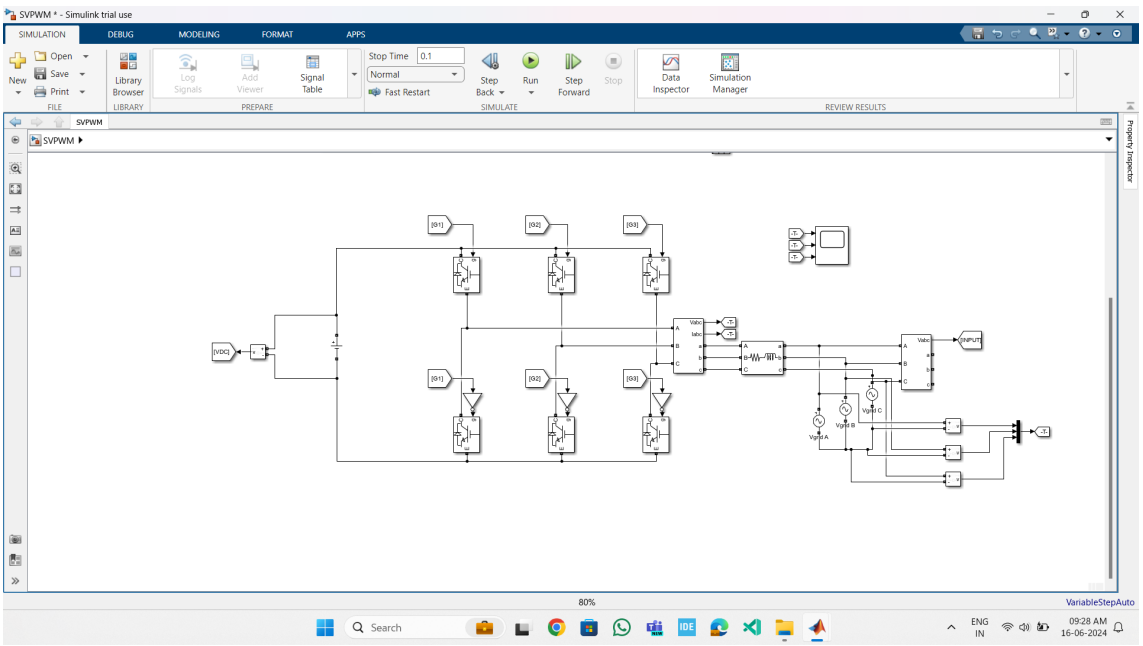

Figure 3.3: Power System

Three-Phase AC Source

The Three-Phase AC Source serves as the input power to the system.It provides three sinusoidal voltage waveforms with a 120-degree phase difference between each phase.The amplitude and frequency of the AC source are determined based on the grid specifications or the application requirements.

Three-Phase IGBT Bridge

The Three-Phase IGBT Bridge is the primary power conversion and control element in the system. It consists of six Insulated Gate Bipolar Transistors (IGBTs) arranged in a three-phase bridge configuration. The IGBTs are switched in a complementary manner to modulate the voltage across the load.

The IGBT bridge controls the flow of current from the AC source to the load by switching the IGBTs on and off at precise intervals. This switching action enables the conversion of AC power from the source to DC power, which can be further conditioned or inverted as per the requirements of the application.

Additionally, the gate timing signals for the IGBTs are generated based on the control signals calculated by the control system. These gate timing signals dictate the switching pattern of the IGBTs, ensuring the desired current and voltage waveforms are maintained for efficient and stable operation of the power conversion system.

3.2 Implementation

4. Industry

5. Review

5.1 Company review

5.2 Project review

6. Details of work

7. Conclusion and Future scope

8. References