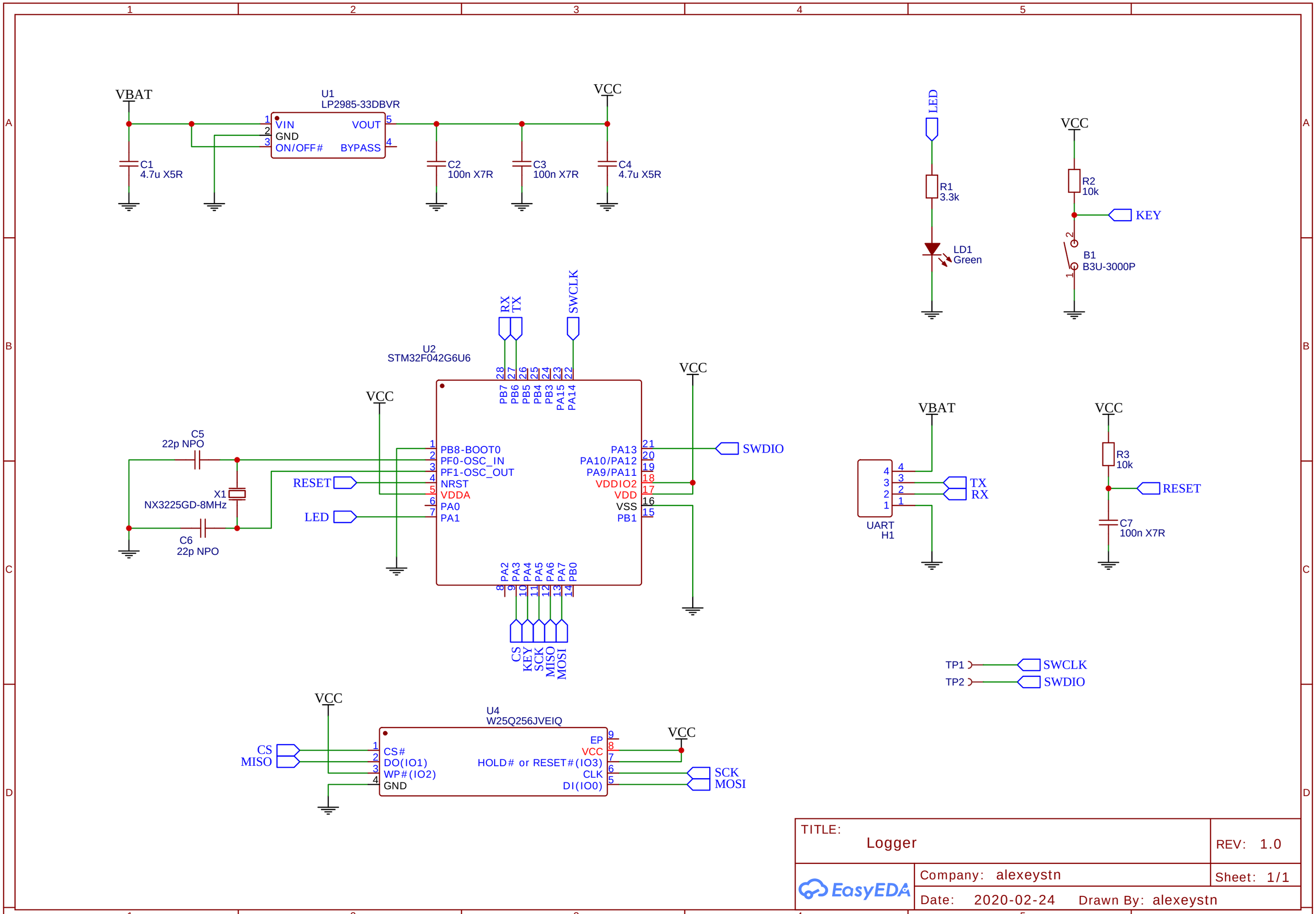

TITLE: Logger	REV: 1.0
Company: alexeystn	Sheet: 1/1
Date: 2020-02-24 Drawn By: alexeystn	