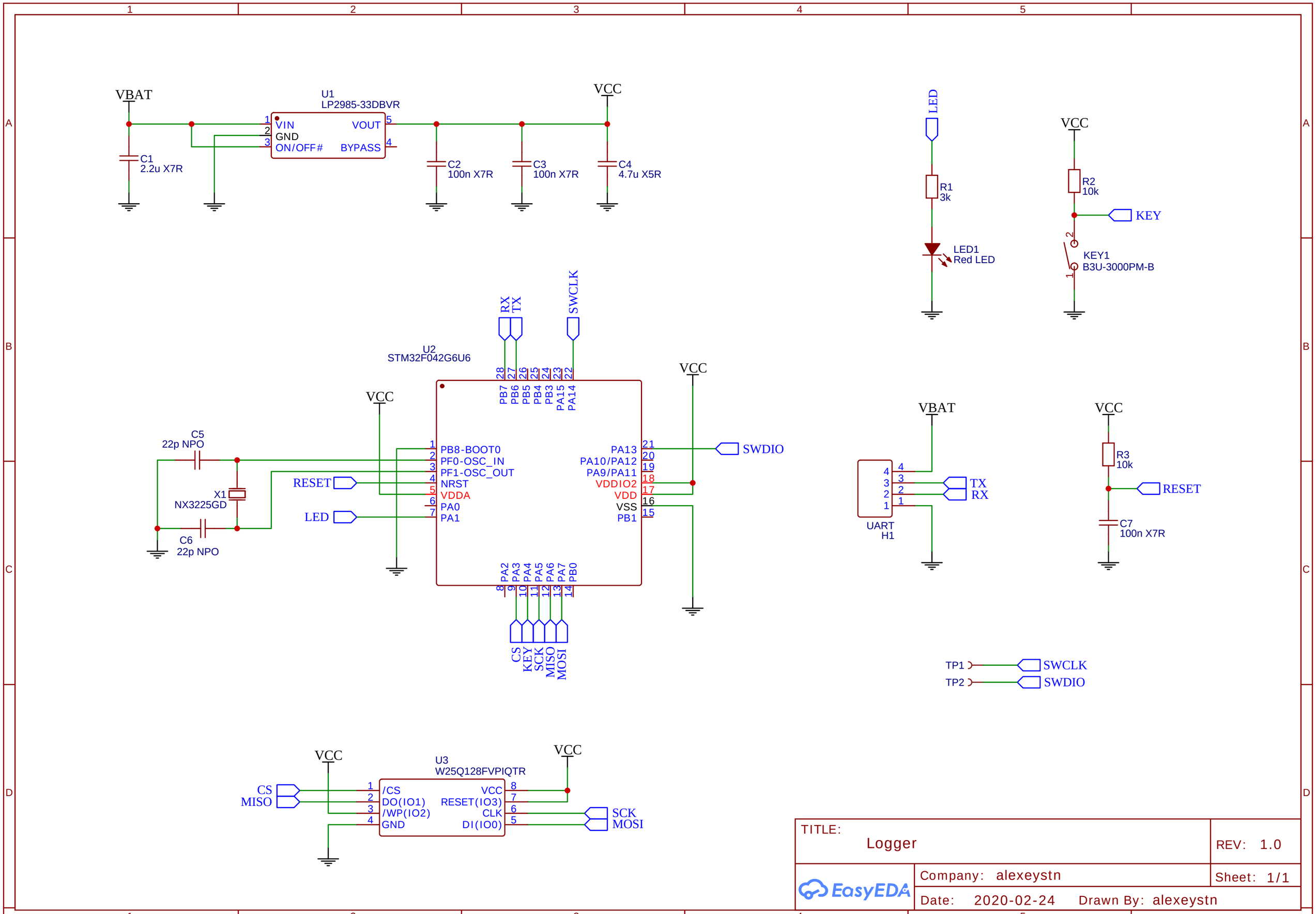

TITLE: Logger	REV: 1.0
EasyEDA	Company: alexeystn / Sheet: 1/1
	Date: 2020-02-24 Drawn By: alexeystn