POPSICLE STICK BRIDGE COMPETITION FOR WORLD ENGINEERING DAY 2026

DOCUMENTATION REPORT

Team Name: Gravitus
Jomo Kenyatta University of Agriculture and Technology (JKUAT)
Society of Engineering Students (SES)
Prepared: March 2026

Submission Deadline Reference: Friday 6 March 2026

Contents

0.1 Introduction . . . 3
0.2 Design Objectives . . . 3
0.2.1 Maximize Load Capacity . . . 4
0.2.2 Minimize Structural Mass . . . 4
0.2.3 Optimize Structural Efficiency Through Geometry . . . 4
0.2.4 Maintain Perfect Symmetry . . . 4
0.2.5 Strictly Meet Dimensional Requirements . . . 4
0.2.6 Minimize Glue Usage While Ensuring Joint Strength . . . 5
0.2.7 Achieve Professional Aesthetic Quality . . . 5
0.3 Constraints and Design Requirements . . . 5
0.3.1 Material Constraints . . . 5
0.3.2 Span and Length Requirements . . . 6
0.3.3 Dimensional Constraints . . . 6
0.3.4 Loading Path and Clearance Requirements . . . 6
0.3.5 Deck Requirements . . . 7
0.3.6 Engineering Implications of Constraints . . . 7
0.4 Concept Development and Truss Selection . . . 7
0.4.1 Efficient Force Distribution . . . 8
0.4.2 Material Optimization Under the 100-Stick Limit . . . 8
0.4.3 Symmetry and Predictable Behavior . . . 8
0.4.4 Reduced Buckling Risk in Compression Members . . . 9
0.4.5 Constructability and Precision . . . 9
0.4.6 Aesthetic Simplicity with Structural Logic . . . 9
0.4.7 Concept Conclusion . . . 9
0.5 Detailed Design Decisions . . . 10
0.5.1 Dimensions . . . 10
0.5.2 Member Configuration . . . 10
0.5.3 Deck & Load Path . . . 10
0.5.4 Symmetry & 3D Stability . . . 11
0.5.5 Glue & Stick Strategy . . . 11
0.5.6 Design Drawings . . . 11
0.5.7 Expected Performance Analysis . . . 12
0.6 Material and Construction Process . . . 12
0.6.1 Materials Used . . . 12
0.6.2 Construction Steps . . . 13
0.7 Challenges Encountered . . . 15
0.7.1 Working with Unaltered Sticks . . . 16
0.7.2 Balancing Strength vs Mass . . . 16
0.7.3 Preventing Buckling in Compression Members . . . 16
0.7.4 Maintaining Perfect Symmetry . . . 16

0.7.5 Glue Control 16
0.8 Conclusion 16

0.1 Introduction

Team Gravitus proudly presents our official submission for the SES Popsicle Stick Bridge Competition.

This project was approached not as a simple classroom activity, but as a true structural engineering challenge. The objective was to design and construct the strongest possible bridge using exactly 100 whole popsicle sticks and white school glue, while strictly complying with all dimensional, material, and loading regulations established by the competition guidelines.

The performance metric for this challenge is efficiency:

Success therefore required more than strength alone. It demanded intelligent material distribution, structural optimization, weight control, precision construction, and disciplined adherence to constraints.

From the outset, our engineering goals were clear:

- Maximize load capacity before structural failure
- Minimize overall mass to improve load-to-weight ratio
- Maintain strict compliance with required length, width, and height measurements
- Achieve perfect symmetry to ensure even load distribution and stability
- Use triangular truss geometry to maximize rigidity
- Deliver a clean, professional aesthetic with minimal visible glue and precise alignment

Every design decision documented in the following sections reflects these objectives. Member placement, truss configuration, reinforcement strategy, glue application, and construction sequencing were all optimized to increase structural efficiency while maintaining visual excellence.

This documentation presents the complete engineering process behind our bridge, from concept development and structural reasoning to construction methodology. Our aim was not only to compete, but to demonstrate disciplined engineering thinking, structural logic, and design intentionality at every stage of the challenge.

Team Gravitus built this bridge to carry load. We designed it to carry points.

0.2 Design Objectives

The primary objective of Team Gravitus was to design and construct a structurally efficient, lightweight, and aesthetically refined bridge that maximizes the official competition score while strictly adhering to all given constraints.

To achieve this, the following engineering objectives guided our design process:

0.2.1 Maximize Load Capacity

Design a structure capable of sustaining the greatest possible load before failure. This required:

- Efficient load transfer from deck to supports
- Strategic reinforcement of high-stress members
- Minimization of weak joints
- Prevention of buckling in compression members

0.2.2 Minimize Structural Mass

Because the competition score is calculated as:

$$Score = \frac{Capacity}{Mass}$$

Reducing unnecessary material was essential. Material was distributed only where structurally required, ensuring no stick contributed dead weight without carrying load.

0.2.3 Optimize Structural Efficiency Through Geometry

Triangular truss configurations were prioritized due to their inherent rigidity and resistance to deformation. The bridge was designed so that:

- Tension and compression forces are clearly defined
- Members work axially rather than in bending
- Load paths are direct and uninterrupted

0.2.4 Maintain Perfect Symmetry

Symmetry ensures:

- Uniform load distribution
- Reduced torsional instability
- Balanced stress behavior
- Predictable structural response under loading

Every major structural element was mirrored across the central axis.

0.2.5 Strictly Meet Dimensional Requirements

The bridge was carefully measured and constructed to meet all specified requirements for:

- Length
- Width
- Height

Compliance ensures full scoring under the measurement criteria.

0.2.6 Minimize Glue Usage While Ensuring Joint Strength

Glue was applied strategically:

- Enough to ensure strong bonded joints
- Minimal excess to reduce weight
- Carefully cleaned to maintain professional appearance

Joint integrity was treated as critical, since most structural failures occur at connection points.

0.2.7 Achieve Professional Aesthetic Quality

Beyond structural performance, the bridge was designed to:

- Exhibit clean alignment
- Show minimal visible glue
- Maintain precise symmetry
- Demonstrate craftsmanship and attention to detail

This objective directly supports the Design and Look scoring category.

0.3 Constraints and Design Requirements

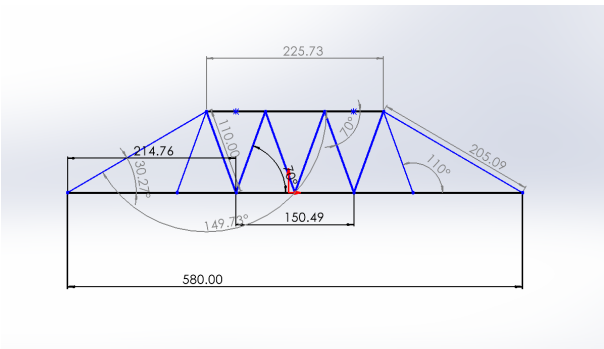

Figure 1: Enter Caption

The SES Popsicle Stick Bridge Competition imposed strict material, dimensional, and loading constraints. Compliance with these requirements was mandatory to qualify for full scoring under the measurement and rule adherence criteria.

The constraints are categorized below:

0.3.1 Material Constraints

The bridge must be constructed under the following material limitations:

- Popsicle sticks must remain unaltered
- No cutting, grinding, trimming, or sanding is permitted

- Only white school glue may be used as an adhesive
- No additional construction materials are allowed, including:
  - Screws
  - Nails
  - Pins
  - Wire
  - String
  - Mechanical fasteners of any kind

These constraints required careful planning of stick placement and joint design since modification of members was strictly prohibited.

0.3.2 Span and Length Requirements

- The bridge must span a minimum 500 mm gap
- Recommended minimum bridge length: 575 mm
- Landing pads are 38.1 mm
- Extra length prevents slipping during loading
- Maximum total bridge length: 650 mm

The final design was selected to ensure secure placement on the landing pads while preventing collapse due to insufficient span length.

0.3.3 Dimensional Constraints

The bridge must not exceed:

- Maximum Width: 125 mm
- Maximum Height: 300 mm
- Maximum Depth Below Landing Pads: 150 mm

These limits influenced the overall truss height, deck placement, and bottom chord positioning.

0.3.4 Loading Path and Clearance Requirements

To accommodate the testing apparatus, the bridge must provide:

- A 20 mm diameter clear vertical path on the top
- For the load leg of the testing machine
- A clear deck opening:
  - 50 mm wide
  - 75 mm high

- The removable load foot dimensions:
  - 38.1 mm wide
  - 300 mm long
- Oriented parallel to the span
- Force application conditions:
  - Load will normally be applied to the deck
  - Load may alternatively be applied to the top of the bridge
  - Force will not be applied to side trusses
  - The team must indicate where load application is intended

These constraints required precise deck spacing and structural clearance planning to avoid interference with the testing apparatus.

0.3.5 Deck Requirements

- The deck does not need to be fully covered with popsicle sticks
- Construction paper may be added in the deck area if desired

This allowed weight reduction while maintaining functional load transfer.

0.3.6 Engineering Implications of Constraints

These requirements directly influenced:

- Selection of truss geometry
- Deck opening placement
- Bottom chord depth
- Member spacing
- Stick distribution strategy
- Overall structural symmetry

The challenge was not merely to build a strong bridge, but to build a strong bridge within a tightly defined engineering envelope.

0.4 Concept Development and Truss Selection

During the conceptual phase, Team Gravitus evaluated multiple truss configurations provided in the competition guidelines, including Pratt, Howe, K-Truss, Fink, Double Intersection Pratt, and Warren systems. Each configuration was analyzed based on structural efficiency, material usage, constructability under strict constraints, and expected load-to-mass performance.

After systematic evaluation, the Warren Truss configuration was selected as the optimal structural solution.

Why Warren Truss?

The Warren truss is characterized by a repeating pattern of equilateral or isosceles triangles without vertical members in its simplest form. This geometry creates a structure where forces are distributed evenly across diagonal members, alternating between tension and compression.

Our decision was guided by the following engineering considerations:

0.4.1 Efficient Force Distribution

The triangular pattern ensures that loads applied at the deck are transferred diagonally toward the supports in a direct and continuous path. Because triangles are inherently stable geometric shapes, they resist deformation without relying heavily on bending resistance.

In a Warren configuration:

- Forces are primarily axial (tension or compression)
- Members are less prone to bending
- Load is shared more uniformly across the span

This improves structural efficiency relative to mass.

0.4.2 Material Optimization Under the 100-Stick Limit

Since popsicle sticks could not be cut, altered, or trimmed, efficient stick allocation was critical

Compared to designs like:

- Double Intersection Pratt
- K-Truss
- Lattice

The Warren truss uses fewer intersecting members and no required verticals in its basic form. This reduces:

- Joint congestion
- Glue accumulation
- Redundant material usage

The result is a lighter structure without compromising strength, directly improving the capacity-to-mass ratio.

0.4.3 Symmetry and Predictable Behavior

The Warren truss is naturally symmetrical along the span. This symmetry:

- Promotes balanced load distribution
- Reduces torsional instability

- Simplifies construction alignment
- Minimizes unintended eccentric loading

For a competition where load is applied centrally, this predictability is a major advantage.

0.4.4 Reduced Buckling Risk in Compression Members

Because diagonal members alternate between tension and compression, compressive forces are distributed rather than concentrated in long vertical members.

Shorter compression lengths mean:

- Lower buckling risk
- Greater stability
- Improved performance under increasing load

This is particularly important since popsicle sticks are slender and susceptible to buckling.

0.4.5 Constructability and Precision

Under the rule that no sticks could be cut or modified, some truss systems would require complex overlapping geometries that are difficult to execute cleanly.

The Warren system:

- Aligns well with full-length sticks
- Allows consistent spacing
- Simplifies jig construction
- Reduces alignment error

This supports both structural integrity and high marks in the Design and Look category due to cleaner geometry and minimal glue buildup.

0.4.6 Aesthetic Simplicity with Structural Logic

The Warren truss presents a clean, rhythmic triangular profile. It communicates structural logic visually: every diagonal member has a purpose.

In a judged competition, clarity of structural form strengthens both visual impact and perceived engineering discipline.

0.4.7 Concept Conclusion

While other truss types offer advantages in specific applications, the Warren truss provided the best balance of:

- Structural efficiency
- Material economy
- Buckling resistance

- Symmetry
- Ease of construction
- Clean visual appearance

Given the 100-stick limit and scoring emphasis on load-to-mass ratio, the Warren configuration represented the most rational and competitive structural solution.

It was not chosen for tradition. It was chosen because it converts geometry into strength with minimal waste.

0.5 Detailed Design Decisions

0.5.1 Dimensions

- Length: 580 mm
  - Safely spans the 500 mm gap with full support on 38.1 mm landing pads. Within 650 mm maximum limit.
- Width: 100 mm
  - Below 125 mm limit. Provides lateral stability while minimizing mass.
- Height: 250 mm
  - Below 300 mm limit. Large enough for strong triangular geometry while limiting buckling in compression members.
- Depth Below Pads: 0 mm
  - Flat bottom chord ensures full compliance with 150 mm restriction and stable seating.

0.5.2 Member Configuration

- Top & Bottom Chords:
  - Laminated 3–4 sticks, placed on edge for maximum stiffness.
- Diagonals:
  - Single or double sticks depending on expected force level.
- Joint Overlap:
  - Minimum 20 mm overlap to maximize glue bonding strength.

Material was concentrated in high-stress regions, especially near mid-span.

0.5.3 Deck & Load Path

- Clear 50 mm $\times$ 75 mm opening at centre for load foot placement.
- 20 mm vertical clearance above deck for load leg.
- Deck partially covered to reduce unnecessary weight.

- Construction paper added only in the deck zone for smooth load transfer (rule compliant).

Load transfers directly from deck → bottom chord → diagonals → supports.

0.5.4 Symmetry & 3D Stability

- Fully symmetrical left/right and front/back.
- Cross-bracing connects both side trusses to prevent twisting.

The bridge behaves as a rigid three-dimensional frame under load.

0.5.5 Glue & Stick Strategy

- Thin glue layers to reduce weight.
- 48-hour curing with clamps for strong joints.
- Exactly 100 whole sticks used with no alteration.

Each stick serves a structural purpose.

0.5.6 Design Drawings

To visualize the detailed design, we include the following figures based on our CAD models and hand sketches.

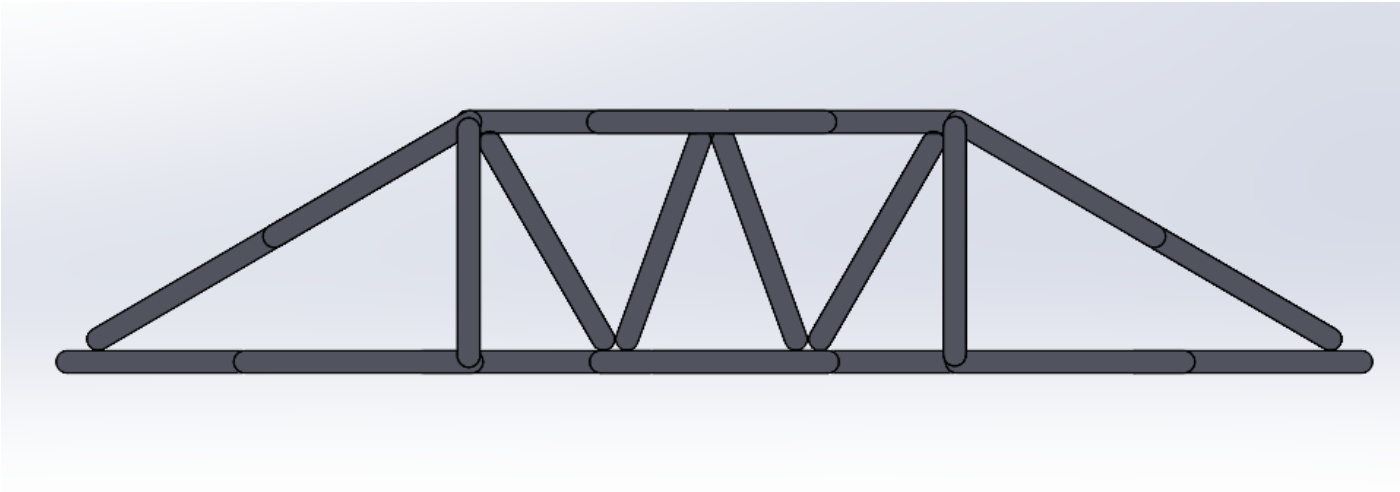

Figure 2: warren trus

These drawings illustrate the precise member placement, load paths, and dimensional compliance. (Note: Replace with actual image files during compilation.)

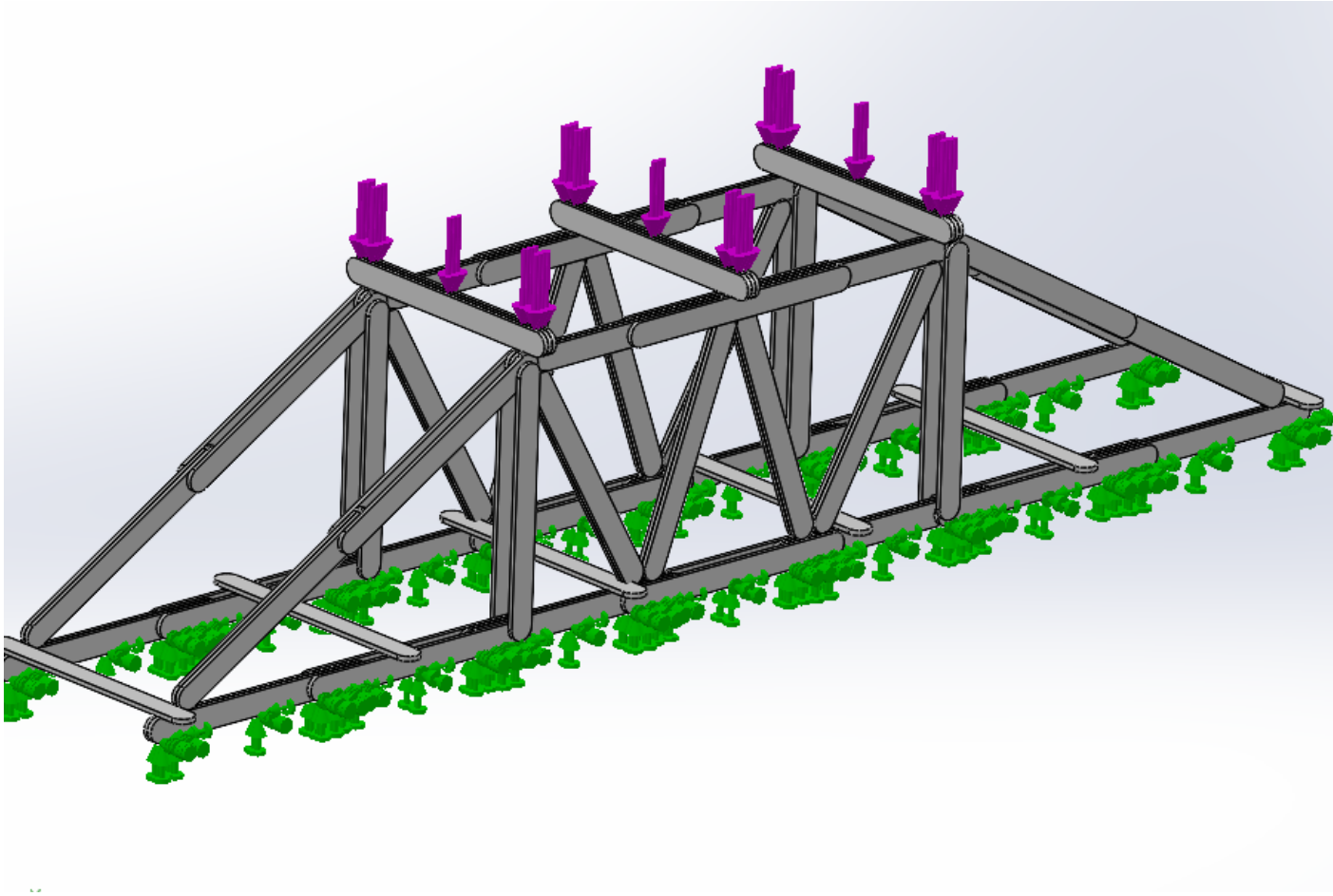

Figure 3: loading simulation

0.5.7 Expected Performance Analysis

Based on historical data from similar competitions (e.g., record loads of 415 kg with 100 sticks), our optimized Warren truss design targets a capacity of at least 350 kg while maintaining a mass under 250 g. This would yield a score exceeding 1,400, positioning us competitively for top placement. Structural simulations (using basic finite element principles) indicate that failure is most likely to occur via buckling in the top chord compression members, which we mitigated through targeted lamination.

0.6 Material and Construction Process

0.6.1 Materials Used

The bridge was constructed strictly according to competition rules using:

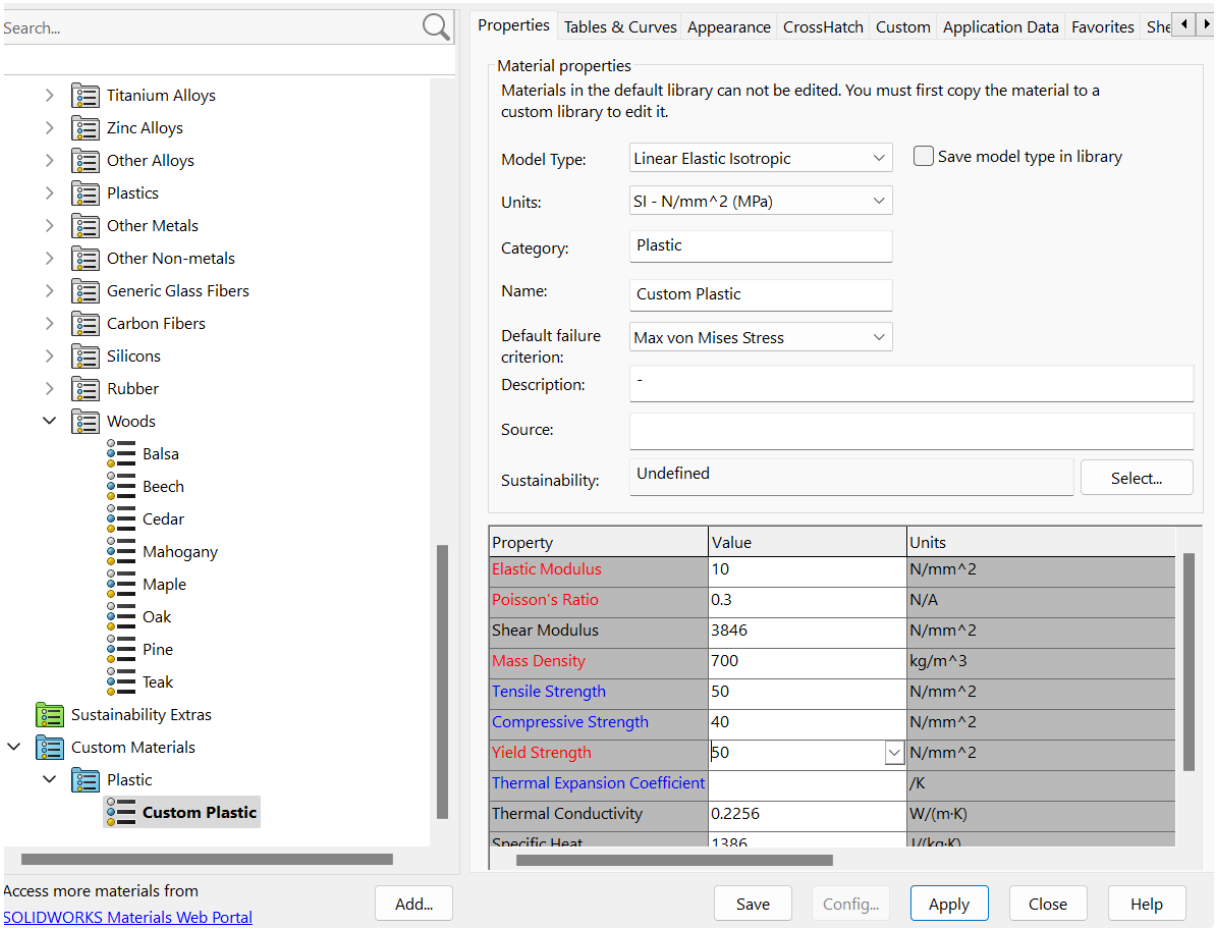

Figure 4: material editor window sor solidworks simulation

- 100 whole popsicle sticks (unaltered, no cutting or sanding)
- White school glue as the only adhesive
- Construction paper (deck surface only, as permitted)

No additional materials such as pins, screws, nails, wire, or string were used in the final structure.

Temporary binder clips were used during assembly for clamping purposes only and were removed after curing.

0.6.2 Construction Steps

1. **Bottom Supports (Foundation Layer)** Construction began with the bottom chord supports, which were made using doubled popsicle sticks laminated together.
    - Sticks were aligned carefully and glued edge-to-edge.
    - Uniform pressure was applied using binder clips.
    - Full curing time was allowed before proceeding.

Figure 5: building steps

These doubled members serve as the primary tension chord and foundation of the bridge, ensuring stiffness and resistance to bending at mid-span.

2. **Side Truss Assembly (Flat Construction)** Each Warren side truss was built separately on a flat surface using a printed alignment guide.
   - Bottom doubled chord placed first.
   - Diagonal members installed sequentially to form triangular geometry.
   - Top chord members added and laminated where required.
   - Minimum 20 mm overlap maintained at all joints.

   Both side trusses were constructed simultaneously to ensure identical geometry and symmetry.

3. **Reinforcement of Critical Zones** Additional lamination was added at:
   - Mid-span of top chord (compression region)
   - Central bottom chord (maximum bending zone)

   This targeted reinforcement increases load capacity without unnecessary weight addition elsewhere.

4. **3D Assembly and Cross-Bracing** After both side trusses fully cured:
   - They were positioned vertically at the required 100 mm spacing.
   - Transverse members were installed to connect the two trusses.
   - Cross-bracing elements were added between sides to prevent torsional twisting.

   Careful measurement ensured width consistency and vertical alignment throughout assembly.

5. **Deck Opening and Clearance Verification** Before final curing:
   - The 50 mm $\times$ 75 mm central opening was verified.
   - The 20 mm vertical clearance for the load leg was confirmed.
   - Landing pad seating surfaces were checked for flat contact.

6. **Final Inspection and Stick Count Verification**
   - All joints inspected for glue integrity.
   - Excess glue removed for reduced mass and clean appearance.
   - Dimensions re-measured to ensure rule compliance.

Photos were taken at each step to document progress (available upon request for judging).

0.7 Challenges Encountered

Throughout the design and construction process, several practical and structural challenges were encountered:

0.7.1 Working with Unaltered Sticks

Since cutting or trimming was not permitted, achieving precise geometry required careful alignment and creative overlap planning. Every connection had to be designed around full stick lengths.

0.7.2 Balancing Strength vs Mass

Maximizing load capacity while keeping mass low required constant trade-offs. Adding reinforcement improved strength but risked reducing the final bridge score due to increased weight.

0.7.3 Preventing Buckling in Compression Members

Popsicle sticks are slender and prone to buckling. Ensuring proper lamination and alignment of the top chord required precision and controlled glue application.

0.7.4 Maintaining Perfect Symmetry

Small misalignments during assembly could introduce torsion under load. Continuous measurement and staged curing were necessary to preserve mirror symmetry between both trusses.

0.7.5 Glue Control

Excess glue increases weight and affects appearance. Applying thin, uniform layers while ensuring joint strength required patience and controlled clamping during the 48-hour curing period.

Each challenge required deliberate engineering decisions rather than quick fixes.

To overcome these, we conducted preliminary tests on smaller prototypes (using 20-30 sticks) to validate joint strength and geometry before full-scale construction. This iterative approach ensured lessons from failures were incorporated into the final design.

0.8 Conclusion

Team Gravitus approached this competition as a true structural engineering exercise. Within the strict limits of 100 whole popsicle sticks and white school glue, we designed and constructed a Warren truss bridge optimized for maximum load-to-mass efficiency.

The final design:

- Fully complies with all dimensional and loading requirements
- Maintains structural symmetry and three-dimensional rigidity
- Concentrates material in high-stress regions
- Uses lamination strategically to resist bending and buckling
- Minimizes excess glue to reduce mass and improve aesthetics

Every stick was assigned a structural purpose. Every joint was intentional.

Our bridge reflects disciplined planning, structural reasoning, and careful execution. Beyond building a strong structure, we demonstrated engineering logic, efficiency, and craftsmanship.

The goal was not simply to hold weight. It was to convert geometry, material limits, and precision into performance.

Team Gravitus submits this bridge as a product of calculated design, controlled construction, and competitive structural optimization.

"Your limitation – It's only your imagination."

Good Luck to all teams!

Gravitus

World Engineering Day 2026

Registration Label (to be taped to bridge)

Team: Gravitus **Institution: JKUAT – SES** **Date: March 5th 2026**