BY	DATE	REVISIONS	ISS
PWR	02-26-14	Tooling Release	T1

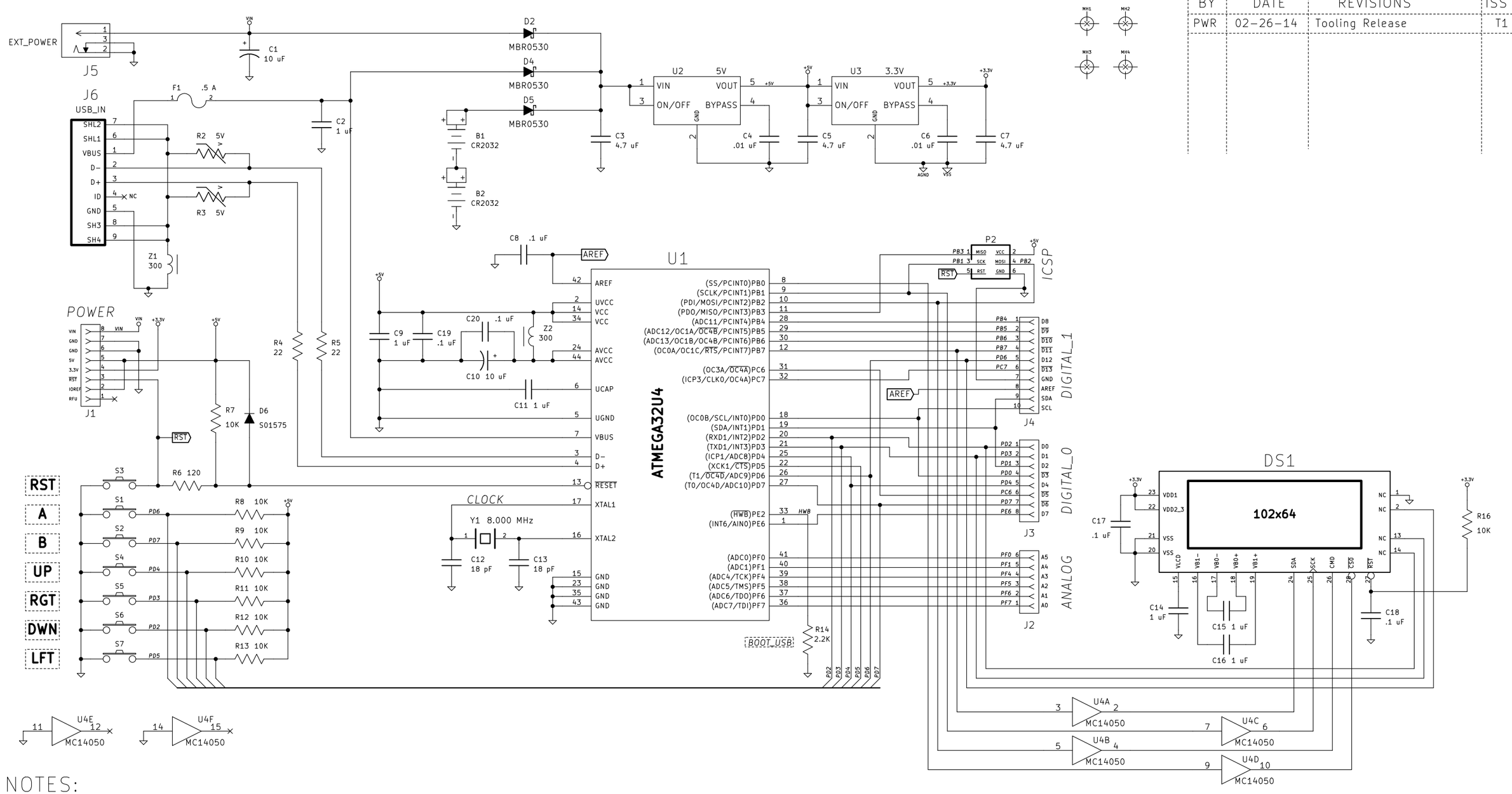

NOTES:

1. Capacitor values in pF, 5%, 25V, unless noted.
2. Resistors 0603 SMD 5% 1/10 W unless noted.

BY-SA

Copyright (c) 2013 Workshop 88
www.workshop88.com

WORKSHOP 88

LICENSE: CC-BY-SA-3.0
Proj. Mgr: R. Ristich
Drawn: P. Reich
Designed: P. Reich
Workshop 88

File: thotcon_0x5.sch
Sheet: 1/1
Title: BOARD, PC, THOTCON-0x05

Size: B	*Date: 26 feb 2014*	*Rev: T1*
KiCad E.D.A.		Id: 1/1