PRPNv1.1 Lab Topology

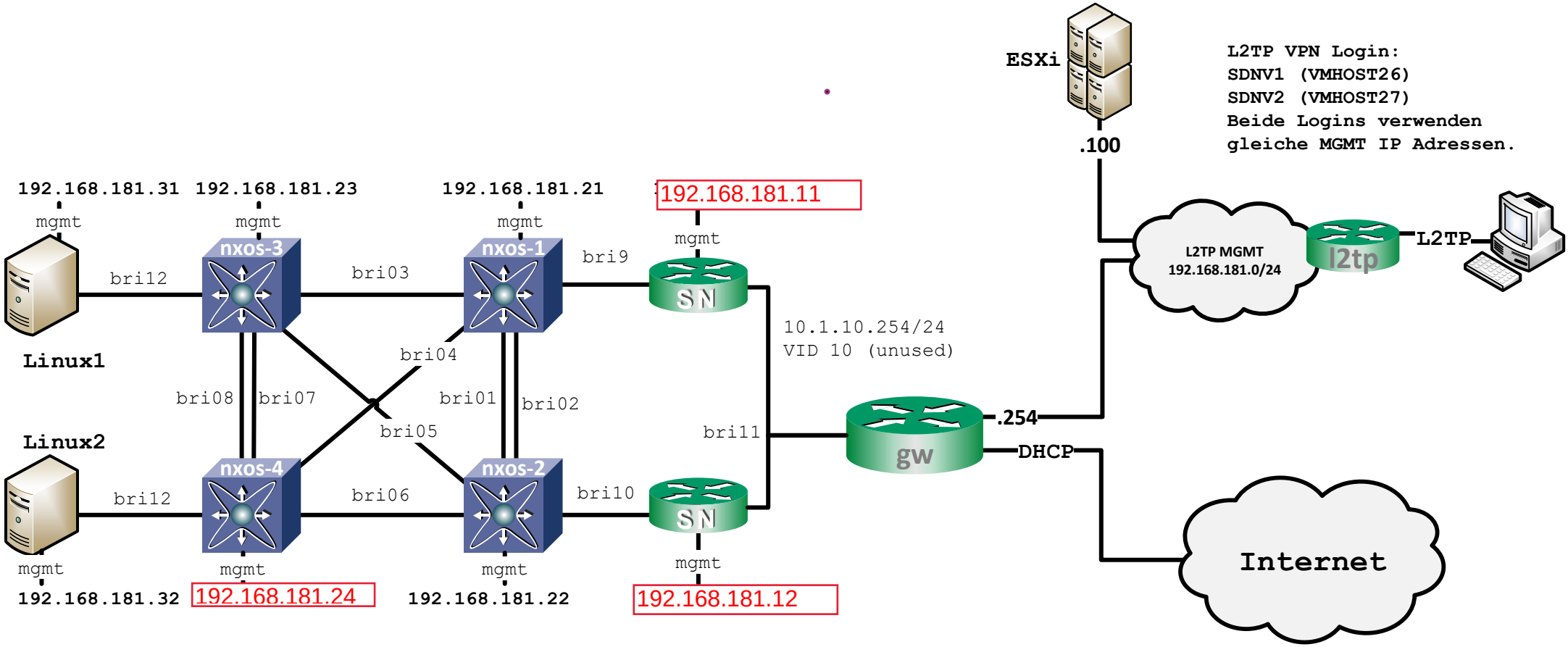

Device Login:
CSR1000v: cisco/cisco
Nexus9000v: admin/cisco
Linux: user/user