5V is provided to the module by the charger. When the module is installed in the charger, ensure that the PicKit3 is not supplying 5V power to the modle. The PicKit3 5V power can be used to operate the module when not installed in the charger.

The WDO pin should toggle the watchdog timer input (WDI) pin of the charger's reset controller chip (U2).

NOT USED

NOT USED

NOT USED

This pin turns on all system fans when set to 1 or 5V.

This is the chip select for the digital potentiometer. Don't do anything with this pin.

This is the data output pin for the digital potentiometer. Don't do anything with this pin.

This is the clock output pin for the digital potentiometer.
Don't do anything with this pin.

NOT USED

NOT USED - Pin 11 is the master reset pin used by the microcontroller on the original unit but does not provide any useful function to the new module. It also screws up the PicKit3 debugging if tied to the MCLR pin.

This pin controls the AUX2 relay.

This pin controls the AUX1 relay.

This pin controls the digital sounder. The output of this pin should be a square wave inorder for the sounder to actually make noise.

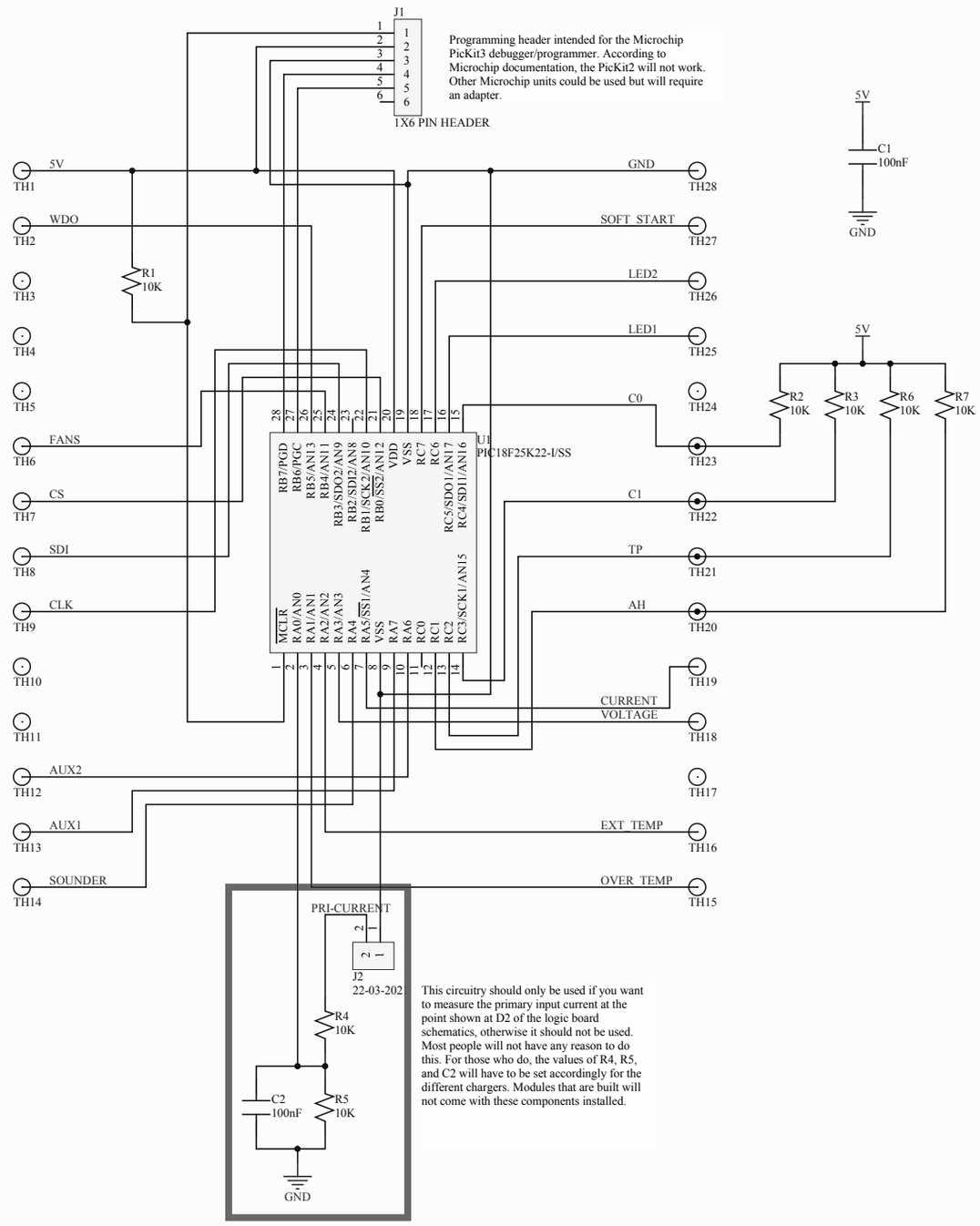

Programming header intended for the Microchip PicKit3 debugger/programmer. According to Microchip documentation, the PicKit2 will not work. Other Microchip units could be used but will require an adapter.

This circuitry should only be used if you want to measure the primary input current at the point shown at D2 of the logic board schematics, otherwise it should not be used. Most people will not have any reason to do this. For those who do, the values of R4, R5, and C2 will have to be set accordingly for the different chargers. Modules that are built will not come with these components installed.

Ground/Common - Enough said.

This is called the soft start pin but can better be thought of as the charger enable/disable pin. Setting soft_start to 0V enables charging, setting it to 5V disables charging.

LED2 is RED, LED1 is GREEN, if you want YELLOW turn them both on. The LEDs are turned on/off via open collector transistors. Setting either LED1 or LED2 to 5V turns on the transistor and actualy disables the LED output. Likewise, setting them to 0V turns them on.

These are the digital input pins that can be used for controlling the charger via external switches. Pullup resistors have been added such that all is needed is a basic toggle switch to control the input. These can be used to control the module anyway someone might want, will just require some very basic programming.

Pin 19 has a 0-5V voltage that is sampled by the chip's A/D and is proportional the battery charging output current. The voltage that is detected here is a function of the current shunt used, the analog (I) potentiometer setting, and the actual current.

Pin 18 has a 0-5V voltage that is sampled by the chip's A/D and is a variable fraction of the pack voltage. The actual voltage detected here is a complex function of the actual battery voltage, the settings of the analog (U) potentiometer, the bias settings of the digital pot reference, and the difference amplifier U12B.

NOT USED

This pin detects a voltage related to an external temperature sensor. This as not yet been implemented in code.

This pin detects a voltage related to the temperature of the controller. This has also not yet been implemented.

Title	*NG Controller Module*		Custom Circuit Solutions
Size: Tabloid	Engineer: D. Mellick	Revision: 1.1	
Date: 1/25/2012	Time: 6:58:52 PM	Sheet 1 of 1	
File: NG3.SchDoc			