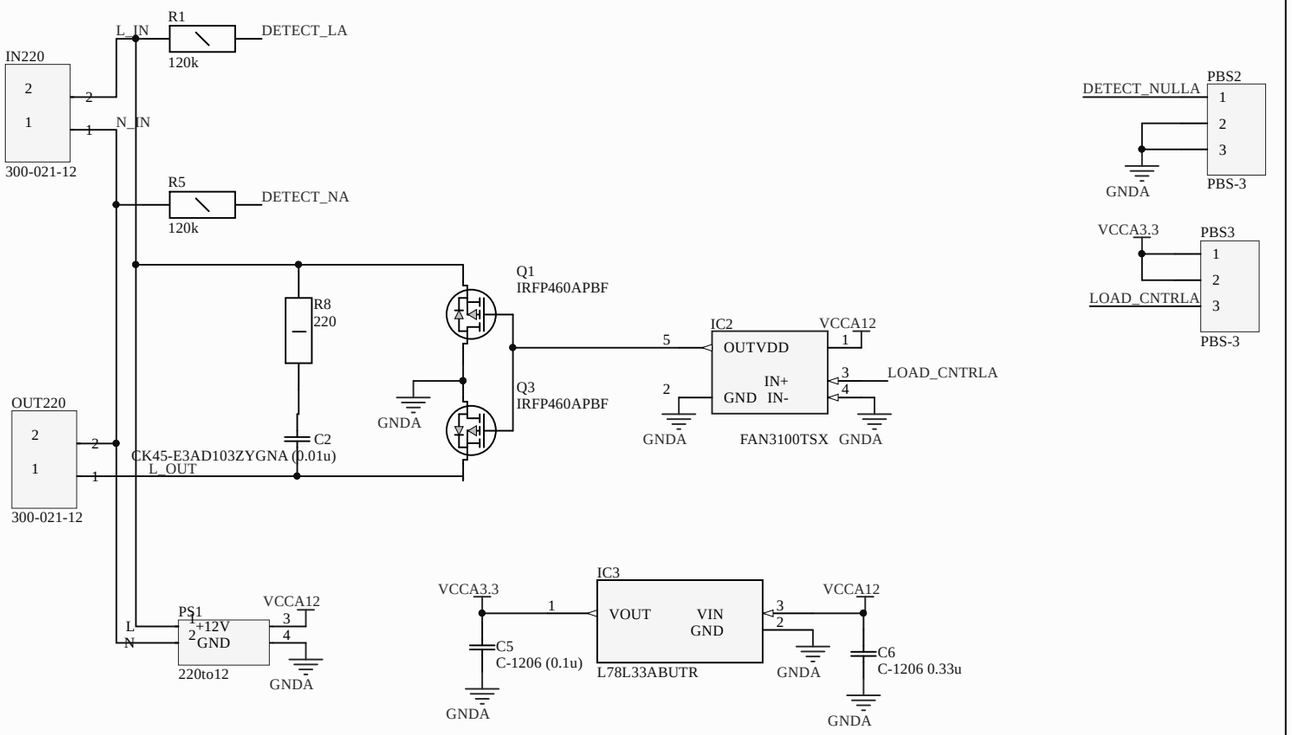

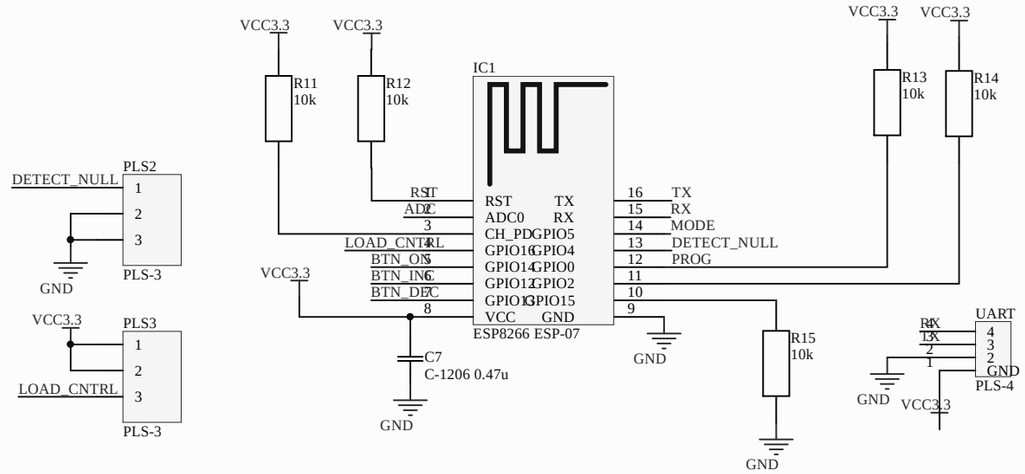

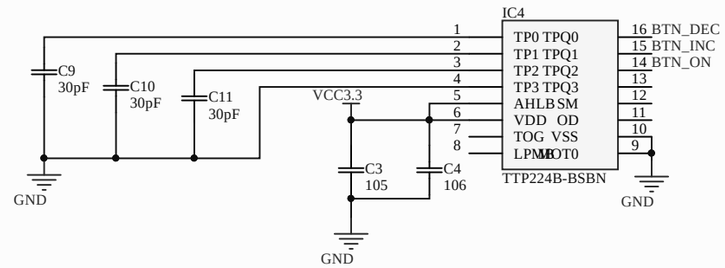

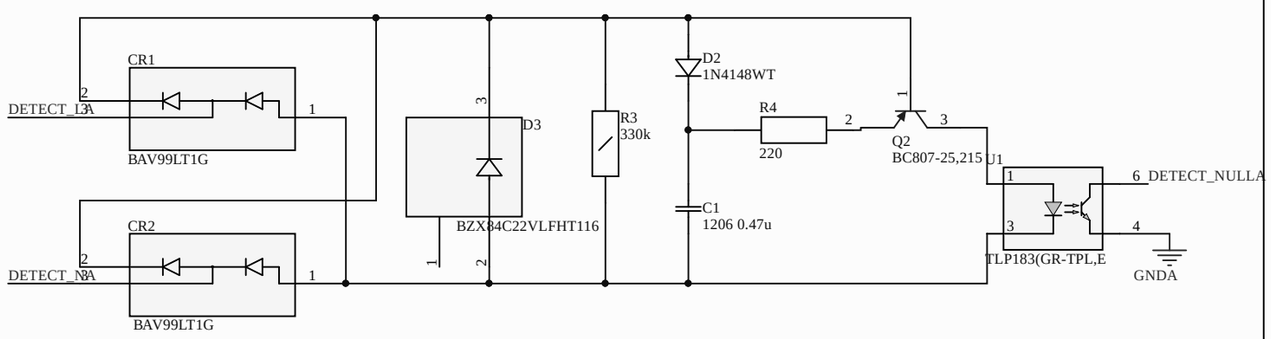

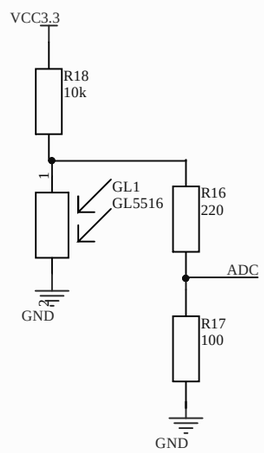

Power

Title		
Size A3	Number	Revision
Date: 04.12.2020		Sheet of
File: C:\Users\..\dimmer.SchDoc		Drawn By: