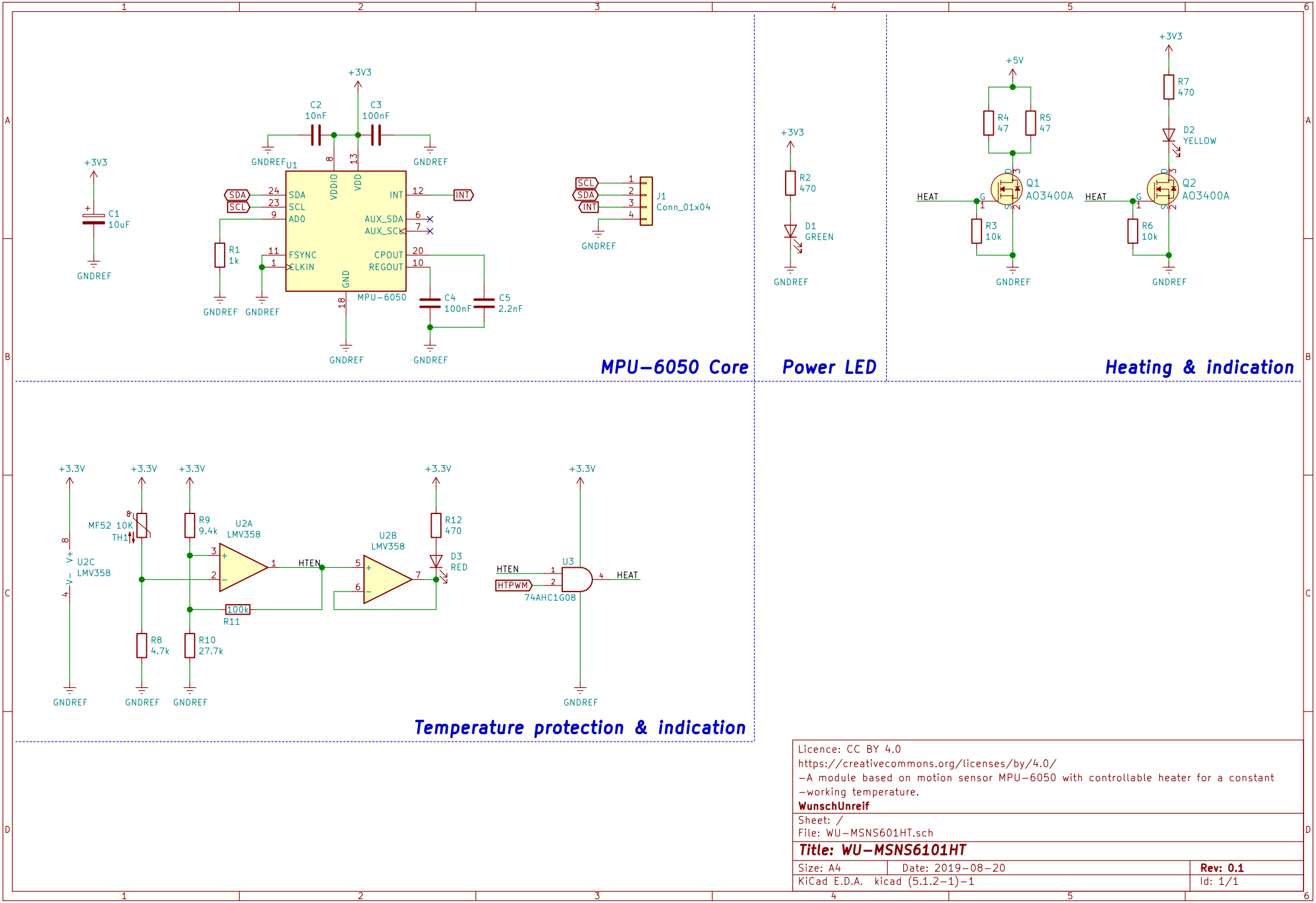

Licence: CC BY 4.0
https://creativecommons.org/licenses/by/4.0/

-A module based on motion sensor MPU-6050 with controllable heater for a constant -working temperature.

WunschUnreif

Sheet: /
File: WU-MSNS601HT.sch

Title: WU-MSNS6101HT

Size: A4	Date: 2019-08-20	**Rev: 0.1**
KiCad E.D.A. kicad (5.1.2-1)-1		Id: 1/1