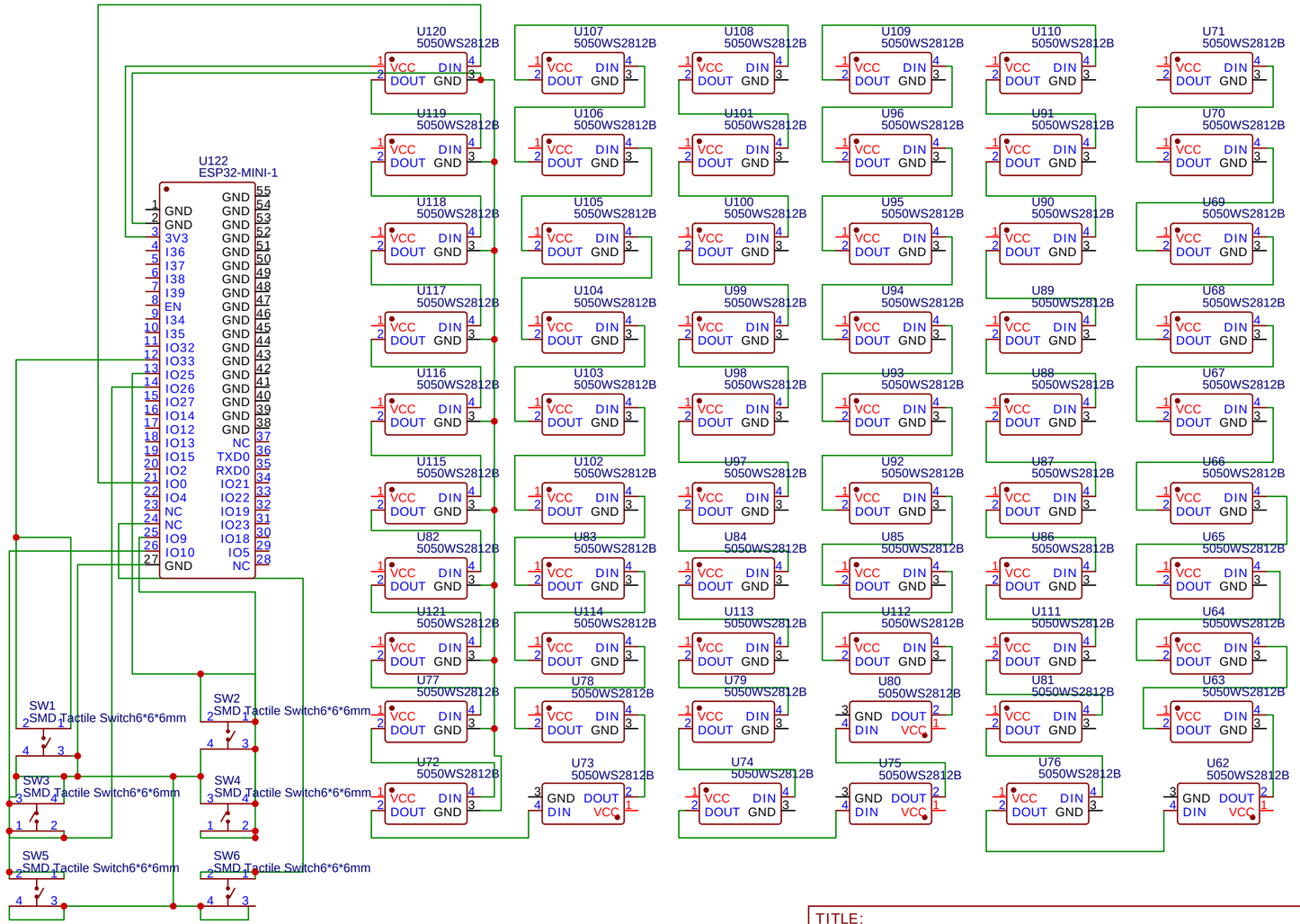

TITLE: Sheet_1		REV: 1.0
EasyEDA	Company: Wyatt Adolph	Sheet: 1/1
	Date: 2024-06-26 Drawn By: watt_469	