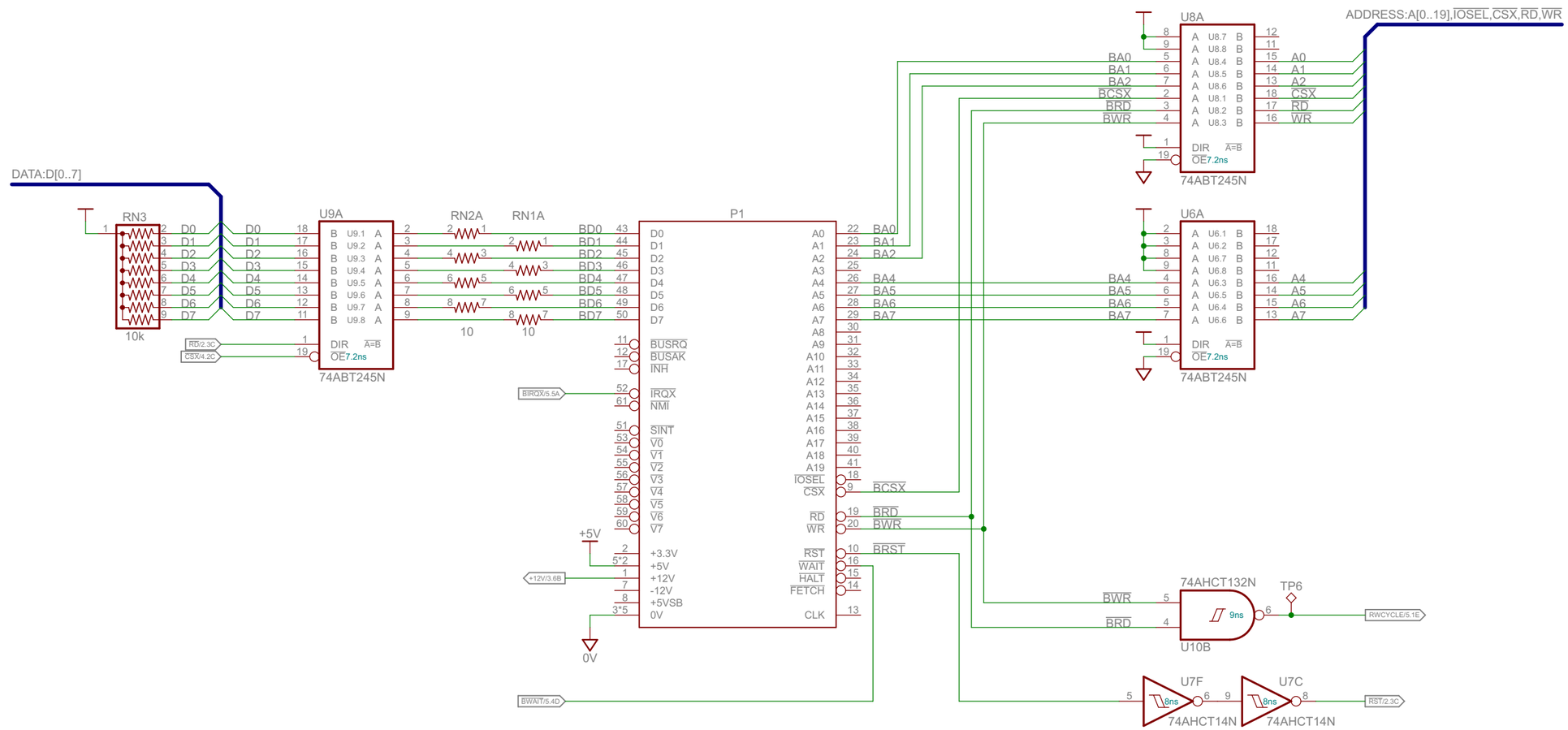

Title: Bus Interface	XMICRO
Project: XMICRO-CF	Revision: 1.0
Drawn by: Chris Weir 2024-04-06 13:06:02	Sheet: 1/5