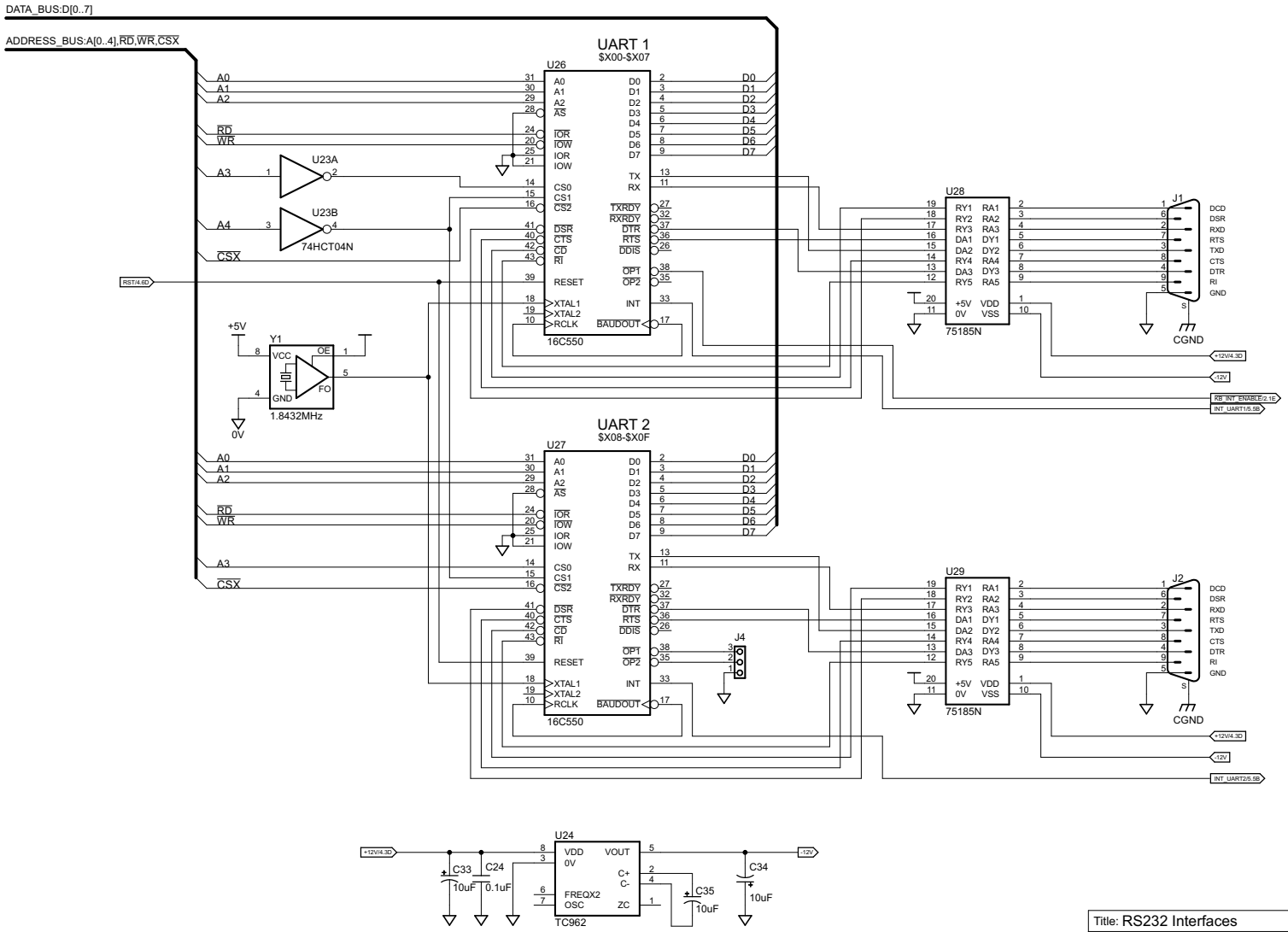

Title: RS232 Interfaces		XMICRO
Project: XMICRO-SERIAL		Revision: 1.0
Drawn by: Chris Weir	2024-09-08 19:41:31	Sheet: 1/6

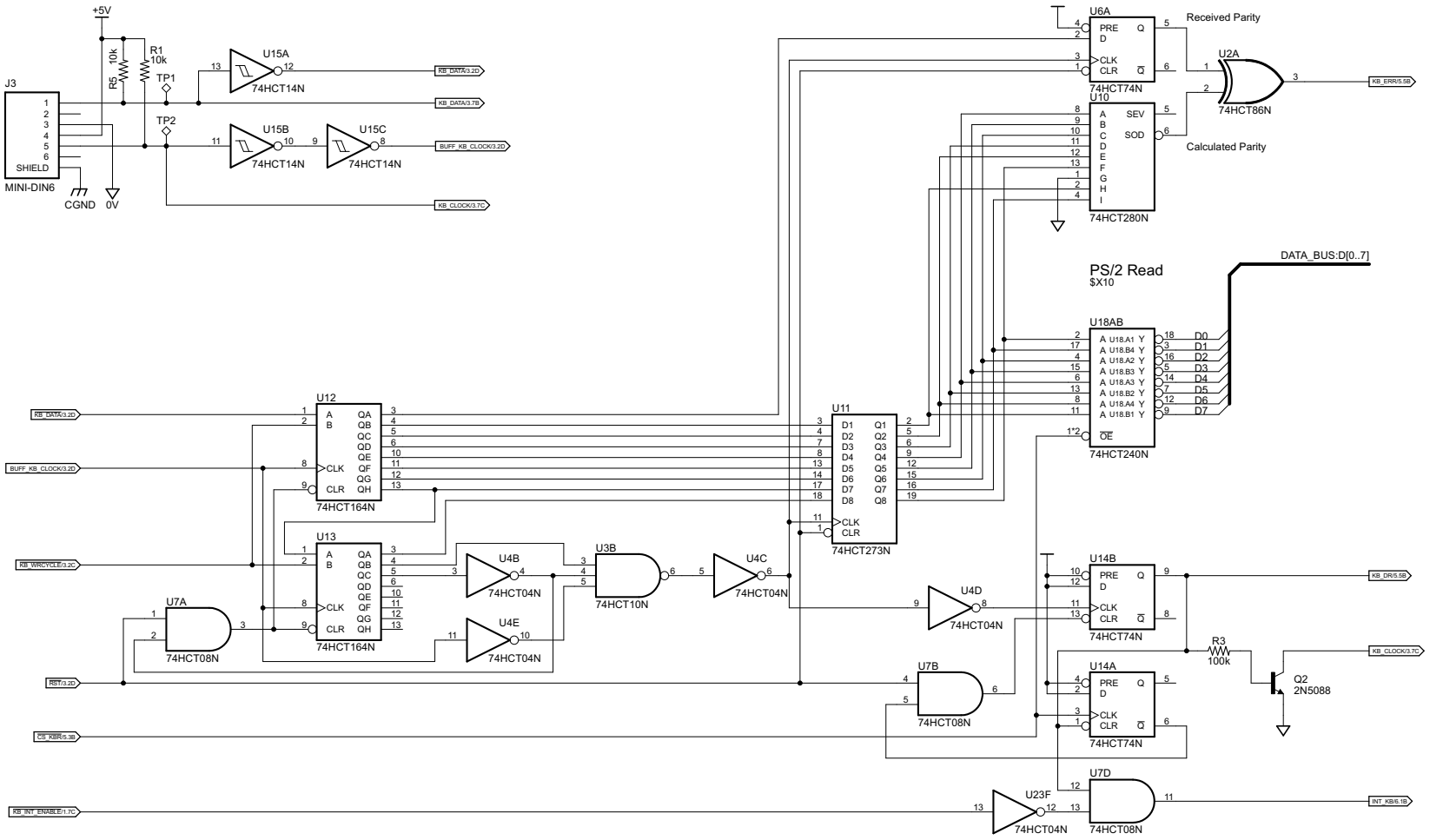

Title: PS/2 Receive	XMICRO
Project: XMICRO-SERIAL	Revision: 1.0
Drawn by: Chris Weir 2024-09-08 19:41:31	Sheet: 2/6

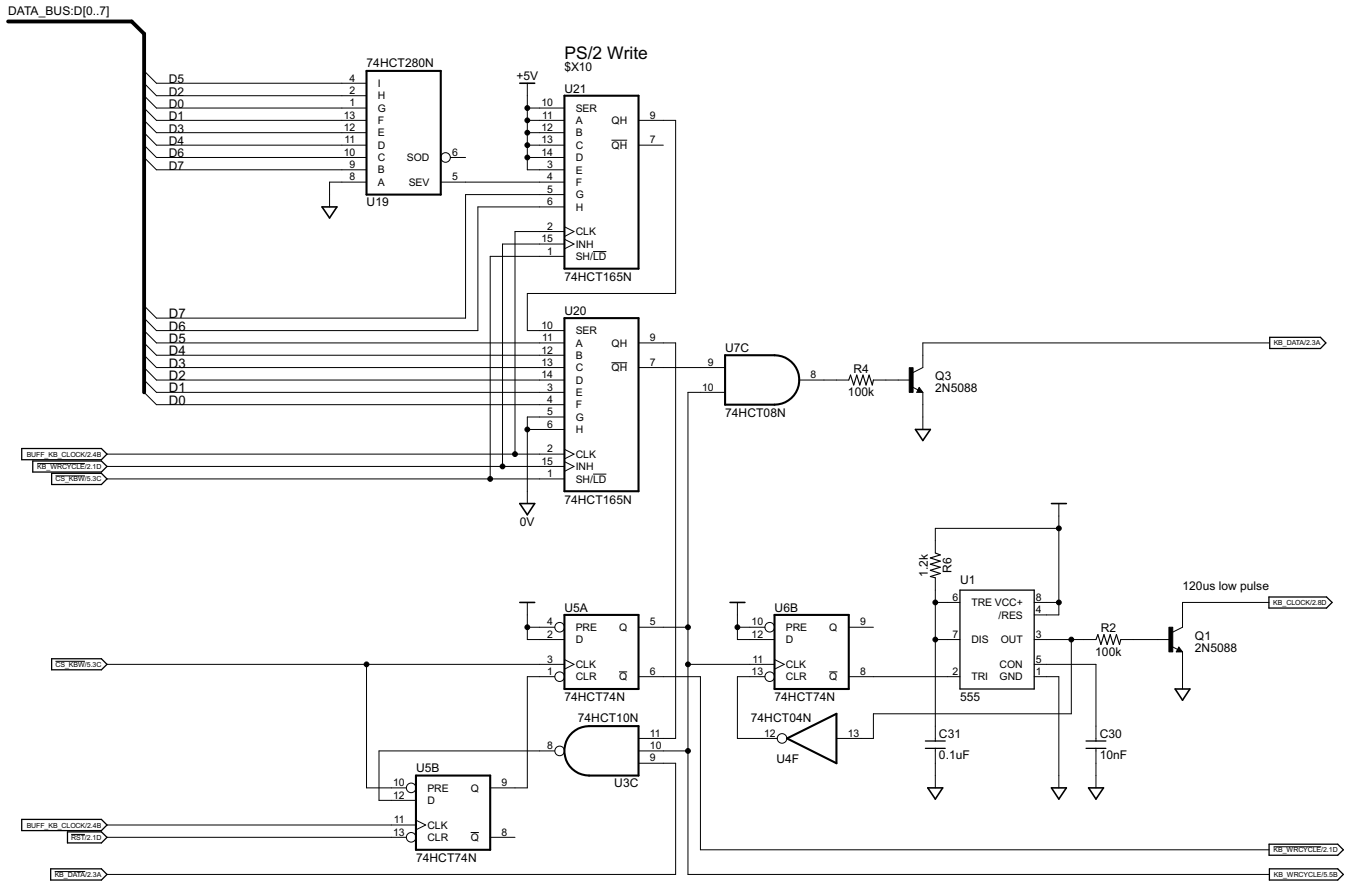

Title: PS/2 Transmit	XMICRO
Project: XMICRO-SERIAL	Revision: 1.0
Drawn by: Chris Weir 2024-09-08 19:41:31	Sheet: 3/6

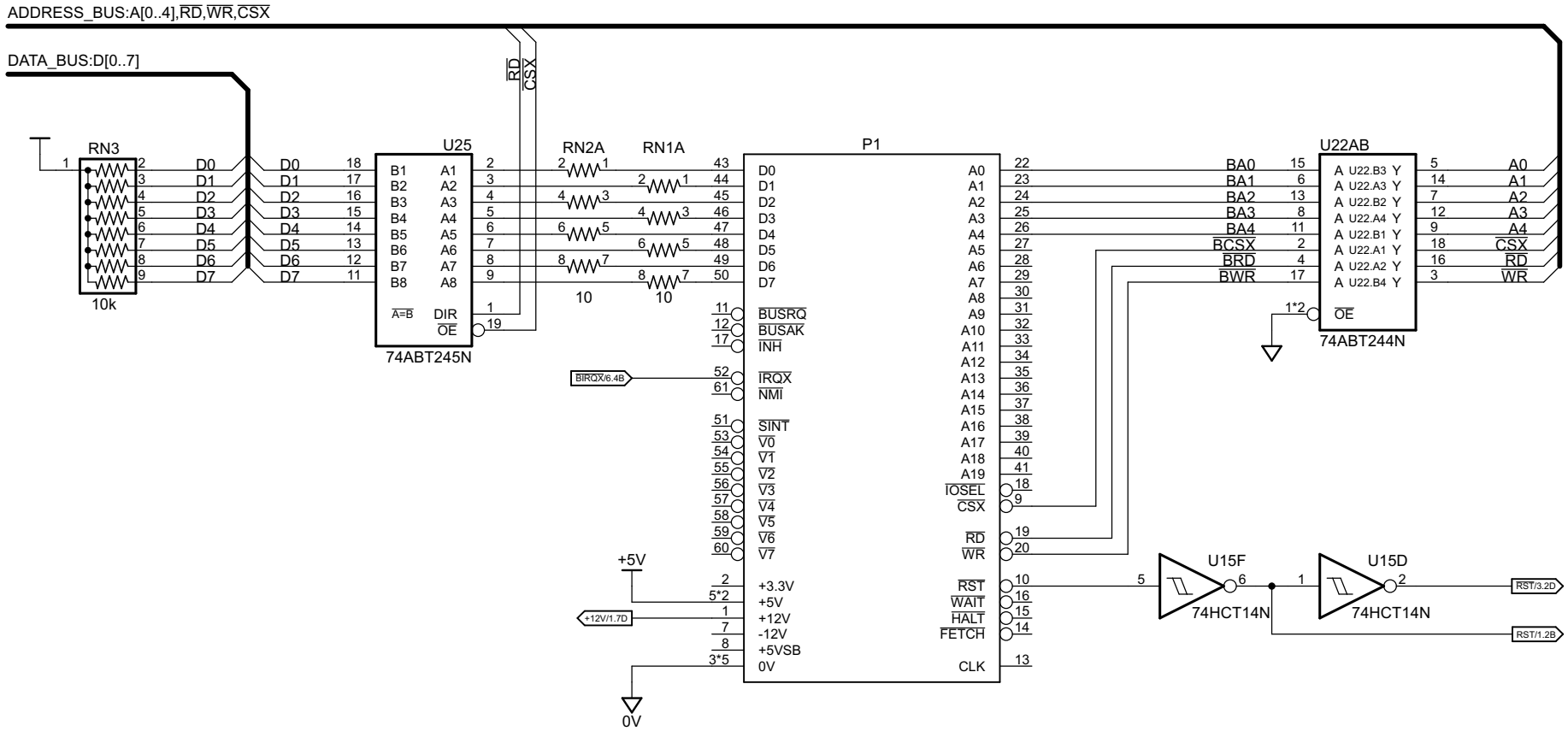

Title: Bus Interface		XMICRO
Project: XMICRO-SERIAL		Revision: 1.0
Drawn by: Chris Weir	2024-09-08 19:41:31	Sheet: 4/6

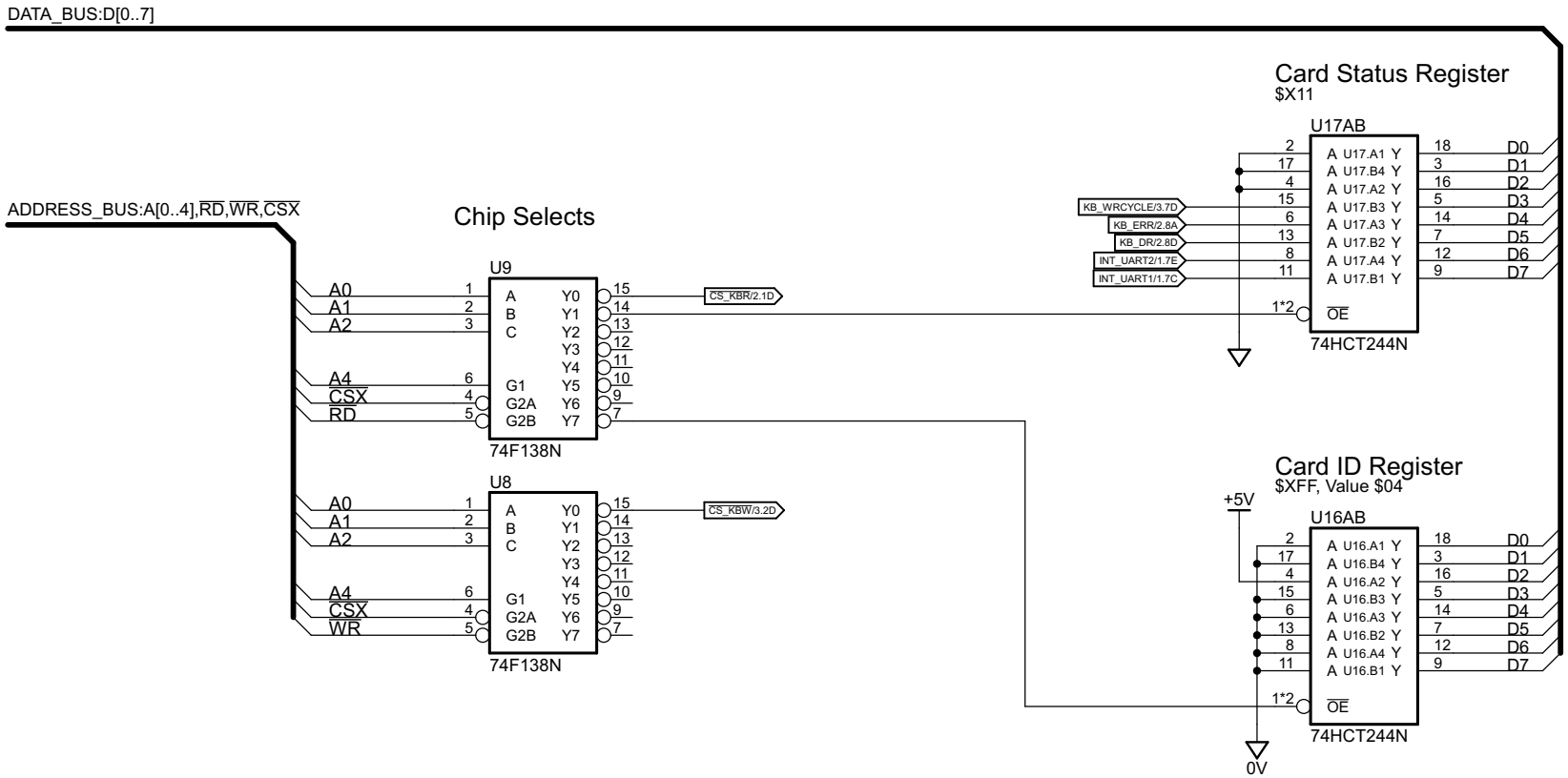

Title: Chip Selects/Registers		XMICRO
Project: XMICRO-SERIAL		Revision: 1.0
Drawn by: Chris Weir	2024-09-08 19:41:31	Sheet: 5/6

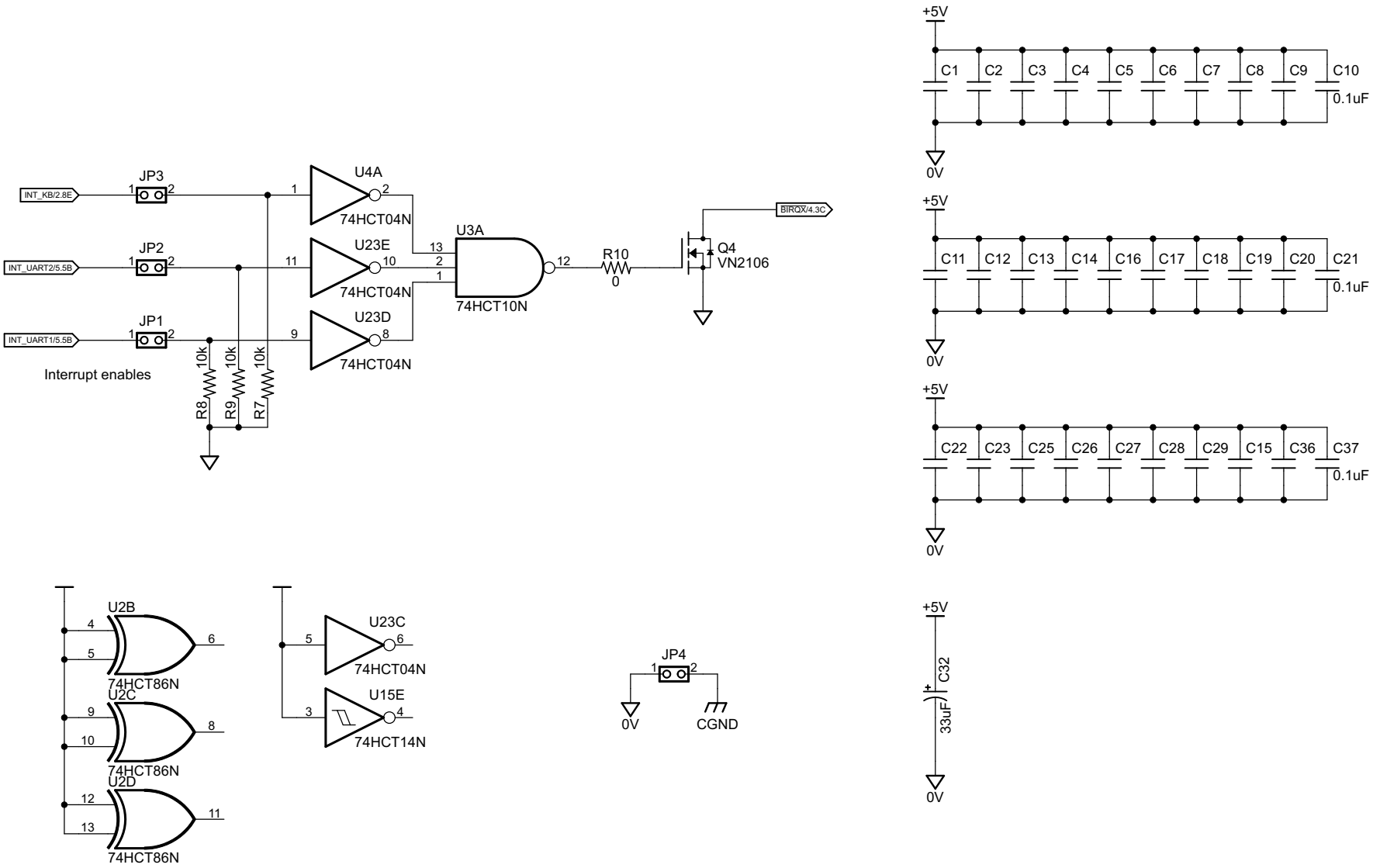

Title: Misc.		XMICRO
Project: XMICRO-SERIAL		Revision: 1.0
Drawn by: Chris Weir	2024-09-08 19:41:31	Sheet: 6/6