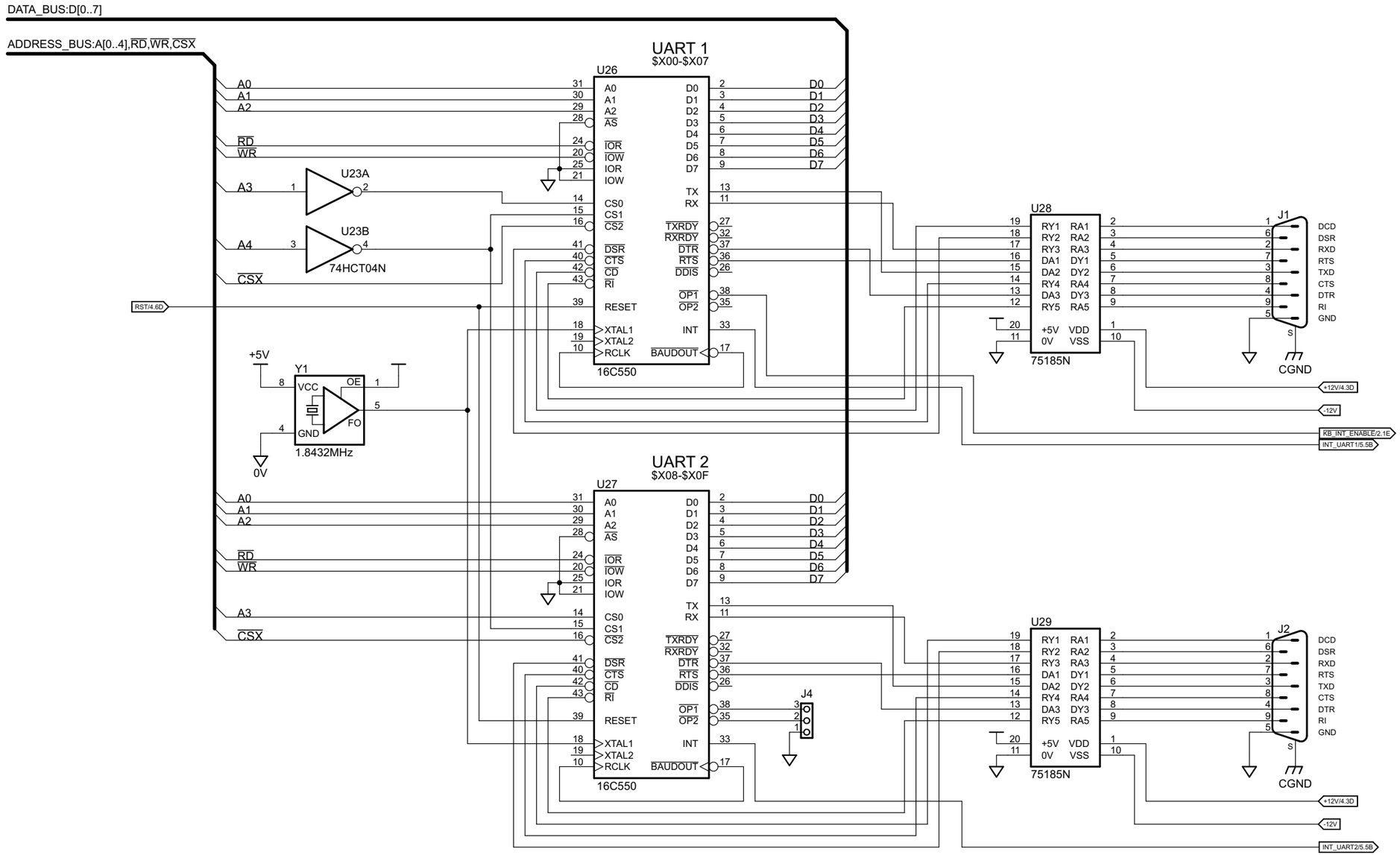

Title: RS232 Interfaces	XMICRO
Project: XMICRO-SERIAL	Revision: 1.0
Drawn by: Chris Weir 2024-09-08 19:41:31	Sheet: 1/6