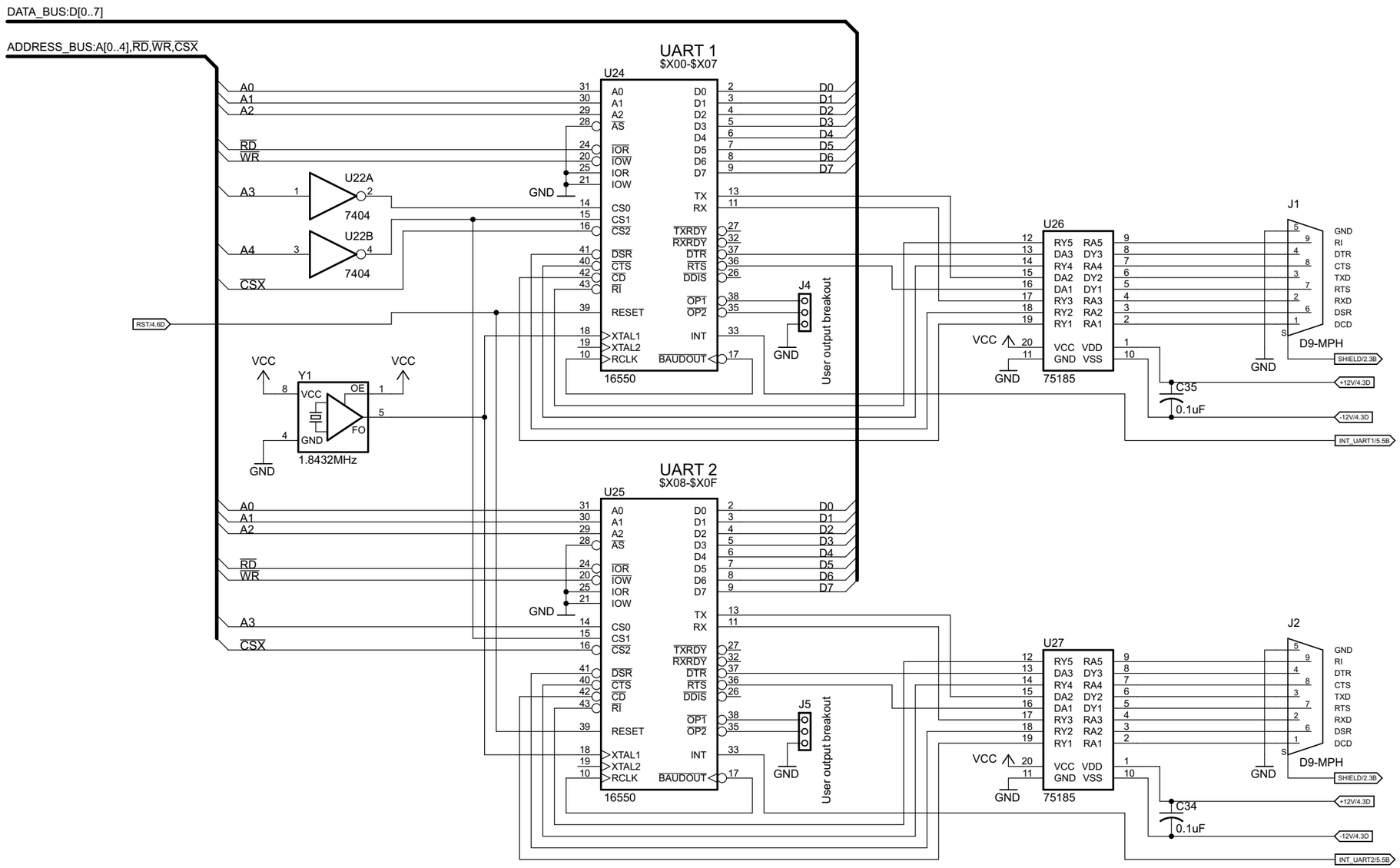

UARTs

16C550 UARTs and RS-232 drivers

Project: XMICRO-SERIAL V1.1	Chris Weir
10/26/2019 10:00:57 PM	Sheet:1/6

If a parity error is detected, software should wait for the keyboard to finish sending data before reading the data register. (approx. 1ms)
This inhibits the keyboard clock and allows the shift registers to resync with the next transmission, as they were reset when the interrupt was triggered.

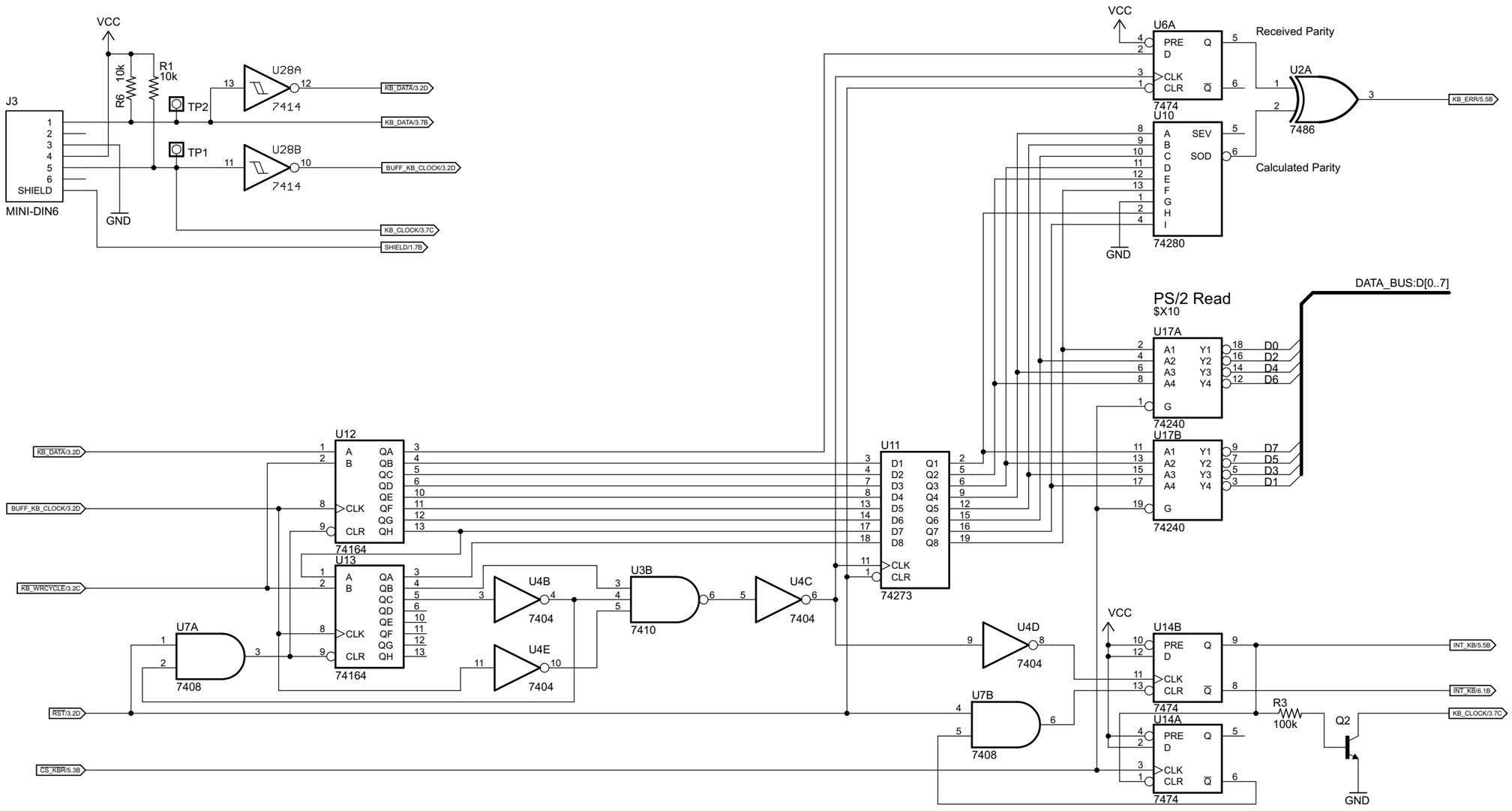

PS/2 Read

Receives data from PS/2 devices. An interrupt is generated when a byte is received and cleared when the data register is read by the CPU.

Project: XMICRO-SERIAL V1.1	Chris Weir
10/26/2019 10:00:57 PM	Sheet:2/6

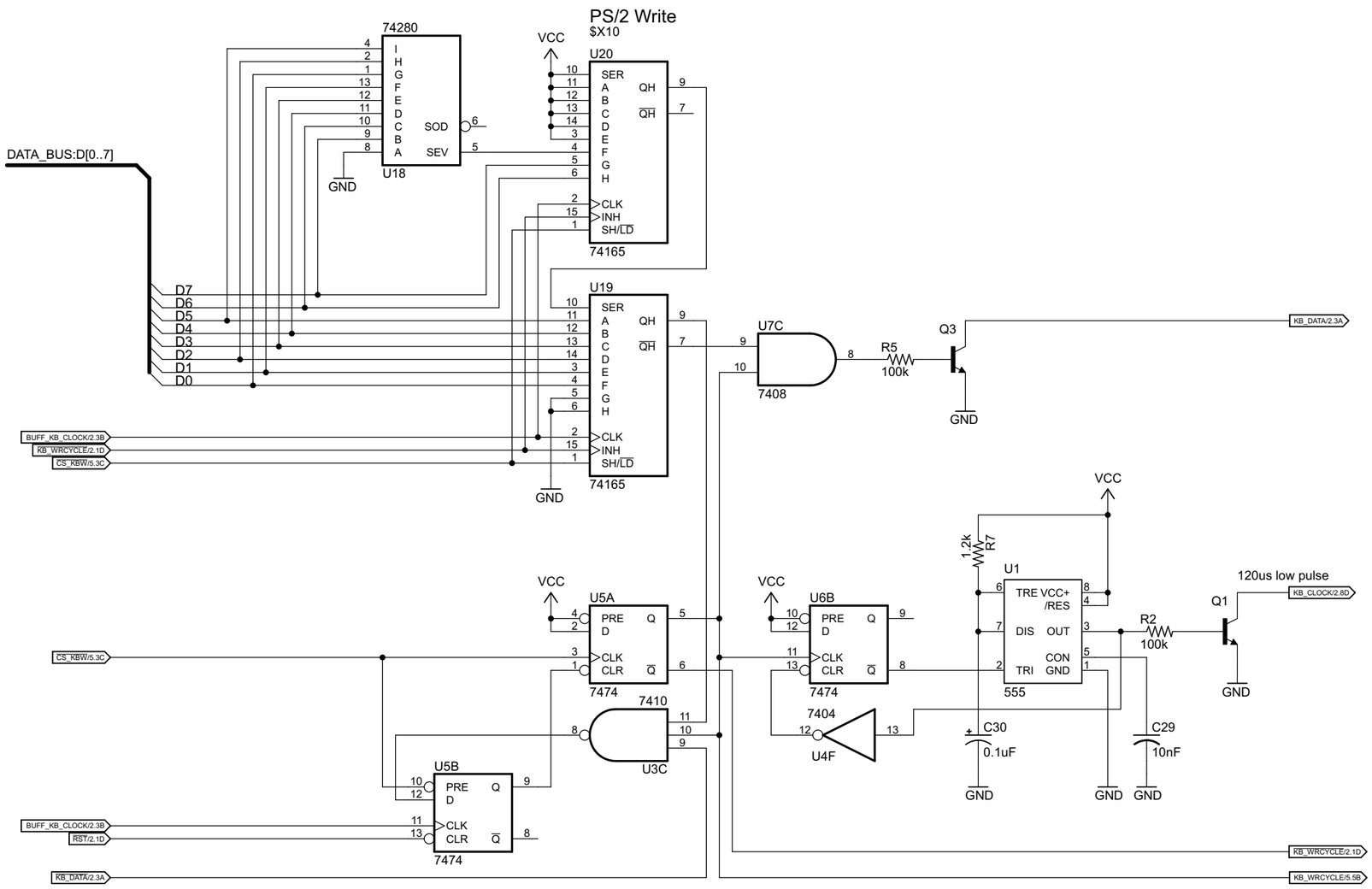

PS/2 Write

Sends data to PS/2 devices.

Project: XMICRO-SERIAL V1.1	Chris Weir
10/26/2019 10:00:57 PM	Sheet:3/6