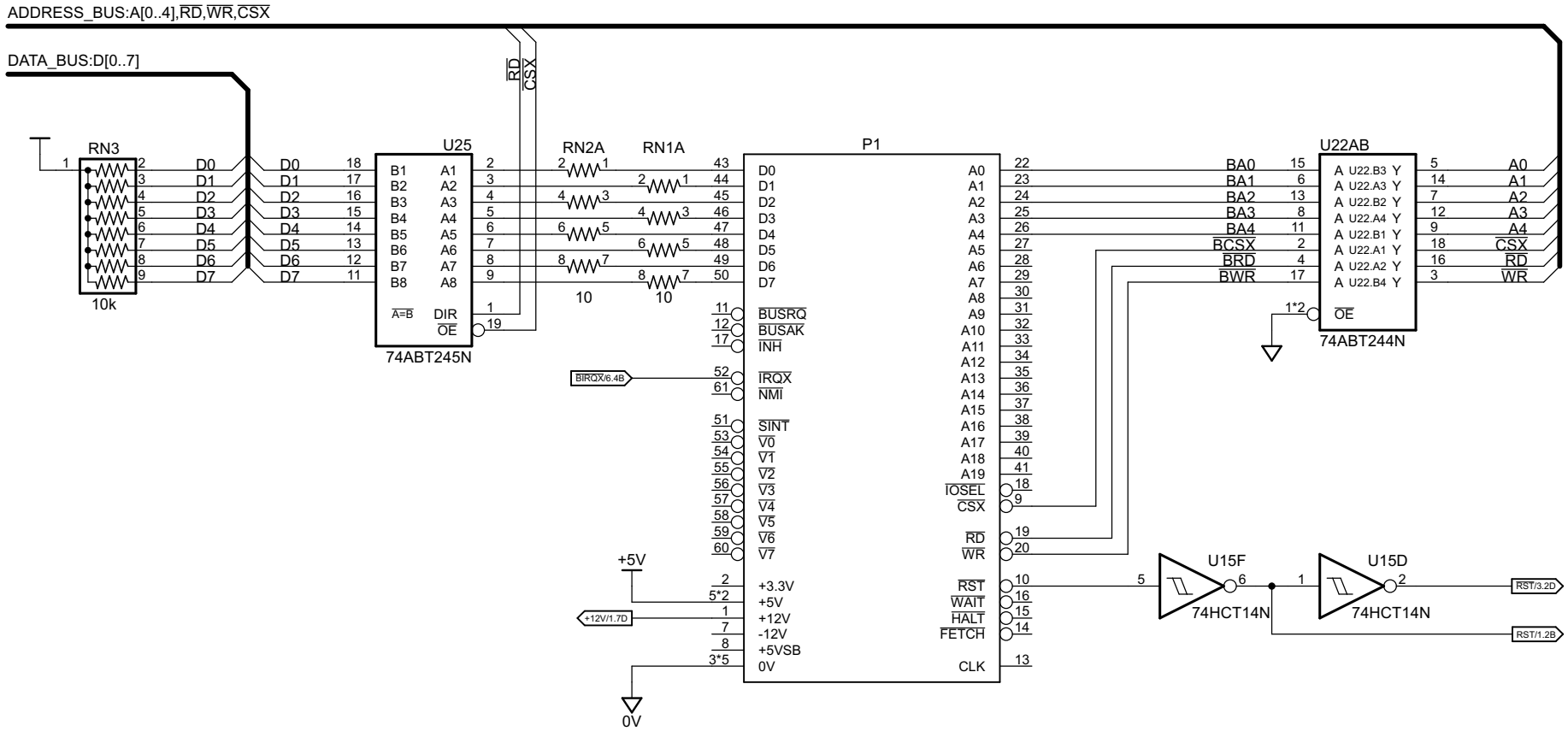

Title: Bus Interface		XMICRO
Project: XMICRO-SERIAL		Revision: 1.0
Drawn by: Chris Weir	2024-09-08 19:41:31	Sheet: 4/6