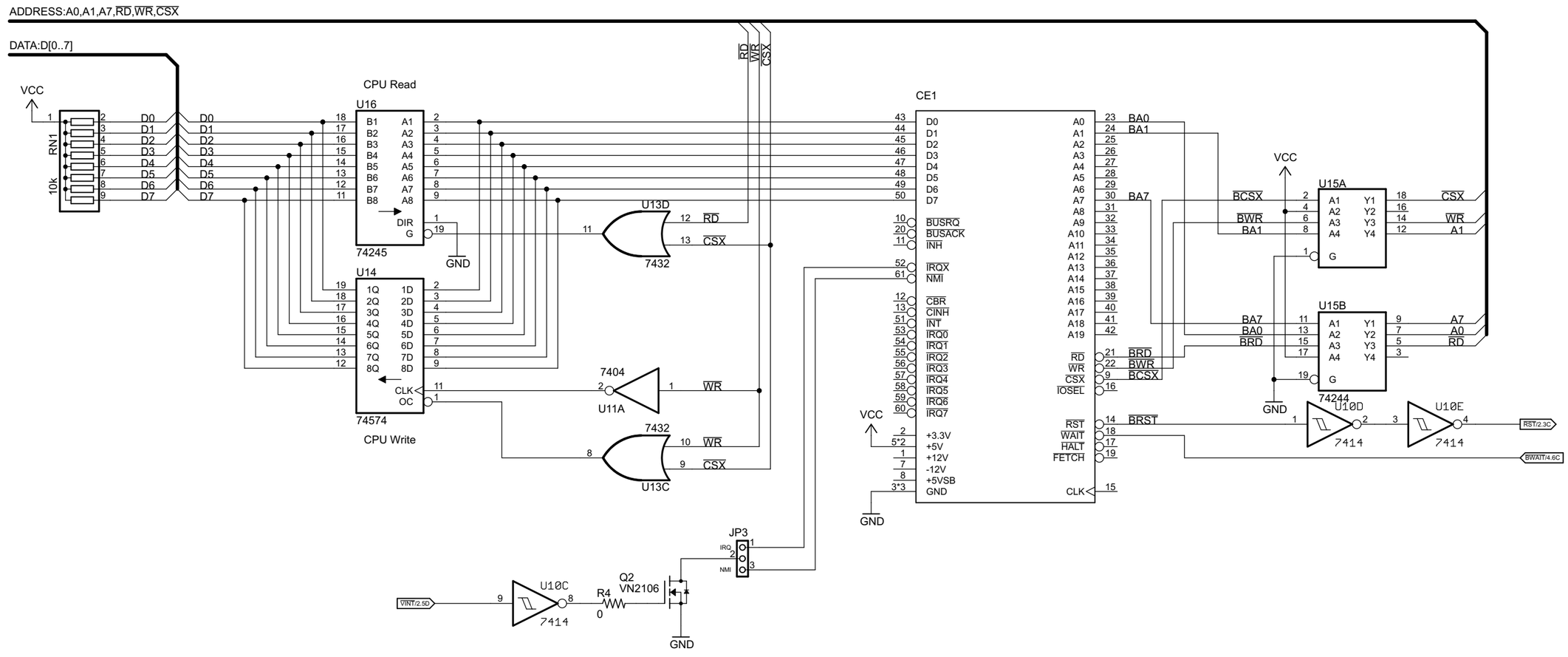

Bus Connector/Buffers

XMICRO bus interface. Buffers provide isolation and reduced loading on bus lines.

Project: XMICRO-VDP	Chris Weir
11/19/2019 8:13:02 PM	Sheet:1/5

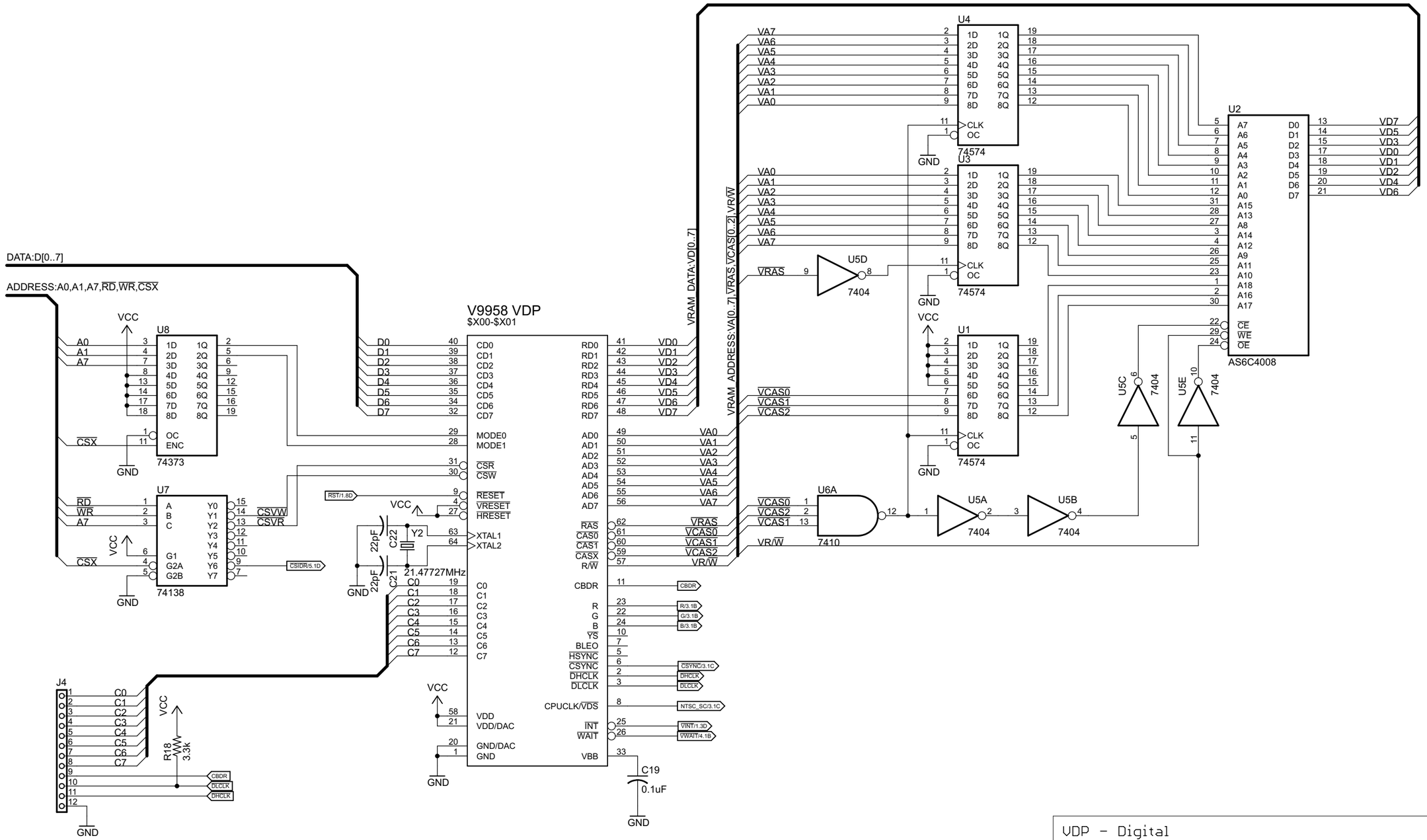

VDP - Digital

Yamaha V9958 VDP digital interface

Project: XMICRO-VDP	Chris Weir
11/19/2019 8:13:02 PM	Sheet: 2/5