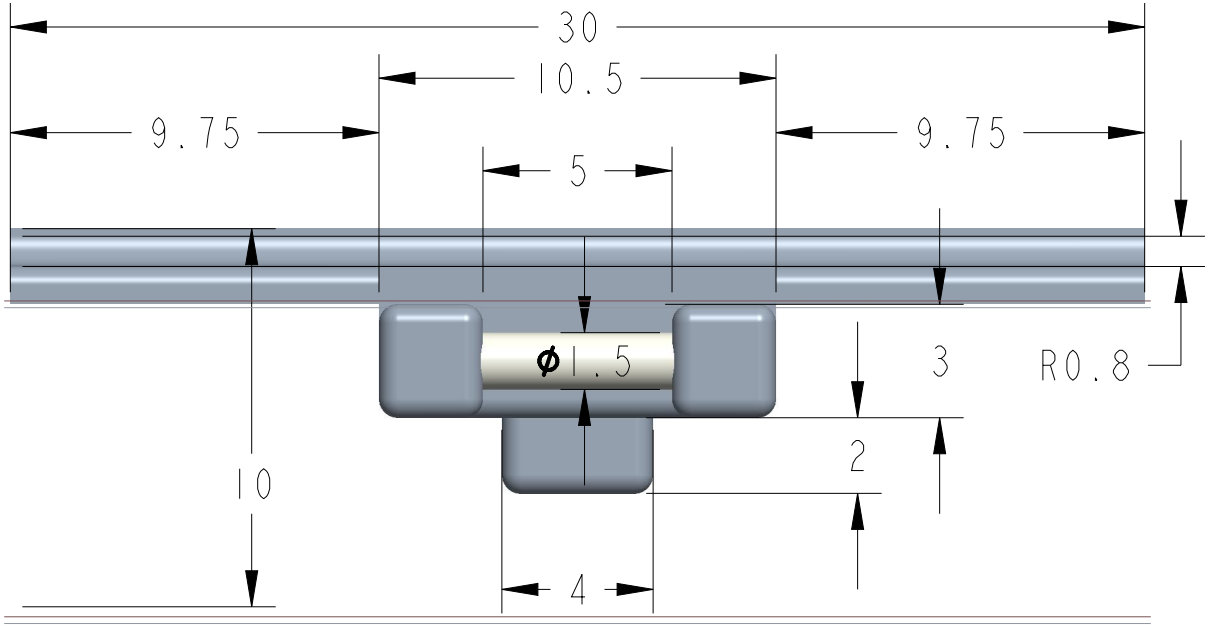
30
10.5
9.75
9.75
5
ϕ1.5
3
R0.8
2
10
4

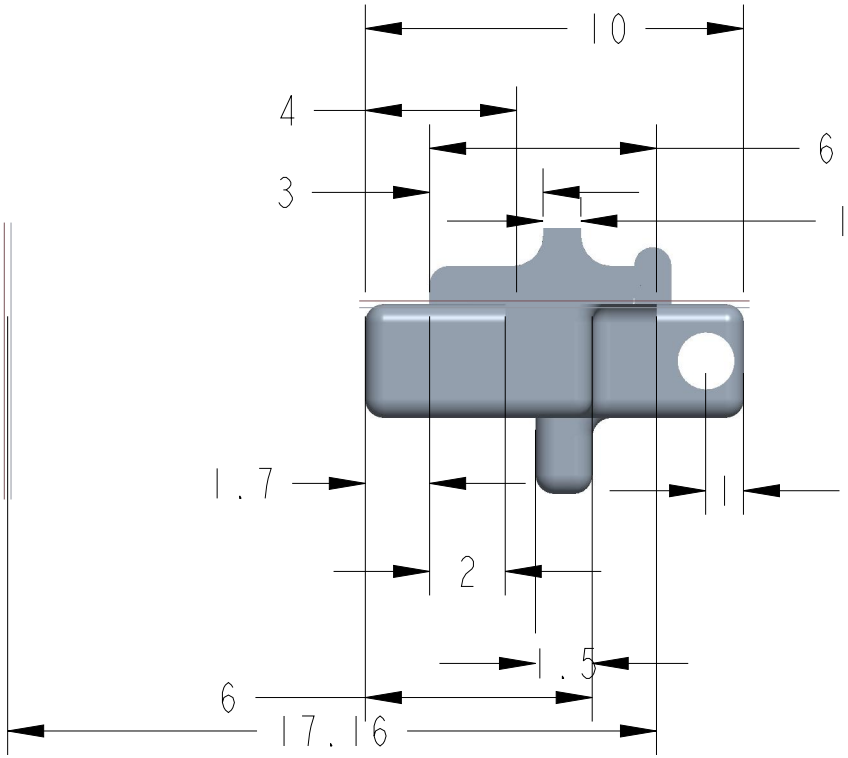
10
4
6
3
1
1.7
1
2
1.5
6
17.16

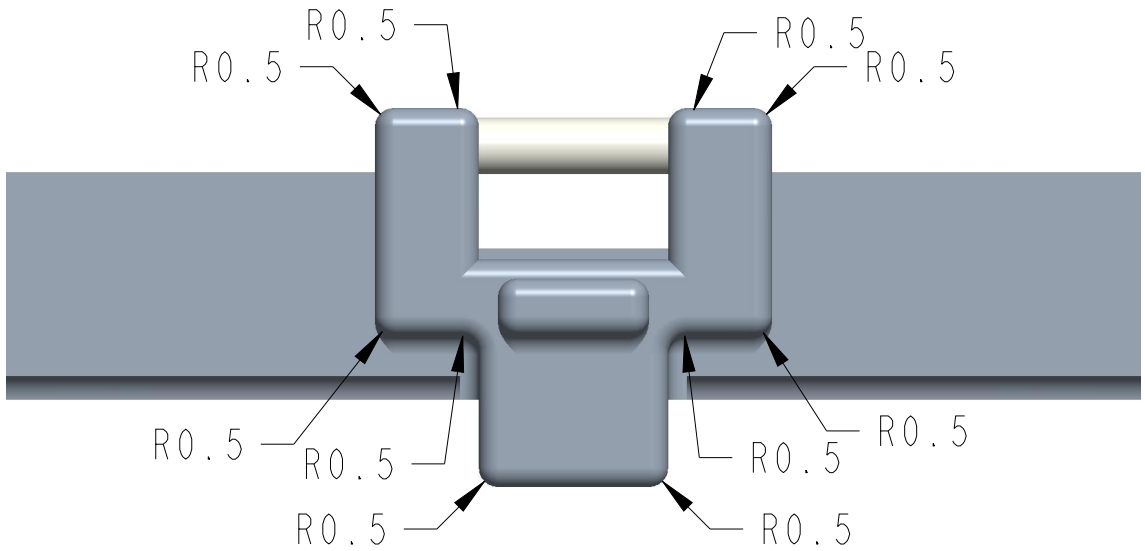
R0.5
R0.5
R0.5
R0.5
R0.5
R0.5
R0.5
R0.5
R0.5
R0.5

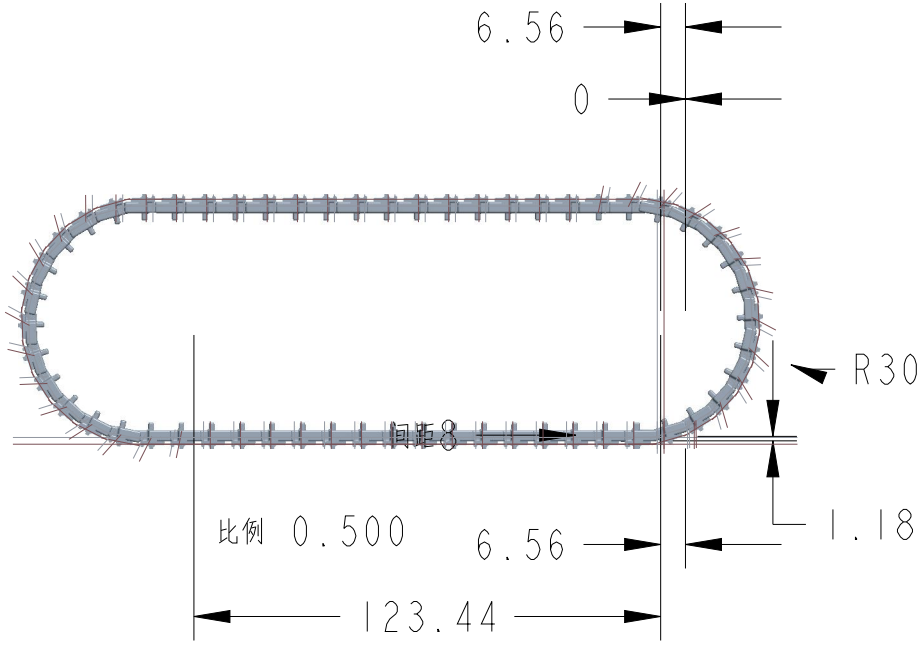
6.56
0
R30
间距8
1.18
比例 0.500
6.56
123.44