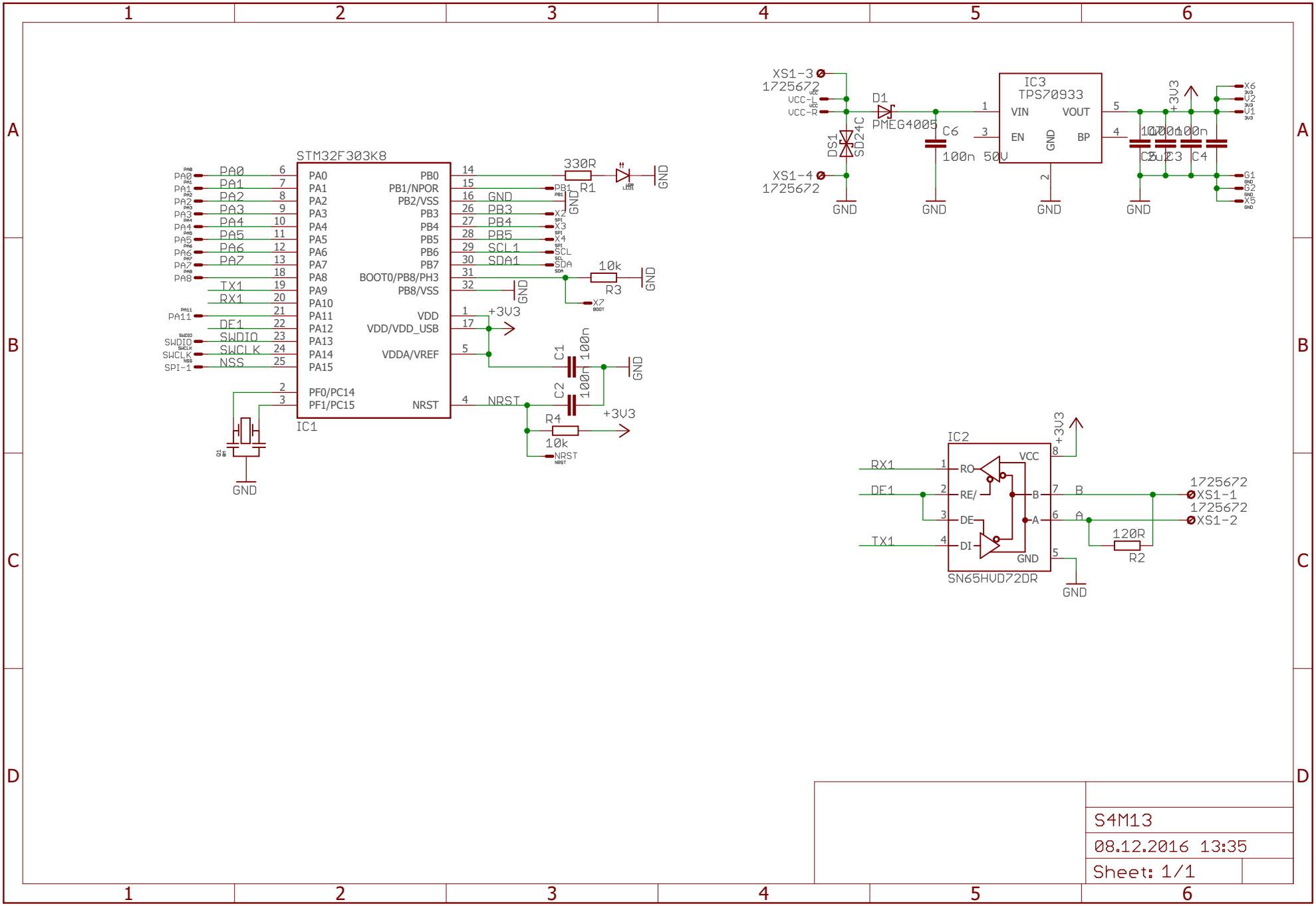

S4M13

08.12.2016 13:35

Sheet: 1/1

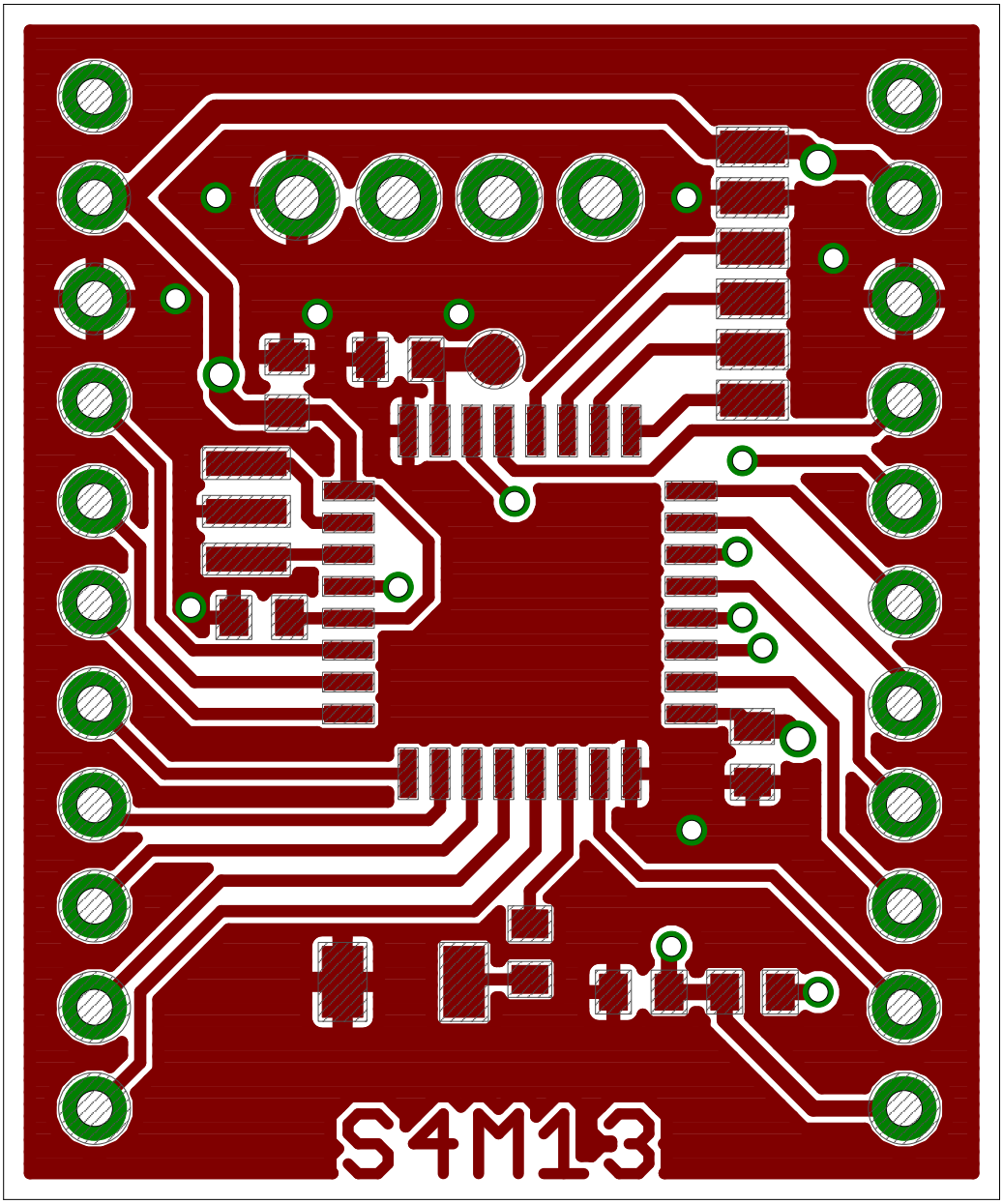
S4M13

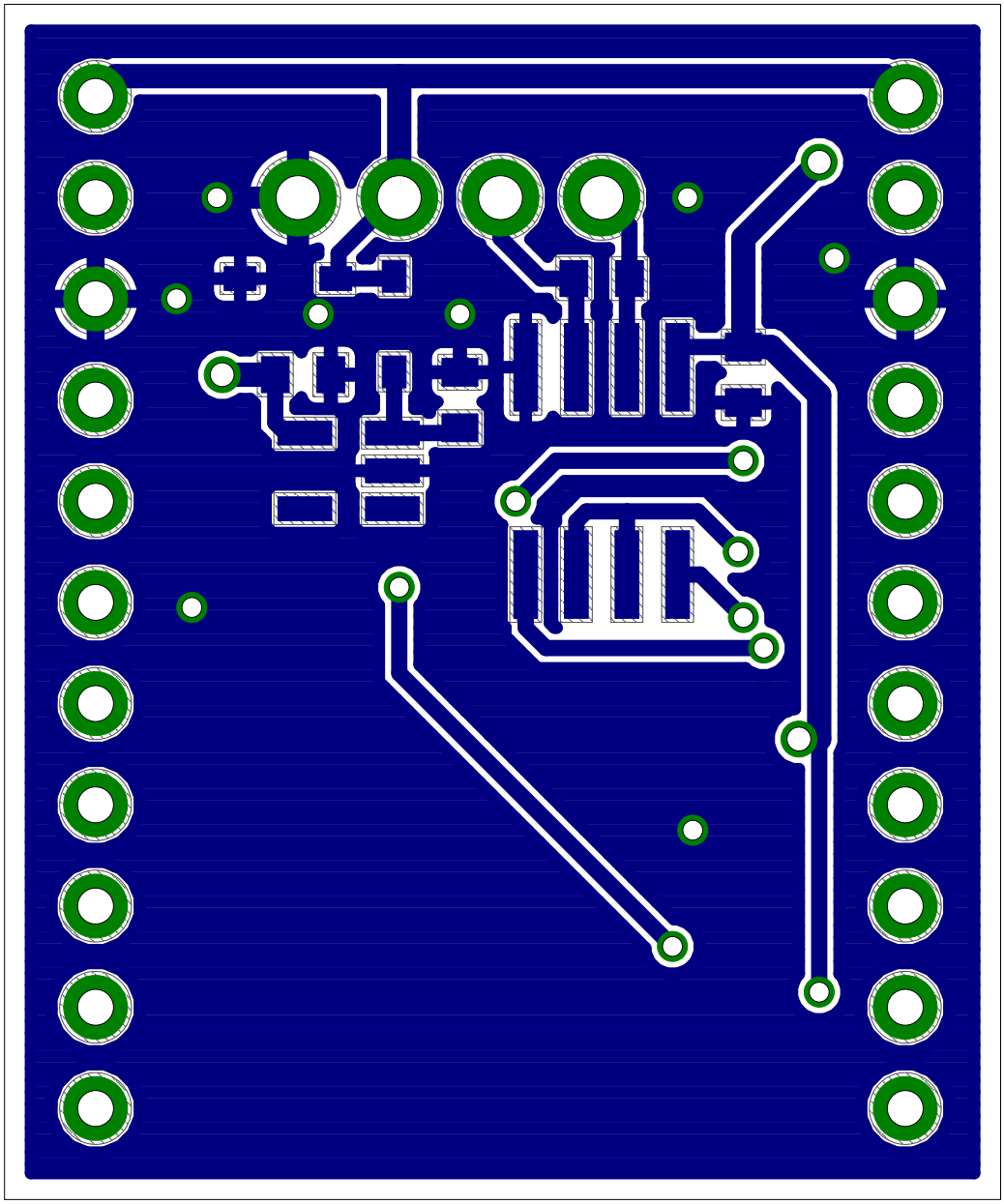

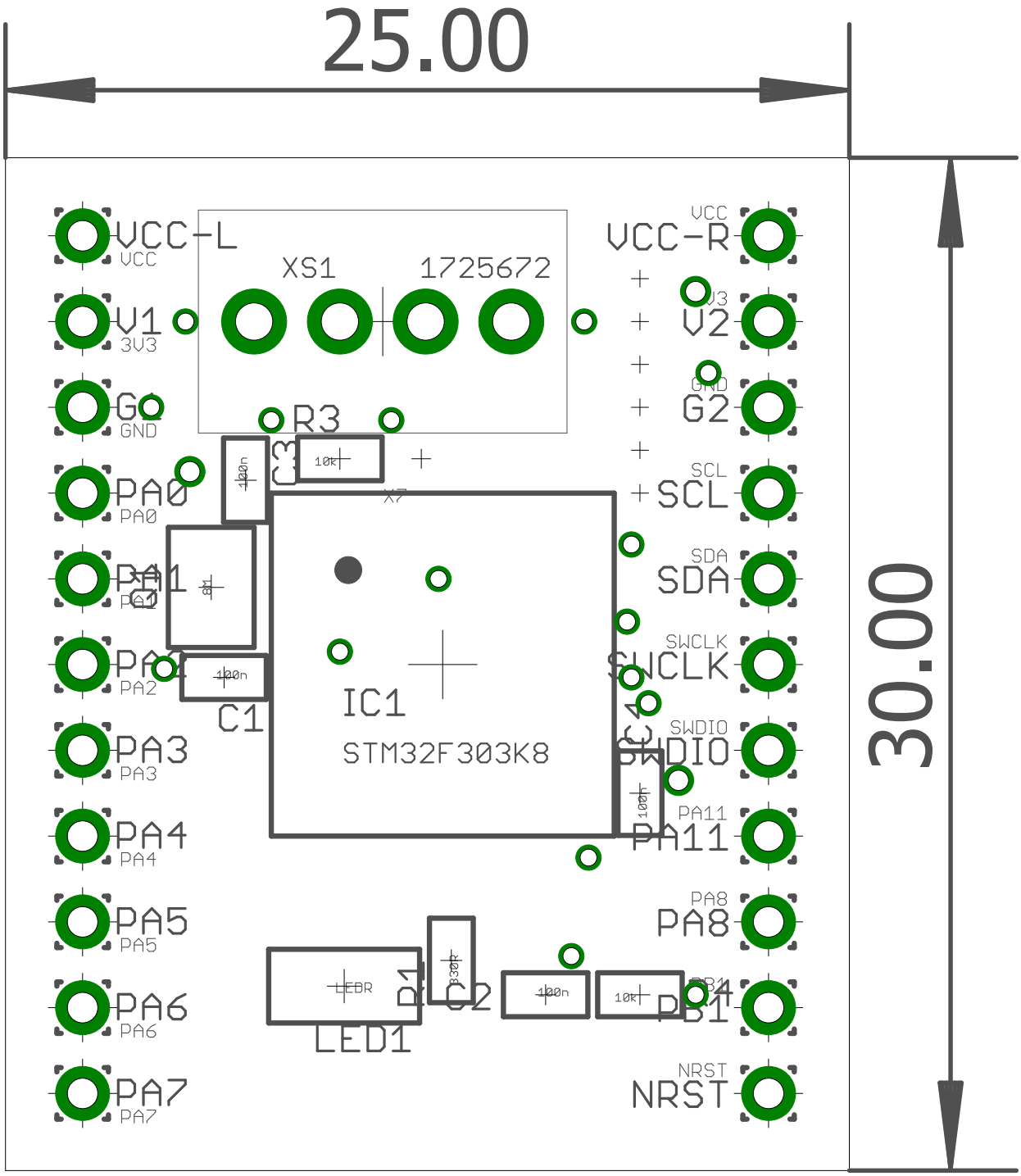
25.00
30.00
VCC-L
VCC
V1
3V3
G1
GND
PA0
PA0
PA1
PA1
PA2
PA2
PA3
PA3
PA4
PA4
PA5
PA5
PA6
PA6
PA7
PA7
XS1
1725672
R3
C3
10k
100n
C2
C1
IC1
STM32F303K8
VCC-R
VCC
V2
3V3
G2
GND
SCL
SCL
SDA
SDA
SWCLK
SWCLK
SWDIO
SWDIO
C4
100n
PA11
PA11
PA8
PA8
PB1
PB1
NRST
NRST
LED1
LEDR
R1
330R
C2
100n
10k

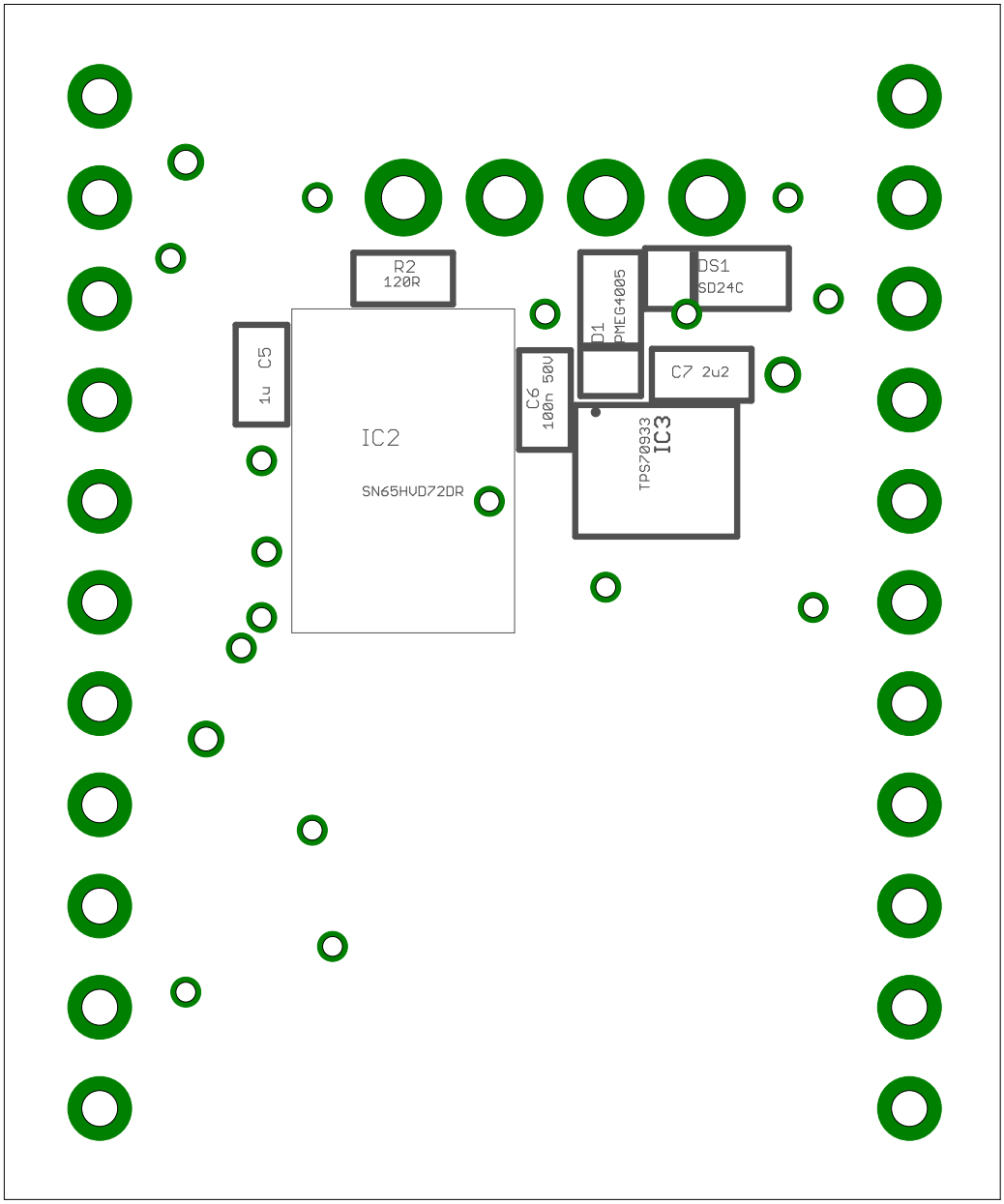
R2
120R
C5
1u
IC2
SN65HVD72DR
C6
100n 50V
D1
PMEG4005
DS1
SD24C
C7 2u2
IC3
TPS70933