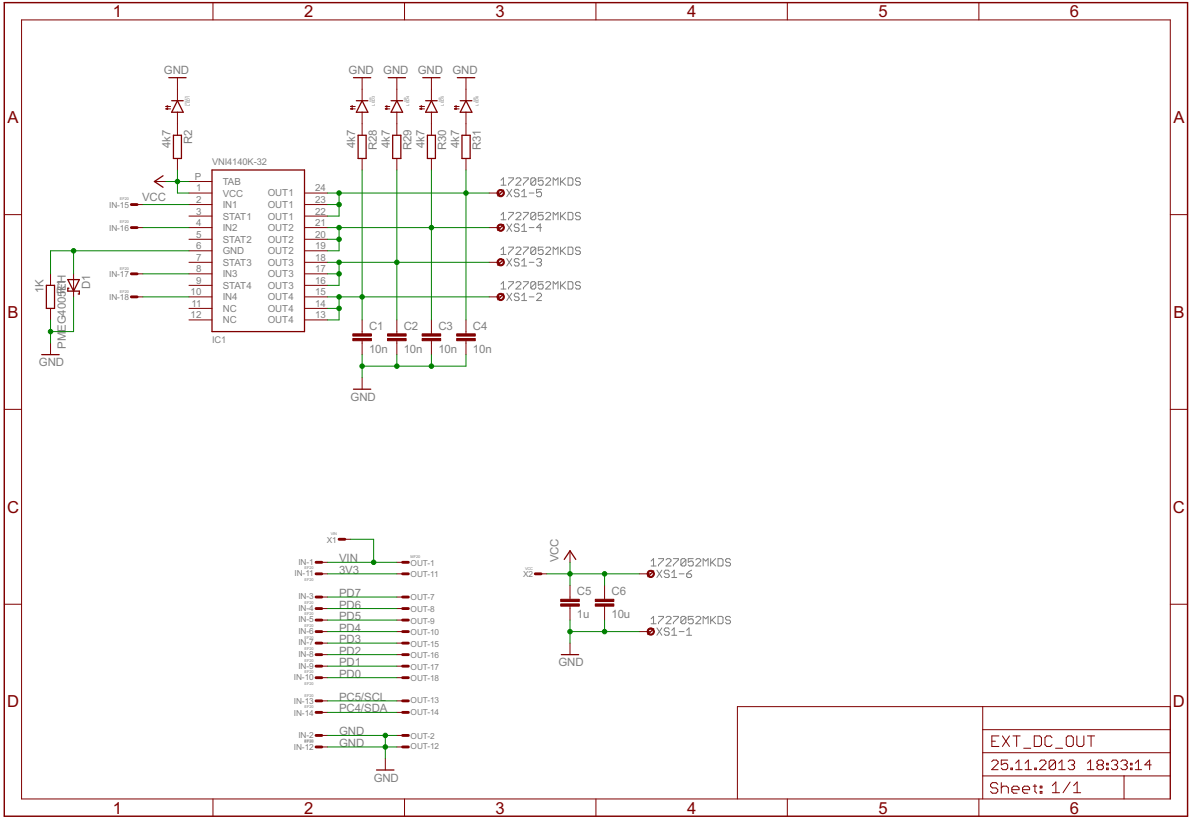
GND
4k7
R2
VNI4140K-32
TAB
VCC
IN1
STAT1
IN2
STAT2
GND
STAT3
IN3
STAT4
IN4
NC
NC
OUT1
OUT1
OUT2
OUT2
OUT3
OUT3
OUT4
OUT4
IC1
VCC
IN-15
IN-16
IN-17
IN-18
1K
PWM
G4.00EH
D1
R25
R29
R30
R31
1727052MKDS
XS1-5
XS1-4
XS1-3
XS1-2
C1
C2
C3
C4
10n
X1
VIN
3V3
IN-1
IN-11
OUT-1
OUT-11
PD7
PD6
PD5
PD4
PD3
PD2
PD1
PD0
IN-3
IN-4
IN-5
IN-6
IN-7
IN-8
IN-9
IN-10
OUT-7
OUT-8
OUT-9
OUT-10
OUT-15
OUT-16
OUT-17
OUT-18
PC5/SCL
PC4/SDA
IN-13
IN-14
OUT-13
OUT-14
GND
GND
IN-2
IN-12
OUT-2
OUT-12
X2
VCC
C5
C6
1u
10u
XS1-6
XS1-1
EXT_DC_OUT
25.11.2013 18:33:14
Sheet: 1/1

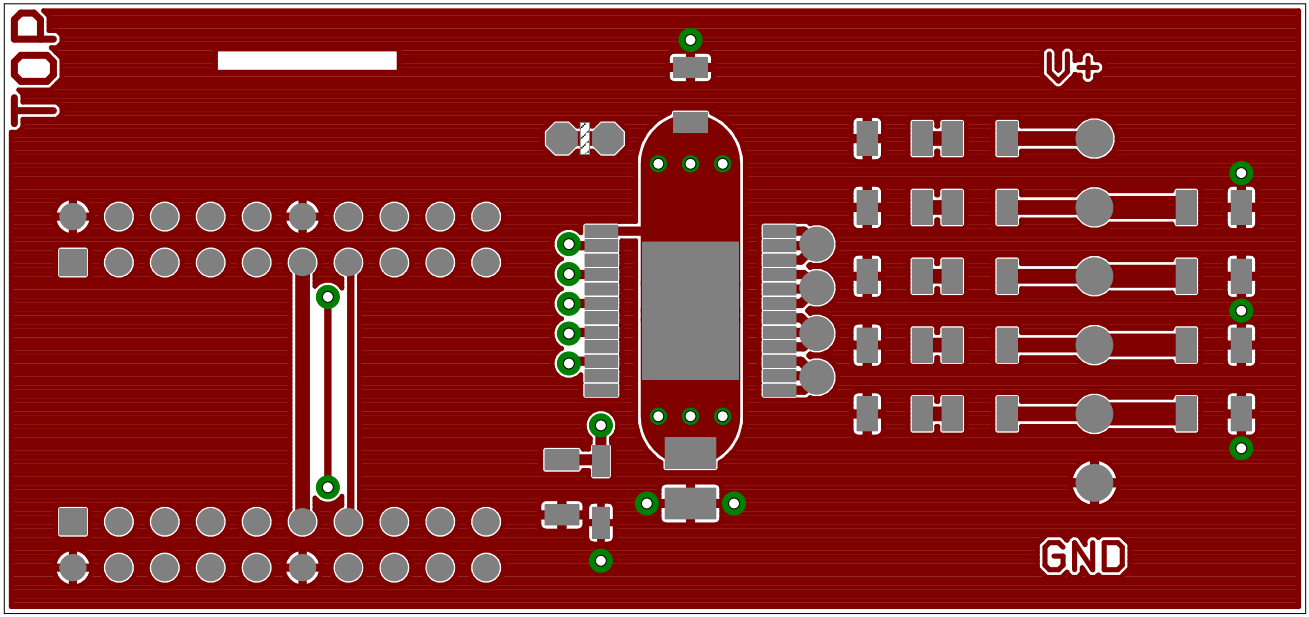
TOP
V+
GND

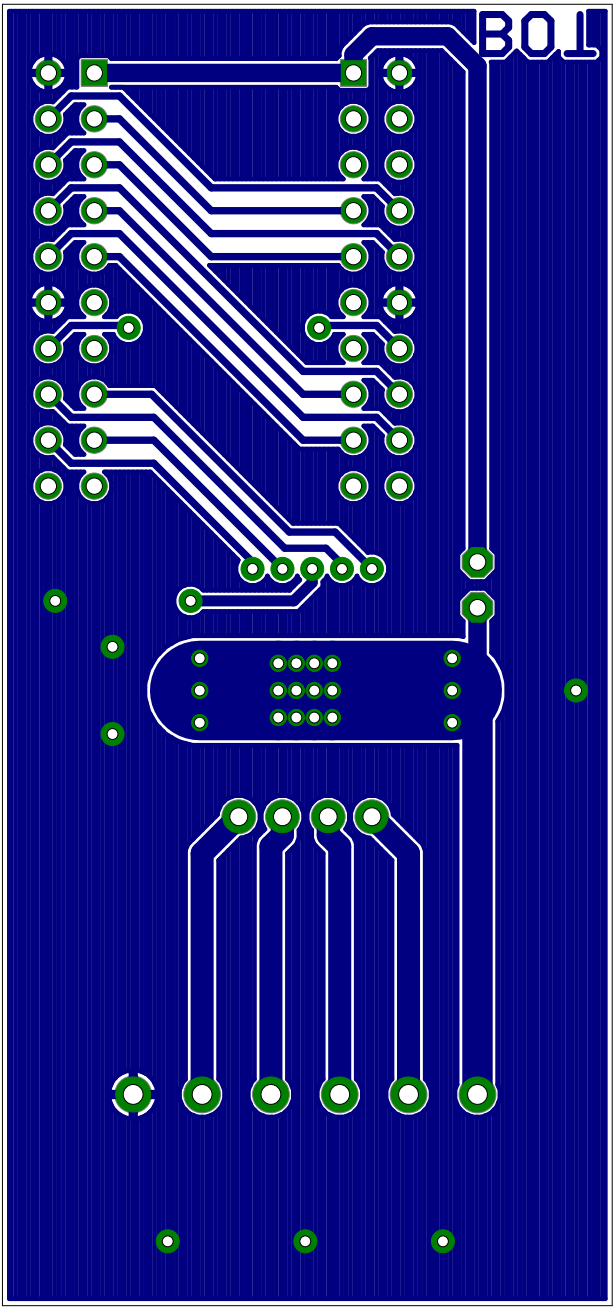
BOT

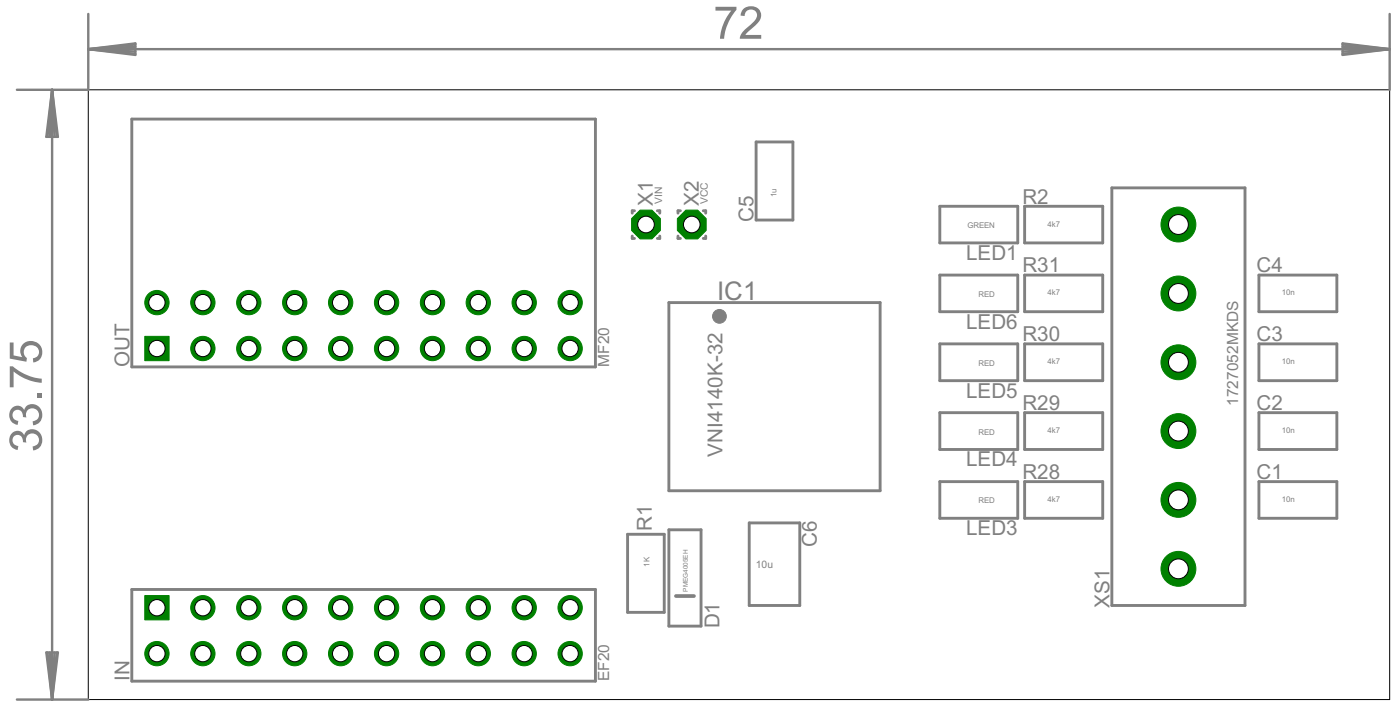
72
33.75
OUT
MF20
IN
EF20
X1
VIN
X2
VCC
C5
1u
IC1
VNI4140K-32
R1
1K
D1
MBR0530SEH
C6
10u
R2
4k7
GREEN
LED1
R31
4k7
RED
LED6
R30
4k7
RED
LED5
R29
4k7
RED
LED4
R28
4k7
RED
LED3
XS1
1727052MKDS
C4
10n
C3
10n
C2
10n
C1
10n