ENGINEERING DESIGN PROJECT · ESTONIAN AVIATION ACADEMY · 2025

Go-Kart Modelling

FIA-Compliant Hobby Kart — 3D CAD Design Report

Hendrik Tiirats · Mikk Eke Kalamees · Kristjan Sarapuu

Supervisor: Mailis Zimmermann

SolidWorks | FIA Regulations | 3D Assembly | CAD Drawings | €2,900 BOM

102.7 kg Assembly Mass	32 Modelled Parts	€2,900 Estimated BOM	SolidWorks Platform

A team of three engineering students at the Estonian Aviation Academy designed and modelled a complete FIA-compliant hobby kart in SolidWorks — producing a fully constrained 32-part assembly with technical drawings, a bill of materials, and a detailed cost estimate.

PROJECT OVERVIEW

Objectives & Approach

The project's primary objective was to design and model a FIA-compliant hobby kart using SolidWorks, with a focus on structural integrity, component interoperability, and design for maintainability. A secondary objective was to develop the team's capability to analyse and critically evaluate engineering design decisions through formal documentation.

The deliverables comprised a fully constrained SolidWorks assembly model encompassing chassis construction, a basic suspension layout, a steering system, and a braking system — together with engineering drawings conforming to ISO standards and a supporting technical report.

Vehicle Selection — Decision Matrix

Before beginning detailed design, the team evaluated five candidate vehicle concepts against three weighted criteria: cost (40%), project scope (40%), and time (20%). Scores were assigned on a 1–5 scale; the weighted total determined the final choice.

CONCEPT	Cost (0.4)	Scope (0.4)	Time (0.2)	Weighted Score
Go-Kart	4	4	4	**4.0 ✓ Selected**
Drone	3	4	4	3.6
Skateboard	5	2	1	3.0
E-Bicycle	3	2	2	2.8
IC Engine	4	1	1	2.2
Aeroplane	1	1	1	1.0

TEAM & RESPONSIBILITIES

Work Allocation

Tasks were distributed at project inception using a responsibility-assignment framework: each member owned specific subsystems end-to-end (design → model → assembly integration), while retaining the right to flag and improve any part of the shared assembly. Final sign-off on each subsystem rested with its nominated owner.

TEAM MEMBER	SUBSYSTEMS OWNED
Kristjan Sarapuu	Chassis frame · Steering system & column · Simplified engine representation · Wheels / rims
Mikk Eke Kalamees	Driver's seat · Drive system · Pedals & pedal mounts · Floor plate · Body panels / bumpers
Hendrik Tiirats	Braking system (callipers, disc, pads, master cylinder) · Wheels, hubs & tyres

DESIGN

Bill of Materials

The complete assembly comprises 32 unique part types across all subsystems. Every part was modelled as a discrete SolidWorks component and mated into the top-level assembly with fully defined geometric constraints.

PART NAME	QTY	SUBSYSTEM
Front bumper	1	Body & Chassis
Rear bumper	1	Body & Chassis
Chassis frame	1	Body & Chassis
Side body panel	2	Body & Chassis
Side panel extension	4	Body & Chassis
Floor plate	1	Body & Chassis
Driver seat	1	Driver Interface
Pedal	2	Driver Interface
Pedal mount bracket	2	Driver Interface
Steering wheel & column	1	Steering
Steering shaft joint	2	Steering
Steering tie-rod end	2	Steering
Steering connection end	2	Steering
Steering connection piece	1	Steering
Front tyre	2	Suspension & Wheels
Rear tyre	2	Suspension & Wheels
Front hub	2	Suspension & Wheels
Rear hub	2	Suspension & Wheels
Front rim	2	Suspension & Wheels
Rear rim	2	Suspension & Wheels
Front axle stub	2	Suspension & Wheels

PART NAME	QTY	SUBSYSTEM
Rear axle	1	Suspension & Wheels
Front axle connector	2	Suspension & Wheels
Rear bearing housing	2	Suspension & Wheels
Engine (simplified)	1	Powertrain
Brake calliper	2	Braking System
Brake disc	1	Braking System
Brake disc adapter	1	Braking System
Brake pad	2	Braking System
Brake piston	2	Braking System
Flat plate	2	Braking System

COST ESTIMATE

Production Budget Breakdown

The cost estimate reflects FIA-compliant components and manufacturing processes. All major cost drivers — chassis fabrication, powertrain, suspension, safety hardware, and steering — were costed independently. The engine cost assumes a new four-stroke unit from a recognised supplier (e.g. Rotax), inclusive of clutch and primary drive.

SUBSYSTEM	ESTIMATED COST	NOTES
Chassis (welded steel tube)	**€750**	Compliant with FIA stiffness & safety requirements
Engine (4-stroke, e.g. Rotax)	**€650**	Inclusive of clutch and primary power transmission
Suspension & braking system	**€850**	Rear axle, brake system, rims, tyres
Safety elements	**€400**	Seat harness, bumpers, fuel tank, brake reliability components
Steering, chain, bearings, misc.	**€250**	Steering system, drive chain, fasteners, fittings
TOTAL	**€2,900**	**Project-basis production estimate**

3D MODEL

SolidWorks Renders

The finalised assembly was rendered from two orthographic perspectives to demonstrate the overall layout and visual coherence of the design. Total assembly mass: 102.7 kg.

Tagantvaade

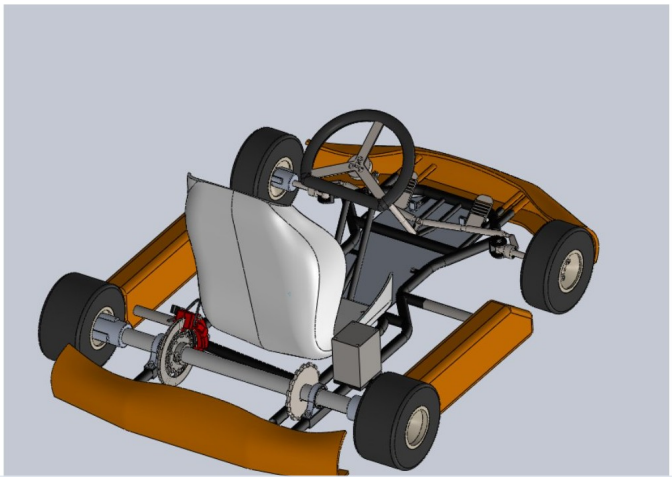

Rear isometric view — drivetrain and brake disc visible

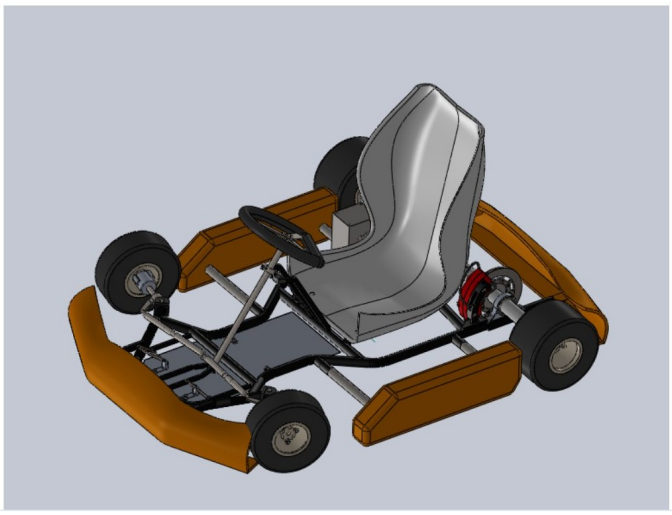

Front isometric view — steering geometry and pedal layout

Full Assembly Drawing

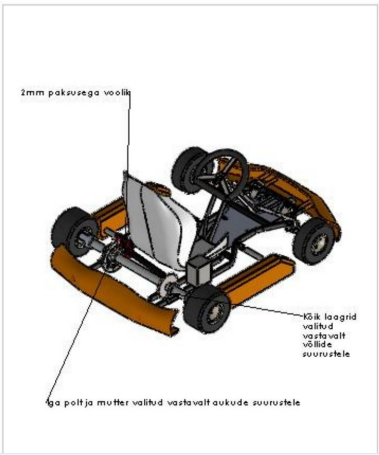

Top-level assembly drawing — all bearings and fasteners sized to shaft/hole dimensions. Total mass: 102.72 kg. Scale 1:13.

ENGINEERING DRAWINGS

Selected Component Drawings

Engineering drawings were produced for all custom-designed components in accordance with ISO 2768-f general tolerancing. The drawings below represent a cross-section of the work produced across all three subsystem owners.

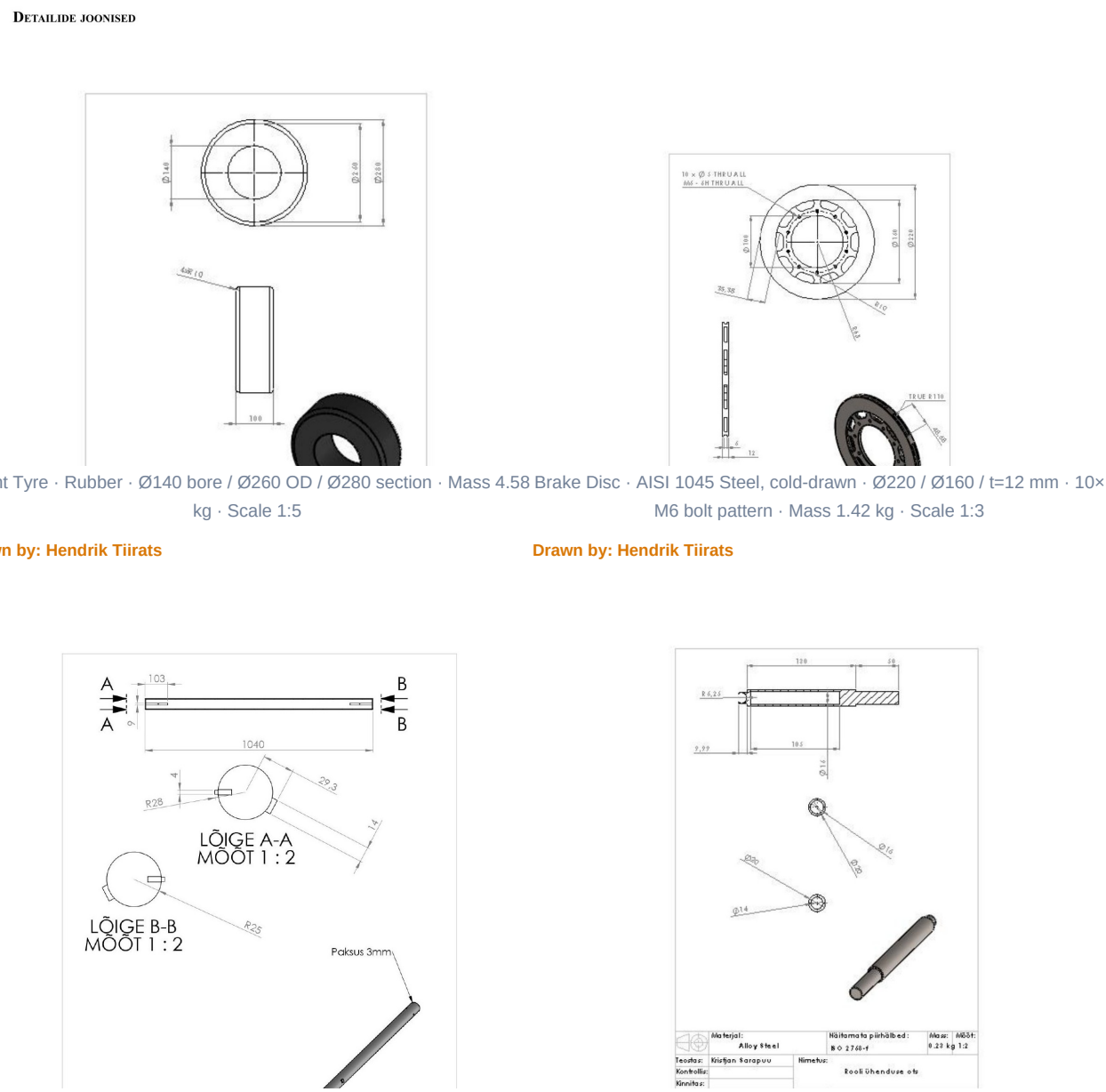

Front Tyre · Rubber · Ø140 bore / Ø260 OD / Ø280 section · Mass 4.58 kg · Scale 1:5

Drawn by: Hendrik Tiirats

Brake Disc · AISI 1045 Steel, cold-drawn · Ø220 / Ø160 / t=12 mm · 10× M6 bolt pattern · Mass 1.42 kg · Scale 1:3

Drawn by: Hendrik Tiirats

Rear Axle · Alloy Steel · L=1040 mm / Ø56 / t=3 mm wall · Mass 3.68 kg · Scale 1:10

Drawn by: Mikk Eke Kalamees

Steering Tie-Rod End · Alloy Steel · L=170 mm / Ø14–Ø20 section · Mass 0.23 kg · Scale 1:2

Drawn by: Kristjan Sarapuu

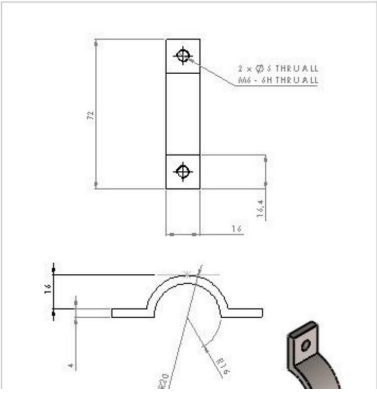

Steering Shaft Clamp · Alloy Steel · 72 mm × 16 mm · 2× M6 THRU ALL · Mass 0.04 kg · Scale 1:1

Drawn by: Kristjan Sarapuu

CONCLUSION

Outcomes & Learning

All project objectives were met. A complete, fully constrained SolidWorks assembly was delivered — encompassing chassis, drivetrain, steering, braking, and body panels — together with ISO-standard engineering drawings and a documented cost model. The assembly is publicly accessible via the 3DExperience platform.

The project deepened the team's understanding of kart architecture and the interdependencies between subsystems — particularly the geometric constraints linking steering geometry, wheel hub sizing, and brake disc fitment. SolidWorks proficiency improved substantially across all members, from basic part modelling to complex assembly management.

A deliberate scope boundary was maintained: structural FEA (finite element analysis) and detailed load calculations were out of scope for this phase. The 3D model provides a solid foundation for future stress analysis, prototype fabrication, or further development of any individual subsystem.

Skills Demonstrated

CAD & Software	SolidWorks part modelling, assembly management, drawing sheet creation, ISO tolerancing
Engineering Design	FIA regulation compliance, design-for-maintainability, system decomposition
Project Management	Work-breakdown structure, responsibility assignment, peer review process
Technical Communication	Engineering drawings to ISO 2768-f, formal report writing, cost estimation

3DEXPERIENCE MODEL	https://r1132103306844-eu1-academia-ifwe.3dexperience.3ds.com/#notification:5ffd0815f179416ebae7ab84ea27c5ac