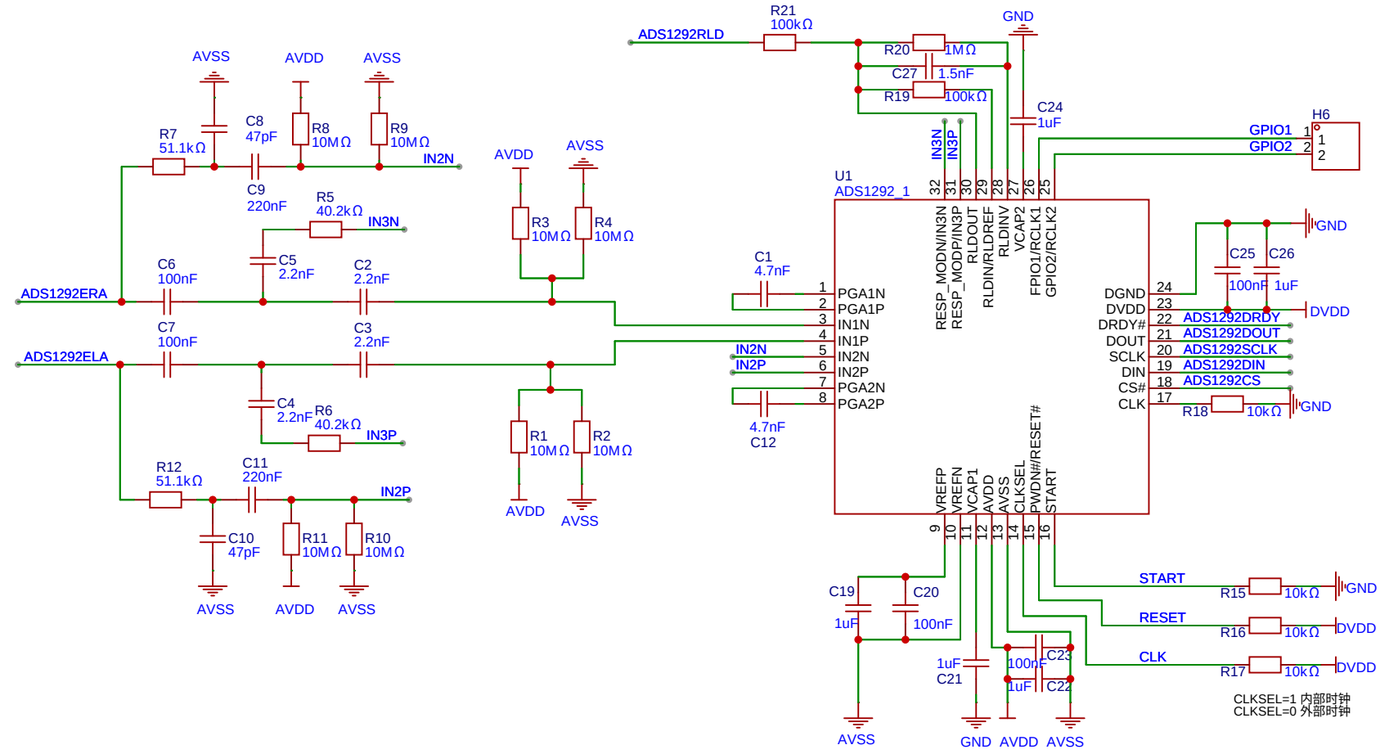

DVDD 数字电源

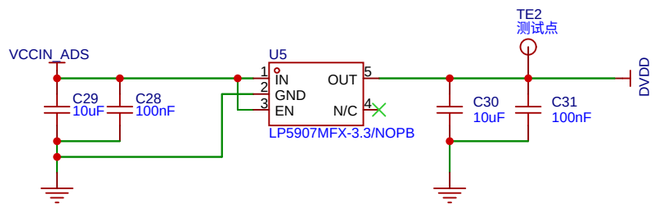

P2254V-11-12P

AVDD 模拟电源

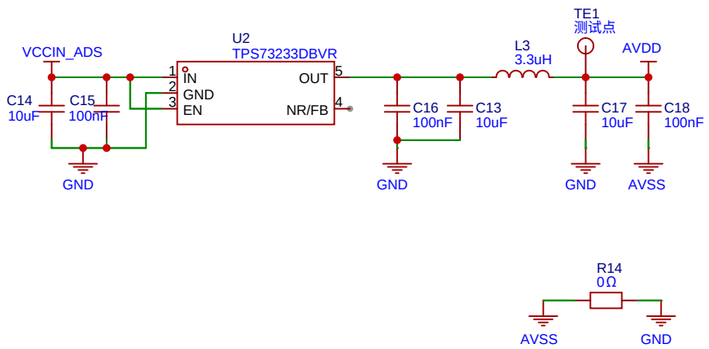

接口

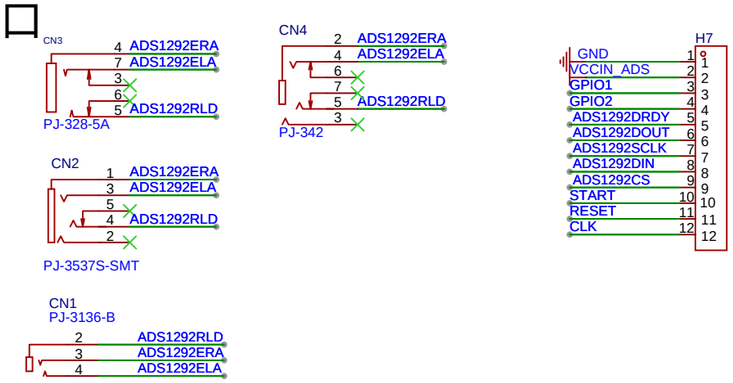

LED

TITLE: ADS1292R-Test	REV: 1.0
Company:	Sheet: 1/1
Date: 2020.10.13 Drawn By: doee	

立创EDA