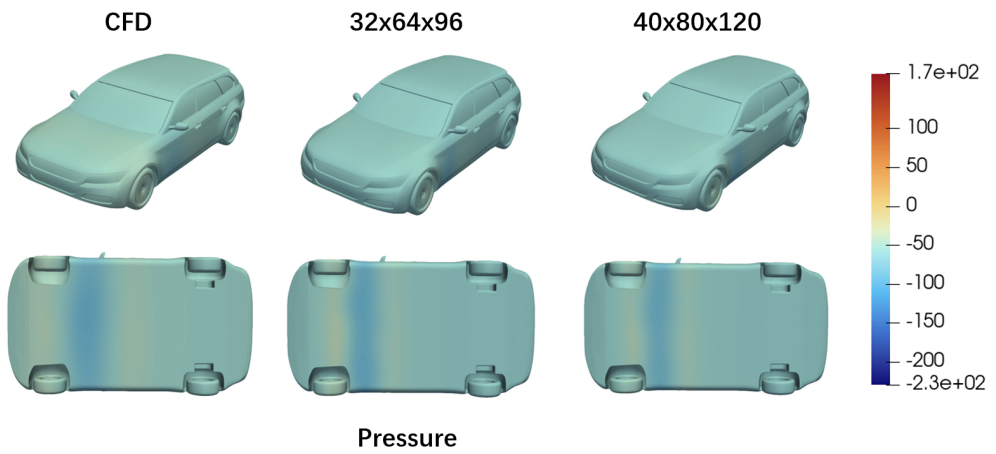

Figure 1:Pressure field comparison on E_S_WWC_WM with a higher-resolution prediction.

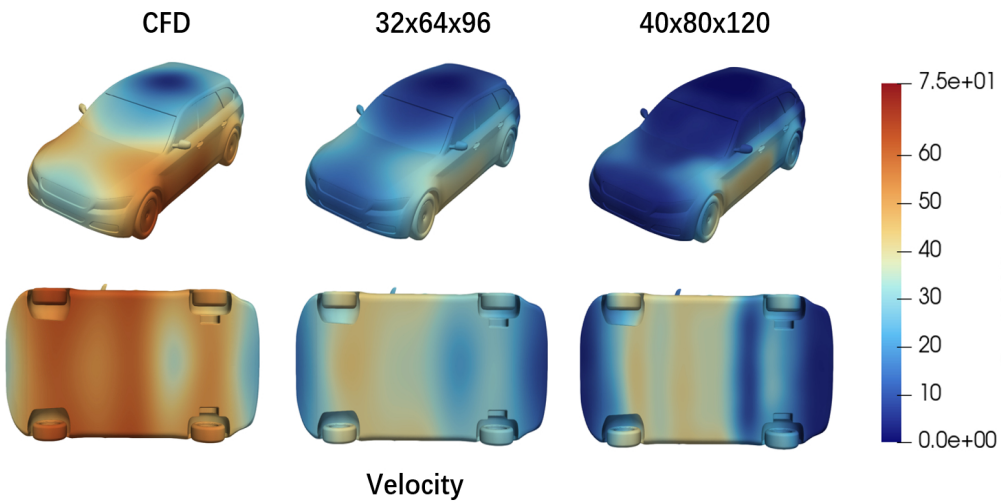

Figure 2:Velocity field comparison on E_S_WWC_WM with a higher-resolution prediction.

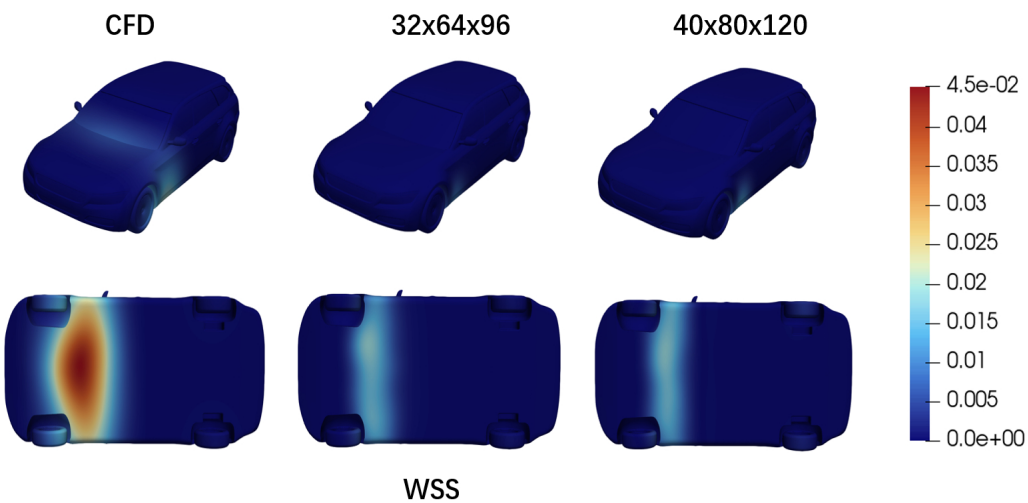

Figure 3:WSS field comparison on E_S_WWC_WM with a higher-resolution prediction.

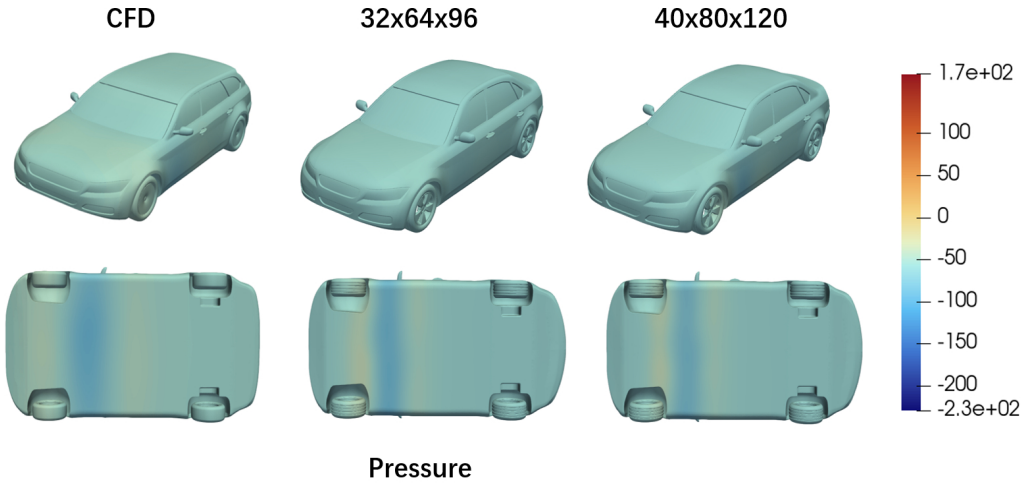

Figure 4:Pressure field comparison on N_S_WW_WM with a higher-resolution prediction.

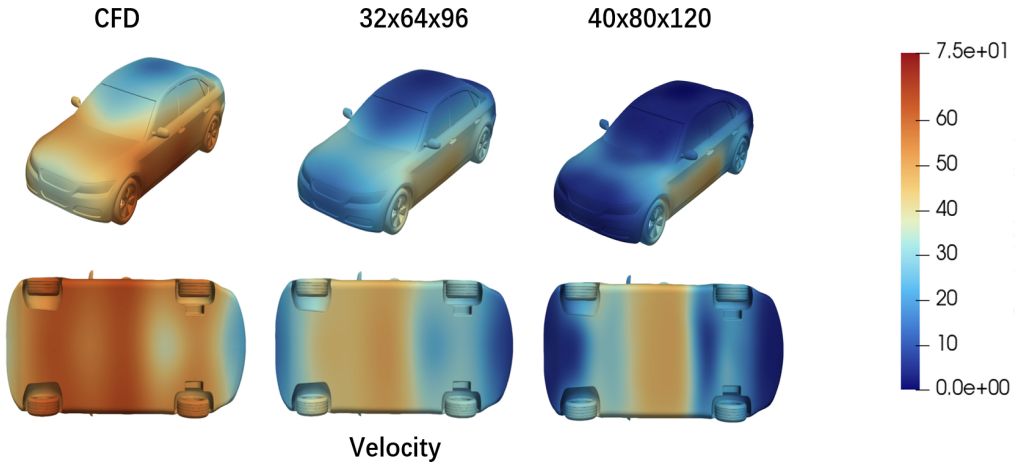

Figure 5:Velocity field comparison on N_S_WW_WM with a higher-resolution prediction.

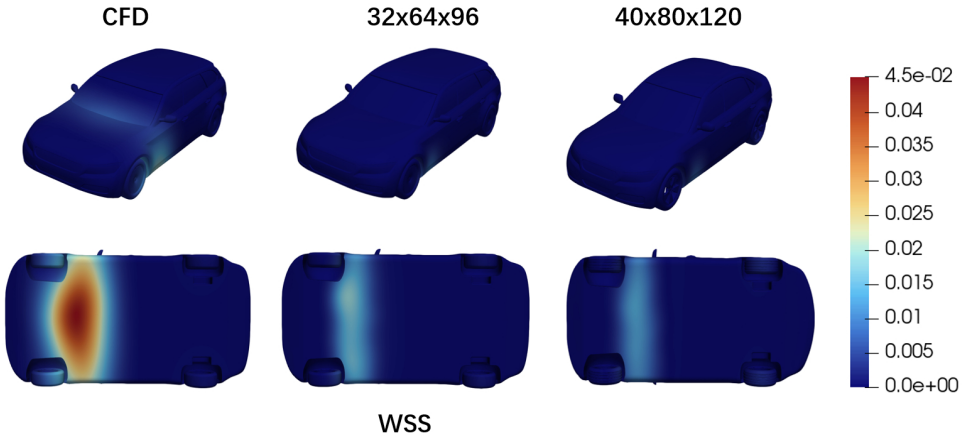

Figure 6:WSS field comparison on N_S_WW_WM with a higher-resolution prediction.