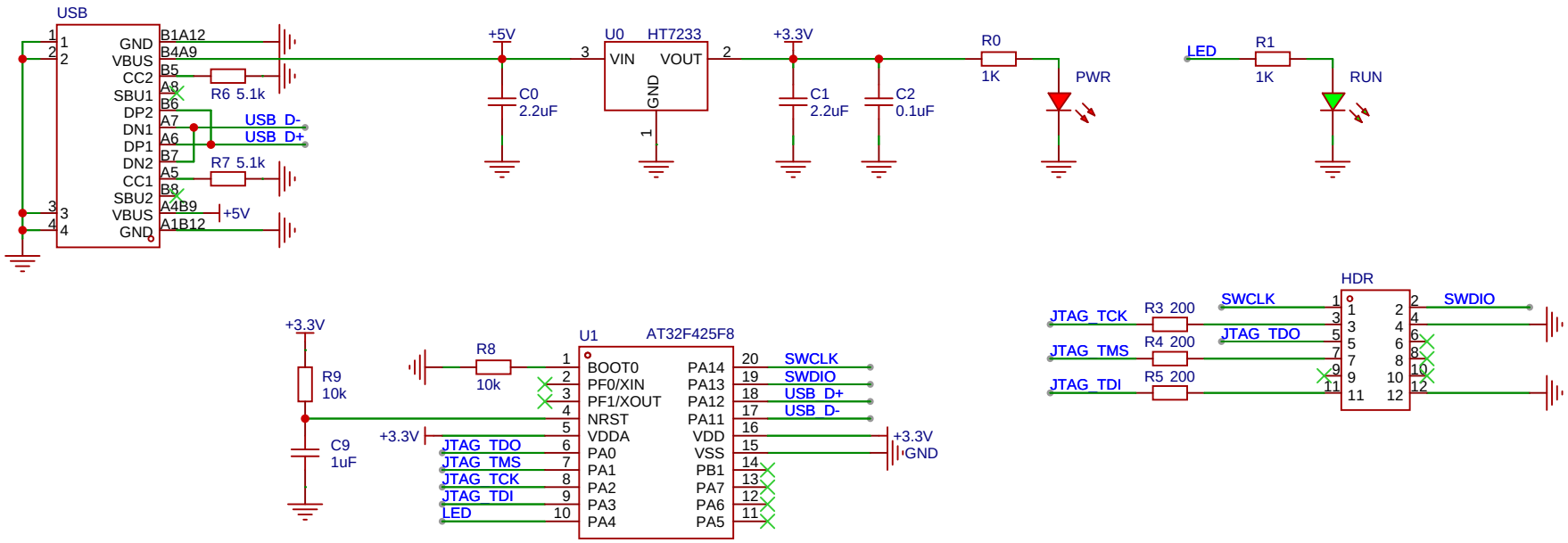

Schematic	Blaster	Update Date	2025-06-08
		Create Date	2022-11-13
Page	Core	Part Number	
Drawed		Blaster	
Reviewed			
		VER	SIZE	PAGE 1 OF 1
嘉立创EDA		V1.0	A4	嘉立创EDA