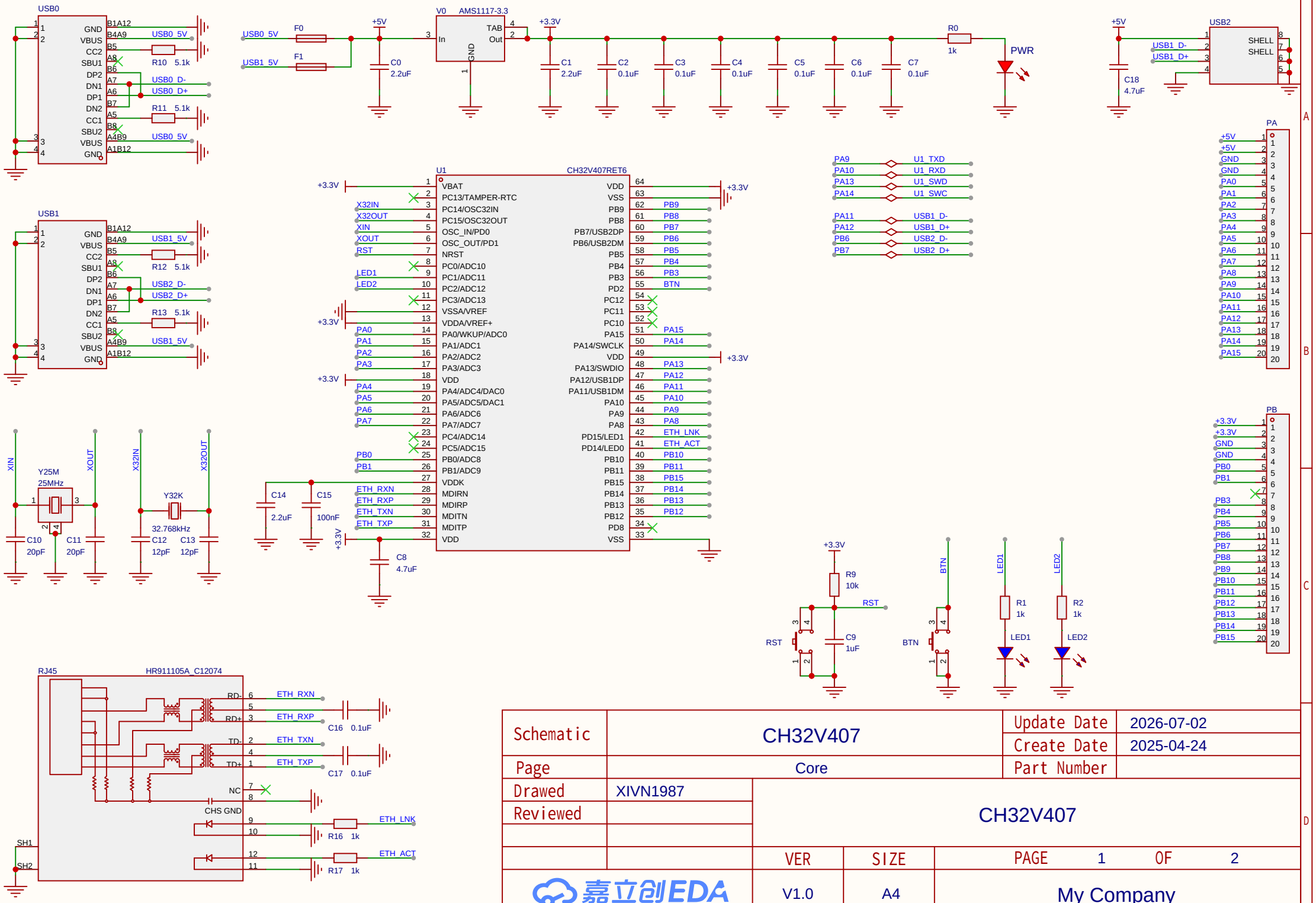
USB0
USB1
USB2
V0 AMS1117-3.3
U1 CH32V407RET6
RJ45 HR911105A_C12074
Y25M 25MHz
Y32K 32.768kHz
PA
PB
PWR
RST
BTN
LED1
LED2
Schematic CH32V407
Page Core
Drawed XIVN1987
Reviewed
Update Date 2026-07-02
Create Date 2025-04-24
Part Number
CH32V407
VER V1.0
SIZE A4
PAGE 1 OF 2
My Company

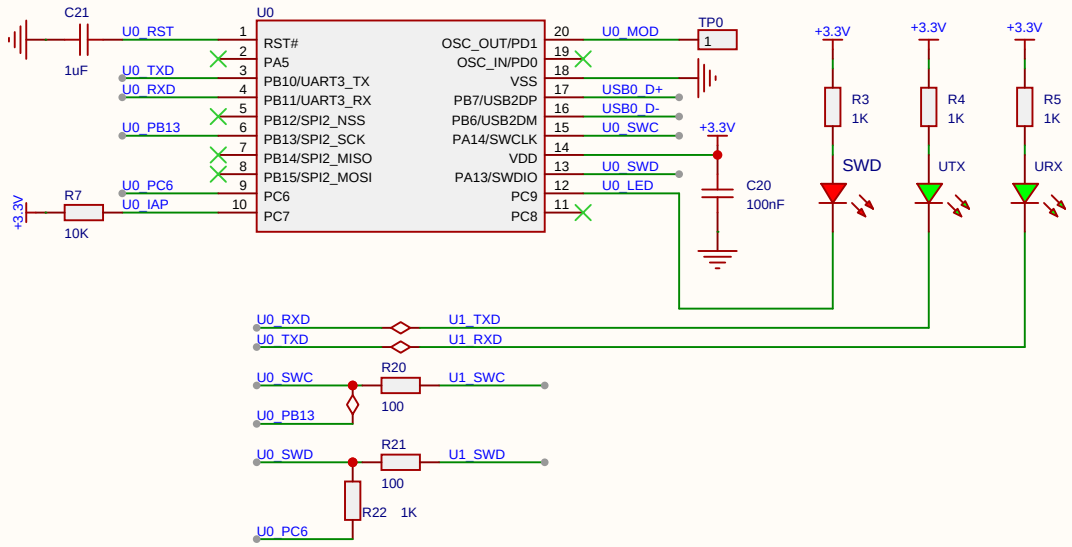

原理图	CH32V407	创建日期	2026-06-19
		更新日期	2026-07-01
板子	CH32V407	图页	LinkE
绘制		CH32V407	
审阅			
		版本	尺寸	页 2 共 2
嘉立创EDA		V1.0	A4	嘉立创EDA