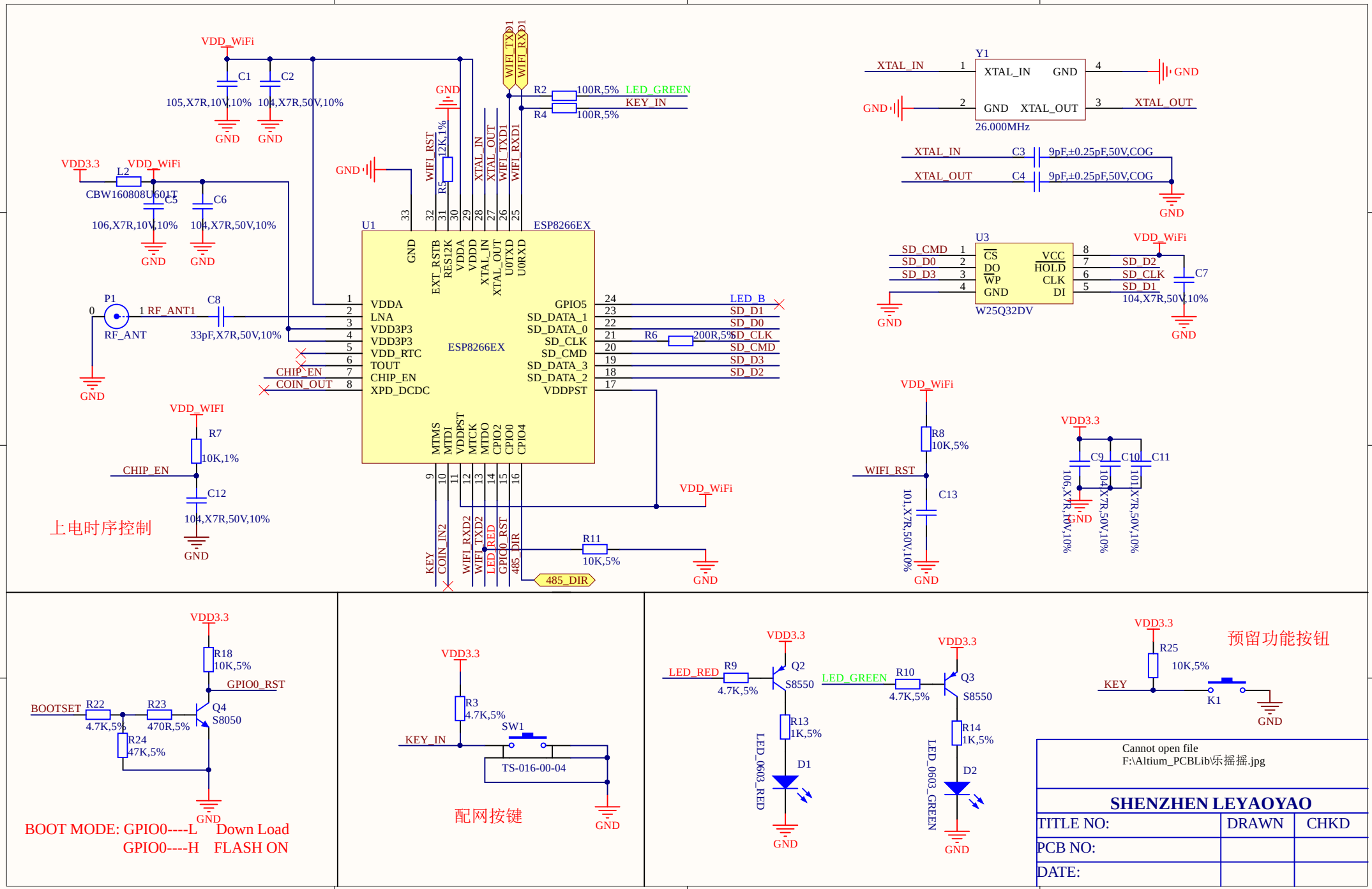
VDD_WiFi
C1
C2
105,X7R,10V,10%
104,X7R,50V,10%
GND
WIFI_TXD1
WIFI_RXD1
R2
100R,5%
LED_GREEN
KEY_IN
R4
100R,5%
Y1
XTAL_IN
GND
XTAL_OUT
26.000MHz
C3
9pF,±0.25pF,50V,COG
C4
9pF,±0.25pF,50V,COG
VDD3.3
L2
CBW160808U601T
C5
C6
106,X7R,10V,10%
104,X7R,50V,10%
WIFI_RST
R5
12K,1%
U1
ESP8266EX
VDDA
LNA
VDD3P3
VDD_RTC
TOUT
CHIP_EN
XPD_DCDC
GPIO5
SD_DATA_1
SD_DATA_0
SD_CLK
SD_CMD
SD_DATA_3
SD_DATA_2
VDDPST
MTMS
MTDI
MTCK
MTDO
CPIO2
CPIO0
CPIO4
EXT_RSTB
RES12K
U0TXD
U0RXD
P1
RF_ANT
RF_ANT1
C8
33pF,X7R,50V,10%
LED_B
SD_D1
SD_D0
R6
200R,5%
SD_CLK
SD_CMD
SD_D3
SD_D2
CHIP_EN
COIN_OUT
U3
SD_CMD
SD_D0
SD_D3
CS
DO
WP
GND
VCC
HOLD
CLK
DI
W25Q32DV
SD_D2
SD_CLK
SD_D1
C7
104,X7R,50V,10%
VDD_WIFI
R7
10K,1%
C12
104,X7R,50V,10%
上电时序控制
KEY
COIN_IN2
WIFI_RXD2
WIFI_TXD2
LED_RED
GPIO0_RST
485_DIR
R11
10K,5%
R8
10K,5%
C13
101,X7R,50V,10%
C9
C10
C11
106,X7R,10V,10%
104,X7R,50V,10%
101,X7R,50V,10%
R18
10K,5%
BOOTSET
R22
4.7K,5%
R23
470R,5%
R24
47K,5%
Q4
S8050
BOOT MODE: GPIO0----L Down Load
GPIO0----H FLASH ON
R3
4.7K,5%
SW1
TS-016-00-04
配网按键
LED_RED
R9
4.7K,5%
Q2
S8550
R13
1K,5%
D1
LED_0603_RED
LED_GREEN
R10
4.7K,5%
Q3
S8550
R14
1K,5%
D2
LED_0603_GREEN
R25
10K,5%
KEY
K1
预留功能按钮
Cannot open file
F:\Altium_PCBLib\乐摇摇.jpg
SHENZHEN LEYAOYAO
TITLE NO:
DRAWN
CHKD
PCB NO:
DATE:

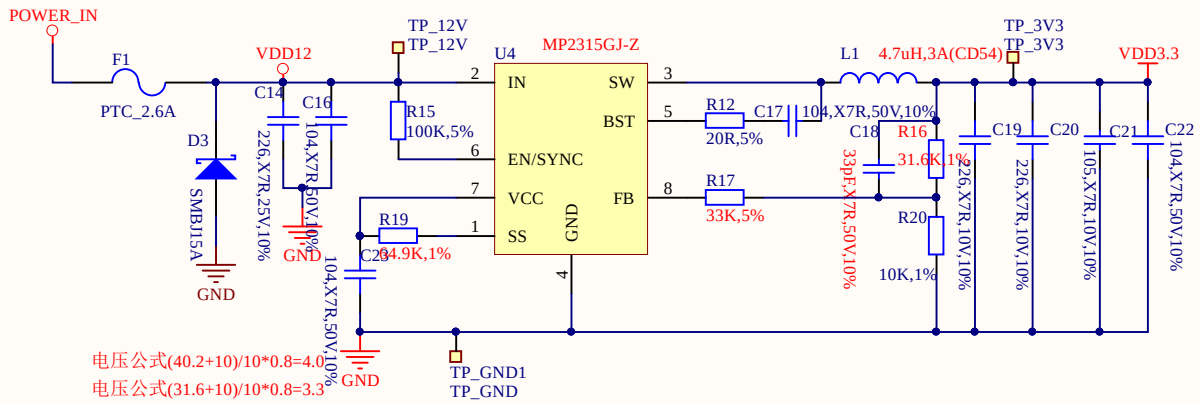

2G/WIFI电源

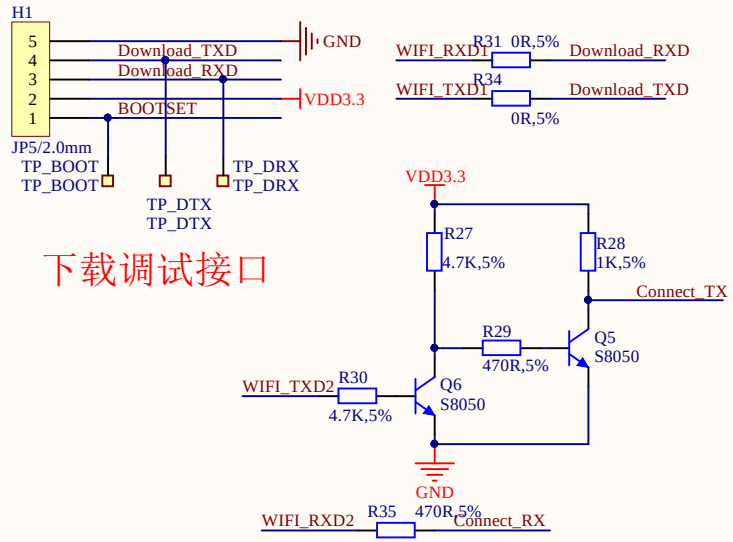

下载调试接口

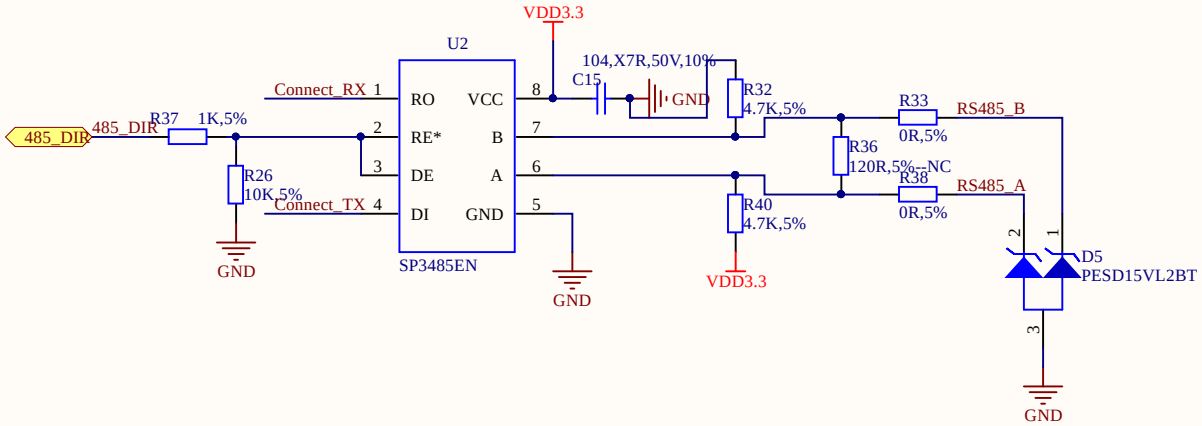

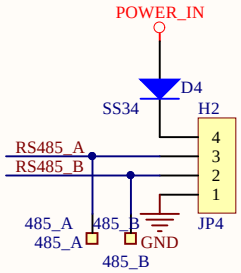

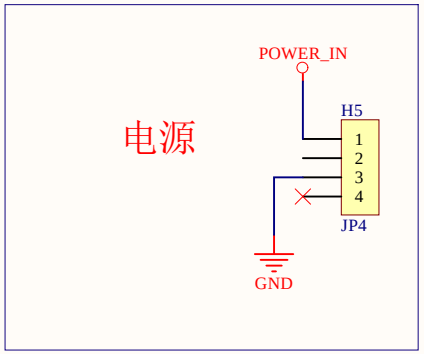

Cannot open file
F:\Altium_PCBLib\乐摇摇.jpg

SHENZHEN LEYAOYAO		
TITLE NO:	DRAWN	CHKD
PCB NO:		
DATE:		

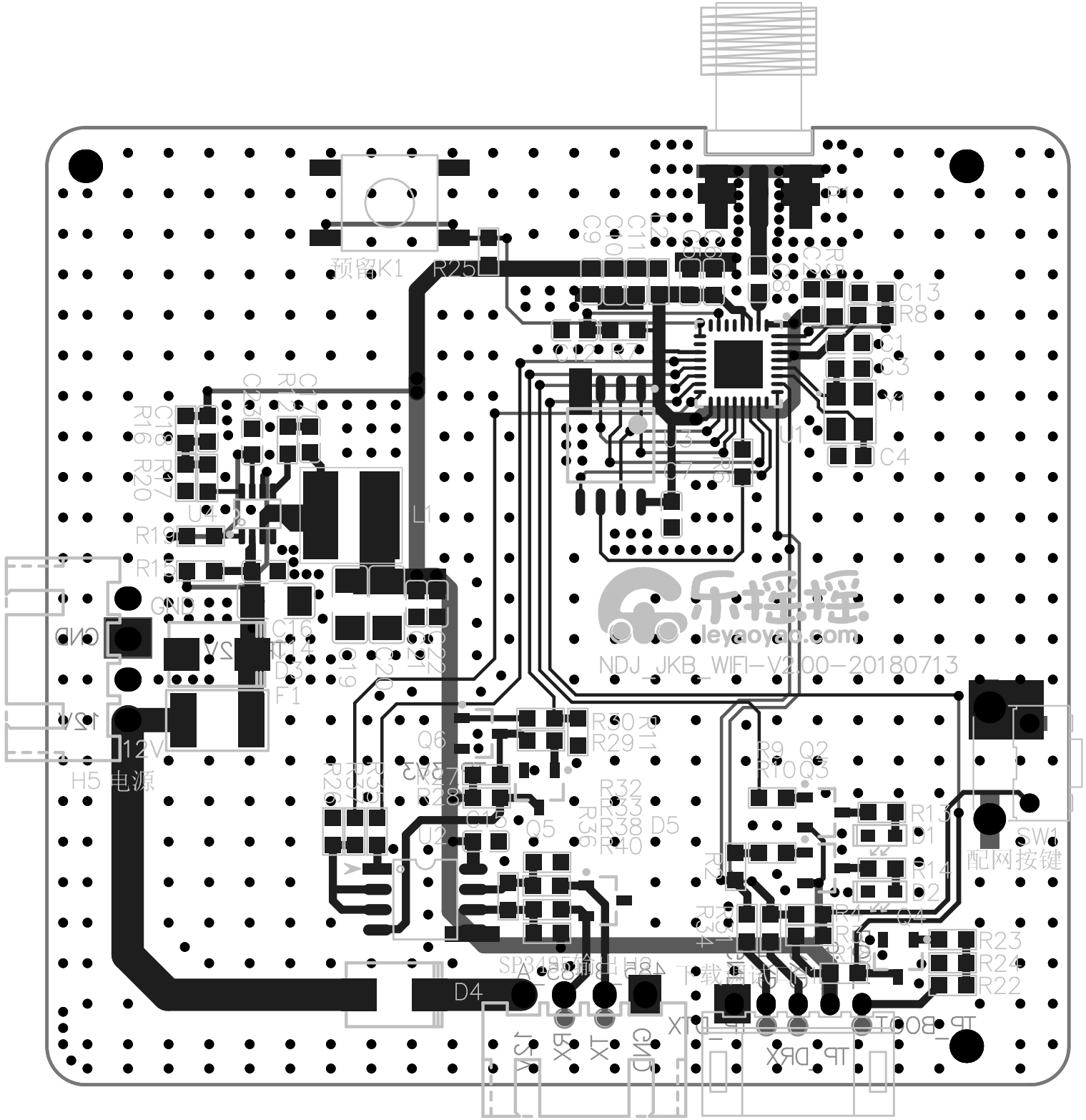
预留K1
R25
C13
R8
C1
C3
C4
U1
L1
U4
R19
R15
GND
12V
H5 电源
D3
F1
Q6
R27
R28
U2
Q5
R30
R29
R32
R33
R38
D5
R40
R9
Q2
R10
Q3
R13
D1
R14
D2
SW1
配网按键
R23
R24
R22
D4
SP3485输出电压
下载固件时
TP_BOOT
TP_DRX
TP_DTX
5V
RX
TX
GND
NDJ_JKB_WIFI-V2.00-20180713
leyaoyao.com