Introduction to VLSI Design

Lecture 10 Sequential Circuit Design

Zhuo Feng

Outline

- Sequencing
- Sequencing Element Design
- Max and Min-Delay
- Clock Skew

Sequencing

- ***Combinational logic***
  - output depends on current inputs
- ***Sequential logic***
  - output depends on current and previous inputs
  - Requires separating previous, current, future
  - Called *state* or *tokens*
  - Ex: FSM, pipeline

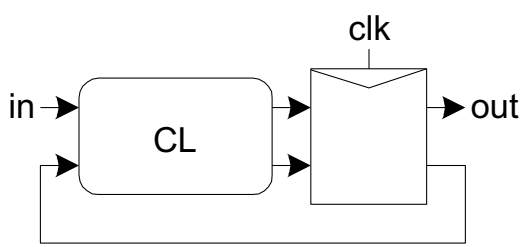

Finite State Machine

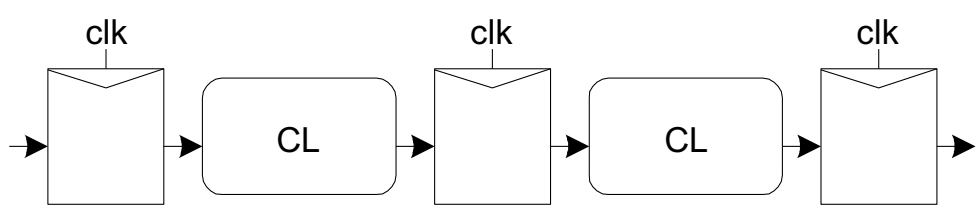

Pipeline

Sequencing Cont.

- **If tokens moved through pipeline at constant speed, no sequencing elements would be necessary**
- **Ex: fiber-optic cable**
  - Light pulses (tokens) are sent down cable
  - Next pulse sent before first reaches end of cable
  - No need for hardware to separate pulses
  - But *dispersion* sets min time between pulses
- **This is called *wave pipelining* in circuits**
- **In most circuits, dispersion is high**
  - Delay fast tokens so they don't catch slow ones.

Sequencing Overhead

- **Use flip-flops to delay fast tokens so they move through exactly one stage each cycle.**
- **Inevitably adds some delay to the slow tokens**
- **Makes circuit slower than just the logic delay**
  - Called sequencing overhead
- **Some people call this clocking overhead**
  - But it applies to asynchronous circuits too
  - Inevitable side effect of maintaining sequence

Sequencing Elements

- **Latch: Level sensitive**
  - a.k.a. transparent latch, D latch
- **Flip-flop: edge triggered**
  - A.k.a. master-slave flip-flop, D flip-flop, D register
- **Timing Diagrams**
  - Transparent
  - Opaque
  - Edge-trigger

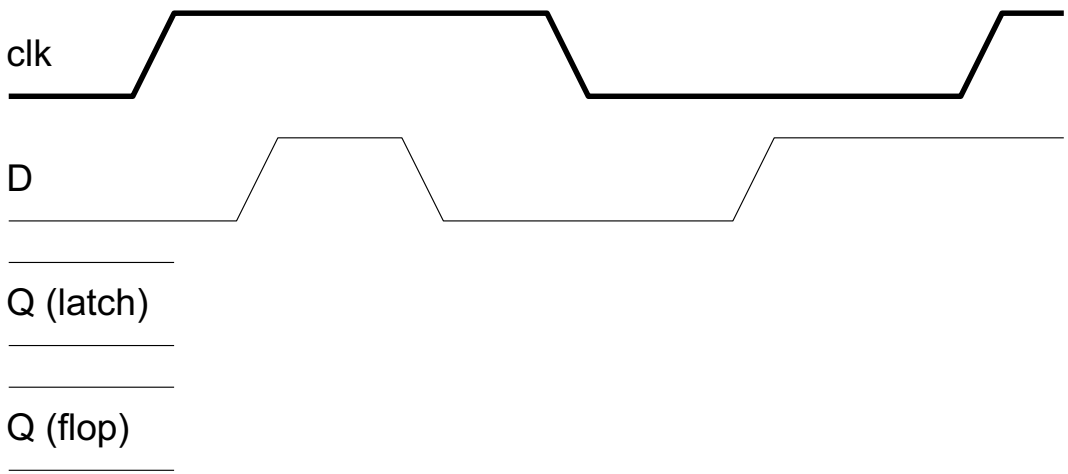

Sequencing Elements

- **Latch: Level sensitive**
  - a.k.a. transparent latch, D latch
- **Flip-flop: edge triggered**
  - A.k.a. master-slave flip-flop, D flip-flop, D register
- **Timing Diagrams**
  - Transparent
  - Opaque
  - Edge-trigger

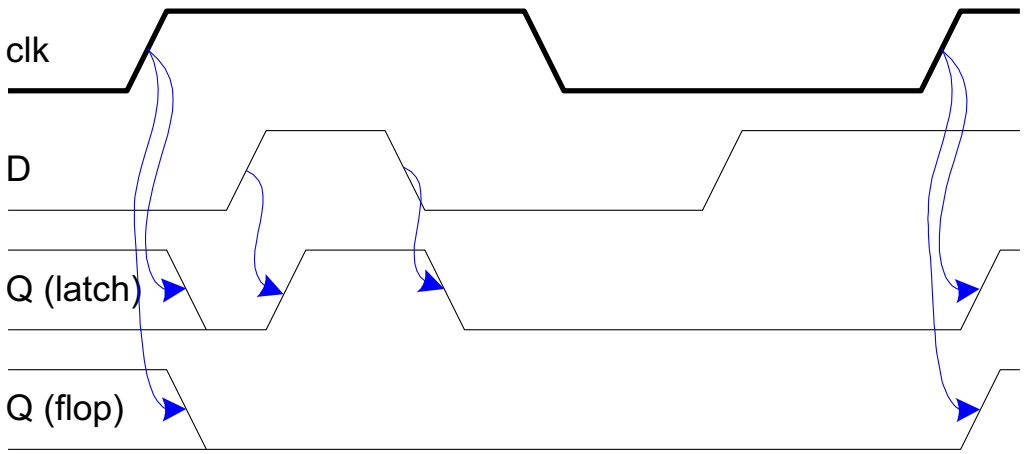

Latch Design

- **Pass Transistor Latch**
- **Pros**
  - + Tiny
  - + Low clock load
- **Cons**
  - ► V_t drop
  - ► nonrestoring
  - ► backdriving
  - ► output noise sensitivity
  - ► dynamic
  - ► diffusion input

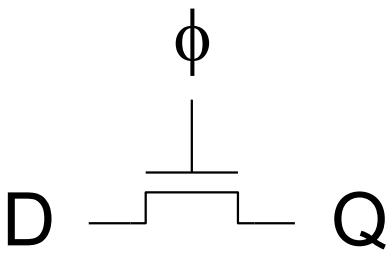

Used in 1970's

Latch Design

- **Transmission gate**
  - + No V_t drop
  - - Requires inverted clock

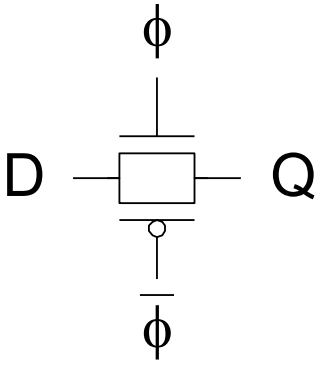

Latch Design

- **Inverting buffer**
  - + Restoring
  - + No backdriving
  - + Fixes either
    - ▼ Output noise sensitivity
    - ▼ Or diffusion input
  - ► Inverted output

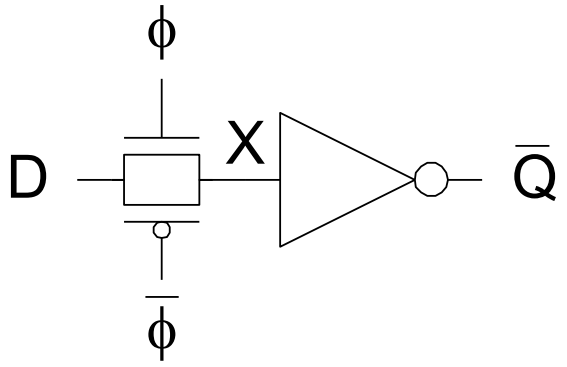

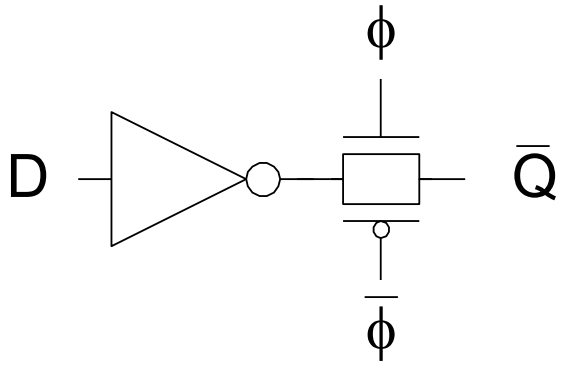

Latch Design

- **Tristate feedback**
  - + Static
  - ► Backdriving risk

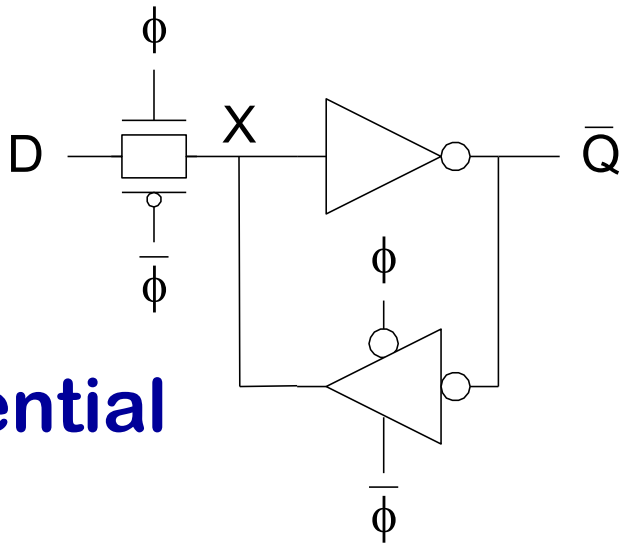

- **Static latches are now essential**

Latch Design

- **Buffered input**
  - + Fixes diffusion input
  - + Noninverting

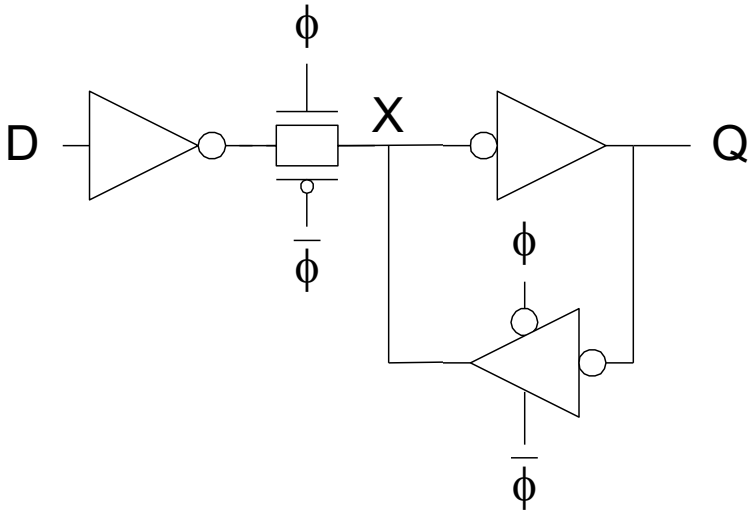

Latch Design

- **Buffered output**
  - + No backdriving

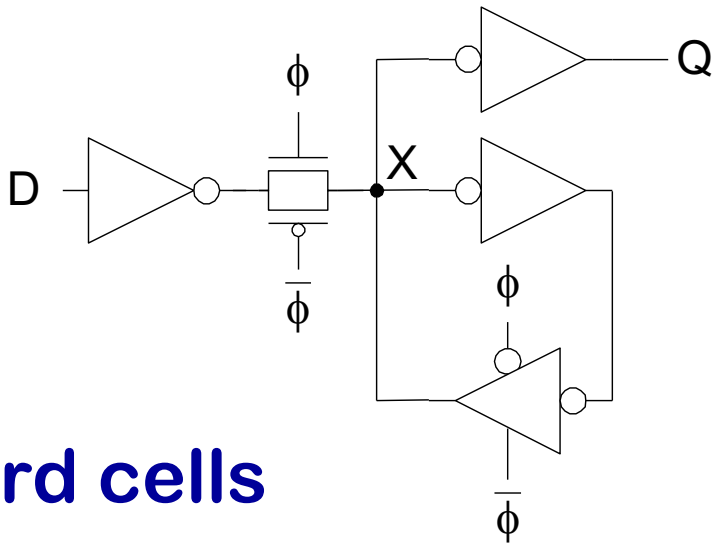

- **Widely used in standard cells**
  - + Very robust (most important)
  - - Rather large
  - - Rather slow (1.5 – 2 FO4 delays)
  - - High clock loading

Latch Design

- **Datapath latch**
  - \+ Smaller, faster
  - \- unbuffered input

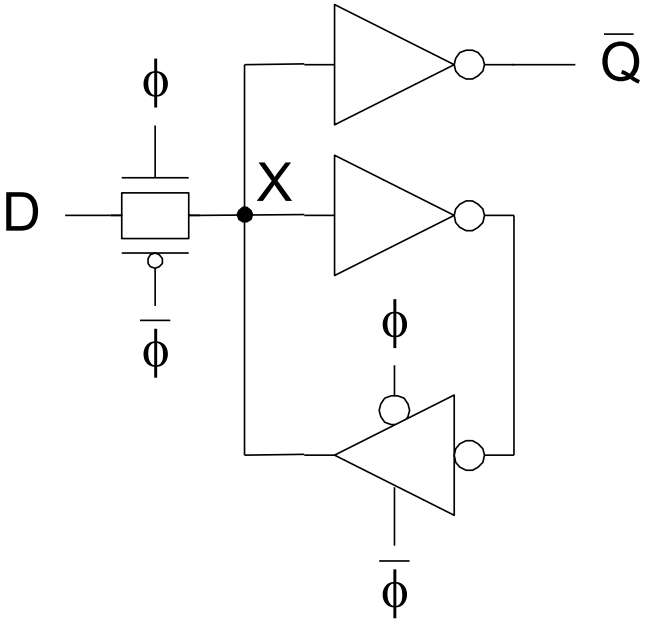

Flip-Flop Design

- **Flip-flop is built as pair of back-to-back latches**

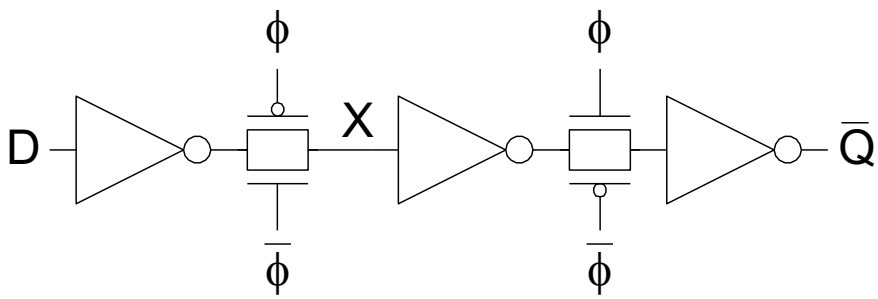

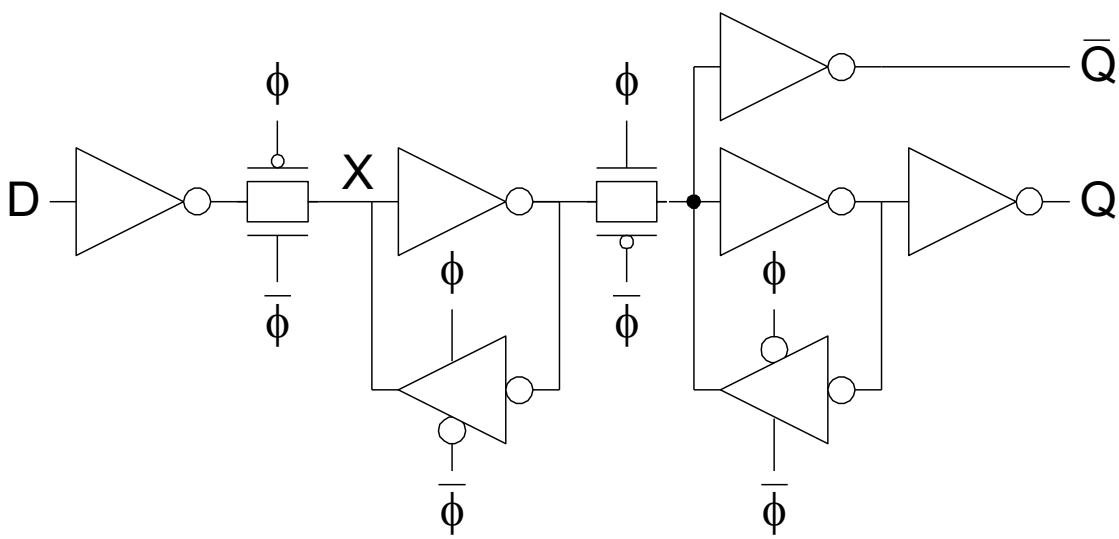

Sequencing Methods

- Flip-flops
- 2-Phase Latches
- Pulsed Latches

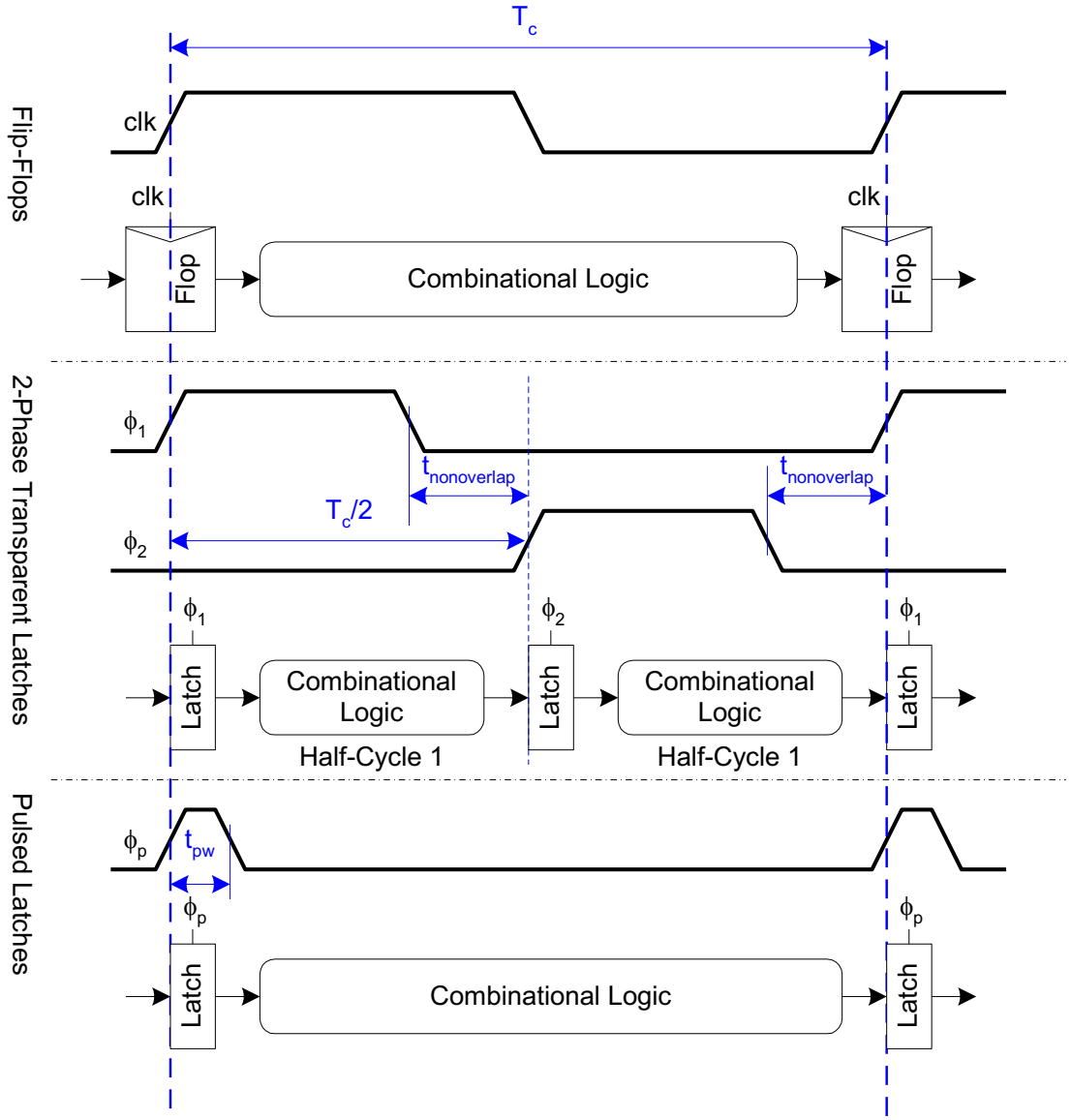

Timing Diagrams

Contamination and Propagation Delays

t_{pd}	Logic Prop. Delay
t_{cd}	Logic Cont. Delay
t_{pcq}	Latch/Flop Clk-Q Prop Delay
t_{ccq}	Latch/Flop Clk-Q Cont. Delay
t_{pdq}	Latch D-Q Prop Delay
t_{pcq}	Latch D-Q Cont. Delay
t_{setup}	Latch/Flop Setup Time
t_{hold}	Latch/Flop Hold Time

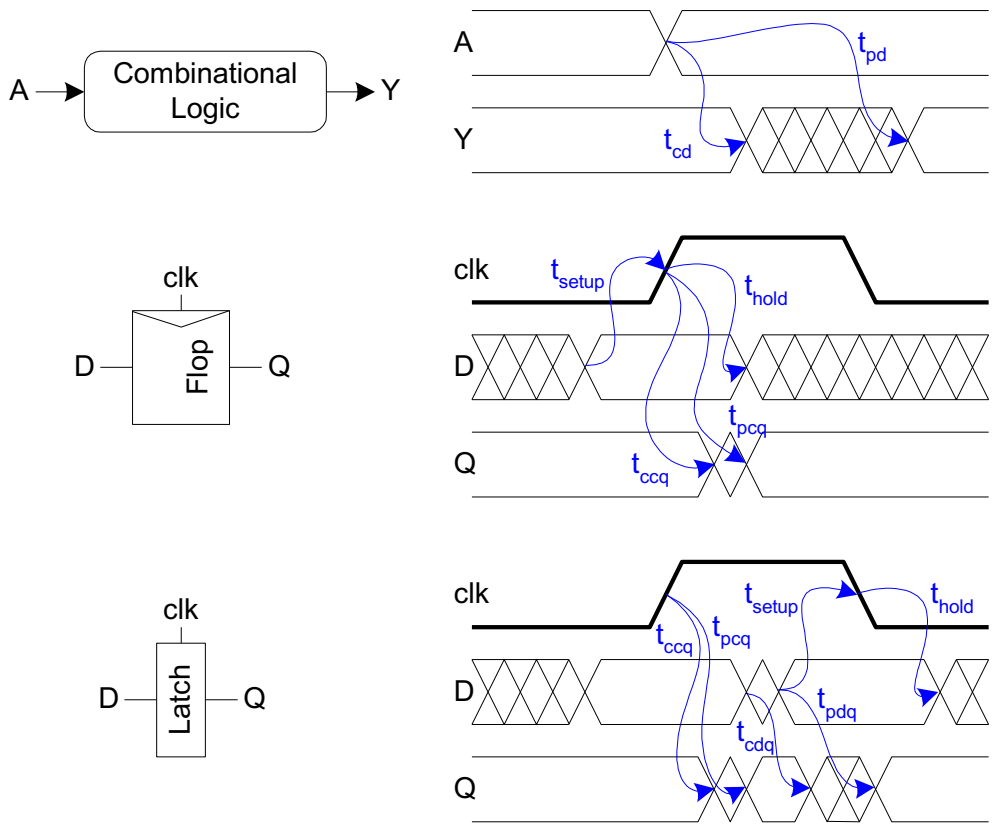

Max-Delay: Flip-Flops

$$t_{pd} \le T_c - \underbrace{\left(t_{\text{setup}} + t_{pcq}\right)}_{\text{sequencing overhead}}$$

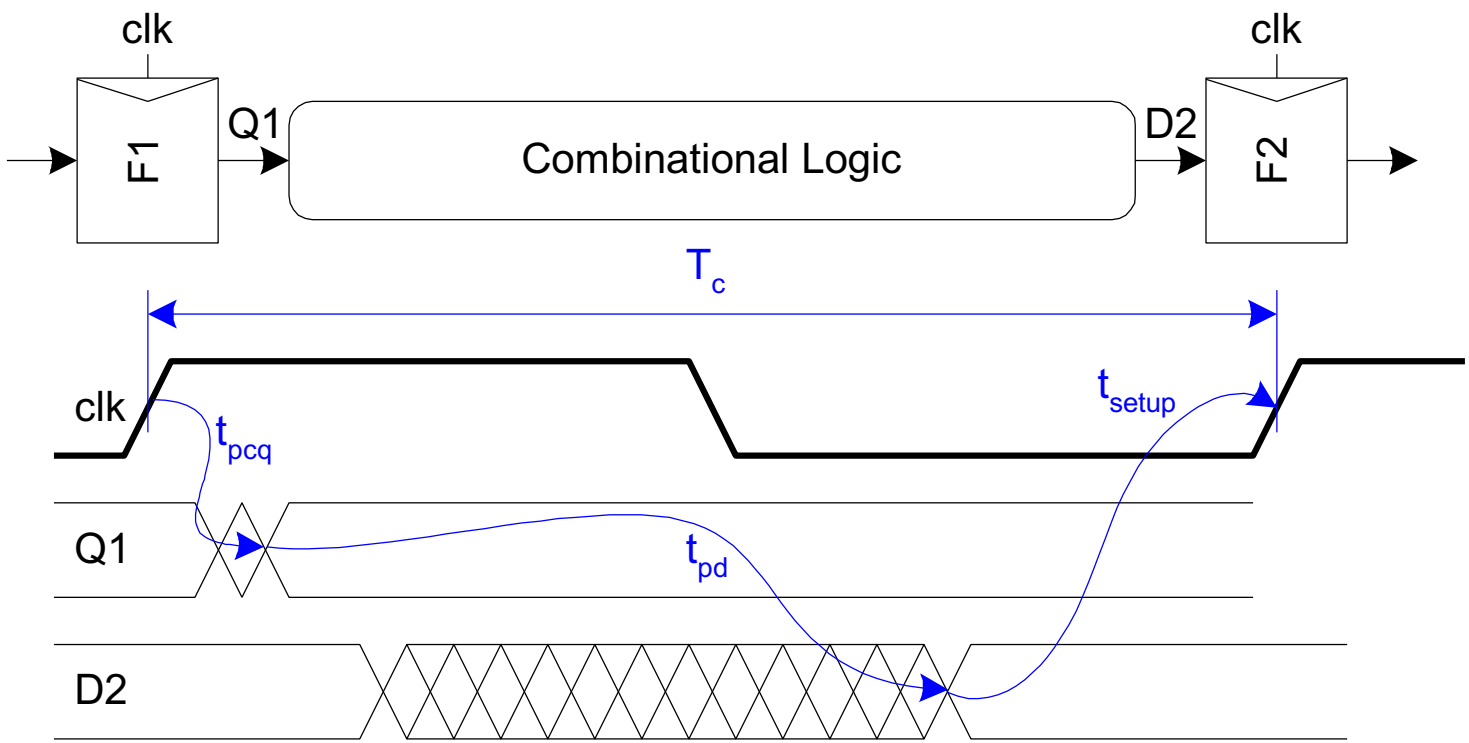

Min-Delay: Flip-Flops

$$t_{cd} \geq t_{\text{hold}} - t_{ccq}$$

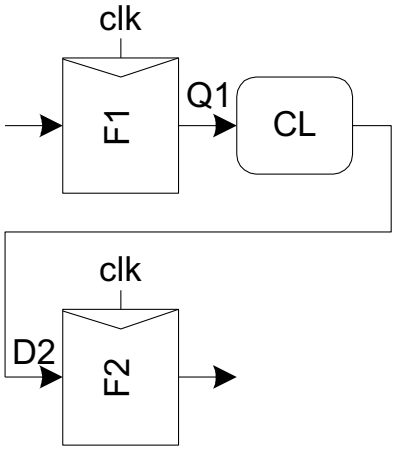

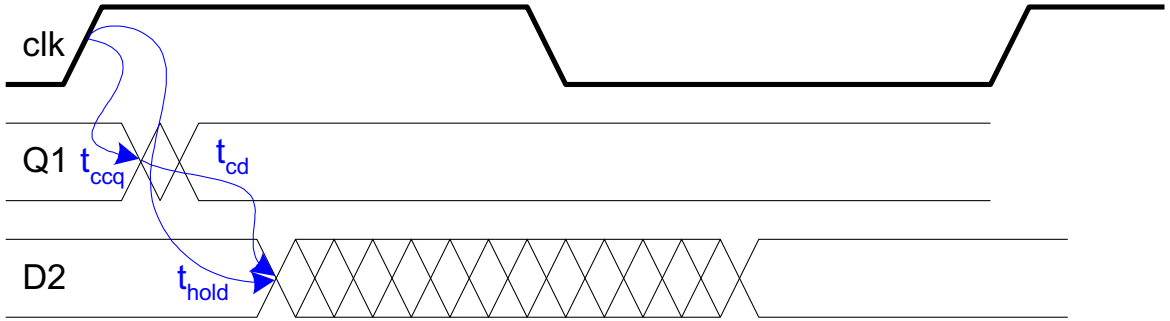

Clock Skew

- **We have assumed zero clock skew**
- **Two types of clock skews:**
  - **Negative skew:** sending register receives the clock earlier than the receiving register
  - **Positive skew**: receiving register gets the clock earlier than the sending register.

- **Clocks really have uncertainty in arrival time**
  - Decreases maximum propagation delay
  - Increases minimum contamination delay

Skew: Flip-Flops

$$t_{pd} \le T_c - \underbrace{\left(t_{pcq} + t_{\text{setup}} + t_{\text{skew}}\right)}_{\text{sequencing overhead}}$$
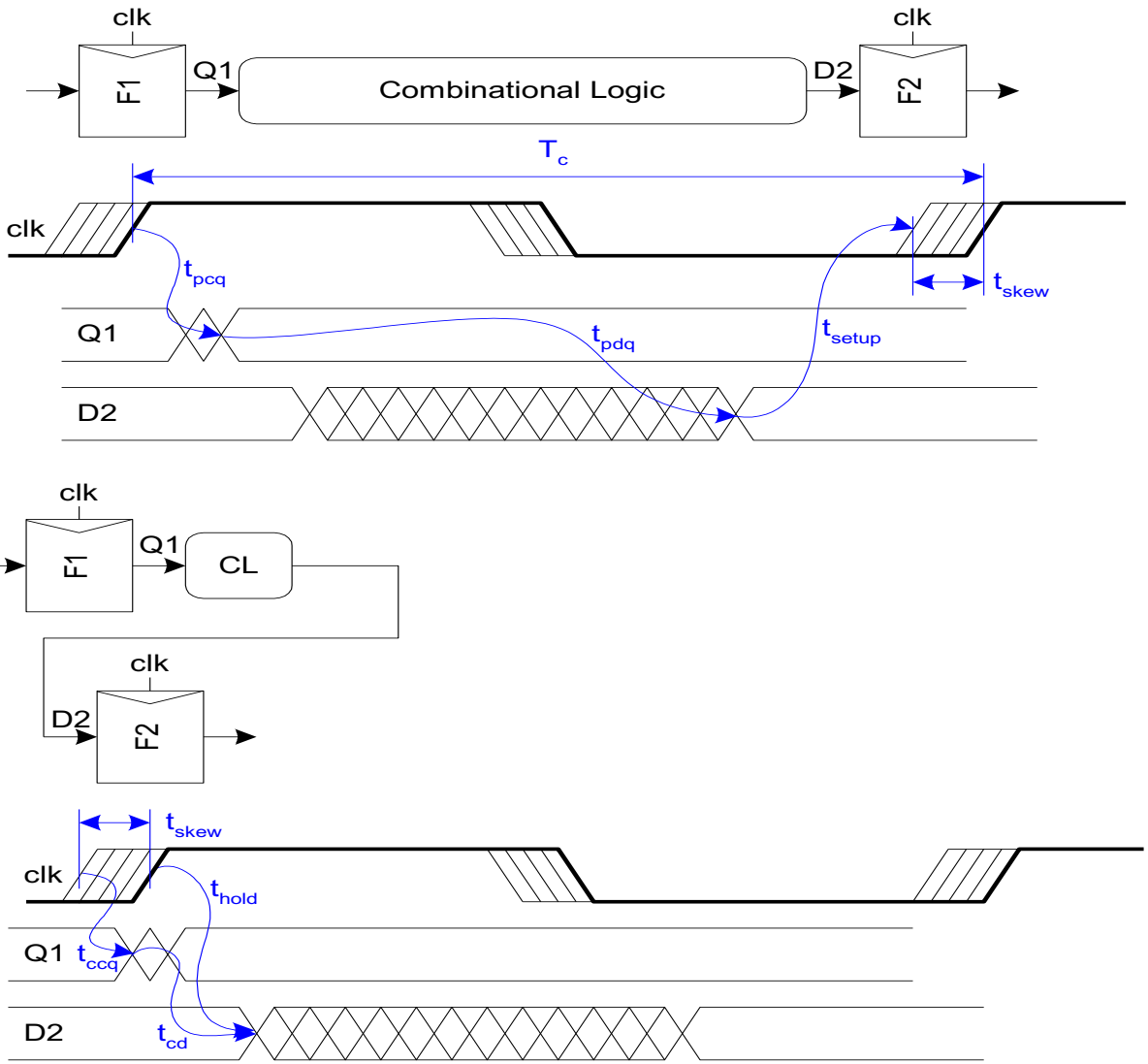
$$t_{cd} \ge t_{\text{hold}} - t_{ccq} + t_{\text{skew}}$$