Introduction to VLSI Design

Lecture 11 SRAM

Zhuo Feng

Outline

- **Memory Arrays**
- **SRAM Architecture**
  - SRAM Cell
  - Decoders
  - Column Circuitry

Memory Arrays

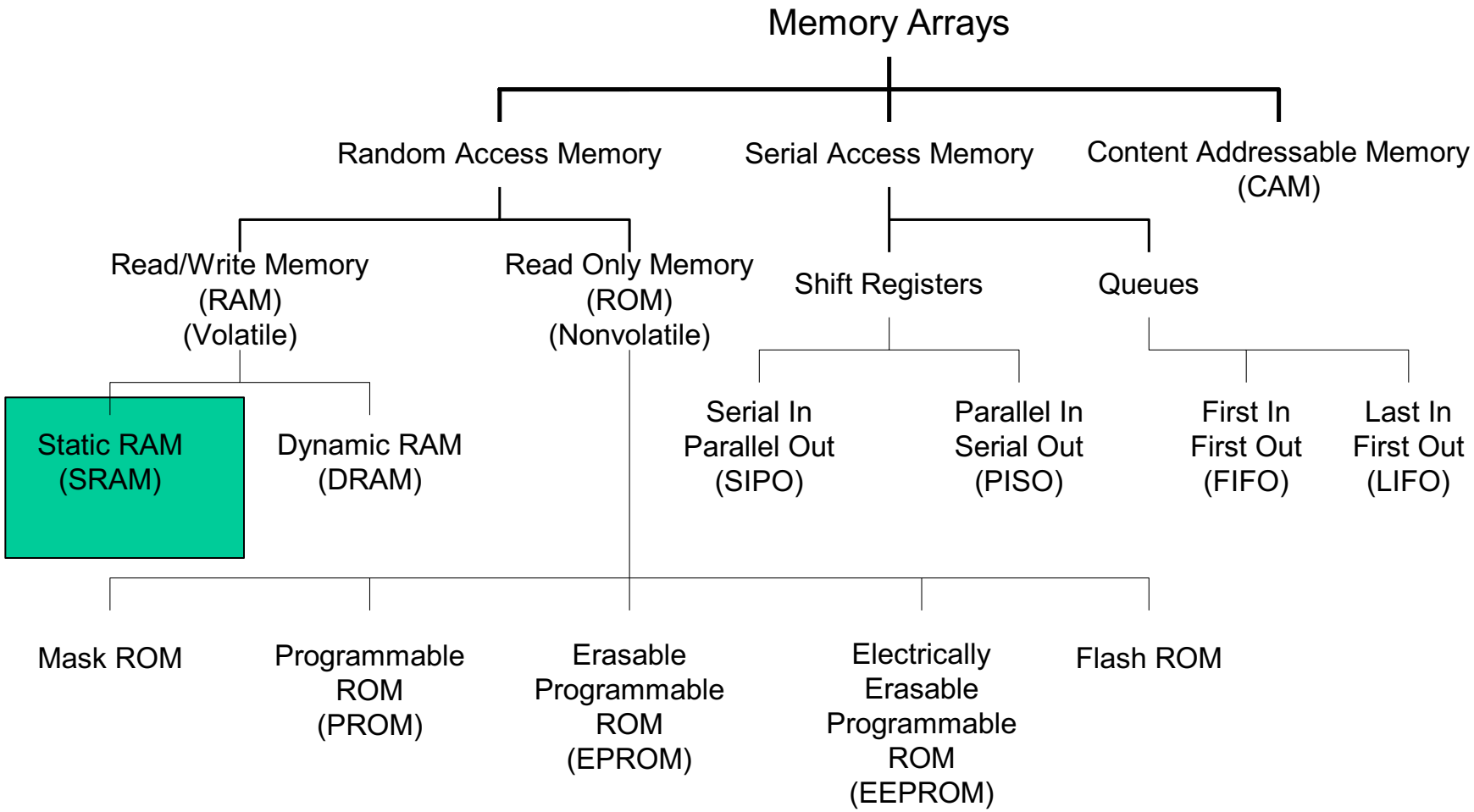

Array Architecture

- 2^n *words* of 2^m *bits* each
- If n >> m, fold by 2^k into fewer *rows* of more *columns*

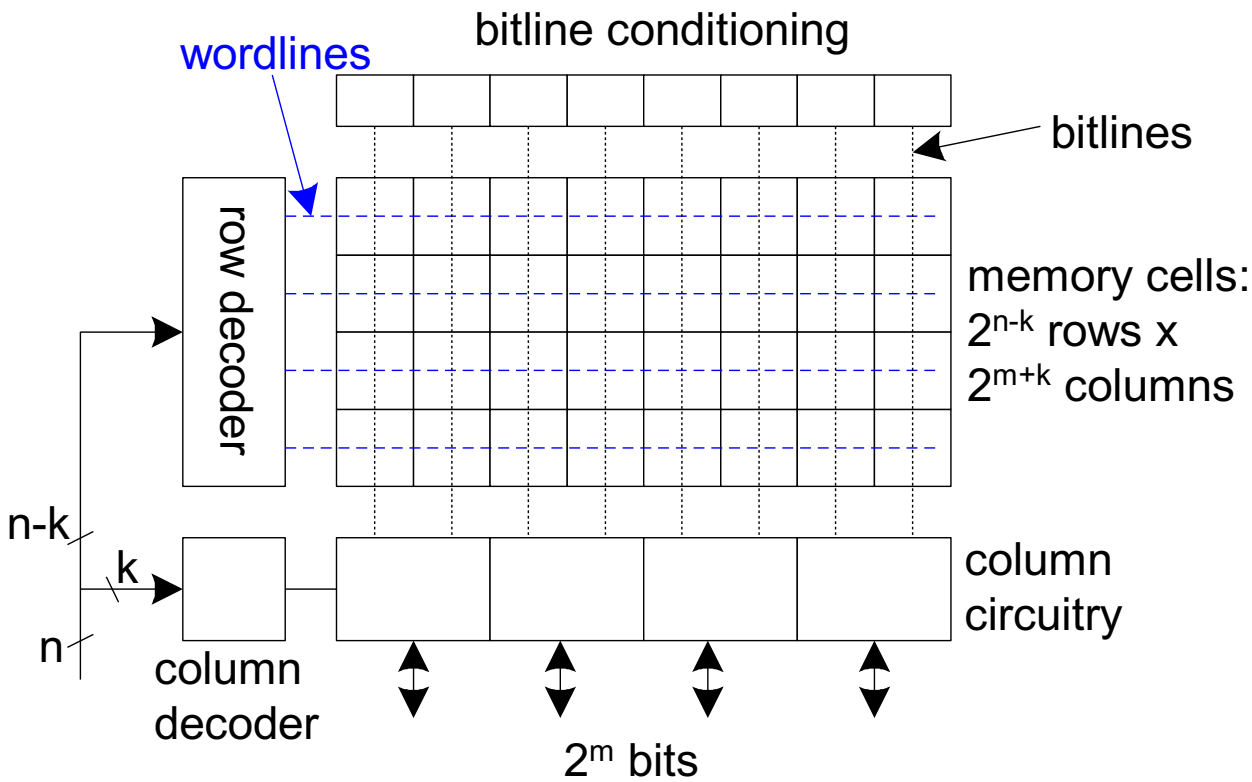

- Good regularity – easy to design
- Very high density if good cells are used

12T SRAM Cell

- **Basic building block: SRAM Cell**
  - Holds one bit of information, like a latch
  - Must be read and written
- **12-transistor (12T) SRAM cell**
  - Use a simple latch connected to bitline
  - 46 x 75 λ unit cell

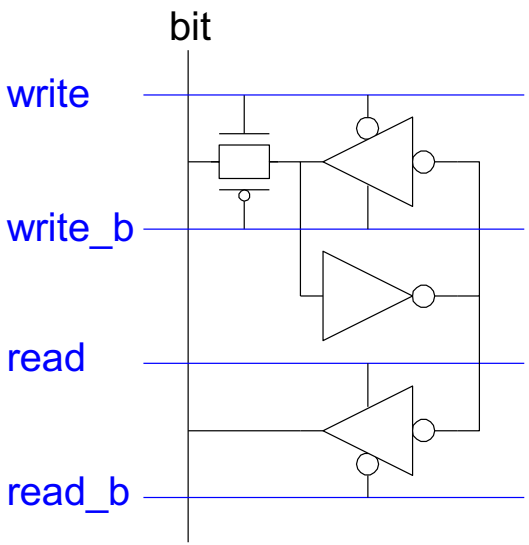

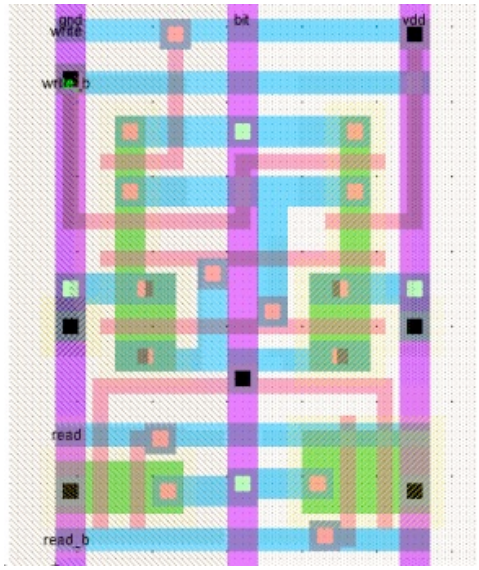

6T SRAM Cell

- **Cell size accounts for most of array size**
  - Reduce cell size at expense of complexity
- **6T SRAM Cell**
  - Used in most commercial chips
  - Data stored in cross-coupled inverters
- **Read:**
  - Precharge bit, bit_b
  - Raise wordline
- **Write:**
  - Drive data onto bit, bit_b
  - Raise wordline

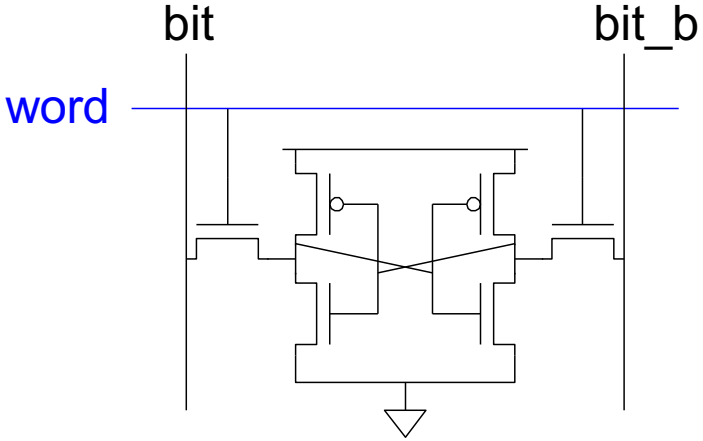

SRAM Read

- **Precharge both bitlines high**
- **Then turn on wordline**
- **One of the two bitlines will be pulled down by the cell**
- **Ex: A = 0, A_b = 1**
  - bit discharges, bit_b stays high
  - But A bumps up slightly
- ***Read stability***
  - A must not flip

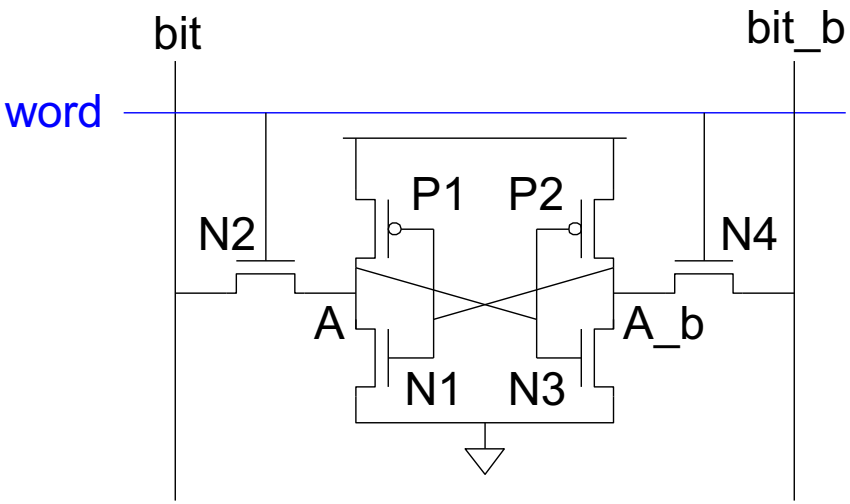

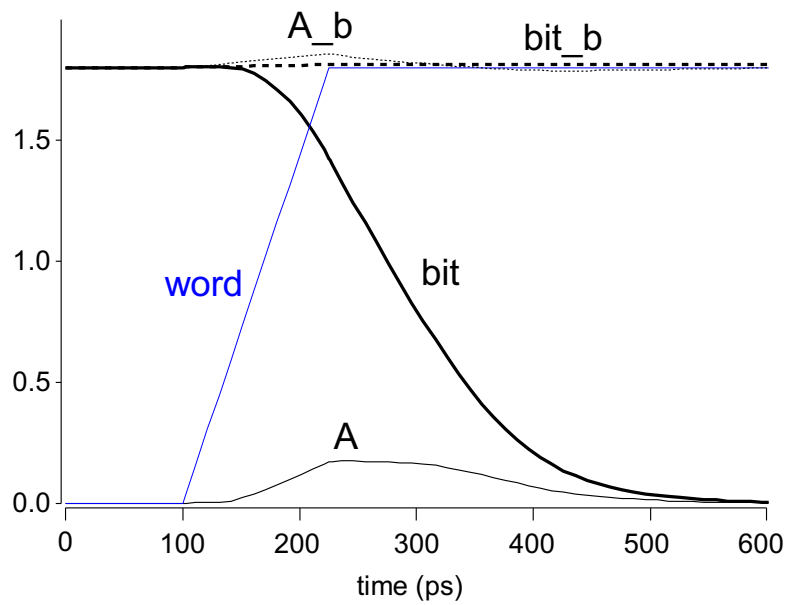

SRAM Read

- **Precharge both bitlines high**
- **Then turn on wordline**
- **One of the two bitlines will be pulled down by the cell**
- **Ex: A = 0, A_b = 1**
  - bit discharges, bit_b stays high
  - But A bumps up slightly
- ***Read stability***
  - A must not flip

N1 >> N2
N3 >> N4

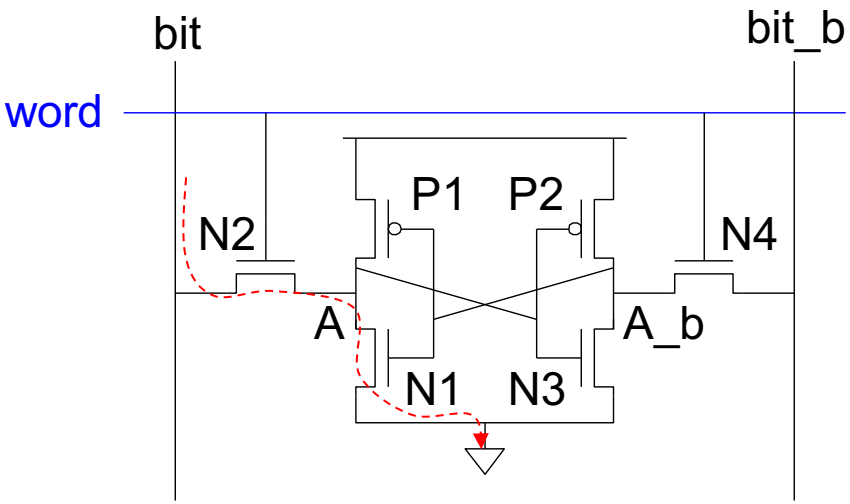

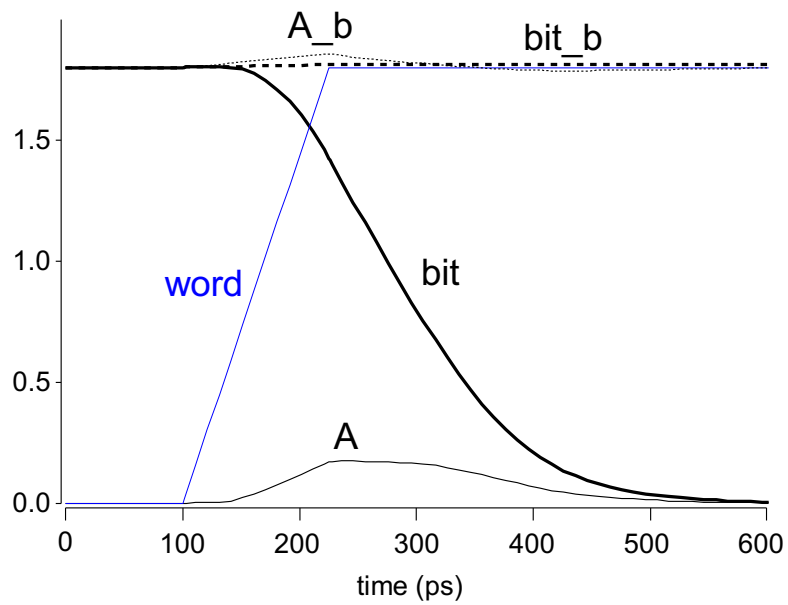

SRAM Write

- **Drive one bitline high, the other low**
- **Then turn on wordline**
- **Bitlines overpower cell with new value**
- **Ex: A = 0, A_b = 1, bit = 1, bit_b = 0**
  - Force A_b low, then A rises high
- ***Writability***
  - Must overpower feedback inverter

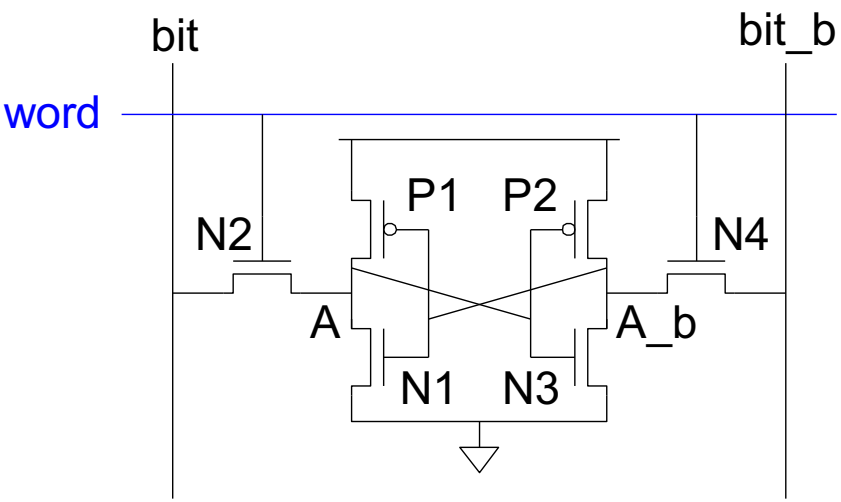

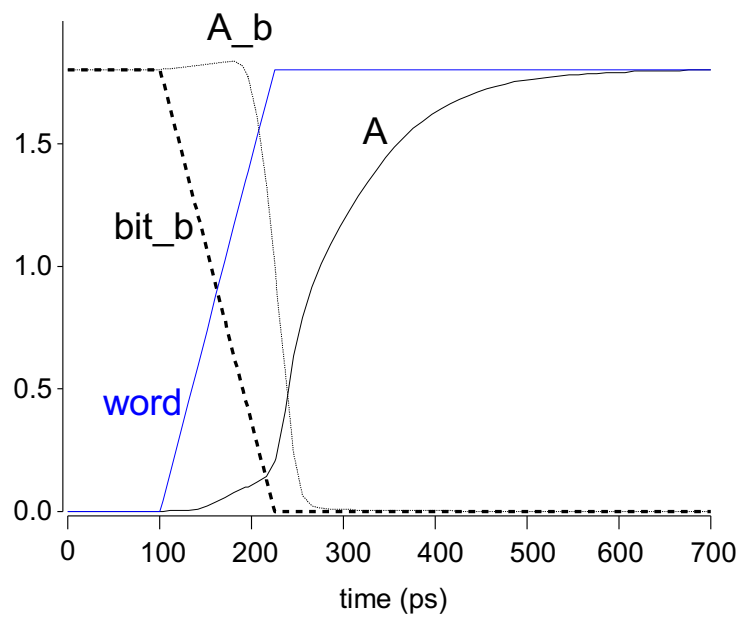

SRAM Write

- **Drive one bitline high, the other low**
- **Then turn on wordline**
- **Bitlines overpower cell with new value**
- **Ex: A = 0, A_b = 1, bit = 1, bit_b = 0**
  - Force A_b low, then A rises high
- ***Writability***
  - Must overpower feedback inverter

N2 >> P1
N4 >> P2

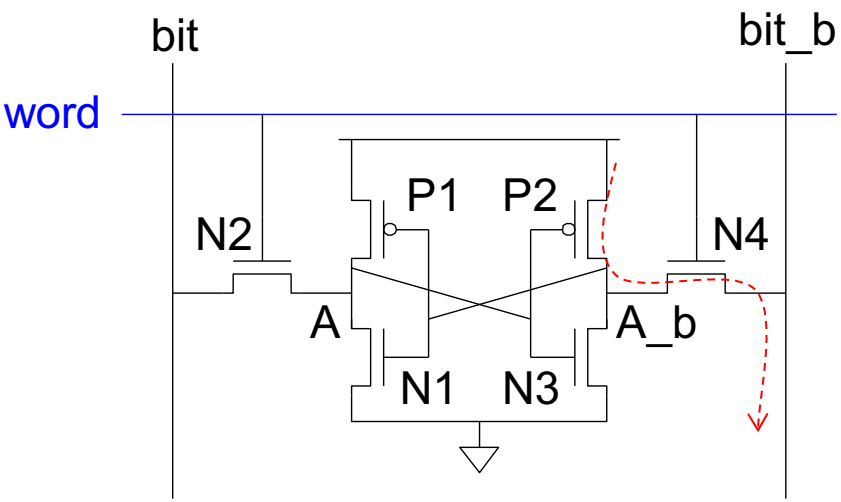

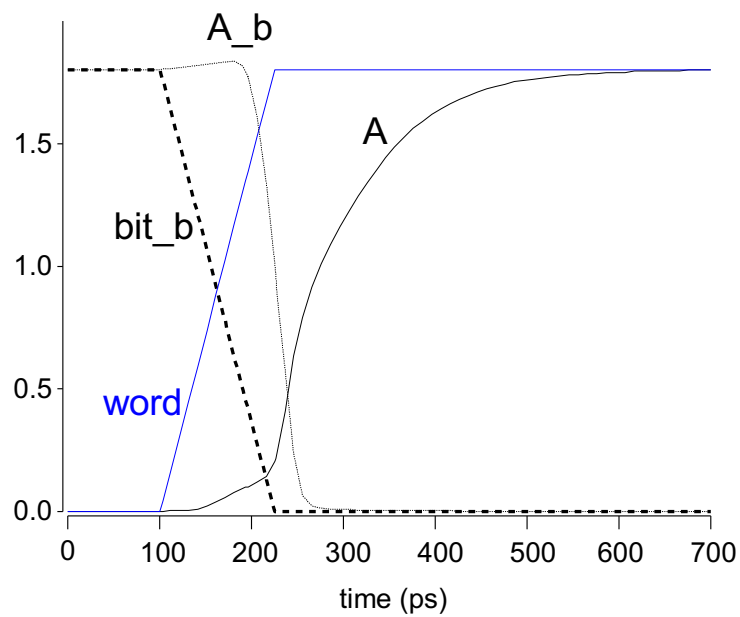

SRAM Sizing

- High bitlines must not overpower inverters during reads
- But low bitlines must write new value into cell

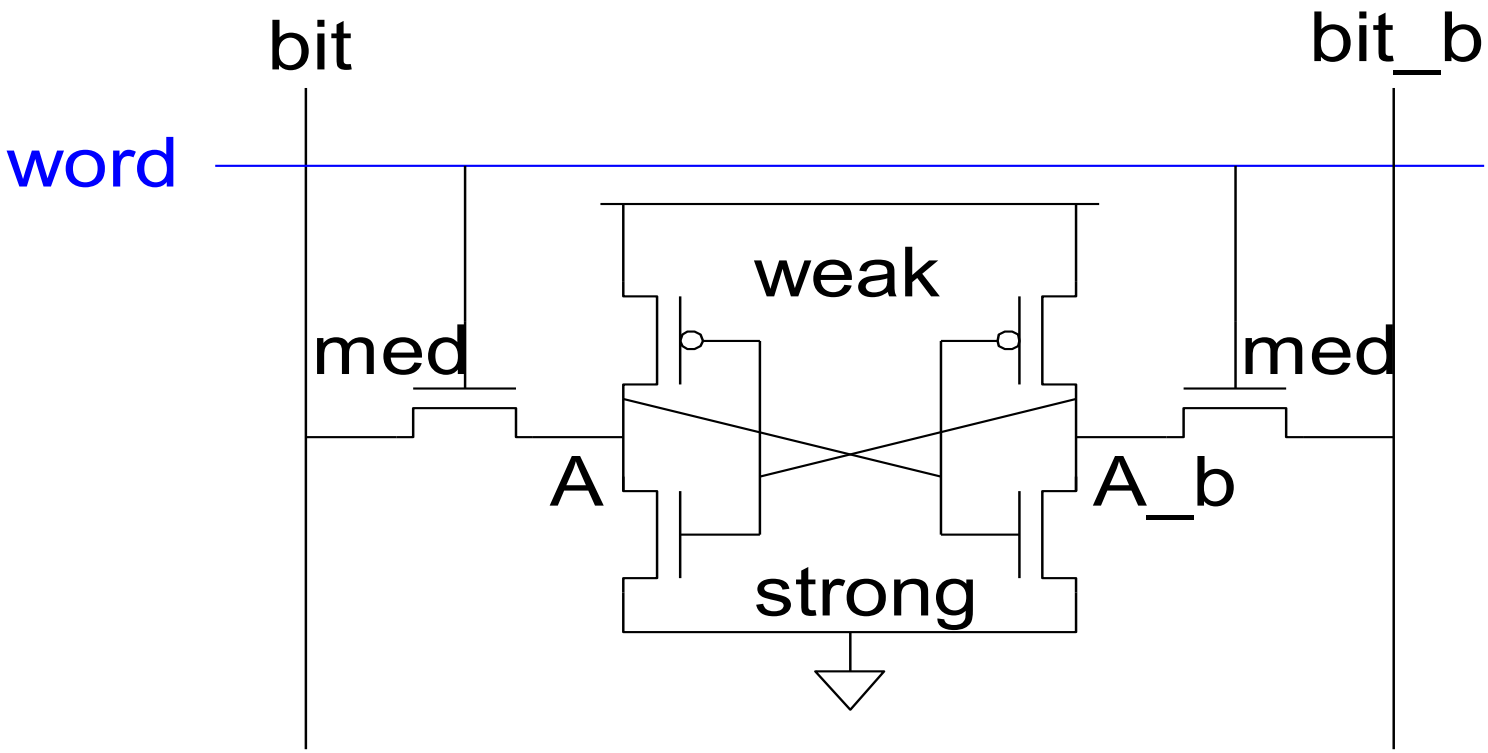

SRAM Column Example

Read

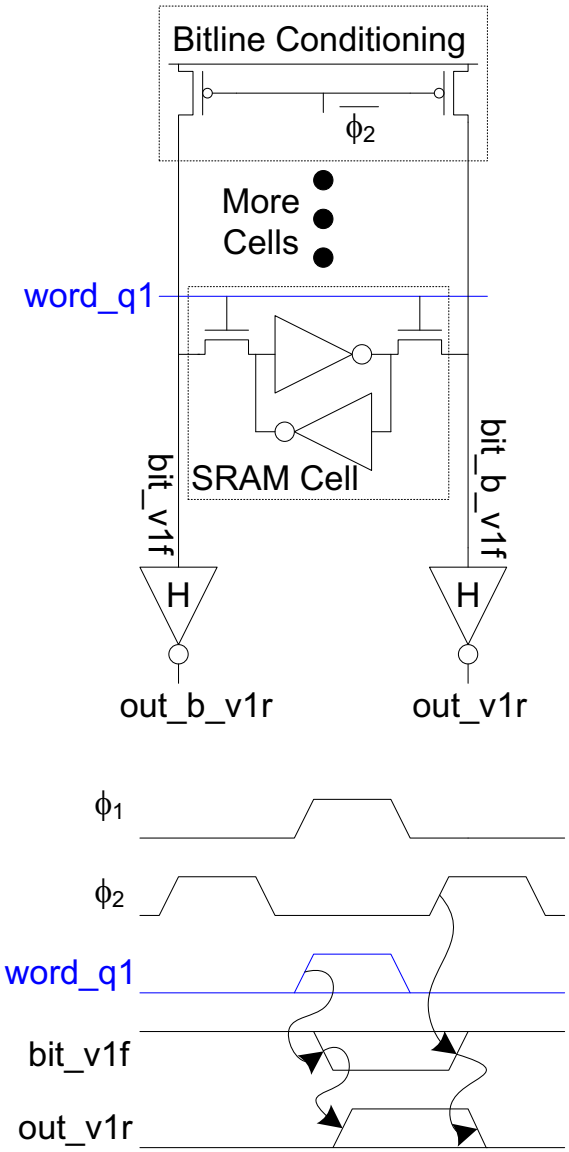

Write

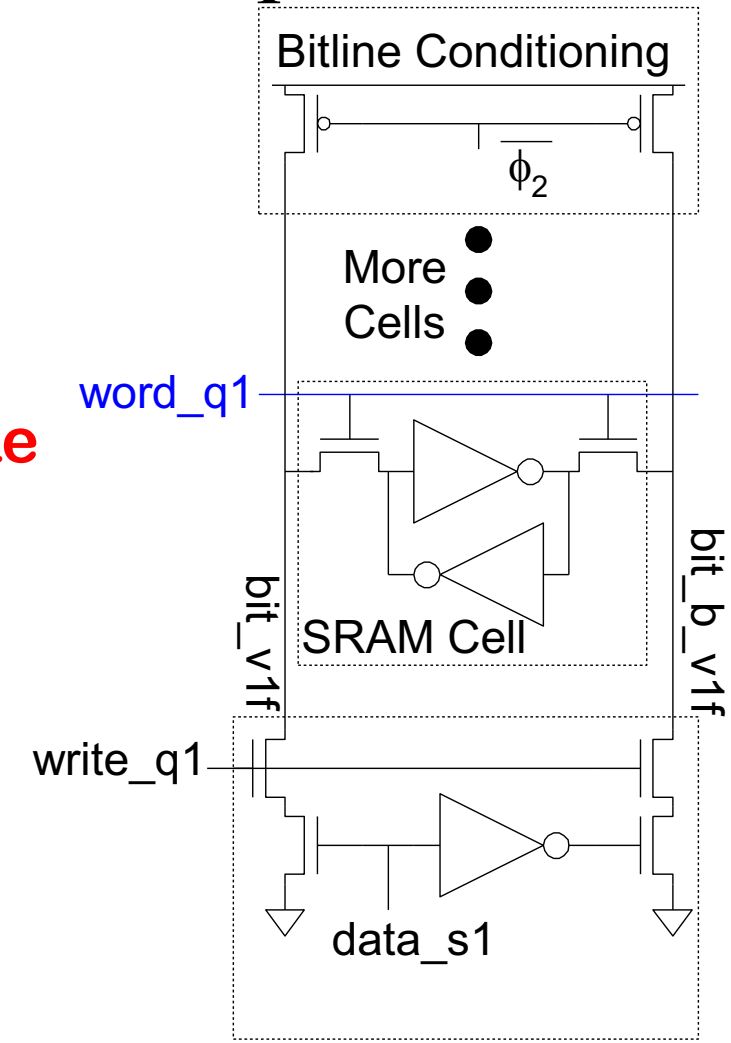

SRAM Layout

- **Cell size is critical: 26 x 45 λ (even smaller in industry)**
- **Tile cells sharing V_{DD}, GND, bitline contacts**

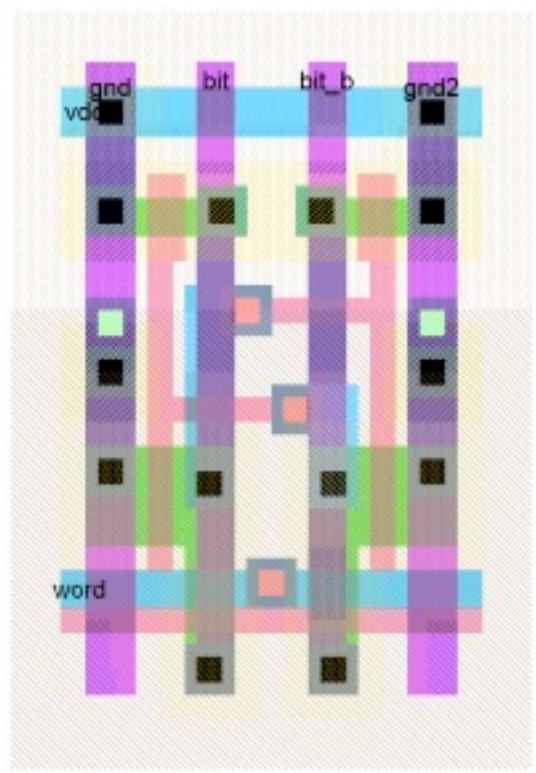

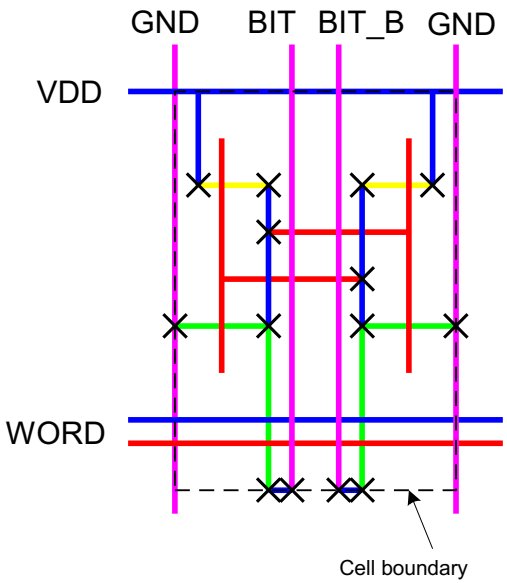

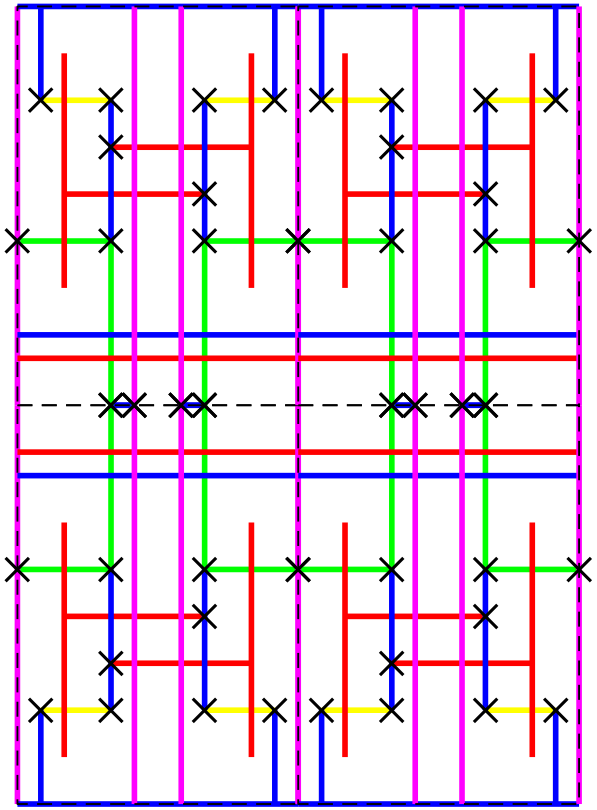

Thin Cell

- **In nanometer CMOS**
  - Avoid bends in polysilicon and diffusion
  - Orient all transistors in one direction
- ***Lithographically friendly* or *thin cell* layout fixes this**
  - Also reduces length and capacitance of bitlines

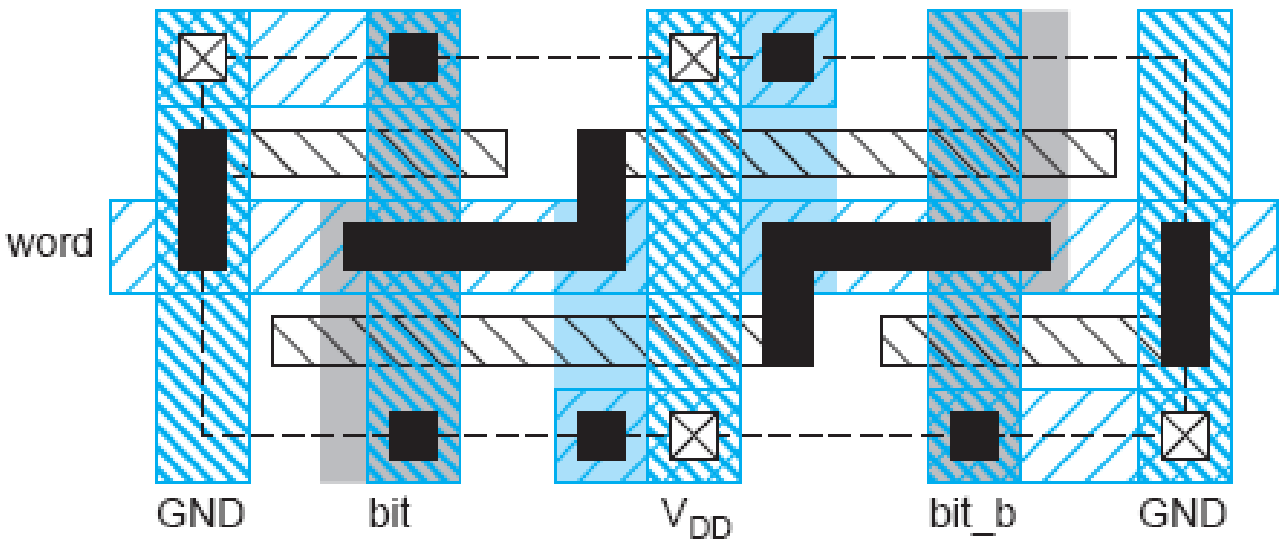

Commercial SRAMs

- **Five generations of Intel SRAM cell micrographs**
  - Transition to thin cell at 65 nm
  - Steady scaling of cell area

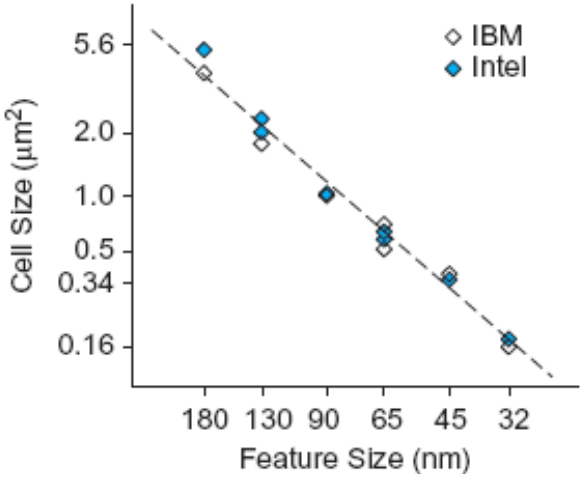

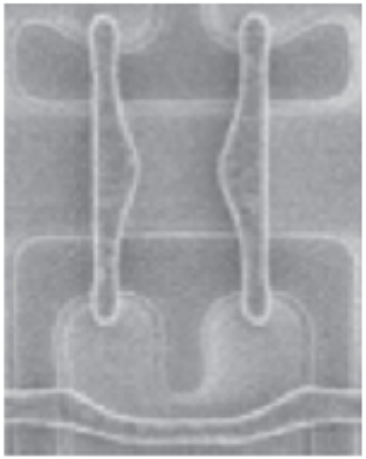

130 nm [Tyagi00]

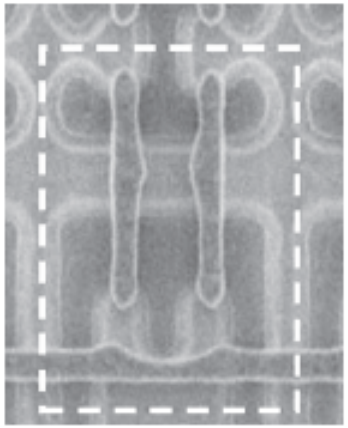

90 nm [Thompson02]

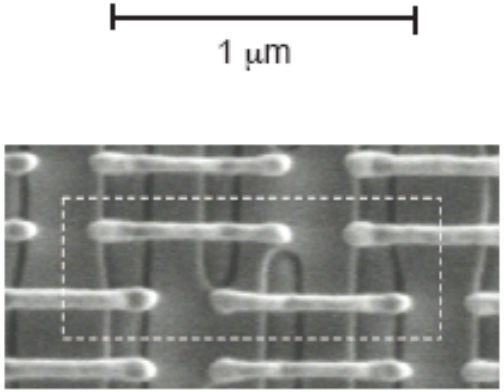

65 nm [Bai04]

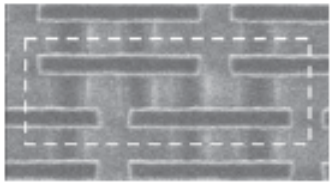

45 nm [Mistry07]

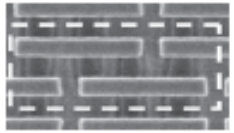

32 nm [Natarajan08]

Decoders

- **n:2^n decoder consists of 2^n n-input AND gates**
  - One needed for each row of memory
  - Build AND from NAND or NOR gates

Static CMOS

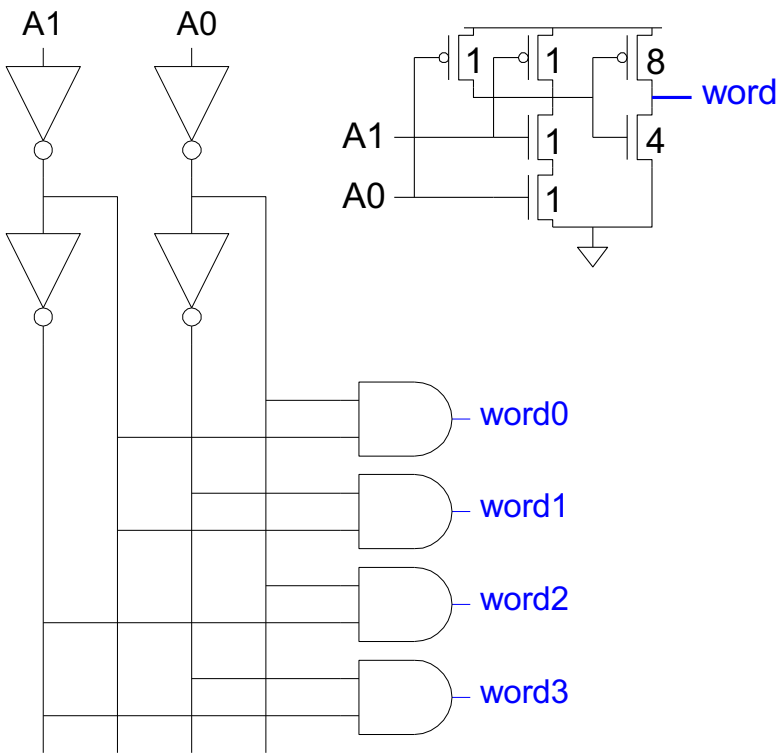

Pseudo-nMOS

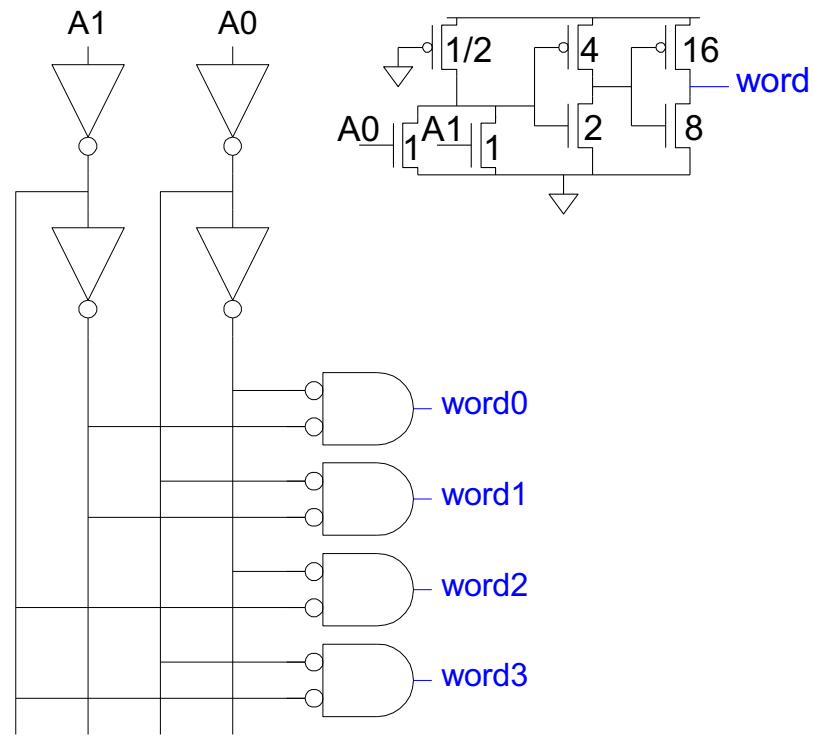

Decoder Layout

- **Decoders must be pitch-matched to SRAM cell**
  - Requires very skinny gates

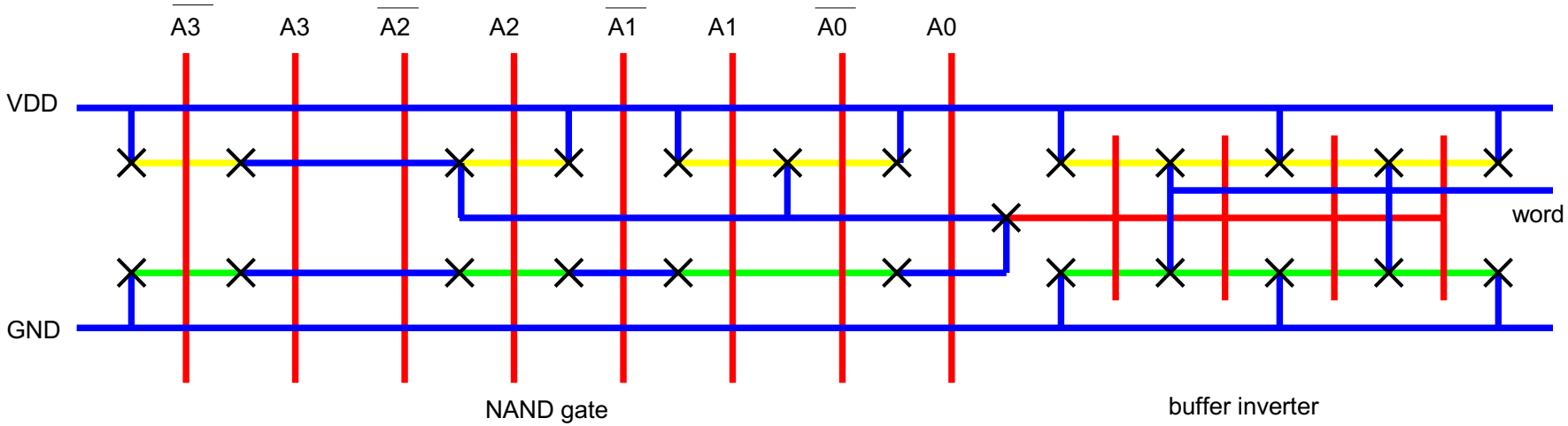

Large Decoders

- **For n > 4, NAND gates become slow**
  - Break large gates into multiple smaller gates

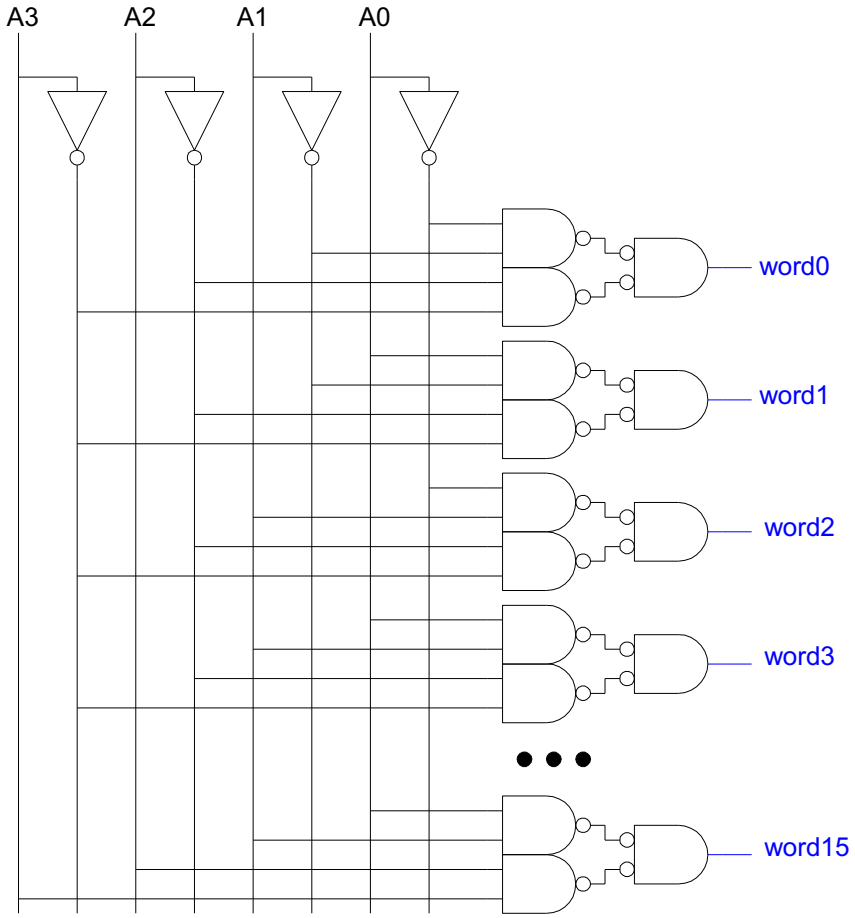

Column Circuitry

- **Some circuitry is required for each column**
  - Bitline conditioning
  - Sense amplifiers
  - Column multiplexing

Bitline Conditioning

- **Precharge bitlines high before reads**

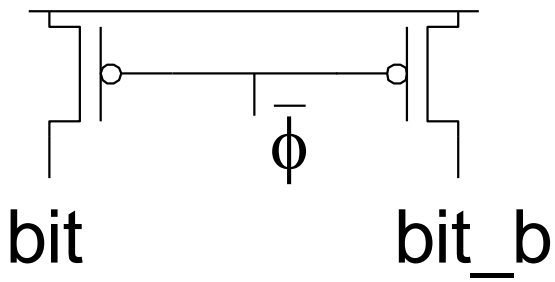

- **Equalize bitlines to minimize voltage difference when using sense amplifiers**

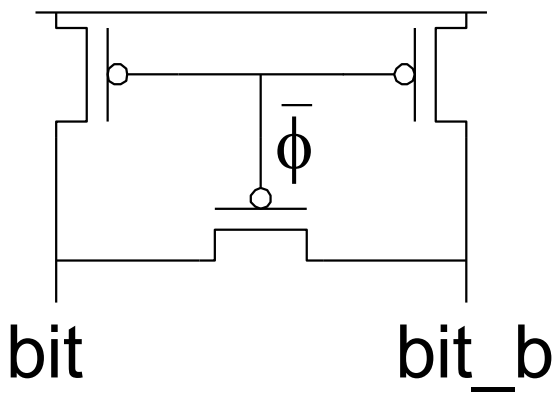

Sense Amplifiers

- **Bitlines have many cells attached**
  - Ex: 32-kbit SRAM has 256 rows x 128 cols
  - 128 cells on each bitline

- **$t_{pd} \propto (C/I)\ \Delta V$**
  - Even with shared diffusion contacts, 64C of diffusion capacitance (big C)
  - Discharged slowly through small transistors (small I)

- ***Sense amplifiers* are triggered on small voltage swing (reduce ΔV)**

Differential Pair Amp

- Differential pair requires no clock
- But always dissipates static power

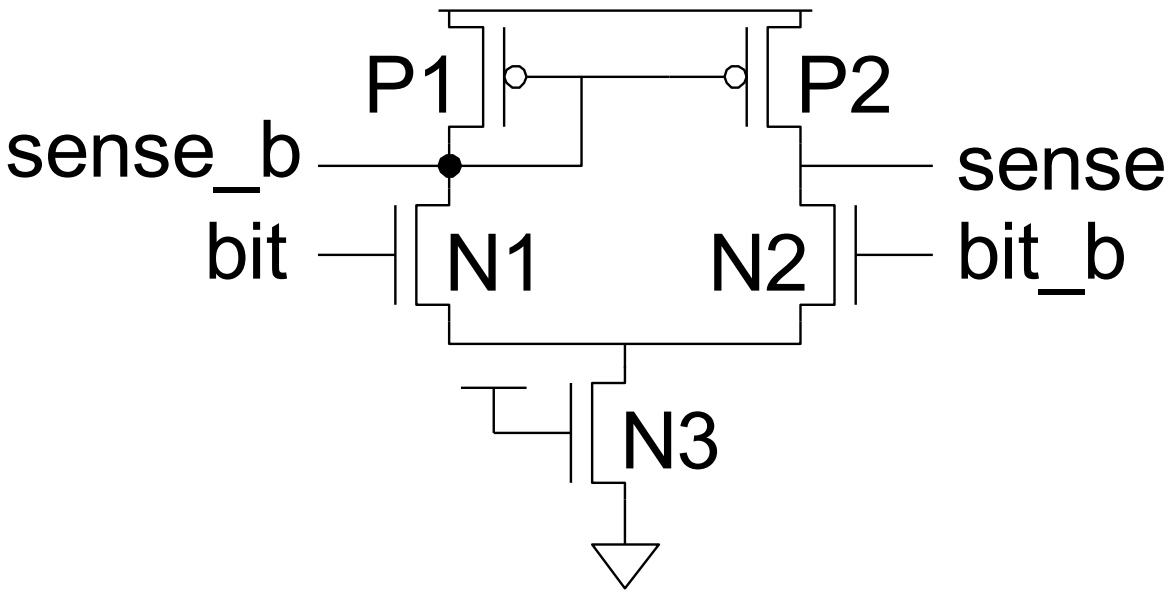

Twisted Bitlines

- **Sense amplifiers also amplify noise**
  - Coupling noise is severe in modern processes
  - Try to couple equally onto bit and bit_b
  - Done by *twisting* bitlines

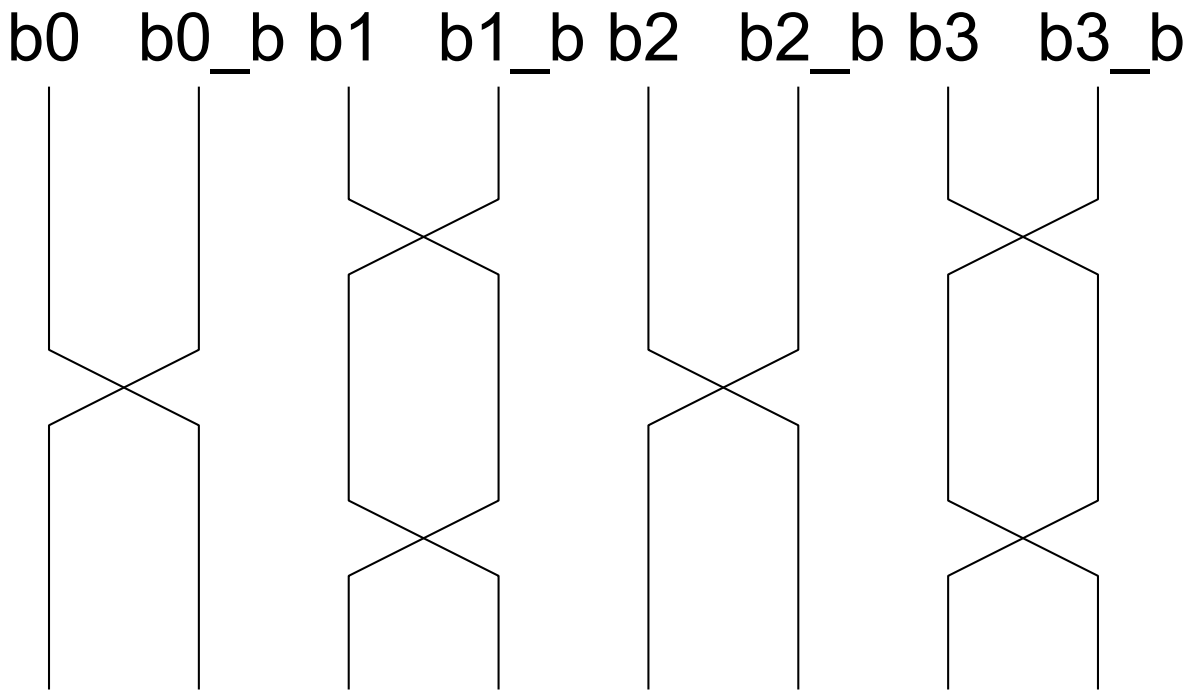

Tree Decoder Mux

- **Column mux can use pass transistors**
  - Use nMOS only, precharge outputs
- **One design is to use k series transistors for 2^k:1 mux**
  - No external decoder logic needed

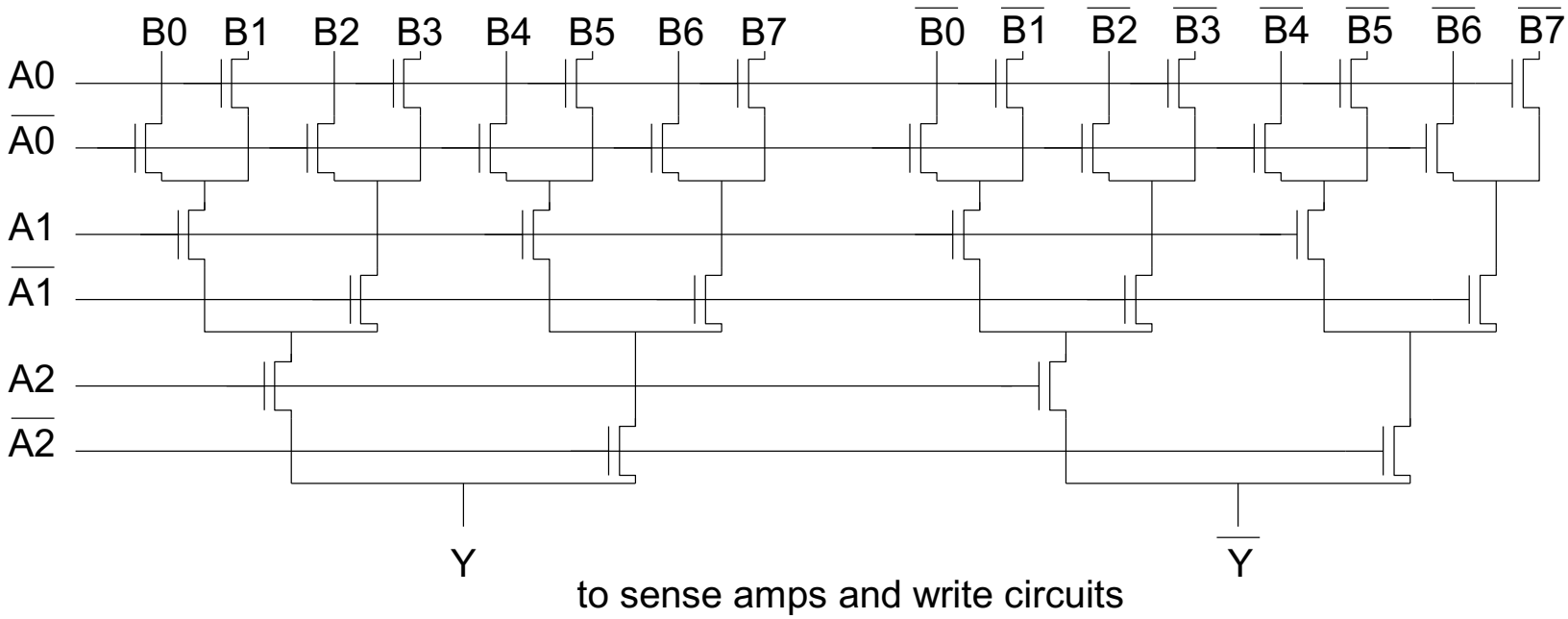

Single Pass-Gate Mux

- **Or eliminate series transistors with separate decoder**

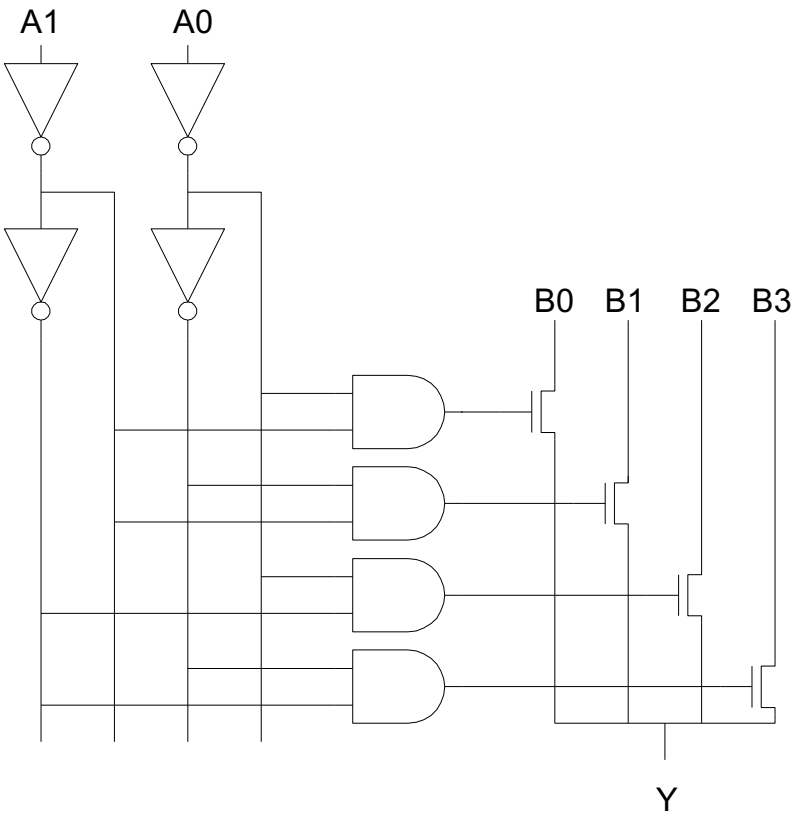

Large SRAMs

- **Large SRAMs are split into subarrays for speed**
- **Ex: UltraSparc 512KB cache**
  - 4 128 KB subarrays
  - Each have 16 8KB banks
  - 256 rows x 256 cols / bank
  - 60% subarray area efficiency
  - Also space for tags & control

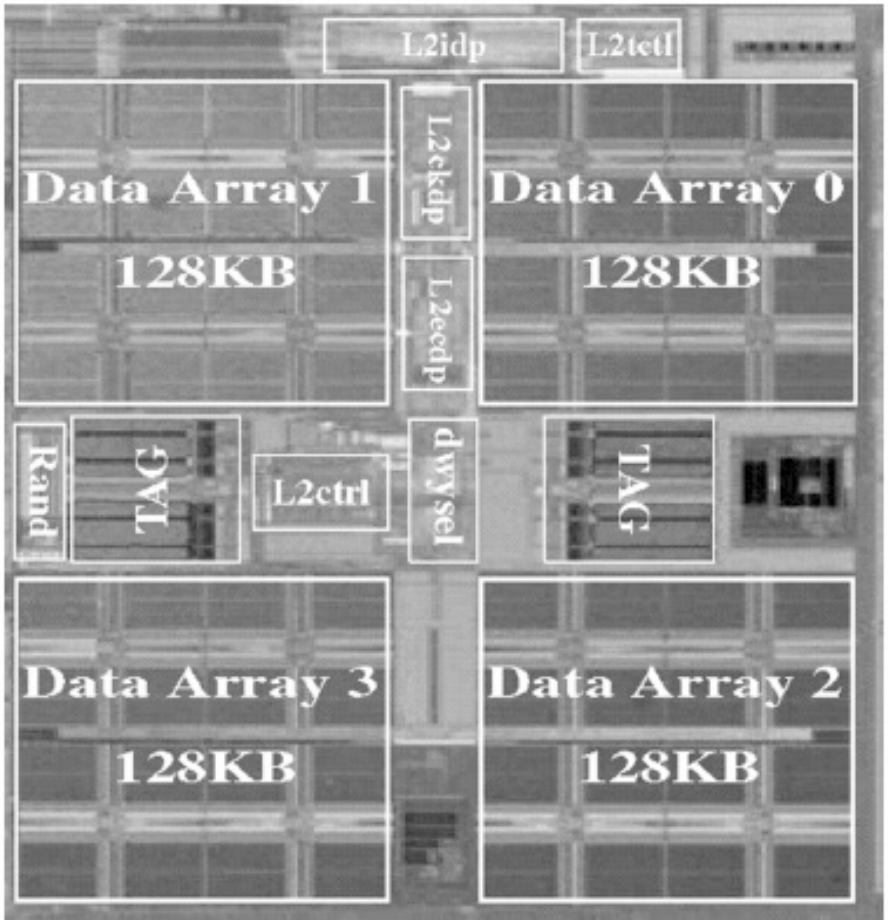

[Shin05]