Introduction to VLSI Design

Lecture 9 Combinational Circuit Design

Zhuo Feng

Outline

- Bubble Pushing
- Compound Gates
- Logical Effort Example
- Input Ordering
- Asymmetric Gates
- Skewed Gates
- Best P/N ratio
- Pseudo-nMOS Logic

Example 1

1) Sketch a design using NAND, NOR, and NOT gates.
Assume ~S is available.

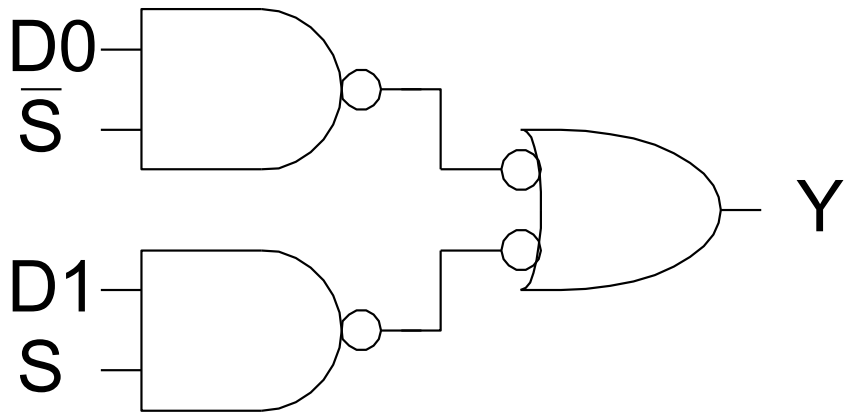

Bubble Pushing

- **Start with network of AND / OR gates**
- **Convert to NAND / NOR + inverters**
- **Push bubbles around to simplify logic**
  - Remember DeMorgan's Law

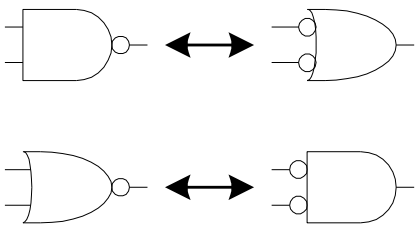

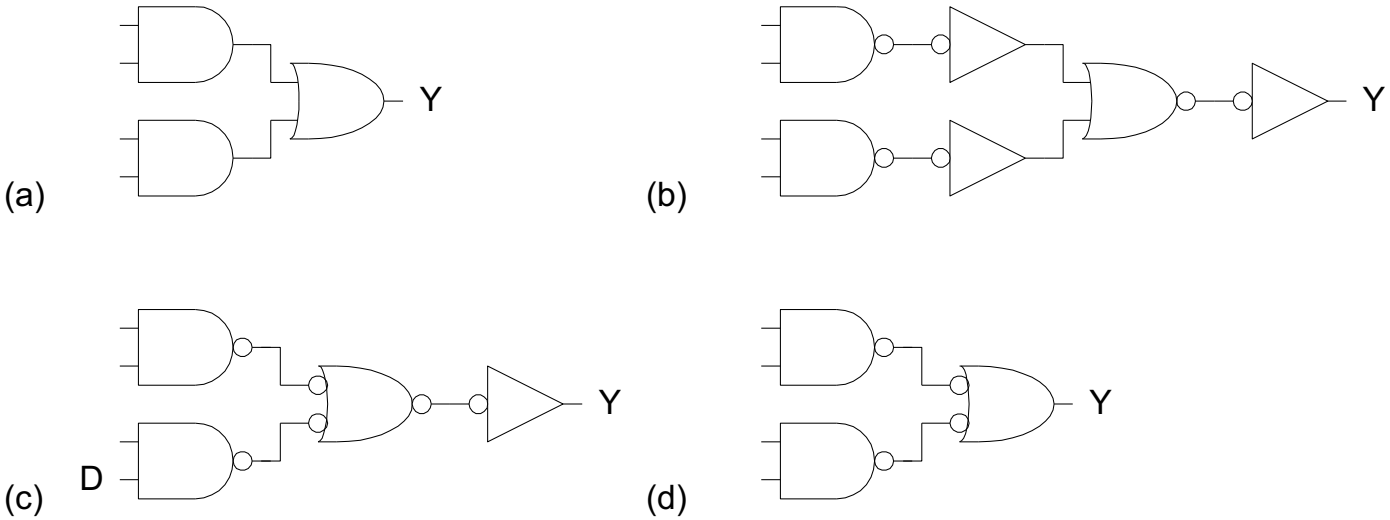

Example 2

2) Sketch a design using one compound gate and one NOT gate. Assume ~S is available.

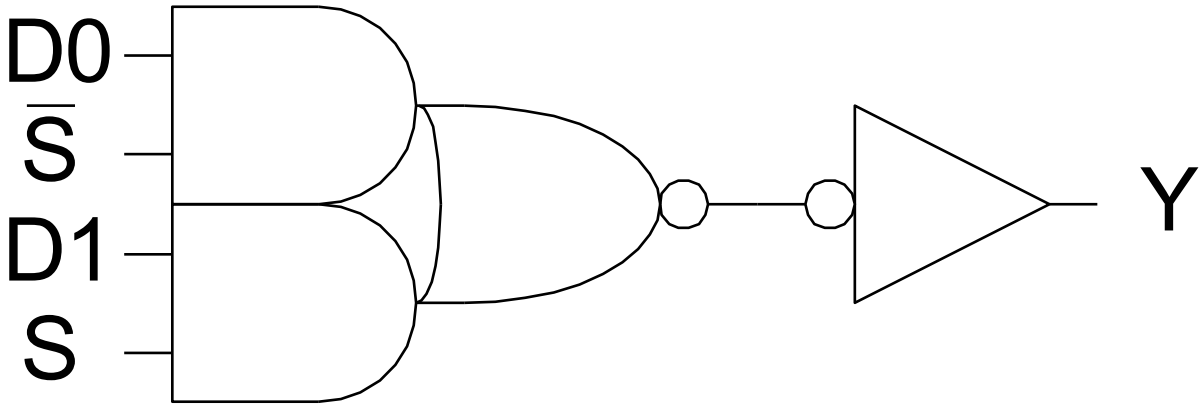

Compound Gates

Logical Effort of compound gates

unit inverter

$$Y = \overline{A}$$

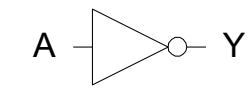

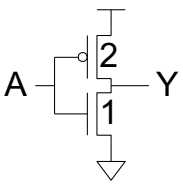

$g_A = 3/3$

$p = 3/3$

AOI21

$$Y = \overline{A \bullet B + C}$$

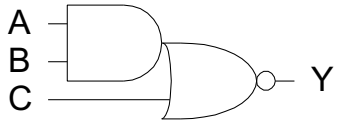

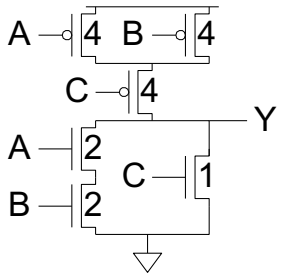

$g_A = 6/3$

$g_B = 6/3$

$g_C = 5/3$

$p = 7/3$

AOI22

$$Y = \overline{A \bullet B + C \bullet D}$$

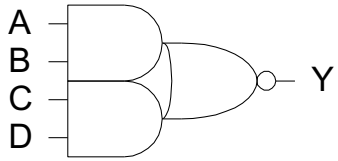

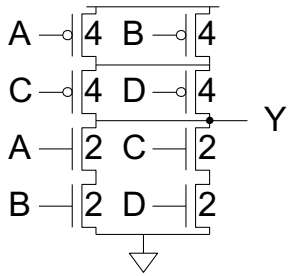

$g_A =$

$g_B =$

$g_C =$

$g_D =$

$p =$

Complex AOI

$$Y = \overline{A \bullet (B + C) + D \bullet E}$$

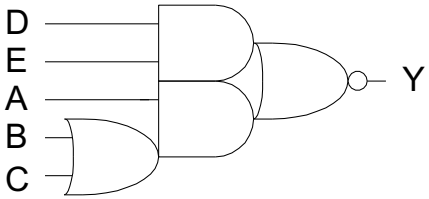

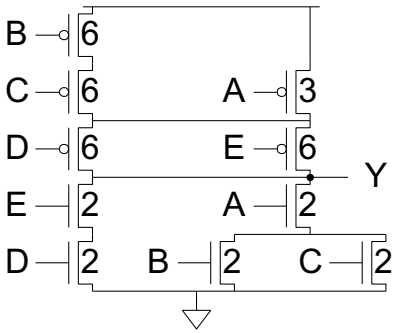

$g_A =$

$g_B =$

$g_C =$

$g_D =$

$g_E =$

$p =$

Compound Gates

Logical Effort of compound gates

unit inverter

$$Y = \overline{A}$$

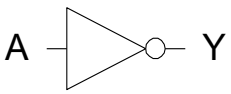

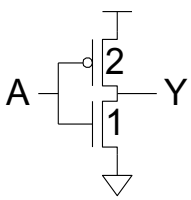

$g_A = 3/3$

$p = 3/3$

AOI21

$$Y = \overline{A \bullet B + C}$$

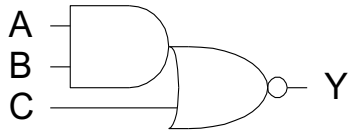

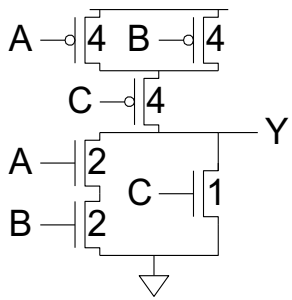

$g_A = 6/3$

$g_B = 6/3$

$g_C = 5/3$

$p = 7/3$

AOI22

$$Y = \overline{A \bullet B + C \bullet D}$$

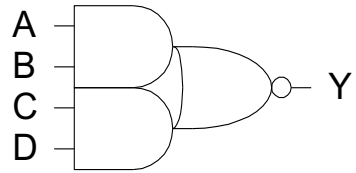

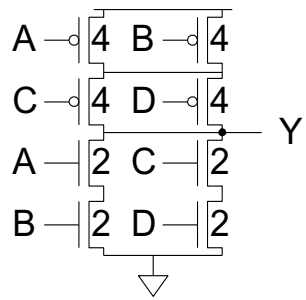

$g_A = 6/3$

$g_B = 6/3$

$g_C = 6/3$

$g_D = 6/3$

$p = 12/3$

Complex AOI

$$Y = \overline{A \bullet (B + C) + D \bullet E}$$

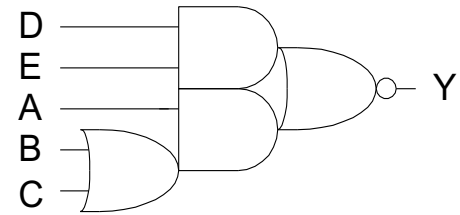

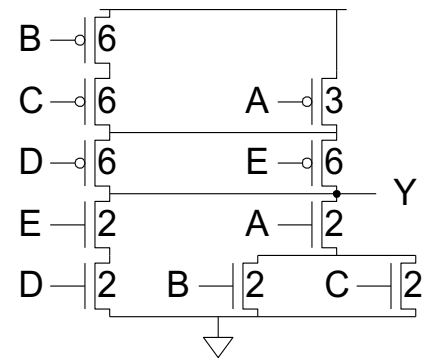

$g_A = 5/3$

$g_B = 8/3$

$g_C = 8/3$

$g_D = 8/3$

$g_E = 8/3$

$p = 16/3$

Example 3

- **The multiplexer has a maximum input capacitance of 16 units on each input. It must drive a load of 160 units. Estimate the delay of the NAND and compound gate designs.**

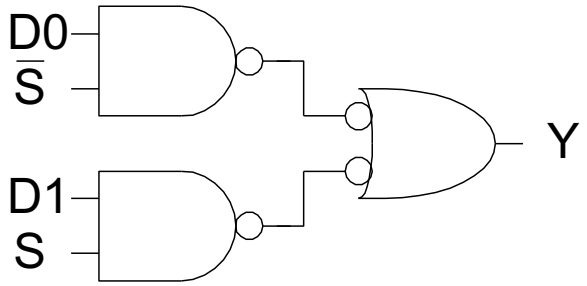

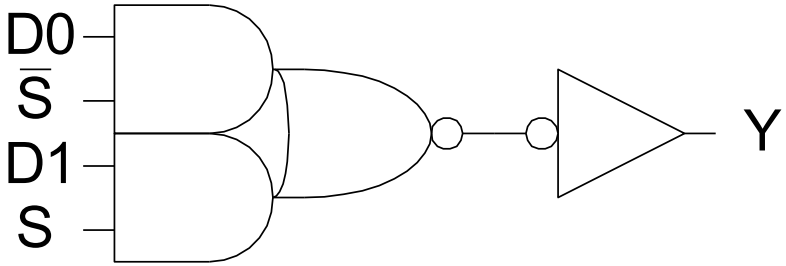

H = 160 / 16 = 10
B = 1
N = 2

NAND Solution

$$P = 2 + 2 = 4$$

$$G = (4/3)\bullet(4/3) = 16/9$$

$$F = GBH = 160/9$$

$$\hat{f} = \sqrt[N]{F} = 4.2$$

$$D = N\hat{f} + P = 12.4\tau$$

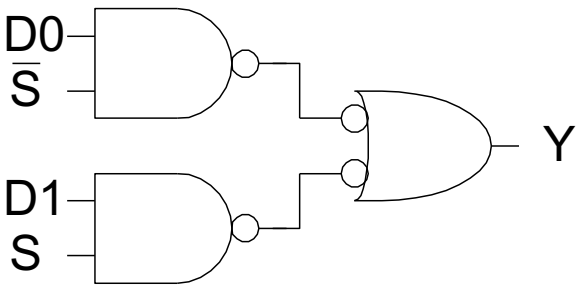

Compound Solution

$$P = 4 + 1 = 5$$

$$G = (6/3)\bullet(1) = 2$$

$$F = GBH = 20$$

$$\hat{f} = \sqrt[N]{F} = 4.5$$

$$D = N\hat{f} + P = 14\tau$$

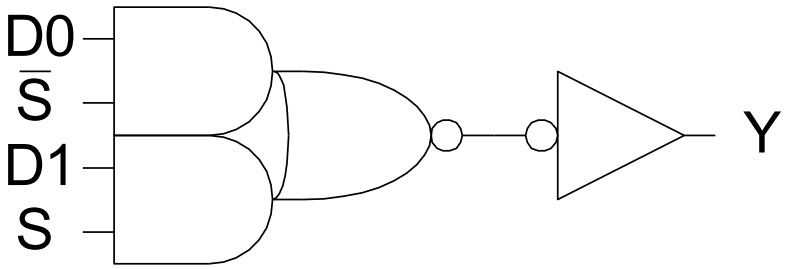

Example 4

- **Annotate your designs with transistor sizes that achieve this delay.**

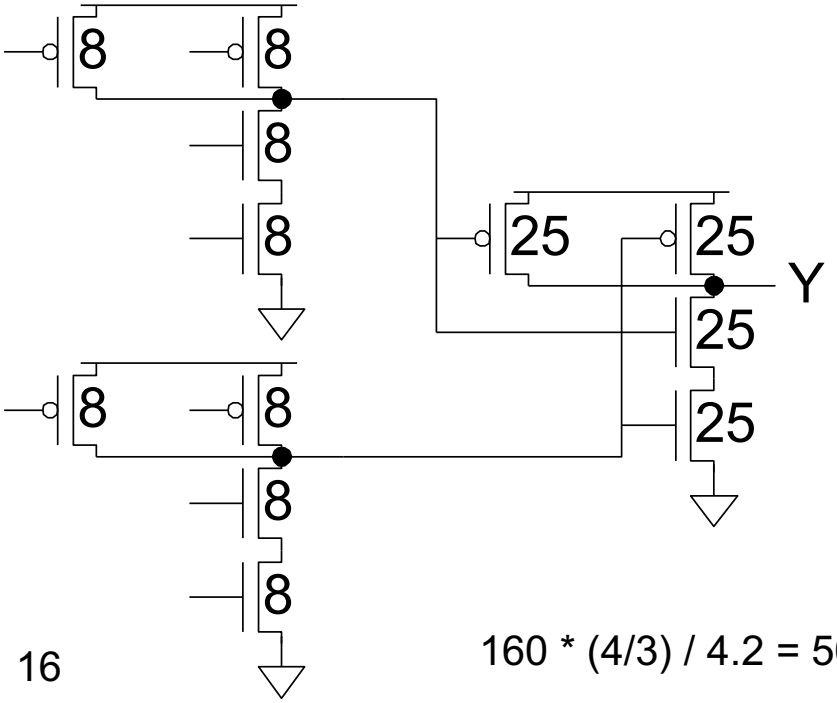

16

160 * (4/3) / 4.2 = 50

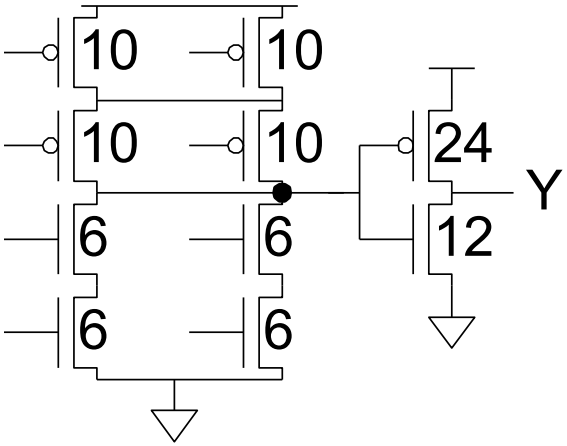

16

160 * 1 / 4.5 = 36

Input Order

- **Our parasitic delay model was too simple**
  - Calculate parasitic delay for Y falling
    - If A arrives latest? 2τ
    - If B arrives latest? 2.33τ

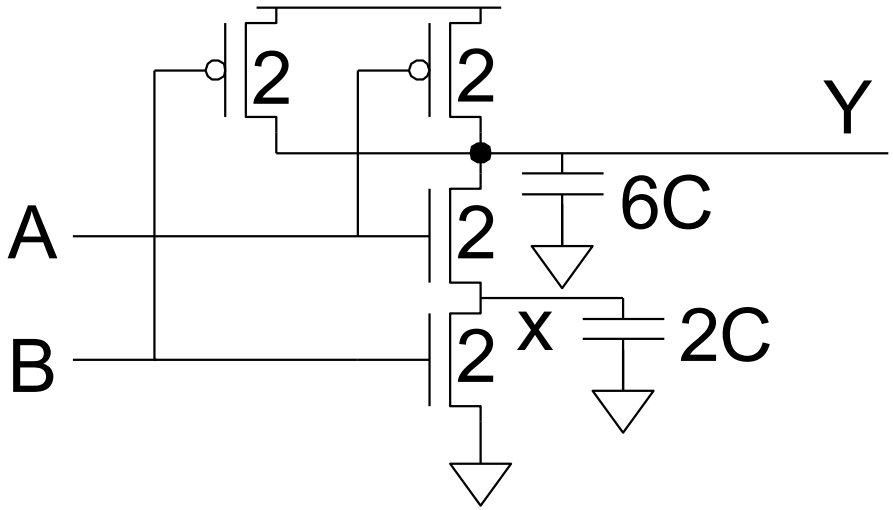

Inner & Outer Inputs

- ***Outer* input is closest to rail (B)**
- ***Inner* input is closest to output (A)**

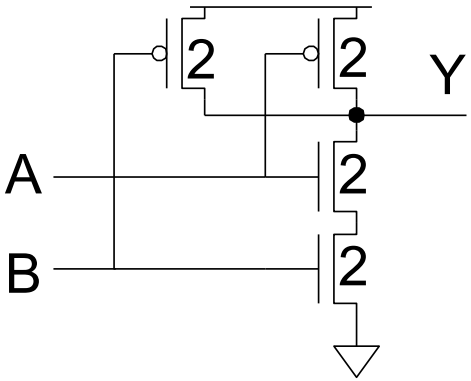

- **If input arrival time is known**
  - Connect latest input to inner terminal

Asymmetric Gates

- **Asymmetric gates favor one input over another**
- **Ex: suppose input A of a NAND gate is most critical**
  - Use smaller transistor on A (less capacitance)
  - Boost size of noncritical input
  - So total resistance is same

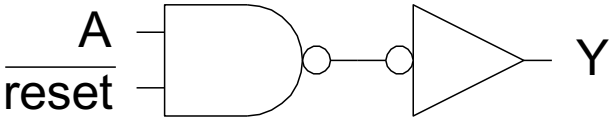

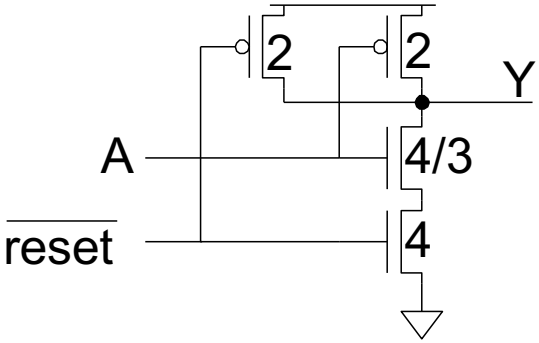

- **$g_A = 10/9$**
- **$g_B = 2$**
- **$g_{total} = g_A + g_B = 28/9$**
- **Asymmetric gate approaches g = 1 on critical input**
- **But total logical effort goes up**

Symmetric Gates

- **Inputs can be made perfectly symmetric**

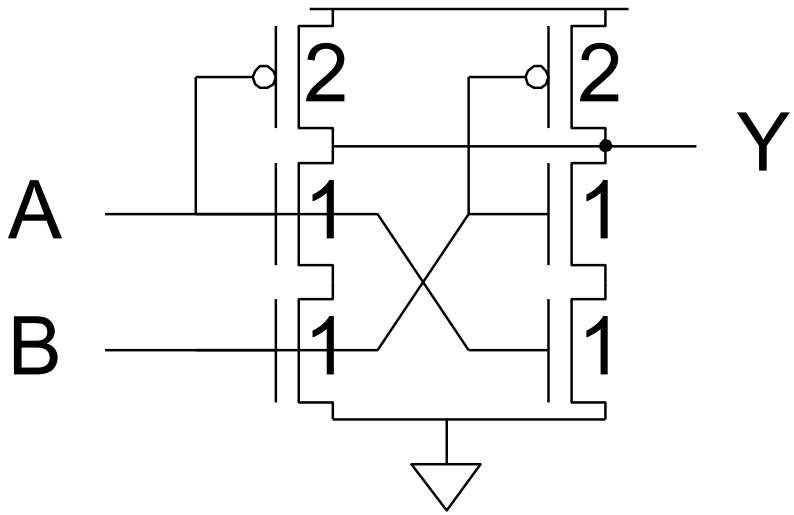

Skewed Gates

- **Skewed gates favor one edge over another**
- **Ex: suppose rising output of inverter is most critical**
  - Downsize noncritical nMOS transistor

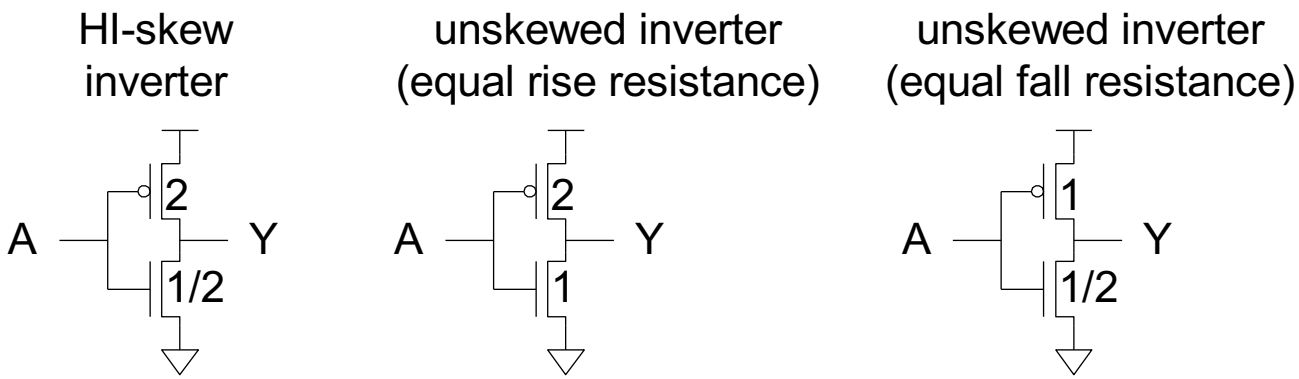

- **Calculate logical effort by comparing to unskewed inverter with same effective resistance on that edge.**
  - $g_u = 2.5 / 3 = 5/6$
  - $g_d = 2.5 / 1.5 = 5/3$

HI- and LO-Skew

- **Def: Logical effort of a skewed gate for a particular transition is the ratio of the input capacitance of that gate to the input capacitance of an unskewed inverter delivering the same output current for the same transition.**

- **Skewed gates reduce size of noncritical transistors**
  - HI-skew gates favor rising output (small nMOS)
  - LO-skew gates favor falling output (small pMOS)

- **Logical effort is smaller for favored direction**
- **But larger for the other direction**

Catalog of Skewed Gates

	Inverter	NAND2	NOR2
unskewed	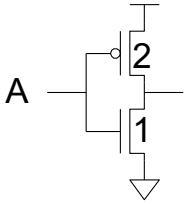 $g_u = 1$ $g_d = 1$ $g_{avg} = 1$	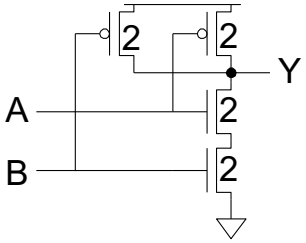 $g_u = 4/3$ $g_d = 4/3$ $g_{avg} = 4/3$	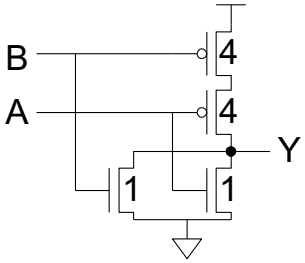 $g_u = 5/3$ $g_d = 5/3$ $g_{avg} = 5/3$
HI-skew	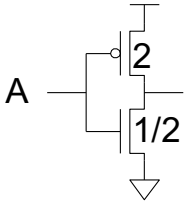 $g_u = 5/6$ $g_d = 5/3$ $g_{avg} = 5/4$	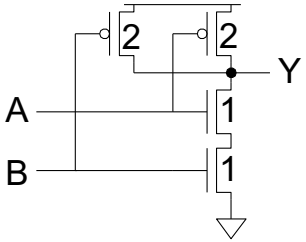 $g_u = 1$ $g_d = 2$ $g_{avg} = 3/2$	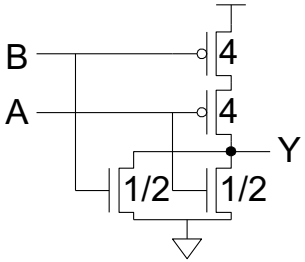 $g_u = 3/2$ $g_d = 3$ $g_{avg} = 9/4$
LO-skew	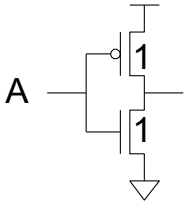 $g_u = 4/3$ $g_d = 2/3$ $g_{avg} = 1$	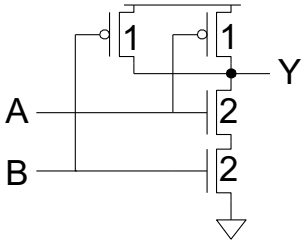 $g_u = 2$ $g_d = 1$ $g_{avg} = 3/2$	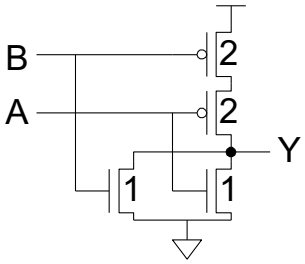 $g_u = 2$ $g_d = 1$ $g_{avg} = 3/2$

Asymmetric Skew

- **Combine asymmetric and skewed gates**
  - Downsize noncritical transistor on unimportant input
  - Reduces parasitic delay for critical input

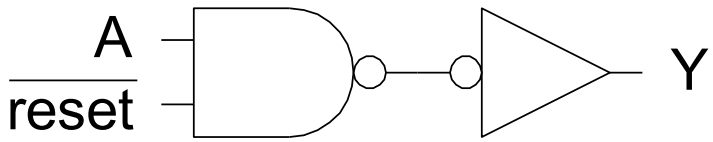

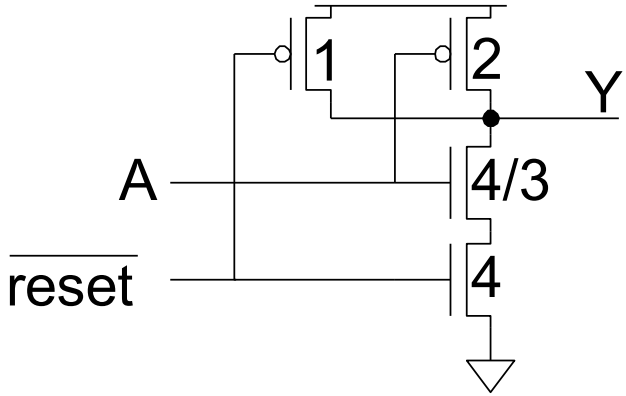

Best P/N Ratio

- **We have selected P/N ratio for unit rise and fall resistance (μ = 2-3 for an inverter).**
- **Alternative: choose ratio for least average delay**
- **Ex: inverter**
  - Delay driving identical inverter
  - $t_{pdf} = (P+1)$
  - $t_{pdr} = (P+1)(\mu/P)$
  - $t_{pd} = (P+1)(1+\mu/P)/2 = (P + 1 + \mu + \mu/P)/2$
  - Differentiate t_{pd} w.r.t. P
  - Least delay for P = $\sqrt{\mu}$

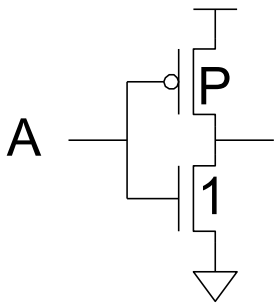

P/N Ratios

- **In general, the best P/N ratio**
  - Only improves average delay slightly for inverters
  - But significantly decreases area and power

fastest P/N ratio

Inverter

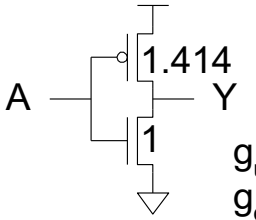

$g_u = 1.15$
$g_d = 0.81$
$g_{avg} = 0.98$

NAND2

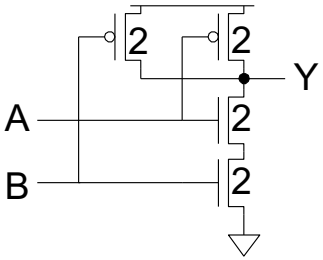

$g_u = 4/3$
$g_d = 4/3$
$g_{avg} = 4/3$

NOR2

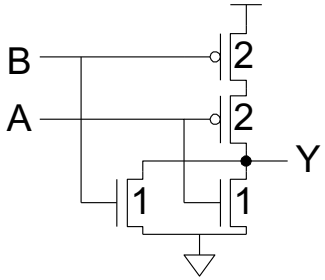

$g_u = 2$
$g_d = 1$
$g_{avg} = 3/2$

Observations

- **For speed:**
  - NAND vs. NOR
  - Many simple stages vs. fewer high fan-in stages
  - Latest-arriving input
- **For area and power:**
  - Many simple stages vs. fewer high fan-in stages

- **What makes a circuit fast?**
  - $I = C\, dV/dt$ -> $t_{pd} \propto (C/I)\, \Delta V$
  - low capacitance
  - high current
  - small swing

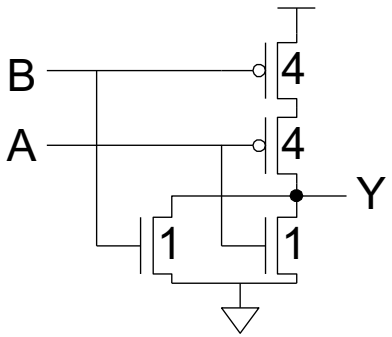

- **Logical effort is proportional to C/I**
- **pMOS are the enemy!**
  - High capacitance for a given current
- **Can we take the pMOS capacitance off the input?**
- **Various circuit families try to do this…**

Pseudo-nMOS

- **In the old days, nMOS processes had no pMOS**
  - Instead, use pull-up transistor that is always ON
- **In CMOS, use a pMOS that is always ON**
  - *Ratio* issue
  - Make pMOS about ¼ effective strength of pulldown network

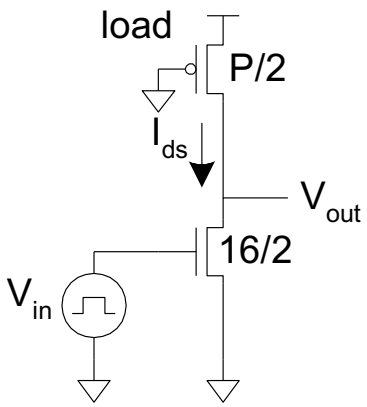

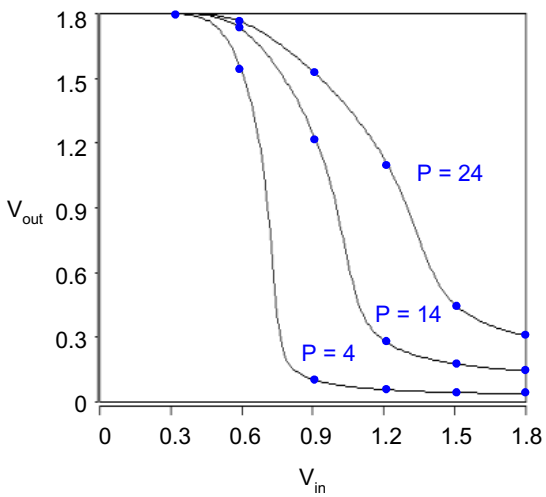

Pseudo-nMOS Gates

- **Design for unit current on output to compare with unit inverter.**
- **pMOS fights nMOS**

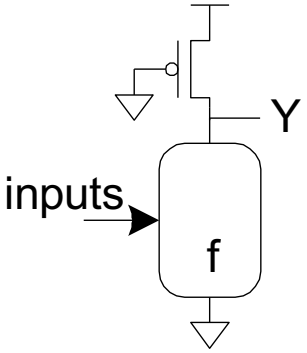

Inverter

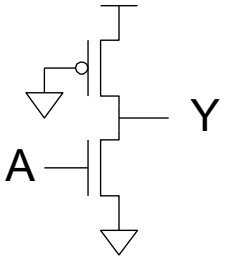

g_u =
g_d =
g_{avg} =
p_u =
p_d =
p_{avg} =

NAND2

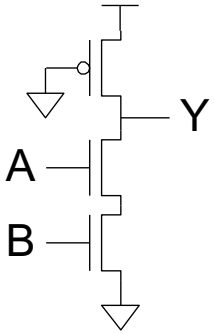

g_u =
g_d =
g_{avg} =
p_u =
p_d =
p_{avg} =

NOR2

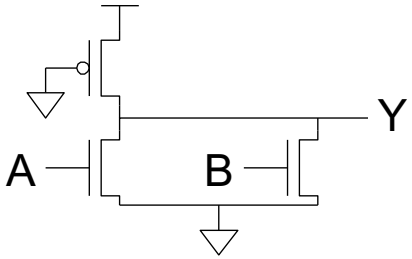

g_u =
g_d =
g_{avg} =
p_u =
p_d =
p_{avg} =

Pseudo-nMOS Gates

- **Design for unit current on output to compare with unit inverter.**
- **pMOS fights nMOS**

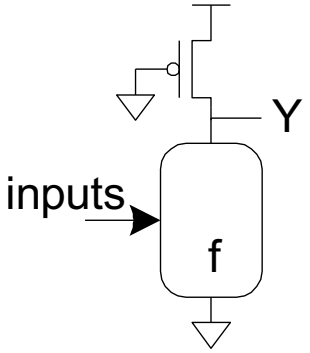

Inverter

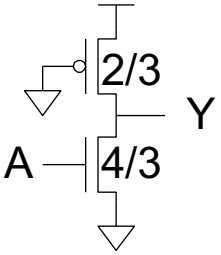

$g_u = 4/3$
$g_d = 4/9$
$g_{avg} = 8/9$
$p_u = 6/3$
$p_d = 6/9$
$p_{avg} = 12/9$

NAND2

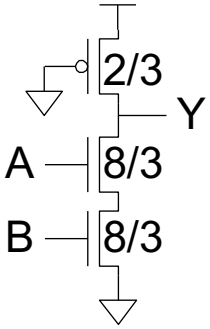

$g_u = 8/3$
$g_d = 8/9$
$g_{avg} = 16/9$
$p_u = 10/3$
$p_d = 10/9$
$p_{avg} = 20/9$

NOR2

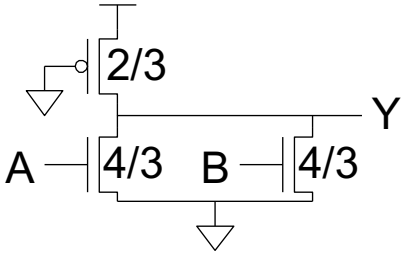

$g_u = 4/3$
$g_d = 4/9$
$g_{avg} = 8/9$
$p_u = 10/3$
$p_d = 10/9$
$p_{avg} = 20/9$