2025S CPE 690-A - Introduction to VLSI Design

Homework 2

Guillaume Wantiez

Exercise 1 – Novel inverter noise margins

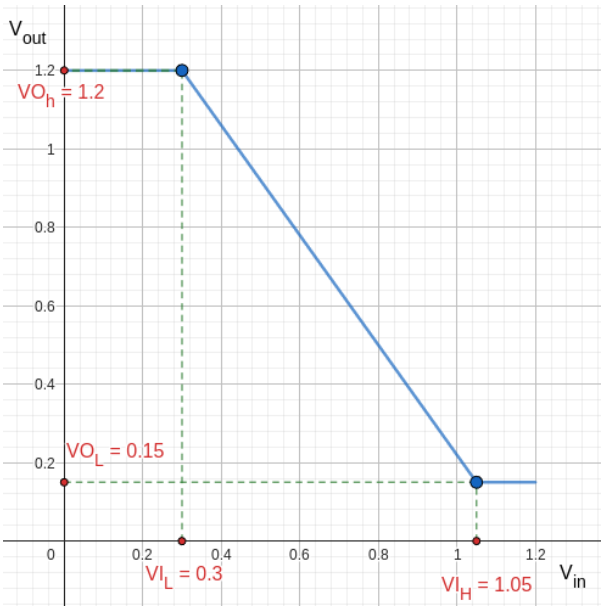

VOh = 1.2, VOl = 0.15, VIl = 0.3, VIh = 1.05

NMh = VOh – VIh = 1.2 - 1.05 = **0.15**

NMl = VIl – VOl = 0.3 - 0.15 = **0.15**

Exercise 2 – Pass transistor output voltage

(a)

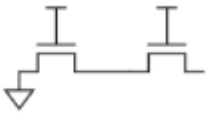

Vout = 0

(b)

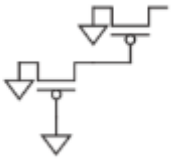

Vout = 2|Vtp|

(c)

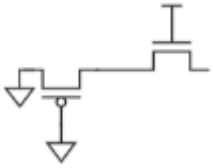

Vout = |Vtp|

(d)

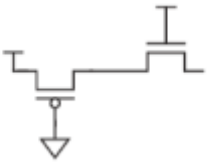

Vout = VDD – Vtn

Exercise 3 – 2 Input NOR gate – Part 1

Assuming each source and drain have its own diffusion capacitance, the intermediate node between the two Pmos is counted as (4 + 4)C = 8C

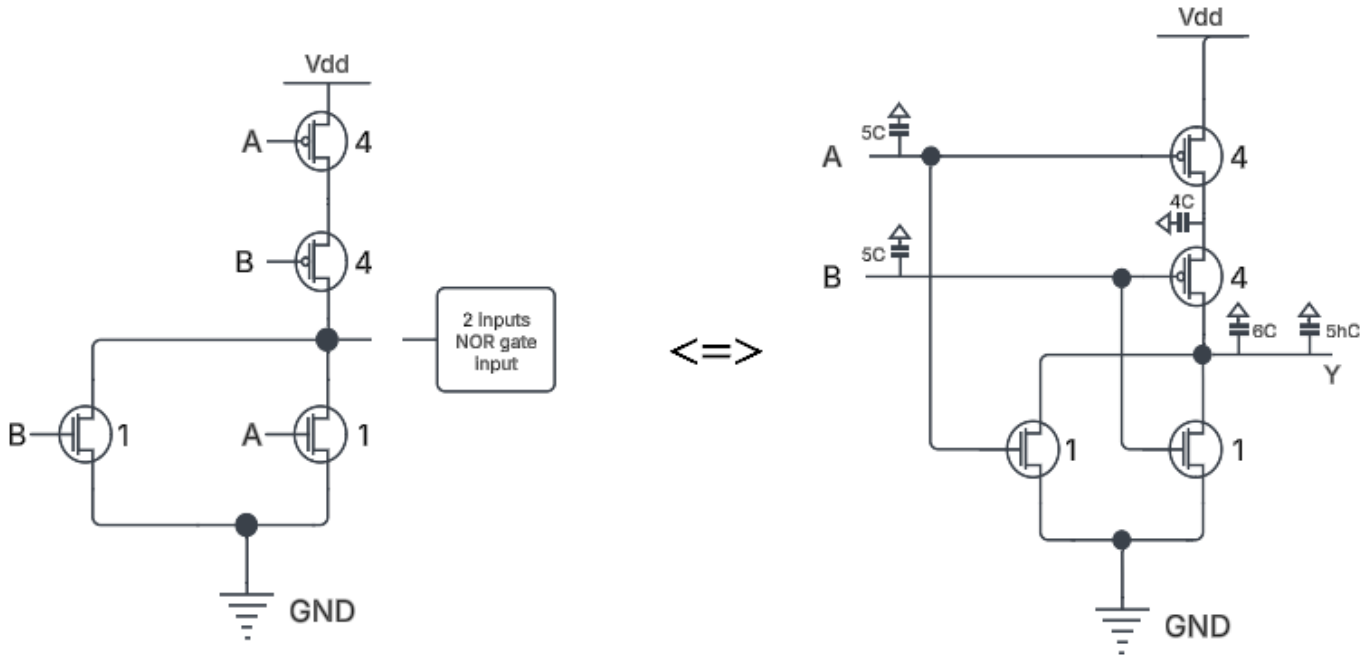

From the above diagram we can derive the following resistor equivalent diagrams to determine rising and falling delay:

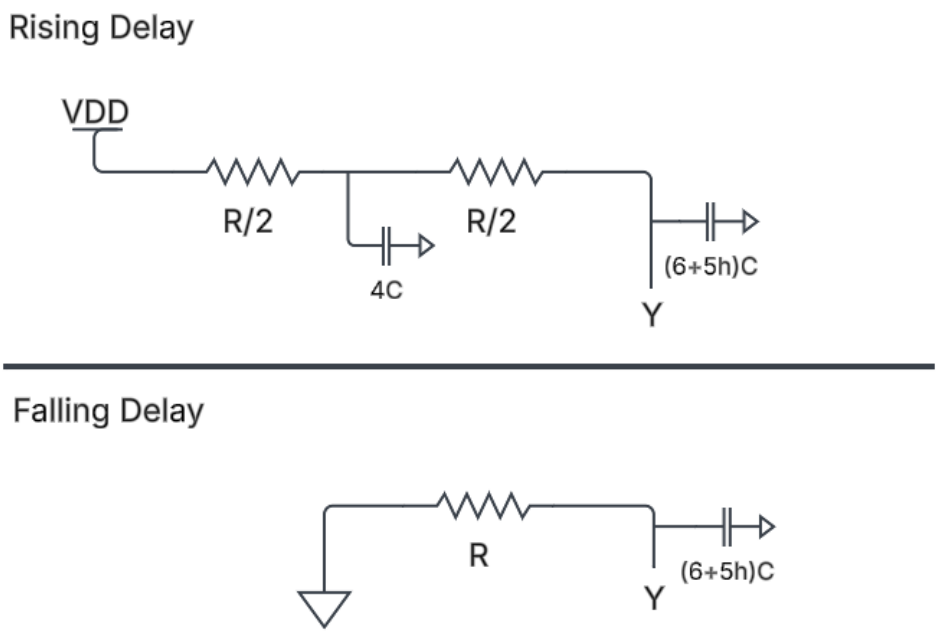

Using RC delay estimation, we derive:

$t_{pdr} = \frac{R}{2}(4C) + \left(\frac{R}{2} + \frac{R}{2}\right)\left((6+5h)C\right) = R(2C) + R\left((6+5h)C\right) = (8+5h)RC$ for rising delay.

$t_{pdf} = (6+5h)RC$ for falling delay.

Exercise 4 – 2 Input NOR gate – Part 2

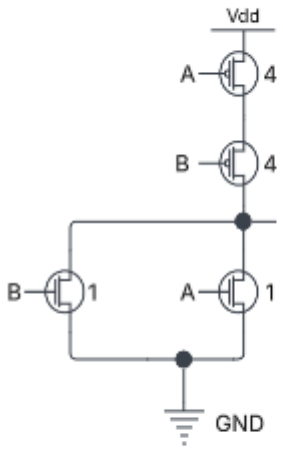

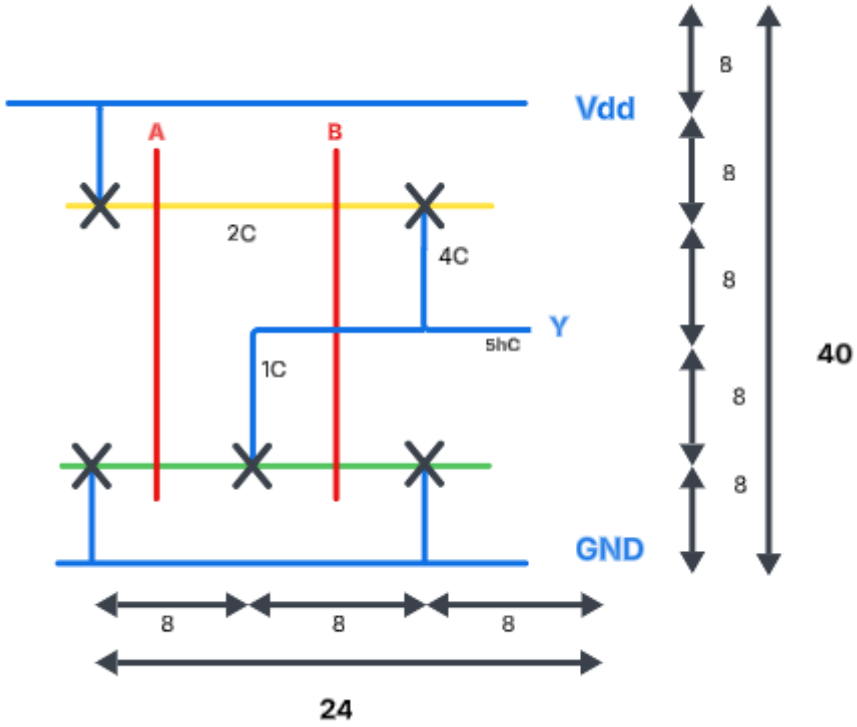

Using the same logic as Exercise 3 and simplifying the 8C capacitance to 2C between the two Pmos and counting only one capacitance for the Nmos, we obtain the following resistor equivalent diagrams from which we can determine rising delay and falling delay:

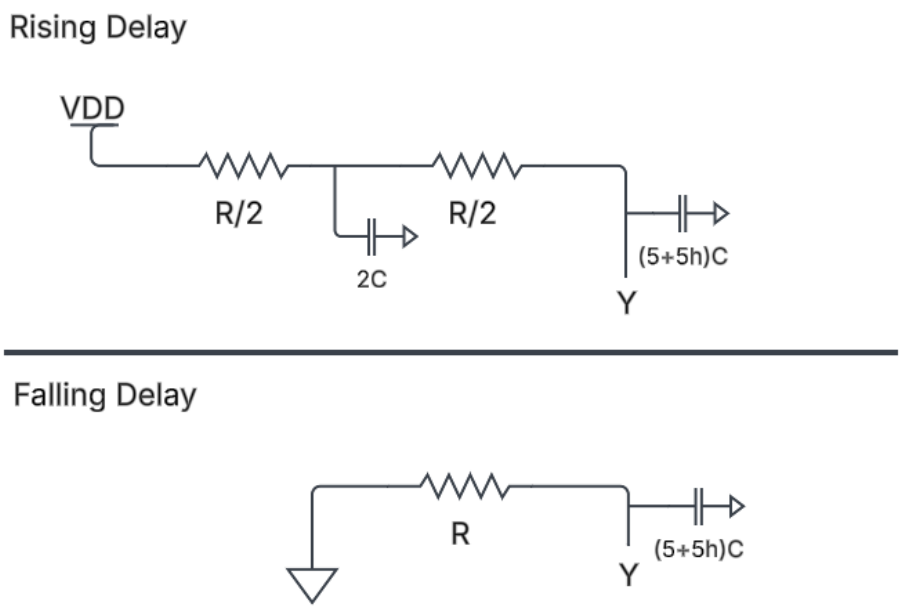

Using RC delay estimation, we derive:

$t_{pdr} = \frac{R}{2}(2C) + \left(\frac{R}{2} + \frac{R}{2}\right)\left((5+5h)C\right) = RC + R\left((5+5h)C\right) = (6+5h)RC$ for rising delay.

$t_{pdf} = (5+5h)RC$ for falling delay.

Exercise 5 –

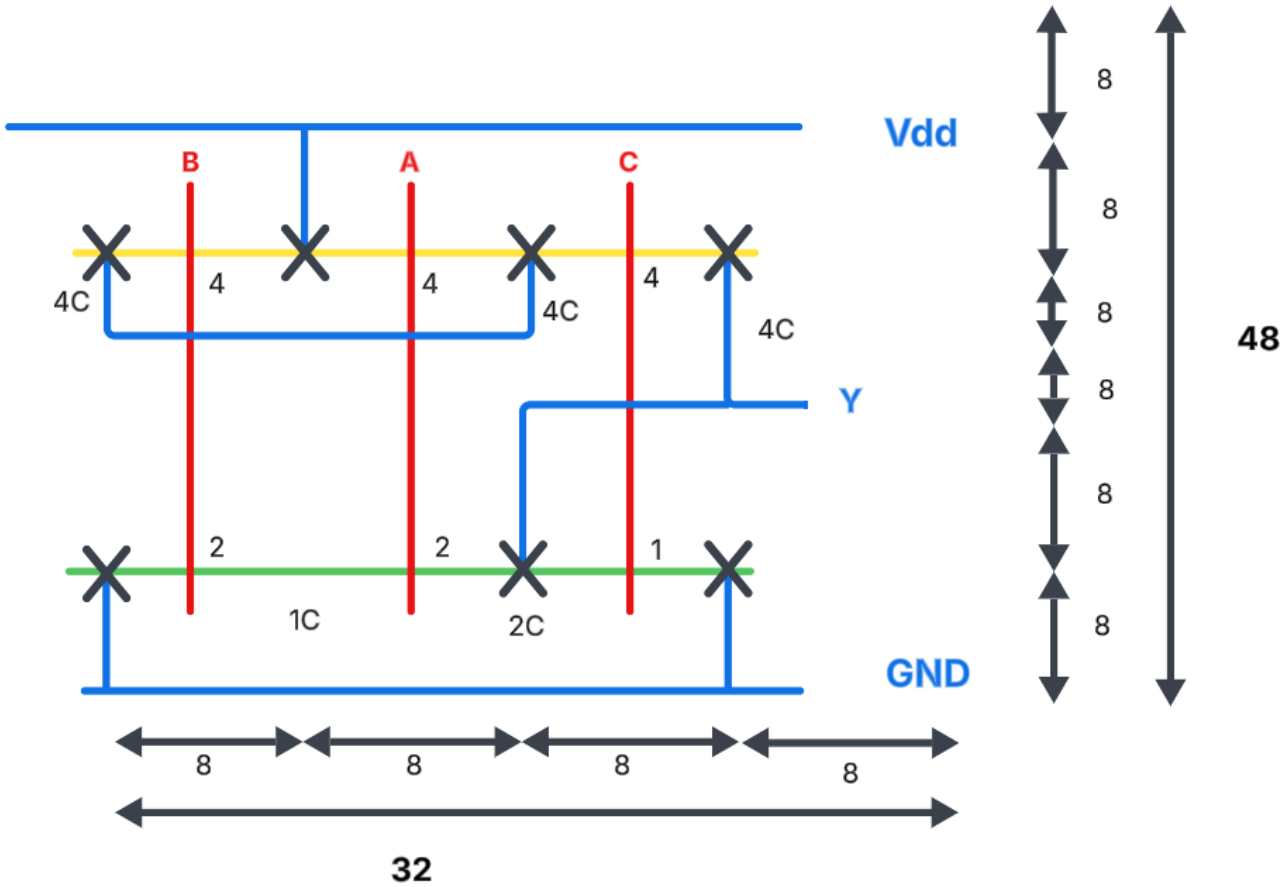

From which we can derive the following falling and rising delay:

$t_{pdr} = \frac{R}{2}(8C) + 6RC \ = \ 10RC$ for rising delay.

$t_{pdf} = \frac{R}{2}C + 6RC \ = \ 6.5RC$ for falling delay.